This product utilizes **R-32** *refrigerant*

Monoblock MTHP Series

INSTALLATION & OWNER'S MANUAL

MODELS:

MDM10115D

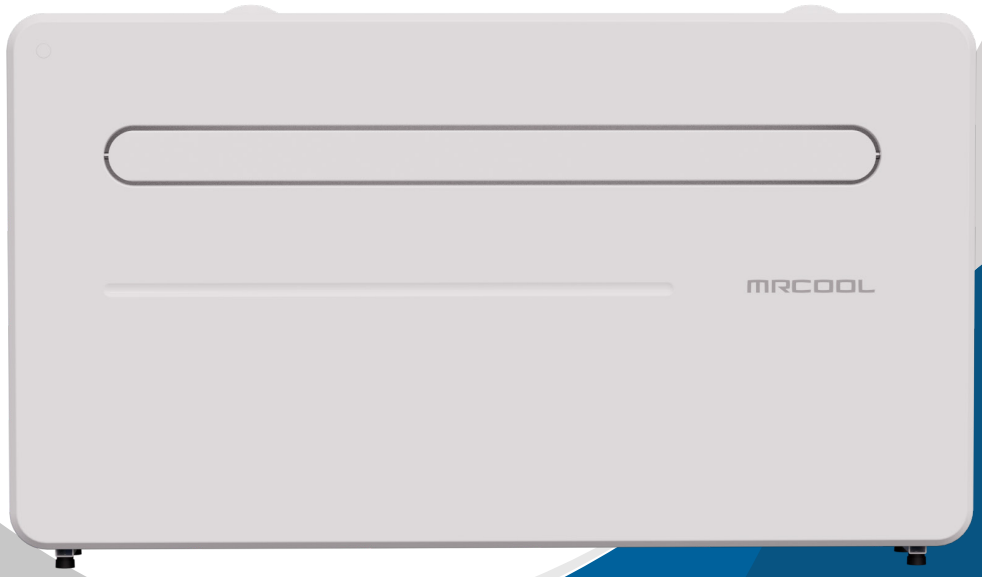

Read this manual carefully before installation and keep it where the operator can easily find it for future reference.

Due to updates and constantly improving performance, the information and instructions within this manual are subject to change without notice.

Version Date: April 14, 2026

Please visit www.mrcool.com/documentation to ensure you have the latest version of this manual.

MRCOOL®
COMFORT MADE SIMPLE

CONTENTS

1 SAFETY 1
2 UNIT OVERVIEW 3
2.1 Features 3
2.2 Packing List 4
2.3 Tools Required 4
2.4 Product Overview 5
3 INSTALLATION 5
3.1 Installation Overview 5
3.2 Installation Location 5
3.3 Drill Wall Opening 6
3.4 Sealing & Mounting 7
4 OPERATION 8
4.1 Controls 8
4.2 Remote 9
5 POST-INSTALLATION 10
5.1 App Connection 10
5.2 Troubleshooting 13
5.3 Error Codes 14

This marking indicates that this product should not be disposed of with other household wastes throughout North America. To prevent possible harm to the environment or human health from uncontrolled waste disposal, recycle it responsibly to promote the sustainable reuse of material resources. To return your used device, please use the return and collection systems or contact the retailer where the product was purchased. They can take this product for environmental-safe recycling.

Safety Precautions

Read Before Using

Incorrect usage may cause serious damage or injury.

The symbols below are used throughout this manual to indicate instructions that should be followed closely or actions that should be avoided to prevent death, injury, and/or property damage.

WARNING — Indicates the possibility of personal injury or loss of life.

CAUTION — Indicates the possibility of property damage or serious consequences.

WARNING FOR PRODUCT INSTALLATION

1. This unit is for indoor use only.
2. This unit must only be connected to a 115V/60Hz grounded outlet.
3. The installation must be in accordance with national and local regulations.
4. If you are in doubt of the suitability of your electrical supply, contact a qualified electrician.
5. This unit has been tested and is safe to use. However, as with any electrical device, take precautions and use with care.
6. Disconnect the power from the appliance before dismantling, assembling, or cleaning.
7. Avoid touching any moving parts of the unit.
8. Do not insert fingers, pencils, or other objects through the guard.
9. This unit is not intended for use by persons (including children) with reduced physical sensory or mental capabilities. It is also not intended for use by those lacking experience and knowledge, unless they have been given proper supervision or instruction concerning the use of the appliance by a person responsible for their safety.
10. Do not leave children unsupervised with this unit.
11. Do not clean the unit by spraying or immersing it in water.
12. Never connect the unit to an electrical outlet using an extension cord. If an outlet is not available, one should be installed by a qualified electrician.
13. Do not operate the unit unless it has been fully installed following the guidance provided within this manual.
14. Never operate this unit if the cord or plug is damaged. Ensure the power cord is not stretched or exposed to sharp objects/edges.
15. If the supply cord is damaged, it must be replaced by MRCOOL®, distributors, or a qualified person to avoid hazards.
16. Any service other than regular cleaning or filter replacement should be performed by qualified personnel. Failure to comply can result in a voided warranty.
17. Do not use the appliance for any purpose other than its intended use.
18. Avoid restarting the unit after a cycle for 3 minutes to prevent damage to the compressor.
19. Never use the main plug as a switch to turn on or turn off the unit. Use the On/Off button located on the control panel.
20. The unit should not be installed in laundry or wet rooms.
21. The unit must be installed in a room without sources of ignition (for example: open flames, an operating gas appliance, or an operating electric heater).
22. The unit must be installed on a solid vertical wall by a licensed technician. The power supply must only be connected after installation is complete.
23. The unit contains about 19.4oz (550g) of R-32, GWP: 675, 0.607 tonnes CO2 equivalent.
24. Do not install or store in an unventilated space with an area smaller than 43ft^2 (4m^2) per unit. The room must meet these requirements to prevent the stagnation of possible refrigerant leaks that pose a danger of fire or explosion if the refrigerant comes into contact with electric heaters, stoves, or other sources of ignition.
25. Refrigerant gas can be odorless.
26. Do not use the unit if damage has occurred which may have compromised the refrigerant system, contact MRCOOL® at 270-366-0457 or at support@mrcool.com.
27. Any repairs or maintenance made on the unit must be carried out by a licensed technician.
28. The refrigerant in the system should not be perforated or punctured.
29. The unit must always be stored and transported upright, otherwise irreparable damage may be caused to the compressor. If in doubt, wait at least 24 hours after installing the unit before operating.
30. Do not lean on the system when secured to the wall.
31. Avoid touching the coils when cleaning the air filter.

2 UNIT OVERVIEW

TIPS

- Do not cover or restrict airflow for the outlet or inlet grilles.
- Keep the filters clean. Under normal conditions filters should only need cleaning once every three weeks (approximately). Since the filters remove airborne particles, more frequent cleaning may be necessary, depending on the air quality.
- For the initial start-up, set the fan speed to maximum and the thermostat to 4-5 degrees lower than the current temperature. After, set the fan speed to low and set the thermostat to your desired temperature.
- Note: Pictures and information may vary regarding the unit in your possession due to continual product improvement.

Symbols Displayed on Unit		
 A2L	**DANGER**	This symbol shows that this appliance uses a flammable refrigerant. If the refrigerant leaks and is exposed to an external ignition source, there is a risk of fire.
	**CAUTION**	This symbol shows the operation manual should be read carefully.
	**CAUTION**	This symbol shows that service personnel should be handling this equipment in reference to the installation manual.
	**CAUTION**	This symbol shows that information is available in the operating or installation manual.

2.1 Features

Designed for effortless integration into your living space, this wall-mounted air conditioner combines a sleek, modern aesthetic with high-performance functionality. Operation is kept simple with a bright LED display that clearly indicates temperature and mode, while the integrated Wi-Fi app control offers expanded customization from your smartphone. To maximize efficiency and comfort, the unit features an energy-saving self-evaporative function, an adjustable On/Off timer, and a silent running option specifically designed for undisturbed sleep. With three fan speeds and four versatile modes—Cooling, Heating, Fan, and Dry—this system provides a comprehensive climate solution tailored to suit your every need.

2.2 Packing List

This system comes with the following accessories. Use all installation parts and accessories when installing the unit. Improper installation may result in water leakage, electrical shock and fire, or cause the equipment to fail. The items that are not included with the air conditioner must be purchased separately.

PART	LOOKS LIKE	QUANTITY
Manual		1
Unit		1
Wall Template	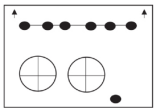	1
Plastic Ducting Sheet	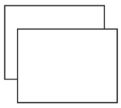	2
Wall Bracket		1
Remote Control		1

PART	LOOKS LIKE	QUANTITY
Vent Cover Assembly		2 (Chain, Indoor Ring, and Outdoor Cover)
Fixed Plate		1
Tapping Screw	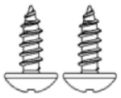	2 (4x10mm)
Screws		7 (5x60mm)
Wall Plugs		7 (8x40mm)
Sealing Strip		1

2.3 Tools Required

PART	LOOKS LIKE
Level	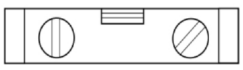
Tape Measure	
Pencil	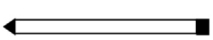
8in (20cm) Core Bit	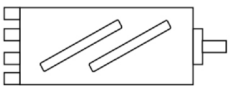

PART	LOOKS LIKE
Drill	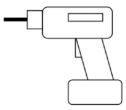
Knife	
5/16in (8mm) Masonry Drill Bit	
1in (25mm) Masonry Drill Bit	

2.4 Product Overview

Front

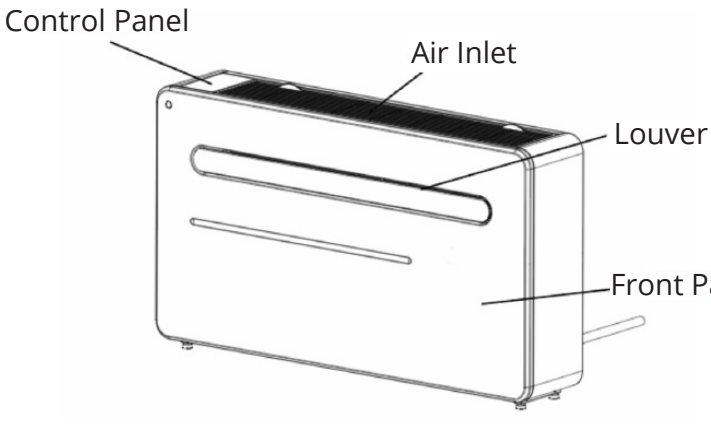

Back

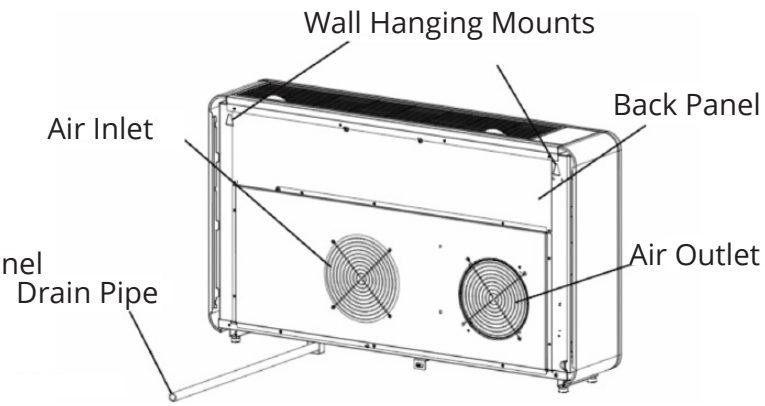

3.1 Installation Overview

Before beginning the installation, please ensure you have all necessary equipment and fully understand the requirements. If you are in doubt, contact a certified technician. The installer must verify that the installation area is suitable and free of cables, pipes, or other obstructions within or on the wall that could present a hazard or prevent the completion of the installation.

3.2 Installation Location

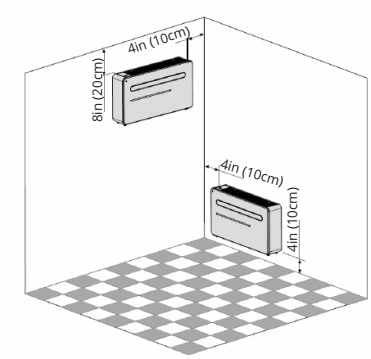

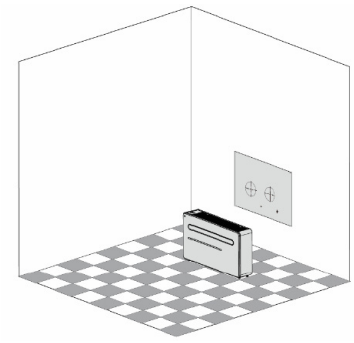

Step 1: Selecting the Location
Identify a suitable location on an exterior wall, as the unit is designed to vent directly out of the rear. The mounting surface must be flat, solid, and capable of supporting the machine's weight reliably over time.

Step 2: Ensuring Proper Clearance
To allow for unrestricted airflow and safe operation, position the unit so that there is a minimum of 4in (10cm) of open space on the left, right, and bottom sides. Additionally, ensure there is at least 8in (20cm) of vertical clearance above the unit.

Step 3: Managing Surroundings
Carefully check the installation area to ensure the unit is not obstructed by or in close proximity to curtains, plants, faucets, furniture, or other household appliances. Proper spacing prevents overheating and protects your belongings from the exhaust.

Step 4: Positioning the Template
Secure the supplied installation template onto the wall in your chosen position. Use a spirit level to verify that the reference line is perfectly level before proceeding with any drilling or mounting.

! CAUTION

Ensure the intake and outlet holes do not line up with the studs in wood-frame housing.

3.3 Drill Wall Opening

Step 1: Drill ventilation holes using an 8in (20cm) core drill to create the two main ventilation holes. Align these with the template and ensure they are drilled at a minimum 5° downward angle toward the exterior to prevent water from entering.

Step 2: Drill the drainage hole for the drain pipe hole using a 1in (25mm) bit. This must also have a minimum 5° downward angle to ensure condensation drains correctly. Note: Best performance is achieved on walls no thicker than 9.5in (240mm).

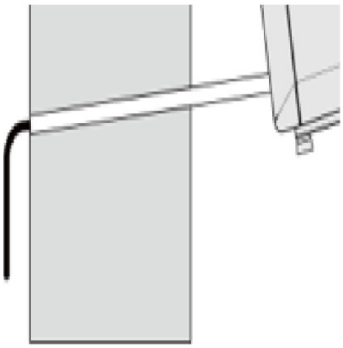

Step 3: Mount the hanging rail and mark the screw positions using the template and a level. Drill holes with a 5/16in (8 mm) bit, insert wall plugs, and secure the rail firmly with the provided screws. Ensure the rail is rock-solid to prevent the unit from tipping.

For wood frame installations, ensure access holes are positioned within the wall cavity. Avoid drilling directly into studs to maintain a clear pathway for routing.

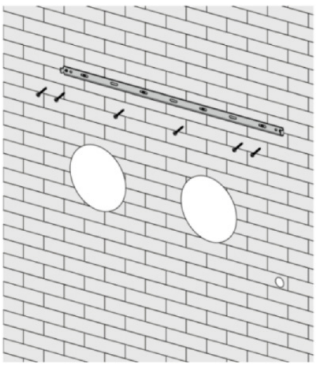

Step 4: Install the vent tubes by rolling the plastic vent sheets into tubes and feeding them into the holes from the inside until they are flush with the interior wall. From the outside, trim any excess tubing with a sharp knife for a neat finish.

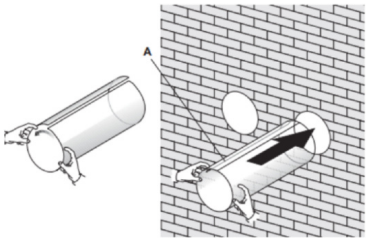

Step 5: Attach the external vent covers into place by placing the indoor fixing ring onto the interior side, folding the external cover in half, attaching the pull-chains to both sides, and sliding them through the hole. Expand the cover outside and pull the chains tight to hook them to the indoor ring. Trim any excess chain.

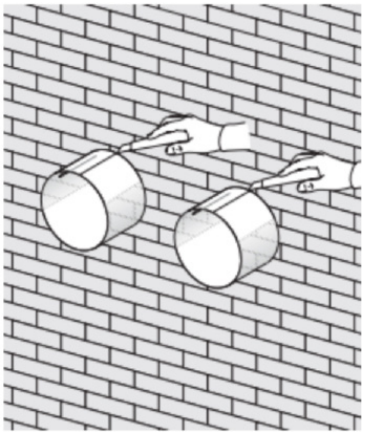

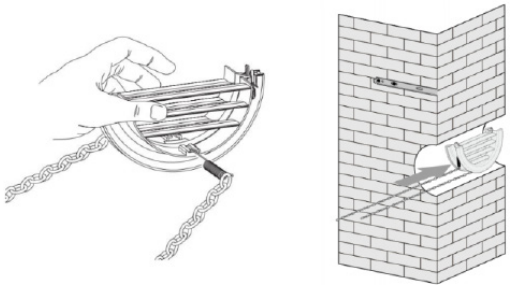

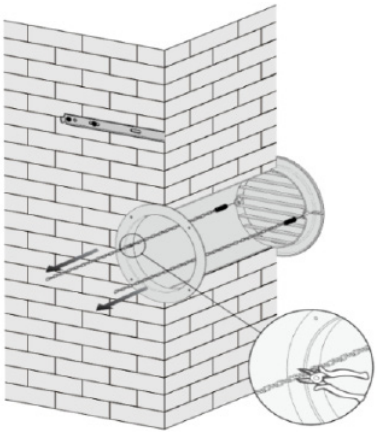

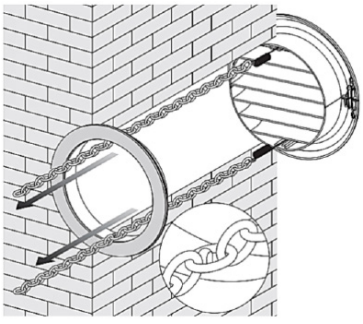

3.4 Sealing & Mounting

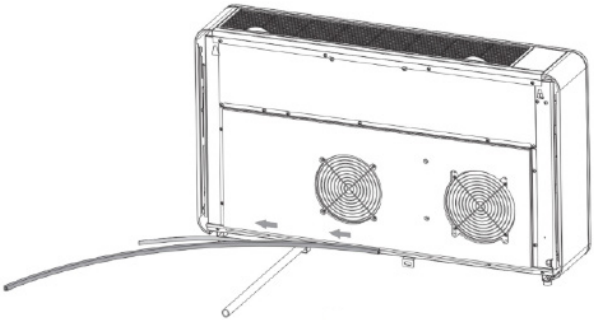

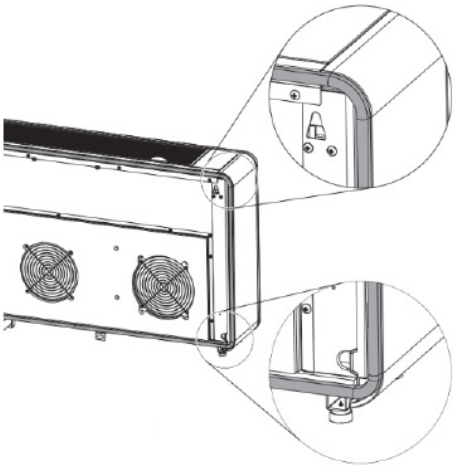

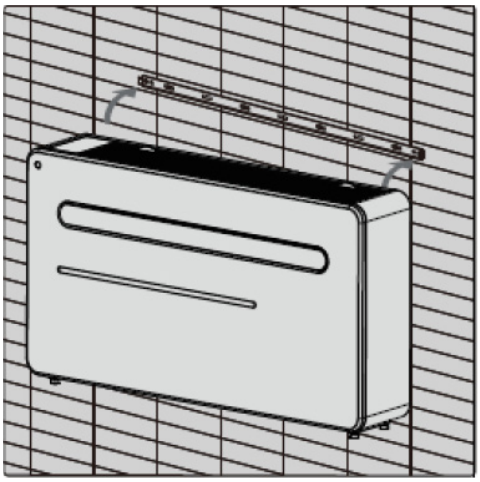

Step 1: Apply the Sealing Strip

- Apply the included adhesive sealing strip along the entire rear edge of the unit to create a full circle and ensure a proper seal to prevent extra noise.
- Begin applying the strip from the bottom of the unit.
- Gradually peel the protective backing layer away while pressing the strip into place.
- Follow the edge of the unit closely and pay special attention to the corners.
- Trim any excess length once the unit is encapsulated.

Step 2: Mount the Unit Carefully

- Lift the unit and align the hanging holes on the back with the hooks on the hanging rail.
- Carefully place the unit into its designated position.
- While lifting, simultaneously slide the drainage pipe through the 1in (25mm) hole that was previously drilled.

Step 3: Secure and Verify

- Wall Contact: Ensure the backside of the product is tightly attached to the wall. A flush fit is required to avoid additional vibration and noise.
- Drainage: The end of the external drainage pipe must be placed in an open space or a dedicated drain. Ensure the pipe is not constricted or damaged so water can flow freely.
- Foot Pads: Note that the rubber foot pads are only intended to protect the bottom of the unit from abrasions prior to installation.

Step 4: Final Clearance Check

- Confirm the unit has the following clearances for optimal airflow.
- Sides and Base: At least 4in (10cm) of open space.
- Top: At least 8in (20cm) of open space.
- Obstructions: Ensure the unit is clear of curtains, plants, faucets, furniture, and other appliances.

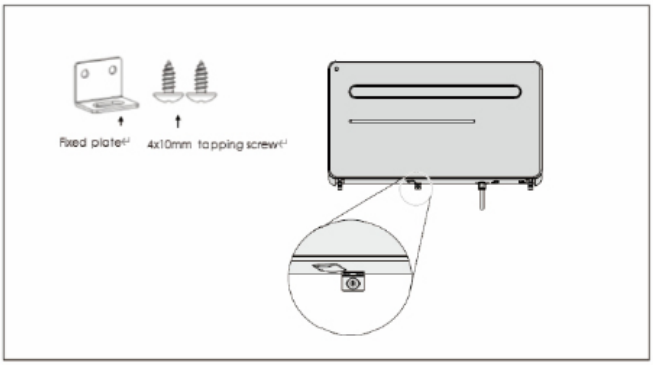

4.1 Controls

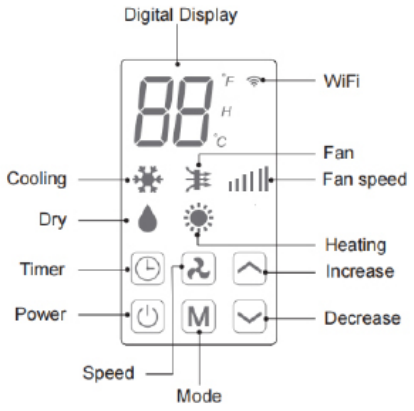

Symbol	Meaning	
	Press "Power" to turn the unit On/Off.	
M	Press to alternate between the 4 different modes. The display will show the symbol for the currently selected mode.	
		The Cooling function allows the air conditioner to cool the room and also reduces air humidity. The desired temperature can be adjusted using the up or down buttons between 60°F (16°C) and 86°F (30°C). The fan speed can also be adjusted using the speed button.
		Dry mode will extract moisture from the air, which will be drained outside using the installed drain pipe. The fan speed cannot be adjusted in Dry mode.
		In fan mode the unit will recirculate the air within the room. It will not cool, heat or dehumidify. The fan speed can be adjusted using the speed button, but the desired temperature cannot be set.
		The Heating function allows the air conditioner to heat the room. The desired temperature can be adjusted using the up or down buttons between 86°F (16°C) and 86°F (30°C). The fan speed can also be adjusted using the speed button.
	SL	Silent mode can be activated from the app or the remote control. It can also be activated by pressing "⏲"+"⌃" on the unit control panel at the same time. It will only operate in cooling or heating modes, and the fan speed will change to low and the noise levels will be lower.
		Press to change the fan speed between Low, Medium and High. The fan speed cannot be adjusted in Dry or Silent modes.

Symbol	Meaning
	The air conditioner contains a 24-hour timer, which can be used to either set a delayed start or a set period of operation.
	SHUTDOWN TIMER: While the unit is running, press the Timer button and the display will flash “0” 5 times. After the 5th flash, use the up and down buttons to adjust the duration in 1-hour increments between 1 to 24 hours. When the timer has elapsed, the unit will shutdown automatically.
	DELAYED START TIMER: With the unit is in standby, press the Timer button and the display will flash “0” 5 times. After the 5th flash, use the up and down buttons to adjust the duration in 1-hour increments between 1 to 24 hours. After the timer has elapsed, the unit will start up in the same mode with the same settings as when it was turned off.
	Used within Cooling and Heating modes to adjust the desired temperature 60°F-86°F (16°C-30°C). Also use while setting the timer to adjust the duration.
Swing Mode	After the machine turns on, press the “SWING” button and the louver will swing continuously up and down; by pressing the button again, the movement will stop and the louver will remain in that position. Swing mode can only be adjusted from the remote, and will initially be turned on by default. The louver will close automatically once switch OFF the unit.
Compressor Protection	There is a 3-minute delay when powered on. In order to protect the life of the compressor and electronic components, please do not switch on the unit for at least 5 minutes after you have turned the unit off.

4.2 Remote

The unit can be controlled with the remote control. Two AAA-batteries are required.

Symbol	Meaning
Power	Press the POWER button to turn the machine On/Off.
Mode	Press the MODE button to switch between Cooling, Heating, Fan, and Dry modes.
Fan	Press the FAN button to change between High, Medium. and Low fan speeds
LED	Press the LED button to turn the display lights on or off. This can be useful when sleeping.
	Press the UP button to increase the desired temperature or timer duration.
	Press the DOWN button to decrease the desired temperature or timer duration
Silent	Press for Silent mode. In Silent mode, noise will be lower, frequency is low , and the fan works in low speed.
Swing	Press to turn the louver swing function On/Off (only activated by the remote control & app)
Timer	Press the TIMER button to set the automatic switch On/Off.

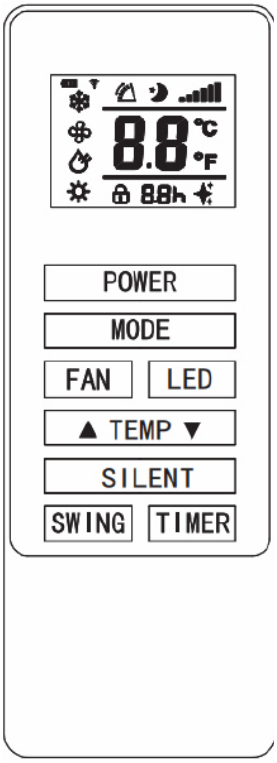

5.1 App Connection

Before Starting Connection be Aware of the Following:

- Ensure your router provides a standard 2.4ghz connection.
- If your router is dual band ensure that both networks have different network names (SSID). The provider of your router/internet service provider will be able to provide advice specific to your router.
- Try to have the router as close to the unit as possible during setup.
- Once your phone is connected to your router via WiFi, download the "MRCOOL® Connect" app to your phone through the app store.

Register the App:

If you do not have an app account, register an account or sign in with a verification code by Email. The following steps describe the registration process.

1. Press on the "Sign Up" button at the bottom of the screen.
2. The system will automatically recognize your country/area. You can also select your country code manually. Enter you email address and tap "Get Verification Code".
3. If you choose the mobile number option, enter the verification code in the message that was sent to you by email. Set a password as prompted and press "Done" to finish your registration.

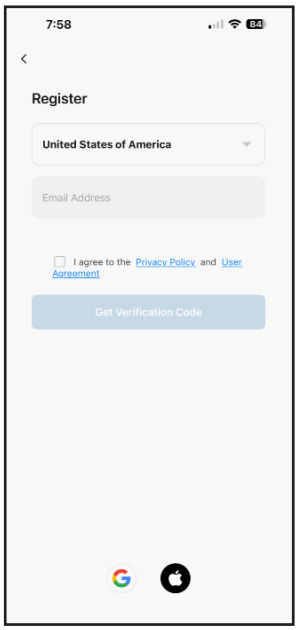



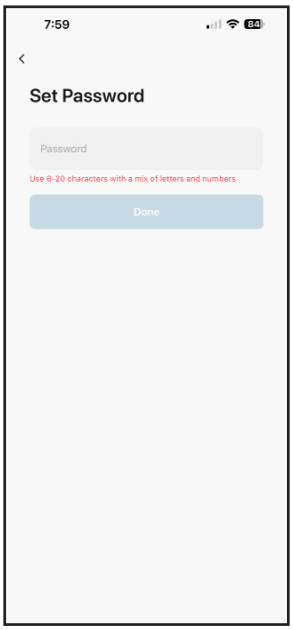

5 POST-INSTALLATION

Connecting Using Bluetooth:

1. Before initiating the connection, make sure the unit is in standby mode.
2. Press the "Fan" button for 3 seconds, you will hear a chime and the WiFi indicator will flash.
3. Turn on and open the Bluetooth function on your phone to be able to pair to the unit.
4. When the device is powered on and ready to be connected, the connected Bluetooth device will show automatically after opening the app. Click the "Add" button for connection.
5. Enter the WiFi information interface, then enter the password and click "Next" to continue.

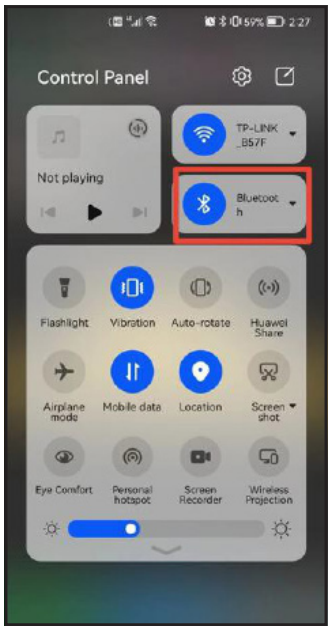

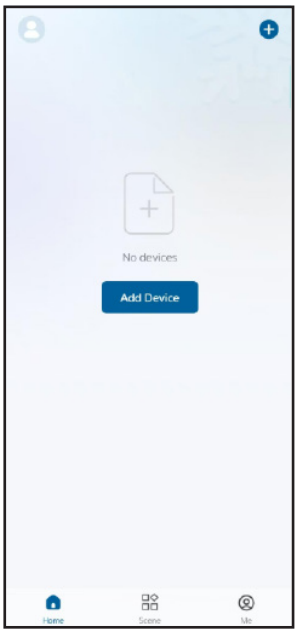

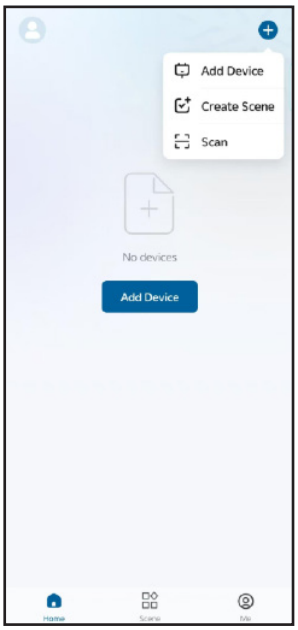





6. Enter the device connection interface after the progress bar is finished and the device will be connected successfully.

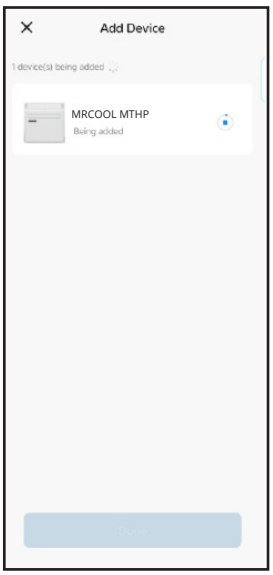

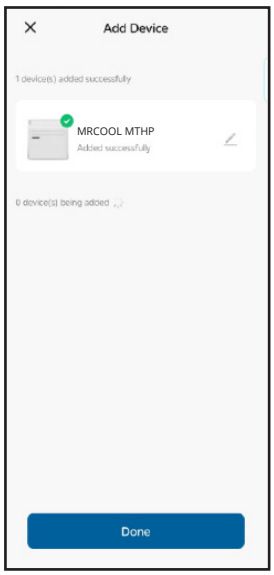



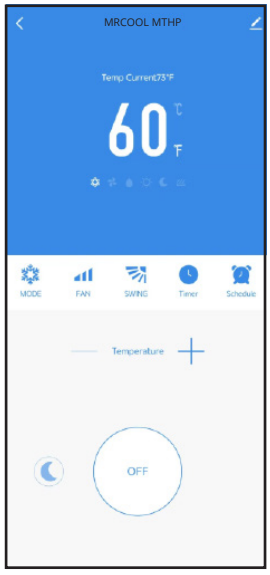

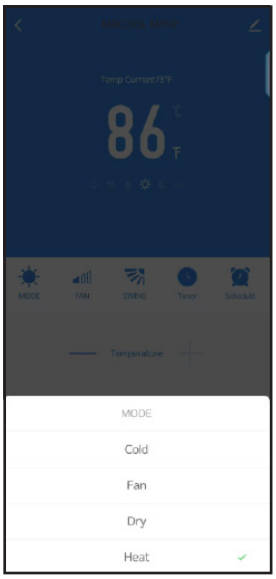

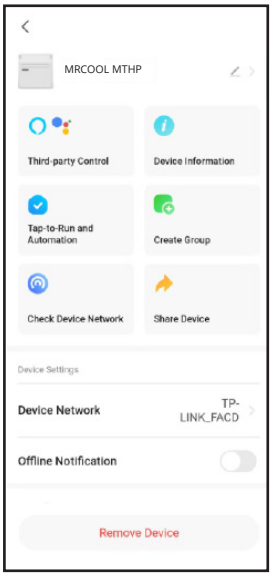

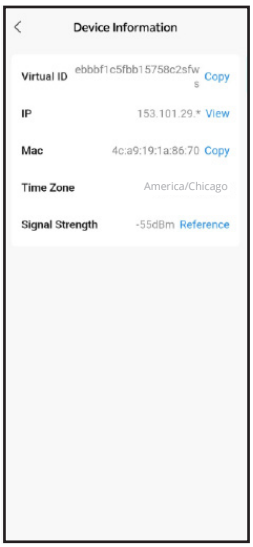

5.2 Troubleshooting

Issue	Possible Causes	Solutions
The unit does not work	There is no power.	Check that the unit is plugged in and the outlet has power.
	The ambient temperature is too low/high.	Only use the unit in a room with a temperature between 45°F~95°F (7°C~35°C).
	In Cooling mode, the room temperature is lower than the desired temperature. In Heating mode, the room temperature is higher than the desired temperature.	Adjust to the desired set point.
	In dehumidification (Dry) mode, the ambient temperature is low.	Make sure that the room temperature is above 63°F (17°C).
	There is direct sunlight.	Use curtains to reduce heat exposure from the sun.
The cooling or heating performance is poor	Doors or windows are open; there are a lot of people in the space; or in Cooling mode, there are other sources of heat.	Close doors and windows.
	The filter is dirty.	Clean the filter.
	The air inlet or outlet is blocked.	Clear obstructions; make sure the unit is installed as per the instructions.
The unit is leaking	The unit is not straight.	Use a level to check that the unit is horizontal. If not, remove the unit from the wall and straighten.
	The drain pipe is blocked.	Check the drain pipe to ensure that it is not blocked or constricted.
The compressor is not working	Overheat protection is operating.	Wait for 3 minutes until the temperature has lowered, then restart the machine.
The remote control is not working	The remote control is not aligned with the direction of the remote control receiver.	Move the remote control closer to the unit and make sure that the remote directly faces the units remote control receiver.
	Dead batteries.	Replace the batteries.

Note: If the recommended solutions do not work, please contact a technician or MRCOOL® at 270-366-0457 or at support@mrcool.com

5.3 Error Codes

Fault Code	Description	Fault Code	Description
F1	Compressor IPM error	P8	Zero-crossing fault detection (indoor)
F2	PFC/IPM error	PA	Return air sensor temperature abnormal protection
F3	Compressor start error	PC	Coil tube overload protection (outdoor)
F4	Compressor running out of step	PE	Abnormal refrigerant circulation
F5	Location detection loop failure	PH	Exhaust temperature protection
F6	PCB communication error	E0	Sensor on suction pipe error
F7	Coil sensor error (outdoor)	E1	Temperature sensor error (indoor)
F8	Sensor on suction pipe error	E2	Sensor error on indoor coil tube
FA	Phase current overcurrent protection	E3	DC fan feedback failure (indoor)
FE	EE error (outdoor)	E4	Communication error
FL	Water-full protection	E5	Water-splash motor error
P1	Overheat protection on top of the compressor	E6	Temperature sensor error (outdoor)
P2	DC bus voltage undervoltage protection	E7	Fan motor error (outdoor)
P3	AC input voltage protection	E8	Fan feedback fault
P4	AC overcurrent	EE	EE error (indoor)
P5	AC undervoltage protection	EA	Reversing valve fault
P6	Coil tube overload protection (indoor)	Eb	Fluoride deficiency protection
P7	Defrost protection on coil tube (indoor)		



Monoblock MTHP Series

The design and specifications of this product and/or manual are subject to change without prior notice.
Consult with the sales agency or manufacturer for details.