ENGLISH

FORNO®
Espresso

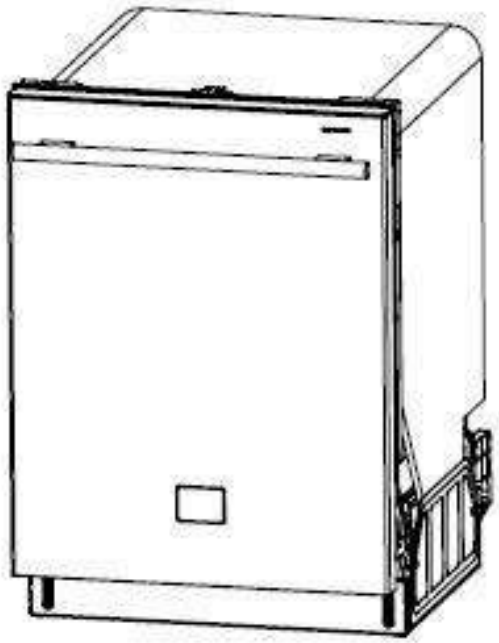

DISHWASHER
MODEL NUMBER SERIES:

FDWBI8072-24BLK
FDWBI8072-24WHT

c UL us
LISTED
E543101

INSTRUCTION MANUAL

Read these instructions carefully before using your appliance, and keep it carefully.
If you follow the instructions, your appliance wil provide you with many years of good service.

6/2026

TABLE OF CONTENTS

Customer Care	4
Warning	5
Important Safety Instructions	7
Product Dimension	10
Names of Parts and Accessories	11
Installation Instructions	14
Overview of Programs	25
Using Rinse Aid	27
Loading Utensils	28
Adding Detergent	31
Maintenance and Cleaning	32
Troubleshooting	34
Warranty	37

Customer Care

Thank you for purchasing a Forno product. Please read the entire instruction manual before operating your new appliance for the first time. Whether you are an occasional user or an expert, it will be beneficial to familiarize yourself with the safety practices, features, operation and care recommendations of your appliance.

Both the model and serial number are listed inside the product. For warranty purposes, you will also need the date of purchase .

Record this information below for future reference.

Product Information

Model Number : _____

Serial Number :

Date of Purchase :_____

Purchase Address And Phone : _____

_____

_____

Service Information

Use these numbers in any correspondence or services calls concerning your product.

If you received a damaged product, immediately contact Forno.

To save time and money, before you call for serviced, check the troubleshooting guide. It listed the causes of minor operation problems that you can correct yourself.

“Need some quick help? Simply scan the qr code and get access to our fast support form. We’re always here to assist you with any questions or concerns you may have. So, don’t hesitate to reach out!”

Services in Canada and Untied States

Keep the instruction manual handy to answer your questions. If you don’t understand something or need more assistance, please visit our website for fast support. Please provide us your name, number, address,serial number of the product that troubleshooting, proof of purchase, and a short description of the issue. A customer service representative will contact you as soon as possible. All warranty work needs to be authorized by FORNO customer service. All our authorized service providers are carefully selected and rigorously trained by us.

Important Safety Instructions

Your dishwasher has been carefully designed to operate safely during normal dishwashing procedures. Please keep the following instructions in mind when you are using your dishwasher.

WARNING

To reduce the risk of electric shock, fire, or injury to persons, the installer must ensure that the dishwasher is completely enclosed at the time of installation
Safety Instruction:
The instructions pertaining to a risk of fire, electric shock, cor injury to persons shall warn the user of the potential risks and state the precautions that should be taken to reduce such risks.

WARNING **IMPORTANT SAFETY INSTRUCTIONS**

When using your dishwasher, follow basic precautions, including the following:

- To reduce the risk of electric shock, fire, or injury to persons, the installer must ensure that the dishwasher is completely enclosed at the time of installation.
- This appliance must be connected to a grounded metal, permanent wiring system, or an equipment-grounding conductor must be run with the circuit conductors and connected to the equipment-grounding terminal or lead on the appliance.
- Read all instructions before using the dishwasher.
- Keep this instruction manual in a safe place for future reference. If the appliance is sold, given away or moved, please ensure the manual is kept with the machine, so that the new owner may benefit from the advice contained within it.
- Use the dishwasher only for its intended function.
- Use only detergents or wetting agents recommended for use in ca dishwasher and keep them out of the reach of children.
- When loading items to be washed:

1) Locate sharp items so that they are not likely to damage thee door seal;
2) Load sharp knives with the handles up to reduce the risk of cut-type injuries.

- Do not wash plastic items unless they are marked "dishwasher safe" or the equivalent. For plastic items not so marked, check the manufacturer's recommendations.
- Do not touch the heating element during or immediately after use.
- Do not operate your dishwasher unless all enclosure panels are properly in place.
- If the appliance must be moved at any time, keep it in an upright position; if absolutely necessary, it may be tilted onto its back.
- Do not tamper with controls.
- Do not abuse, sit on, or stand on the door or dish rack of the dishwasher.
- To reduce the risk of injury, do not allow children to play in or on a dishwasher.
- Do not lean on the adjustable racks or use them to support your body weight.
- Some dishwasher detergents are strongly alkaline. They can be extremely dangerous if swallowed. Avoid contact with the skin and eyes and keep children away from the dishwasher when the door is open. Check that the detergent receptacle is empty after completion of the wash cycle.
- Under certain conditions, hydrogen gas might be produced in a hot-water system that has not been used for two weeks or more. HYDROGEN GAS IS EXPLOSIVE. If the hot-water system has not been used for such a period, before using the dishwasher turn on all hot-water faucets and let the water flow from each for several minutes. This will release any accumulated hydrogen gas. As the gas is flammable, do not smoke or use an open flame during this time.
- Remove the door to the washing compartment when removing an old dishwasher from service or discarding it.

SAVE THESE INSTRUCTIONS

WARNING **CUT HAZARD**

Take care panel edges are sharp.
Failure to use caution could result in injury or cut.

WARNING **INSTALLATION SAFETY INSTRUCTIONS**

- Connect to a properly rated, protected, and sized power circuit to avoid electrical over load.
- To reduce the risk of severe injury or death, follow all installation instructions.
- The appliance must be installed and electrically grounded by qualified service personnel in accordance with local codes.
- Disconnect the power supply line, house fuse or circuit breaker before installing or servicing the appliance.
- When moving or installing the product in a different location, call qualified service person-nel for installation and service.
- Keep packing materials out of the reach of children. Packaging material can be dangerous for children. There is a risk of suffocation.
- Moving or installation of the appliance requires two or more people.
- This appliance is not designed for maritime use or for mobile installations such as in Rvs, trailers, or aircraft.

Important Safety Instructions

- Store and install the appliance where it will not be exposed to temperatures below freezing or exposed to outdoor weather conditions.
- This appliance must be positioned near to an electrical power supply.
- Do not, under any circumstances, cut or remove the ground from the power supply line.
- Check the dishwasher by placing it so that its sides or back panel are in contact with the adjacent cabinets or even with the wall. This appliance can also be recessed under a single table top.
- Position the dishwasher on a level and sturdy floor. If the floor is uneven, the front feet of the appliance may be adjusted until it reaches a horizontal position (the angle of inclination must not exceed 2 degrees). If the appliance is leveled correctly, it will be more stable and much less likely to move or cause vibrations and noise while it is operation.
- Connection to the water and electricity supplies should only be performed by a qualified technician.
- The dishwasher should not stand on top of the water hoses or the electricity supply cable.
- The appliance must be connected to the water supply network using new piping. Do not use old piping.

⚠ WARNING **OPERATIONAL SAFETY INSTRUCTIONS**

- Never unplug the appliance by pulling on the power supply line.
- Do not use an extension cable or adapter with this appliance.
- Do not grasp the power supply line or touch the appliance controls with wet hands.
- Do not store or use gasoline or other flammable vapors and liquids in the vicinity of this or any other appliance.
- Do not modify or extend the power cable.
- Keep the area underneath and around your appliances free of combustible materials (lint, paper, rag etc.), gasoline, chemicals and other flammable vapors and liquids.
- This appliance is not intended for use by persons (including children) with reduced physical, sensory or mental capabilities, or lack of experience and knowledge, unless they have been given supervision or instruction concerning the use of thee appliance by a person responsible for their safety.
- In the event of a gas leak (propane gas, LP gas, etc.) do not operate this or any other appliance. Open a window or door to ventilate the area immediately.
- Fix the drain hose securely in place.
- Do not let children eat detergent or dishwasher rinse agent.
- Do not install or store the dishwasher where it will be expoosed to weather conditions.
- After cleaning the dishes, turn off the water supply. Before cleaning, turn the water supply back on and check the connections.
- Be careful not to catch your hand when closing the door of the product.
- Do not plug the dishwasher into a damaged outlet.
- Do not install or keep the dishwasher near electrical components or exposed flames.
- Do not wash dishes exposed to gasoline, solvents or other flammable materials.
- When cleaning, do not spray water on the product directly.
- Do not press buttons with a sharp object such as an awl or pin.
- Open the door very carefully if the dishwasher is in operation. There is a risk of being sprayed with hot water. Do not open the door fully until the spray arms have stopped rotating.
- The door should not be left in the open position as this could present a tripping hazard.
- The water inside the dishwasher is not suitable for drinking.
- The dishwasher must be used with the filter plate, drain filter and spray arm(s) I place.
- Do not operate this dishwasher if it is damaged, malfunctioning, partially disassembled or has missing or broken parts, including a damaged power supply cord or plug.
- Household appliances are not intended to be played with by children. Children of less than8 years old must be kept away from the appliance unless continuously supervised. This appliance can be used by children aged from 8 years and above, and persons with reduced physical, sensory or mental capabilities or lack of experience and knowledge, if they have been given supervision or instruction concerning the use of the appliance in a safe way and they understand the hazards involved.
- Cleaning and user maintenance shall not be done by children without supervision.
- If a dishwasher cleaner is used, we would strongly recommend a wash program with detergent should be run immediately afterward, to prevent any damage to the dishwasher.
- The dishwasher is designed for washing normal household utensils. Items that are contaminated by petrol, paint, steel or iron debris, corrosive, acidic cor alkaline chemicals are not to be washed in the dishwasher.
- If the dishwasher is not being used for long periods of time, turn the electricity and water supply to the dishwasher off.

WARNING MAINTENANCE SAFETY INSTRUCTIONS

- Repair or immediately replace all power supply lines that have become frayed or otherwise damaged. Do not use a power supply line that shows cracks or abrasion damage along its length or at either end.
- Disconnect the appliance from the power supply before any cleaning or maintenance.
- When disconnecting the appliance, pull the plug rather than the power supply cord or junction of cord to avoid damage.
- Do not repair or replace any part of the appliance or attempt any servicing unless specifically recommended in this user guide.
- Keep the floor around your appliance clean and dry to reduce thee possibility of slipping.
- Keep the area around/underneath your appliance free from the accumulation of combustible materials, such as lint, paper, rags and chemicals.

CAUTION

To reduce the risk of minor or moderate injury to persons, malfunction or damage to the product or property when using this product, follow basic precautions, including the following:

Installation

- Install the product on a firm and level floor.
- This dishwasher must be connected to a hot water supply with a temperature range between 120 °F(49 °C) and 149 F(65 °C).This temperature range provides the best washing results and shortest cycle time. The temperature should not exceed149 F (65°C) to prevent damage to dishes.
- Do not put the drain hose under the dishwasher during installation.

Operation

- Do not place objects on top of the appliance.
- Turn off the water faucets and unplug the appliance if the appliance is to be left for an extended period of time, such as during vacations.
- Do not store or spill liquid detergents, cleaners, or bleaches(cchlorine bleach, oxygen bleach) on the appliance. Doing so may result in corrosion, discoloration or damage to the surface of the appliance.
- Do not touch draining water which may be hot.
- If the drain hose and the water supply hose are frozen in winter, defrost before using the dishwasher.
- Do not put hands, feet, or metal objects below or behind thee appliance.

Maintenance

- If cooking oil is spilled on the exterior of the product, wipe it off immediately. Do not clean the exterior of the product with cleaners which contain alcohol, thinners, bleach, benzene, flammable liquids, or abrasives. These substances may discolor or damage the appliance.

Product Dimension

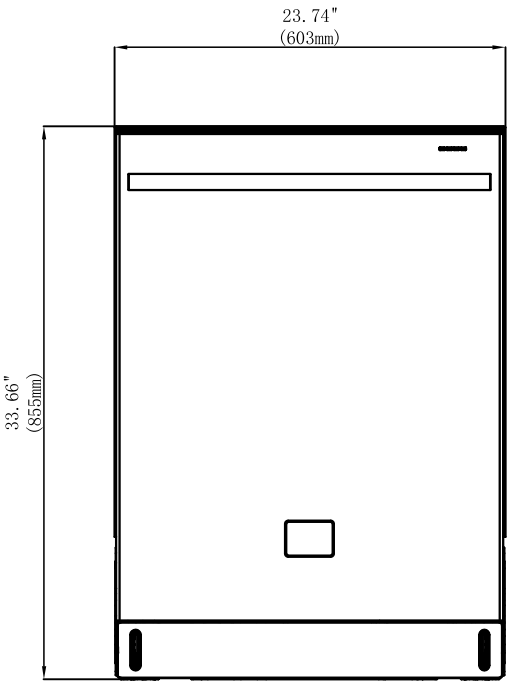

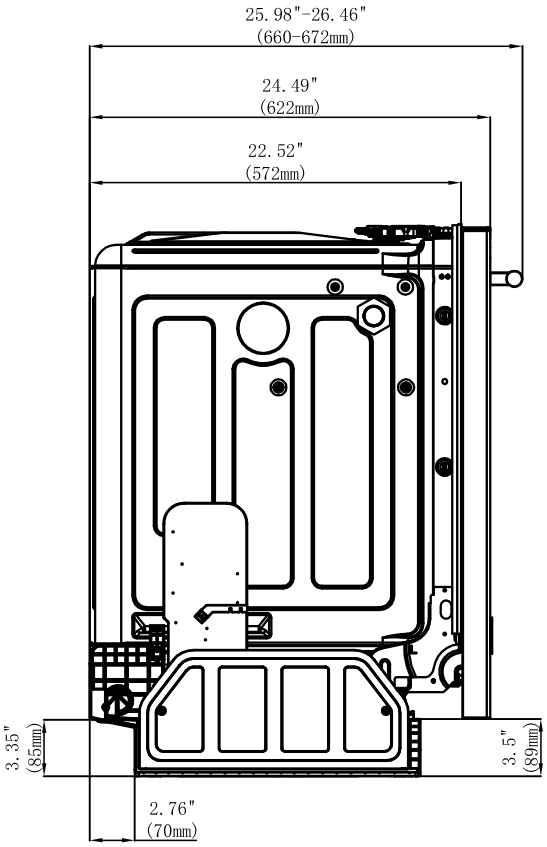

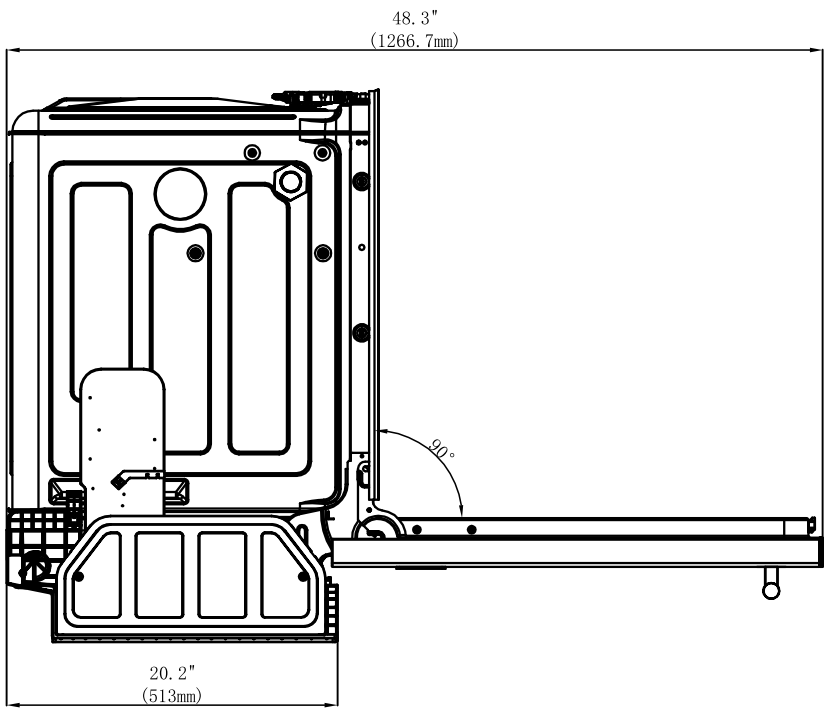

Names of Parts and Accessories

Product Features

The images in this guide may be different from the actual components and accessories, which are subject to change by the manufacturer without prior cover. notice for product improvement purposes.

NOTE

- For your safety and for extended product life, use only authorized components. The manufacturer is not responsible for product malfunction or accidents caused by the use of separately purchased unauthorized components or parts.
- Do not remove the safety cover at any time.
- To ensure reliability, each dishwasher goes through thorough quality control before it leaves the factory.
- You may find water droplets or water spots from this process inside your new dishwasher.

Front view

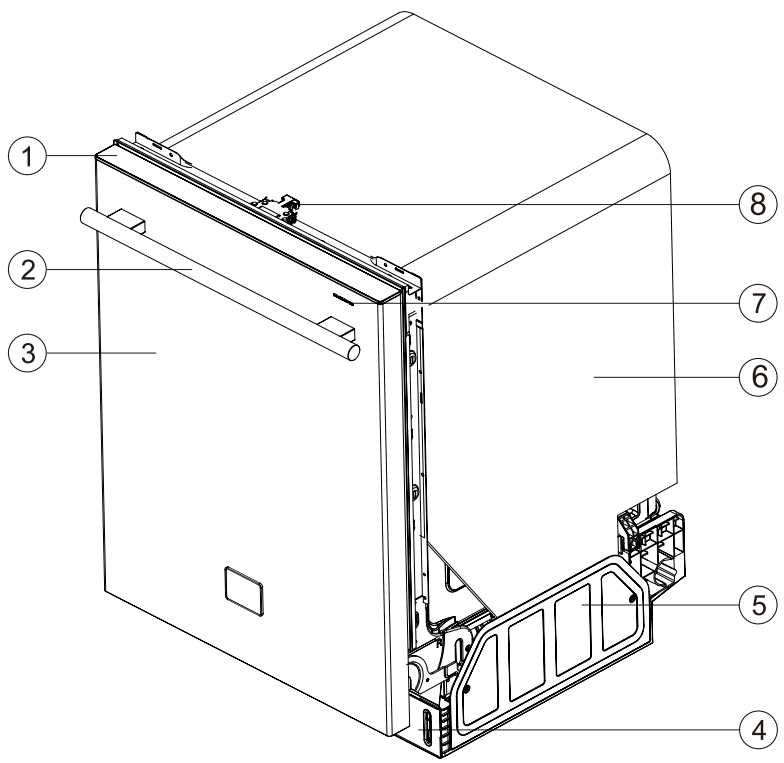

① Control Panel

② Door Handle

③ Outer Door

④ Lower Cover

⑤ Side Shield

⑥ Insulation

⑦ Progress Indicator

⑧ Door Lock

Progress indicator

1	2	3	4

The top-control models have 4 indicator LEDS centered at the top of the front cover.

1. WASHING: When the dishwasher is WASHING the load, the WASHING light will illuminate.
2. DRYING: When the dishwasher is at drying stage, the DRYING light will illuminate.
3. CLEAN: After the cycle has ended, the CLEAN light will illuminate until the dishwasher door has been opened.
4. SANITIZED: When SANITIZED is selected, the SANITIZED light will illuminate after the cycle has ended.

Names of Parts and Accessories

Interior view

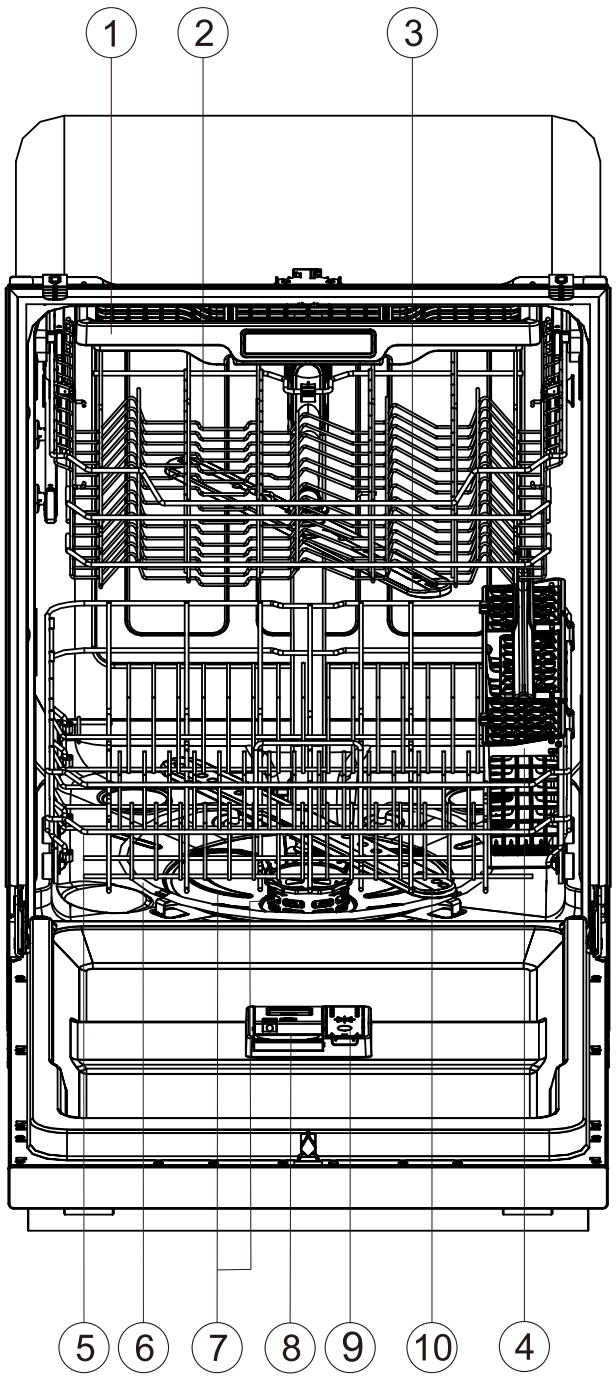

① Top cutlery basket

② Upper basket

③ Upper spray arm

④Cutlery basket

⑤ Lower basket

⑥ Heater

⑦ Filters

⑧ Detergent dispenser

⑨ Rinse aid dispenser

⑩ Lower spray arm

NOTE

Remove all packing materials from the exterior and interior of the dishwasher before installing the appliance.

Product Specifications

The appearance and specifications listed in this manual may vary due to constant product improvements.

Item	Specifications
Voltage	120 V
Frequency	60 Hz
Ampere	8.6 A
Water Pressure	20-120 psi (138-827 kPa)
Dimensions (Width X Depth X Height)	23 3/4" X 24 9/16" X 33 11/16" (603mm X 624mm X 855mm)
Inlet Water Temperature	120-149°F 49-65°C

Accessories

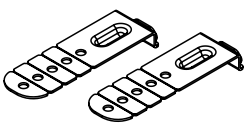

Installation Brackets (2)

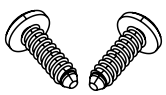

Wood Screws (2)



Anti Steam Sticker

Electrical diagram

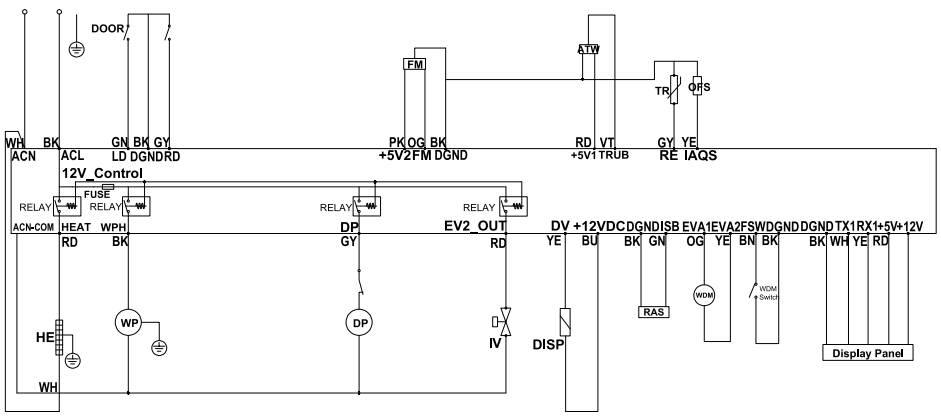

RD	BK	BU	WH	YE	PK	VT	OG	BN	GY
Red	Black	Blue	White	Yellow	Pink	Violet	Orange	Brown	Gray

CODE	Name
DISP	Dispenser
DOOR	Door Switch
DP	Drain Pump
FM	Flow Meter
HE	Heating Element
IV	Inlet Valve
OFS	Overflow Sensor
RAS	Rinse-Aid Sensor
TR	Thermal Rezistor
WP	Washing Pump
ATW	Turbidity Sensor Feedback Signal
WDM	Water Divertor Motor

Installation Instructions

Unpacking and handling

- Check packaging and dishwasher for signs of transport damage. If the dishwasher is in any way damaged, do not install it. Contact the dealer the dishwasher was purchased from.
- Disposal of packaging: some of the packaging is recyclable. (Check the symbols and labels and recycle if possible.
- Never lift the dishwasher from the door handle or the top panel. Doing so may cause damage.
- Be careful with the hose behind the dishwasher. Careful handling will prevent damage and malfunction from squashing, kinking or cuts.
- While installing the dishwasher, check the drain hose is not restricted or kinked.
- Check that the hoses are long enough to reach the services. If a hose needs extending ensure that the extension hose is new and of equal quality and diameter to the one already fitted.

Parts not Provided

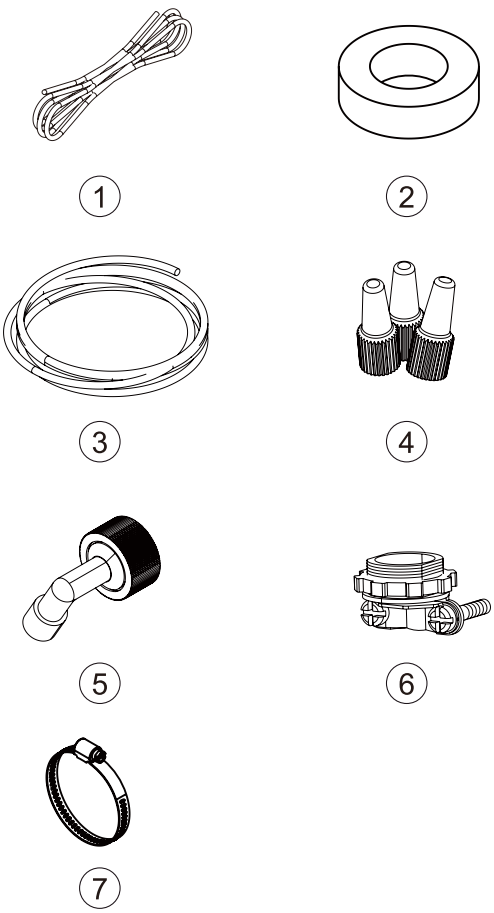

① Electrical Cable

② Electrical Tape

③ Water Supply Tube

④ Wire Nuts for 16-Gauge Wiring

⑤ Water Supply Tube Connector

⑥ UL Approved Strain Relief

⑦ Hose Clamp

Installation Instructions

Tools Needed

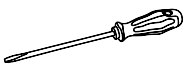

①

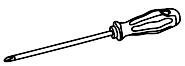

②

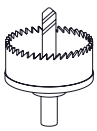

③



④

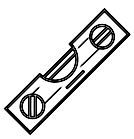

⑤

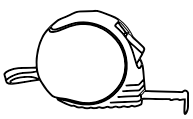

⑥

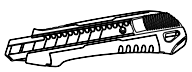

⑦



⑧



⑨

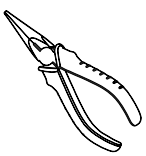

⑩

① Flat-Blade Screwdriver

② Phillips Screwdriver

③ Hole saw min.2 1/2"bit

④ Electric Drill

⑤ Level

⑥ Tape Measure

⑦ Utility knife

⑧ Adjustable Wrench

⑨ Pliers

⑩ Needle Nose Pliers

Back View

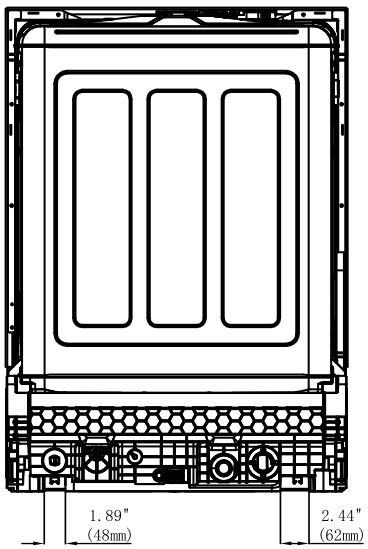

Side View

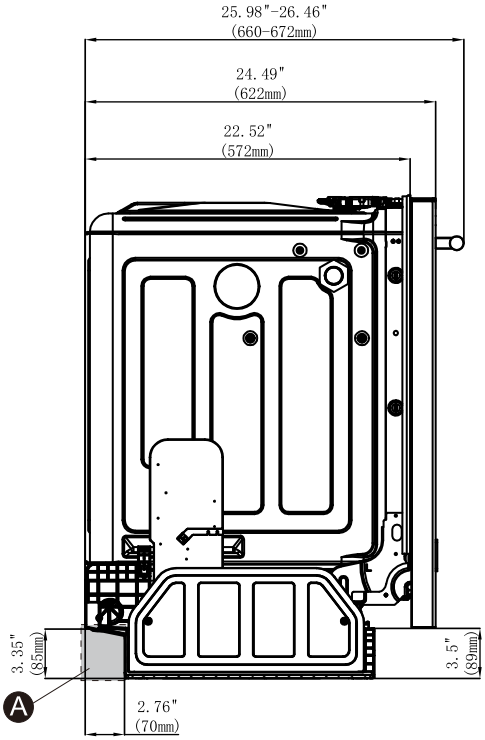

For easiest installation, see marked areas for Ⓐ water and electrical clearances in base of dishwasher. Water supply hose, drain hose and electric cable should be passed through this area.

Preparing Cabinet Opening

This dishwasher is designed to fit standard dishwasher opening. An opening may be needed on both sides to route plumbing and electrical connections. To ensure proper drainage, install the dishwasher no more than 12 ft. (3.65 m) from the sink.

The location must have sufficient space for the dishwasher door to open easily and provide at least 0.1"(2 mm) between the dishwasher and the cabinet sides. If installing the dishwasher in a corner, leave a minimum of 2" (50 mm) between the dishwasher and the adjacent wall.

The adjacent wall must be free of obstructions.

Choosing the Proper Location

1. Select a location as close to the sink as possible for easy connections to water supply line, drain hose and electrical connection.
2. To allow for proper clearance of plumbing and electrical, use the template included with the literature to determine the clearance on the side of the cabinet where the cabinet meets the back wall. Using a 2 1/2" diameter hole saw, drill a hole in the target area as shown on the template.

⚠ WARNING

- Installation damage is not covered by the warranty, and leaks caused by improper installation may result in property damage.
- Do not use existing holes unless they are in the target area.
- Failure to properly locate the hole for the water and drain lines may prevent the dishwasher from installing flush with the cabinets and could result in kinked, pinched, crushed, stressed or damaged lines.

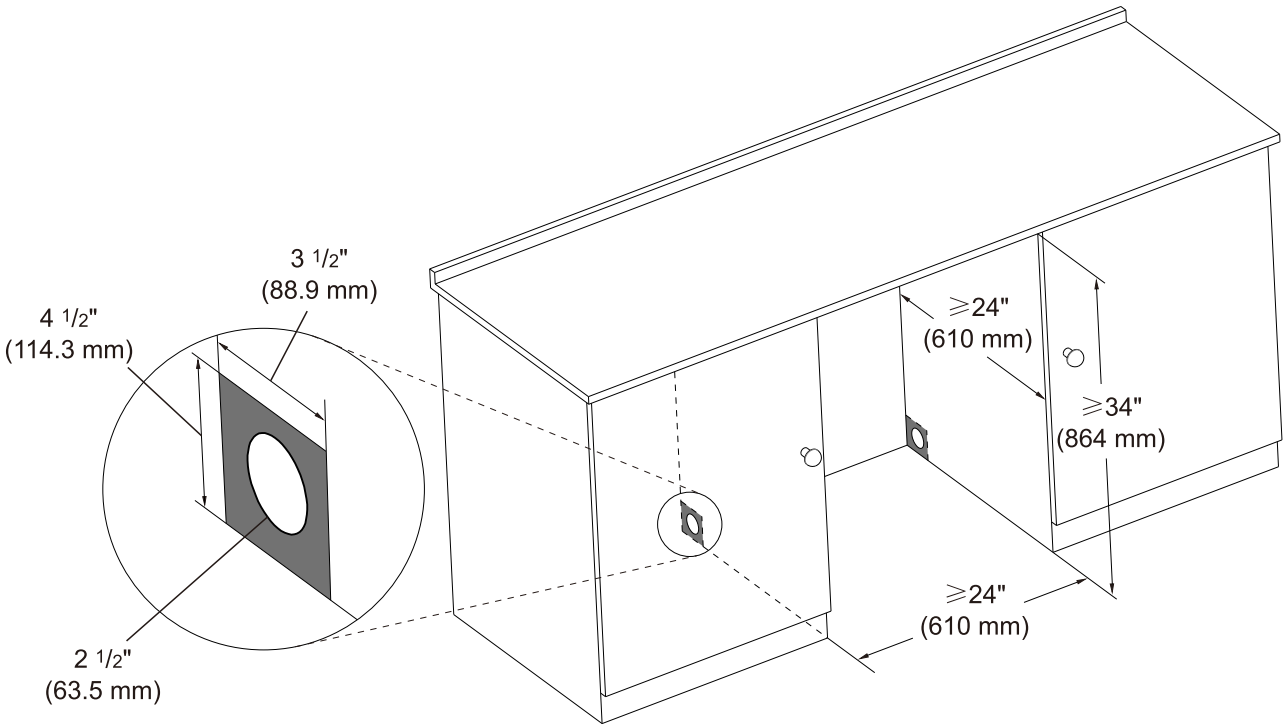

CAUTION

- When connecting the dishwasher water supply line to the house water supply, sealingtape or compound should be used on pipe threads to avoid leaks. Tape or compound should not be used on compression fittings.
- Connect the dishwasher to a hot water supply with a temperature range between 120 °F (49 °C) and 149 F (65 °C). This temperature range provides the best washing results and shortest cycle time. To prevent damage to dishes, the temperature should not exceed 149°F(65°C).
- Water supply pressure must be between 20 psi and 80 psi (140-550 kPa). If the water supply pressure exceeds 80 psi, a pressure reducing valve must be installed. Otherwise premature failure of the inlet valve may occur.

Routing Water Supply Line and Electrical Wiring and Vapor Proof

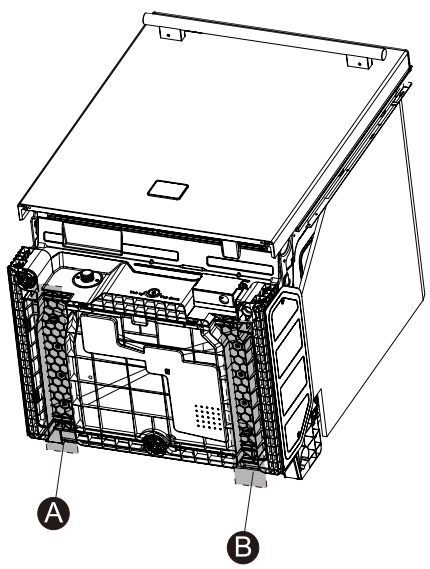

There are 2 channels in the bottom of the dishwasher for routing the water and electrical connections.
As shown in the bottom view below, channel Ⓐ is for the water supply line, and channel Ⓑ is for the electrical cable.

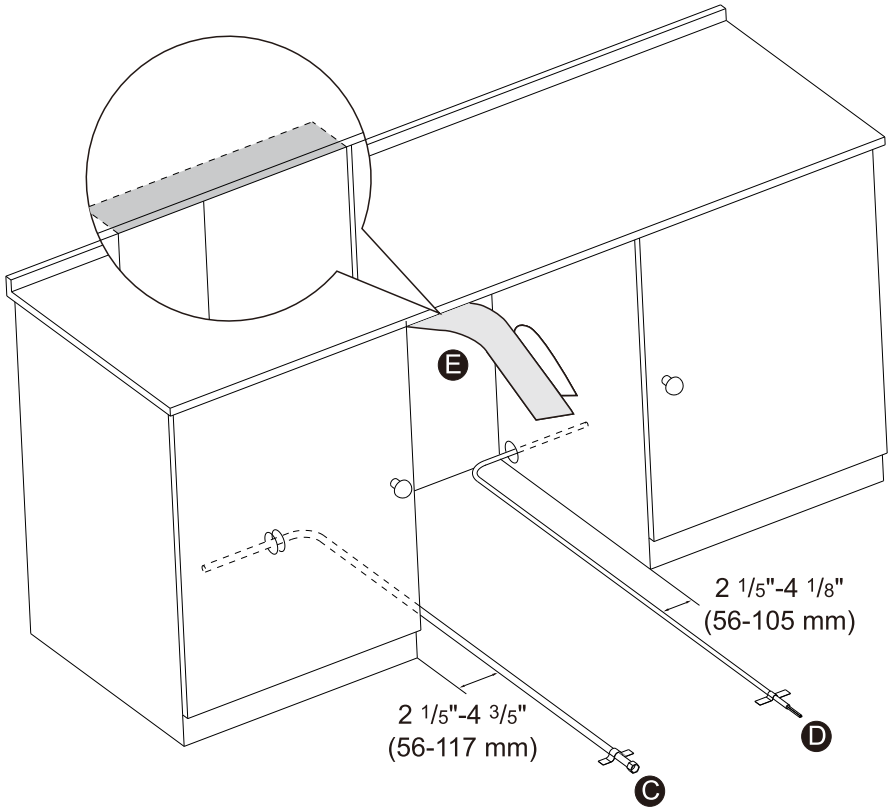

1. Turn off the house water supply and the circuit breaker or dedicated power before connecting the dishwasher.
2. Run the water supply line Ⓒ along the floor 2 1/5"-4 3/5"(56-117 mm) from the left side of the opening and tape it in place in front of the opening.
3. Run the water electrical cable Ⓓ along the floor 2 1/5"-4 1/8"(56-105 105 1mm) from the right side of the opening and tape it in place in front of the opening.
4. Stick anti steam sticker Ⓔ on the lower edge of the cabinet.

Removing Lower Cover

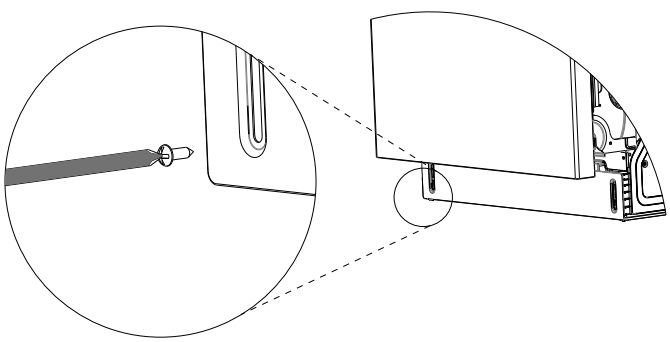

1. Remove the screws at either side which attach the lower cover to the.

2. Remove the lower cover.

3. If there is insulation padding behind the lower cover, remove it.

4. Set the parts aside until the installation is complete.

⚠ WARNING

If you lay the dishwasher on its back, do so carefully to avoid damaging the drain hose and the tub.

Attaching Installation Brackets

For countertops made of wood or other materials that will not be damaged by drilling, use the metal installation brackets provided.
For countertops made of granite, marble, or other materials that could be damaged by drilling, use the wood screws to attach the dishwasher to the cabinet.

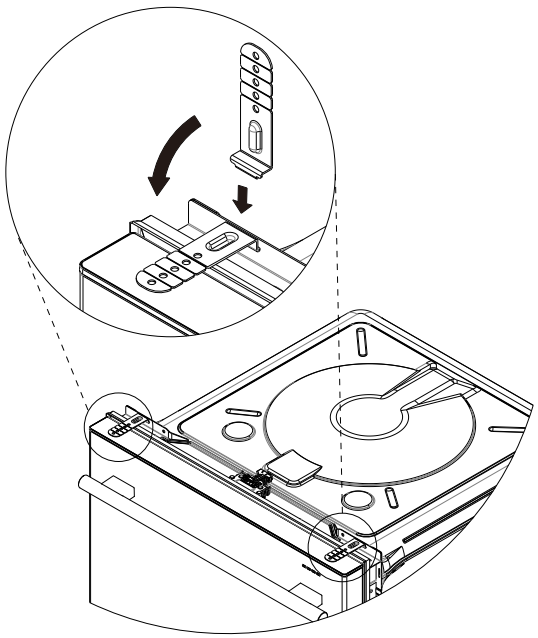

1. Insert the end of the mounting bracket with the hook into the slot on the upper frame.

2. and rotate the bracket until the side with the screw hole is horizontal complete.

WARNING

Installation brackets and screws can be found in the silverware basket.

Sliding Dishwasher into Cabinet Opening

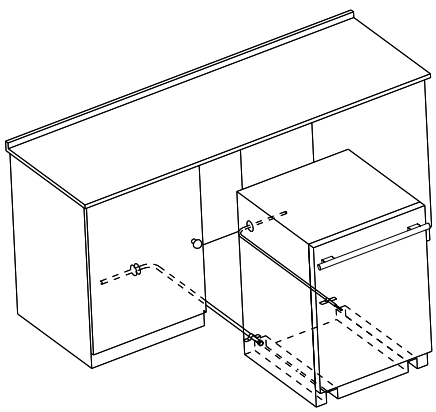

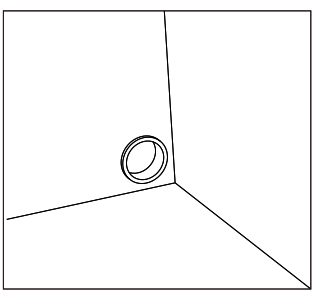

1. Align the dishwasher with the opening. Make sure the water supply line and electrical cable are in the correct positions to slide into their channels properly.
2. Smooth out or pad the edges of the hole drilled for the water supply to avoid damaging the drain hose.
3. Make sure the drain hose is straight before feeding the end of it through the hole for the water supply. As you slide the dishwasher into the opening, you will want to slowly pull on the drain hose from inside the cabinet to take up some slack. Be careful not to kink, pinch, crush or stress the drain hose during installation to avoid leaking and water damage

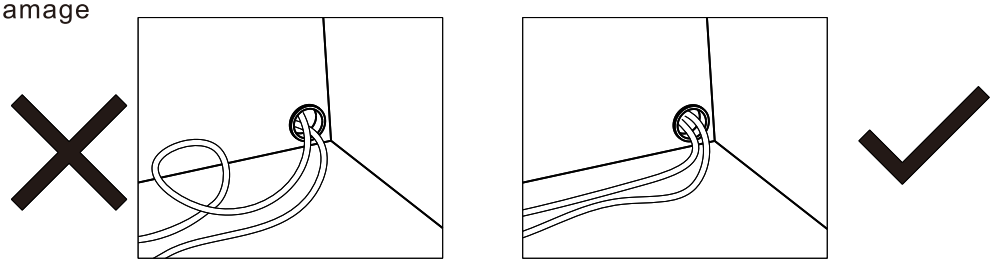

4. Gradually slide the dishwasher into the opening, making sure that the water supply line and electrical cable are passing freely through the charnels and do not get caught under the dishwasher.

WARNING

To avoid malfunctions or leakage, it is important that the drain hose not get kinked, pinched, stressed or crushed behind or under the dishwasher or inside the neighboring cabinet.
Damage resulting from improper installation is not covered under the warranty.
5. As you slide the dishwasher into the opening, stop periodically (or have an assistant help)totakeup the slack by pulling the drain hose farther into the cabinet.
6. Remove the tape from the water supply line and the electrical cable.

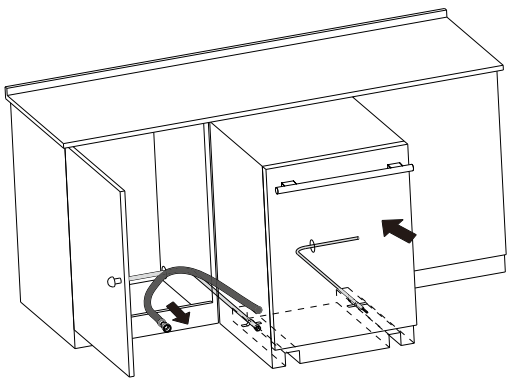

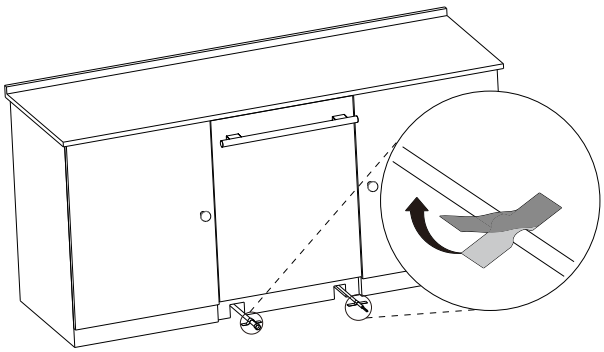

Connecting Water Supply Line

1. With the home water supply turned off, connect the water supply line to the inlet valve on the left front of the dishwasher.

WARNING

Tape or compound should not be used on dishwasher inlet valve.
2. A tighten the compression nut.
3. Slide the water supply line back through the channel, pulling gently from inside the cabinet to make sure the line is not kinked, pinched, stressed or crushed.

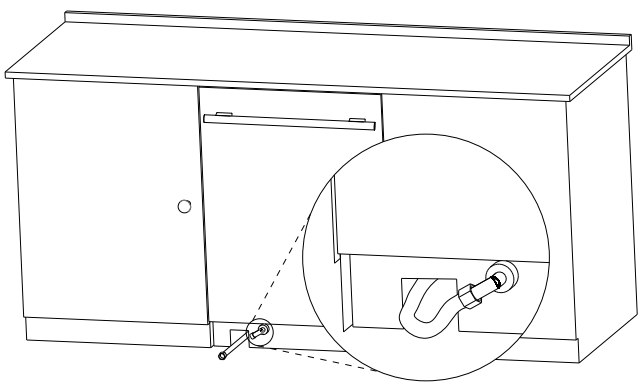

Connecting Power

The dishwasher should have a dedicated properly grounded branch circuit to connect the 3 wire setup which includes the ground wire.

If a 3-prong power supply is used, it should be in an accessible location adjacent to the dishwasher within 4 ft.(1.22 m) of the dishwasher side and not behind the dishwasher.

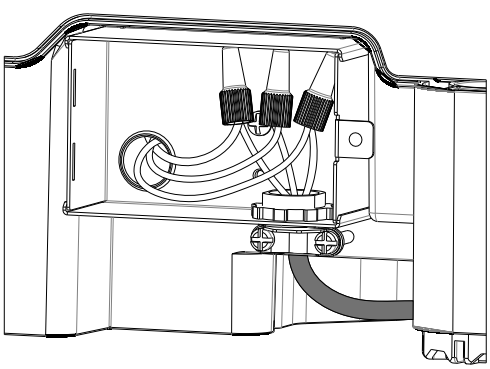

WARNING

The best location for the electrical conduit is on the right side of the back wall. Re-route the electrical cable before installation if the electrical conduit pipe is longer than 3" (76 mm) and is centered on the back wall.

1. Turn off electrical power to the unit at the circuit breaker.

2. Use a Phillips screwdriver to remove the screw from the junction box cover and remove the cover.

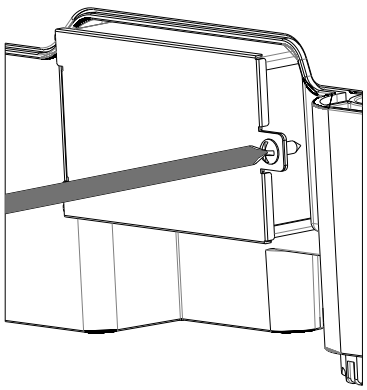

3. Insert a strain relief through the hole in screw from the junction box cover and remove the cover.

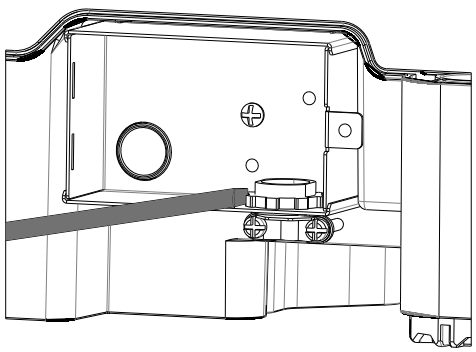

4. Insert the electrical cable through the hole in the strain relief. Tighten 2 screws to secure the cable.

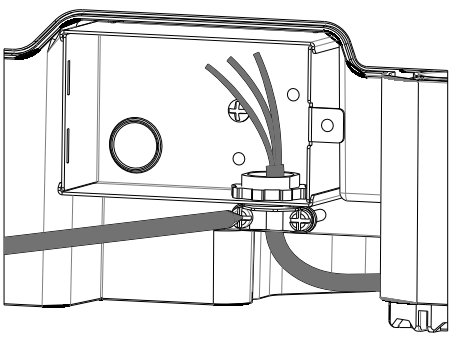

5. Pair the white, black, and green wires to the matching colored wires from the dishwasher. Then twist on the provided wire nuts tightly to connect the corresponding wires.

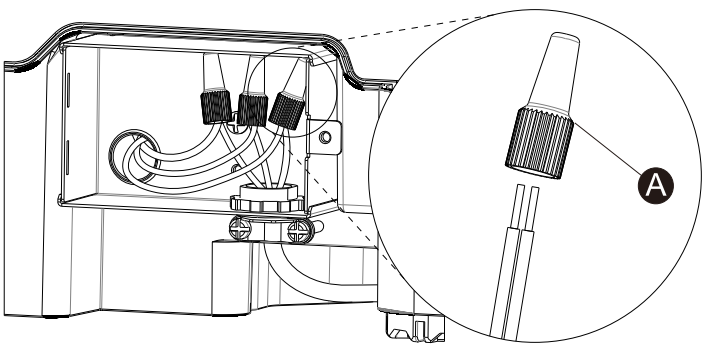

6. Fold the connected wires back into the junction box and screw on the junction box cover.

WARNING

Verify that the black wire is hot (120 V). If not, or if you are unsure of the power supply, have it checked by a licensed electrician.

WARNING

Do not leave stripped wire exposed. Trim stripped wire to fit completely inside wire nuts.

Height of Drain Hose

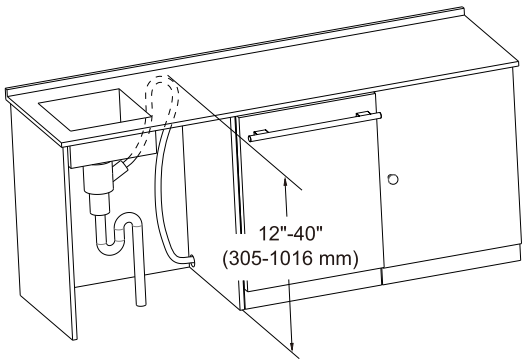

The height of the drain hose end must be at least 12"(305 mm) and within 40"(1016 mm) from the base of the dishwasher to avoid water being siphoned from the tub.

Leveling Dishwasher

Check that the dishwasher is level and adjust the leveling feet if necessary.

Adjusting Leveling Feet

Adjust as needed until the dishwasher is completely leveled.
Adjust the front and rear leveling feet until they are all in firm contact with the floor. Failure to level the dishwasher may prevent the door from closing properly and the dishwasher will not turn on.

Adjusting Leveling Feet

Use a flat-blade screwdriver to turn the front leveling feet and adjust the front of the tub. Turn the front leveling feet clockwise to raise the front of the tub and counter clockwise to lower it.

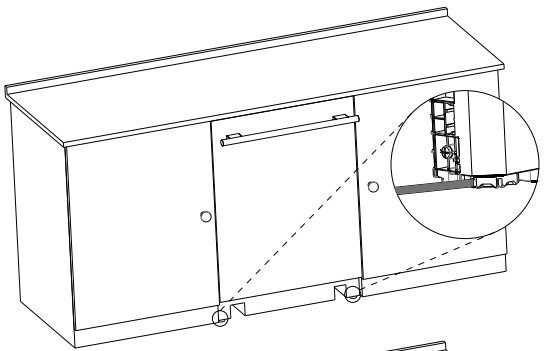

Adjusting Rear Leveling Foot

Use a flat-blade screwdriver to adjust the rear leveling foot and the rear of the tub using the center screw at the base of the appliance in the front.
Turn the center screw clockwise to raise the rear of the tub and counter clockwise to lower it.

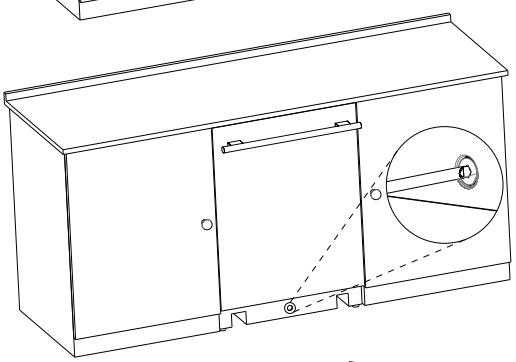

Handle installation

1.Remove the wrench from the accessory kit, turn the two screws on the left and right sides of the handle counterclockwise, and take off the handle.
2.After installing the handle, turn the two screws on the left and right sides clockwise to tighten it.

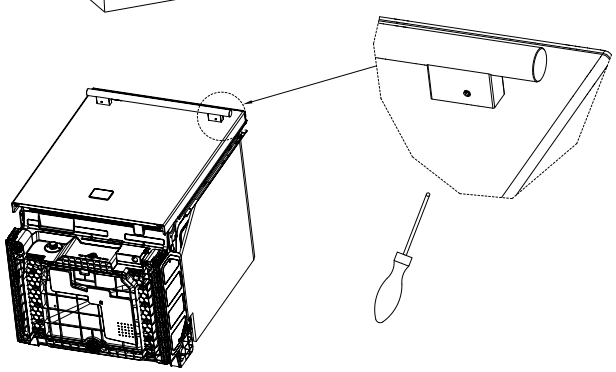

WARNING

To avoid damaging the screw, do not use an electric screwdriver.

Leveling Dishwasher Securing Dishwasher in Cabinet Opening

There are 2 options for securing the dishwasher. If the countertop is made of wood or a material that can safely be drilled into, secure the dishwasher to the countertop with the provided brackets. If the countertop is granite, marble, or a material that cannot be drilled into, secure the dishwasher to the cabinet frame with thee provided wood screws.

WARNING

Ensure the dishwasher is level and all leveling feet are in firm contact with the floor before attaching the dishwasher to the countertop or cabinet. If the dishwasher is not leveled properly, the door may not close properly or water may leak.

WARNING

Installation brackets and screws can be found in the silverware basket. Use a magnetic screwdriver. Cover the filter hole with towels to prevent screws from falling down into the pump.

Securing Dishwasher to Countertop

Use the bracket screws provided to secure the brackets at the top of the dishwasher to the underside of the wood countertop.

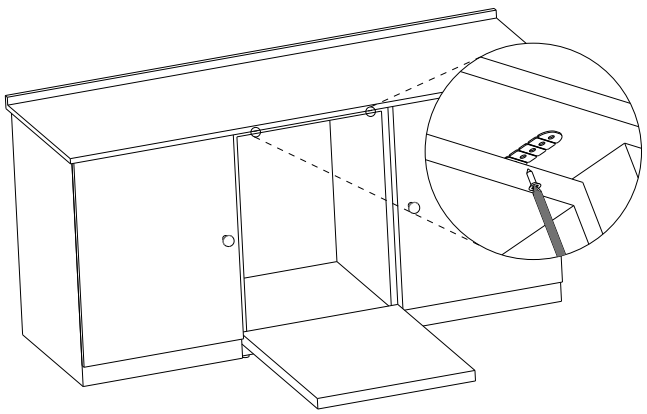

Securing Dishwasher to Cabinet Frame

If desired, the dishwasher can also be secured to the cabinet frame using the instructions which follow.

1. Remove the 2 plastic caps from the mounting bracket access holes.

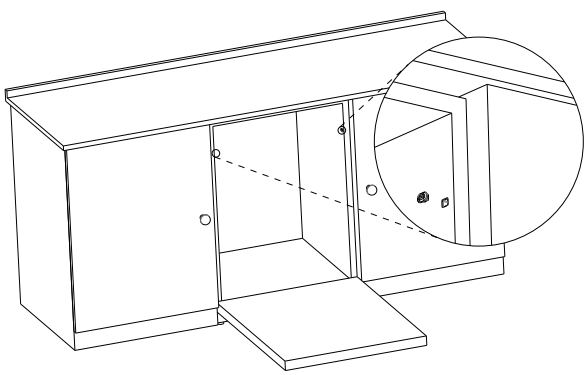

2. Drive a wood screw through the mounting bracket and into the cabinet frame.

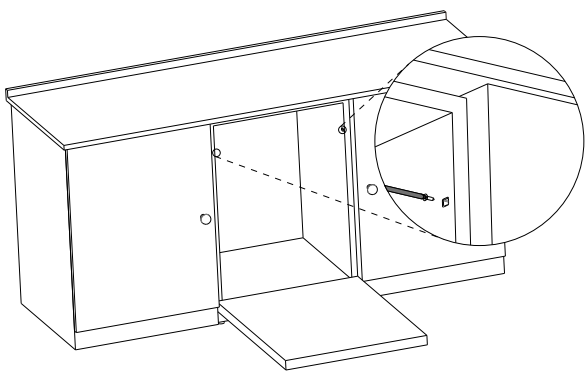

3. Reinstall the plastic caps.

4. Insert the end of the mounting bracket with the hook into the slot on the side frame.
5. Rotate the bracket until the side with the screw hole is parallel to the side of the cabinet.

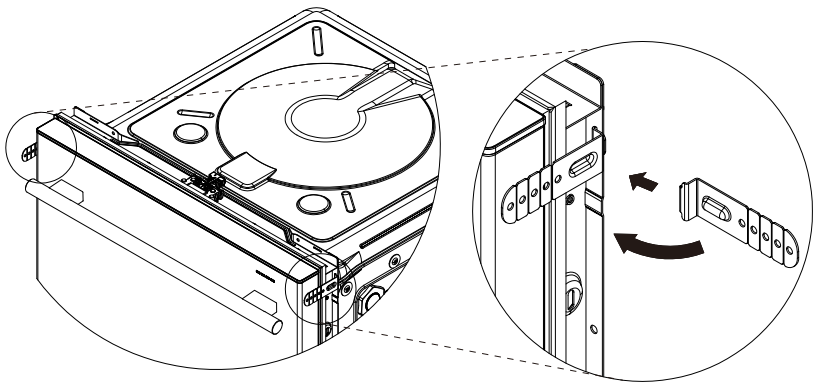

6. Drive a wood screw through the mounting bracket and into the cabinet frame.

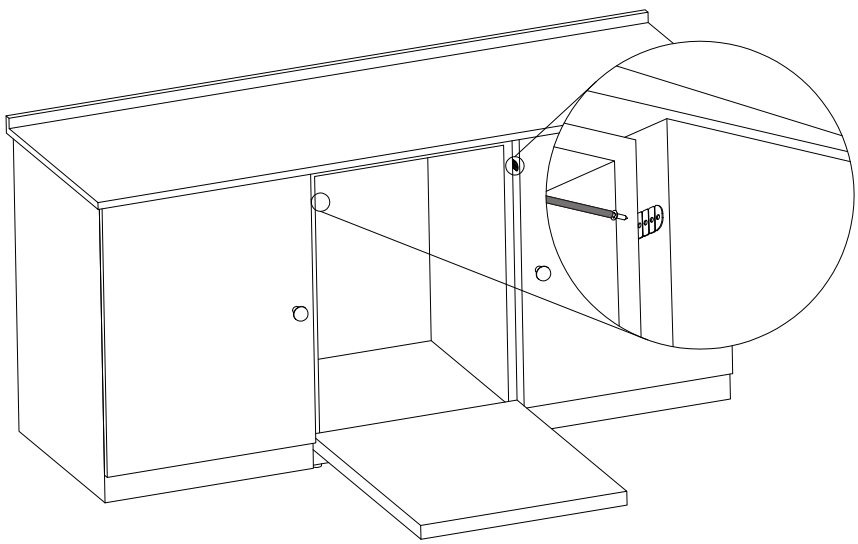

Reinstall access panels and fasteners

1. The lower cover is close to the floor.
2. Alignment of installation holes.
3. Fix with screws.

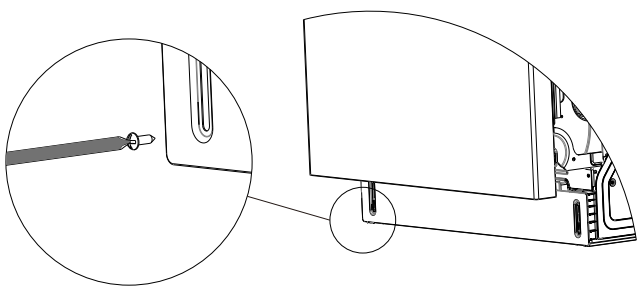

Success! Your installation is now complete.

Overview of Programs

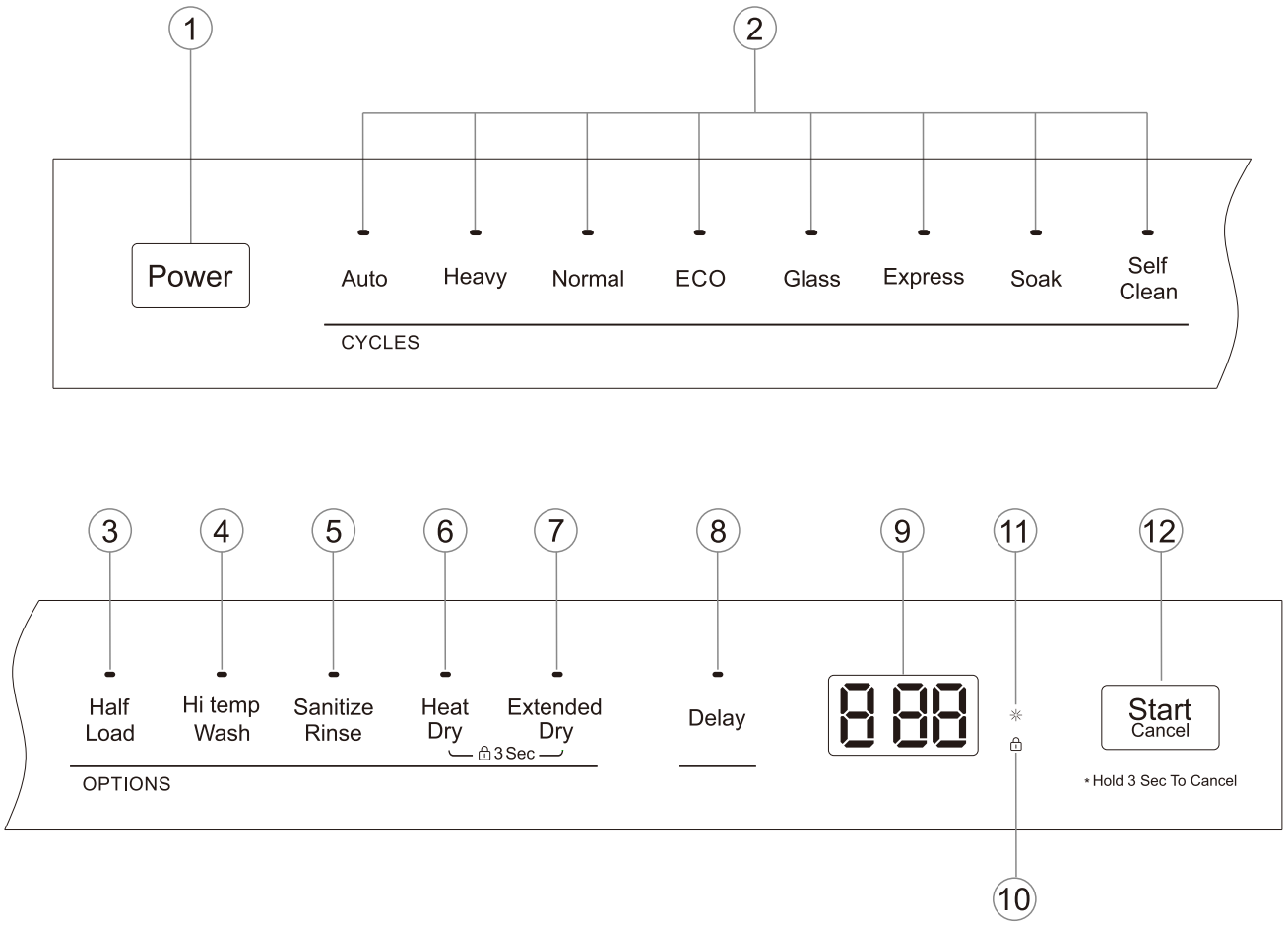

1. Power: Power ON/OFF button.
2. Cycles: With the dishwasher door open, touch the CYCLES button to select the washing cycle. Related light will be on when that cycle is selected.
3. Half Load: This option is to wash less loading dishes, that to use less water and energy for washing.
4. Hi temp Wash: When Hi Temp Wash option is selected, water is heated to be higher temperature. This helps effectively clean heavily soiled dishes.
5. Sanitize Rinse: When Sanitize is selected, the temperature of water will be maintained at 156.2 °F (69 °C) max.
6. Heat Dry: When Heat Dry is selected, the heater will work during the drying process.
7. Extended Dry: When Extended Dry is selected, the heater will operate for a longer period during the drying process.
8. Delay: The Delay option allows you to automatically delay starting your dishwasher from 1-24 hours. To start 1-24 hour delay, press the Delay button until the desired delay time shows in the display window (1h-24h) and press the START/Cancel button. A light will come on indicating the delay start has been activated and will remain on until the cycle starts. To cancel the Delay option and begin thee cycle before the delay period is over, press the Start/Cancel button and hold for 3 seconds.
9. Display window: This LED screen displays minutes remaining in a running cycle, hours of delay before the unit is set to start, error codes, etc.
   - If the machine is in operation, the remaining time (mins) of the selected cycle will be shown in the display window.
   - If the Delay option is selected, the number of hours of delay(1h-24h) will be shown in the display window. After the machine starts, the remaining time of the selected cycle will be shown in minutes on the display window.
10. Child lock: Use to lock all controls and prevent children from accidentally changing the dishwasher cycle or starting the dishwasher. Press and hold both Half Load and Auto Open button at the same time, for 3 seconds to look. After the function is select-ed the control lock icon will illuminate. Press and hold both Half Load and Auto Open button again for 3 seconds to unlock.
11. Rinse Aid Light: To come on when dispenser needs to be refilled.
12. START: Press START and close door within 4 seconds to start a wash cycle. CANCEL: Press CANCEL to cancel a cycle that is already in progress.

Overview of Programs

Wash Cycle Table

Program	Cycle Selection Information	Running Time(min)	Water (L/Cycle)
Auto	This cycle senses the load size, soil amount and soil toughness and is optimized to achieve the best cleaning.	130-160	15.2-22.6
Heavy	Use this cycle for heavily soiled and hard to clean dishes.	150	19.0
Normal	Use this cycle for normally soiled, everyday loads.	110-145	9.9-22.2
Eco	For normally soiled loads used every day, washing longer to save water and energy.	115	10.2
Glass	For lightly soiled loads, such as plates, glasses, bowls and lightly soiled pans.	95	11.5
Express	A shorter wash for lightly soiled loads that do not need drying.	35	11.5
Soak	This program can be used to flush in a shorter amount of time wash dishes.	25	4.1
Self Clean	This program can be used to clean the interior of the dishwasher.	110	11.4

Using Rinse Aid

We highly recommend using liquid rinse aid regularly to get the best drying results. Rinse aid gives a streak-free, sparkling clean look to glass and chinaware. In addition, it prevents metal from tarnishing.

When to refill the rinse aid dispenser
When rinse aid level becomes low, the rinse and salt indicators will be on to remind you.

Adjusting the rinse aid dosage
1. Press Power button to turn on the power supply.
2. Press the "Normal" button within 60s for more than 5 seconds.
3. The rinse aid dosage level is shown on the digital display. (Factory setting is d3.)
To change the setting:
4. Press "Start/Pause" button. Each press increases the set value by one level; when reaching d5, the display resets to d1.
5. If no operation is performed within 5 seconds, or if the "Power" button is pressed to turn off the power supply, the chosen setting will now be stopped.

How to refill the rinse aid dispenser
1. Pull the button to snap the dispenser cover open.

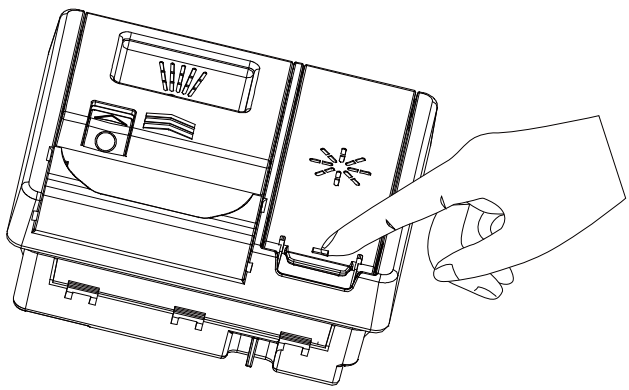

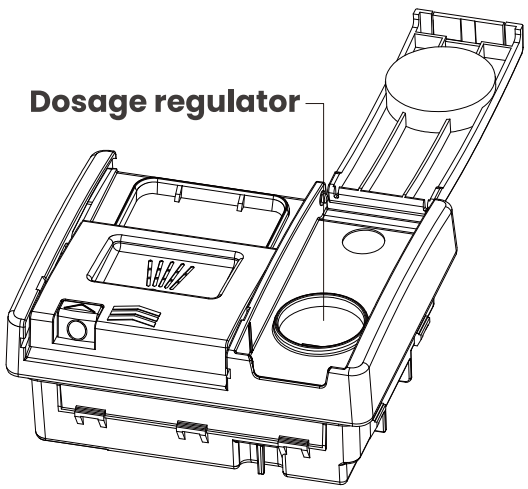

2. Pour rinse aid into the circular opening, making sure not to fill beyond the MAX marking.
IMPORTANT!
Take care not to spill rinse aid into the dishwasher. Any spills must be wiped up to prevent excess foaming. Failure to do so may result in a service call, which will not be covered by warranty.
3. Close the cover, making sure it clicks shut.

Loading Utensils

IMPORTANT!
- Never put highly absorbent materials, such as sponges and towels, in your dishwasher.
- Do not put dishes or cutlery soiled by tobacco ash, wax, lubricating grease, or paint in your dishwasher.

Silverware and Cutlery
All silverware and cutlery should be rinsed immediately after use to prevent tarnishing caused by some foods.
Silver items should not contact stainless steel (e.g., other cutlery), as mixing may cause electrochemical staining.
Remove silver cutlery from the dishwasher and hand-dry immediately after the cycle finishes.

Aluminium
Aluminium may tarnish or discolor due to dishwasher detergent. The extent of change depends on the item's quality.

Other Metals
Iron and cast iron objects can rust and stain other items.
Copper, pewter, and brass are prone to staining—wash these by hand.

Wooden
Wooden items are generally sensitive to heat and water. Frequent dishwasher use may cause warping or cracking over time. When in doubt, hand-wash.

Glassware
Most everyday glassware is dishwasher-safe.
Crystal, fine, and antique glassware may etch (i.e., become opaque), so hand-washing is recommended.

Plastic
Some plastics may warp or fade with hot water. Check the manufacturer's instructions before washing.
Secure washable plastics to prevent flipping, water accumulation, or falling through the basket during the cycle.

Decorated Items
Most modern-patterned items are dishwasher-safe.
Antique items, those with glaze-painted patterns, gold rims, or hand-painting may be sensitive to machine washing, wash by hand when uncertain.

Glued Items
Certain adhesives may soften or dissolve in the dishwasher. When in doubt, hand-wash.

If tableware or cookware is burnt, scorched, sticky, or has other stubborn food residues that are difficult to remove, it is advisable to soak it for a period before washing, or pre-treat it with a dish cloth—otherwise, it will be hard to clean. Remove any large food particles before placing dishes in the dishwasher. There is no need to pre-rinse utensils under running water.

Attention before or after Loading the Dishwasher Baskets
1. Scrape off any large amounts of leftover food. It is not necessary to rinse the dishes under running water.
Place objects in the dishwasher in the following way:
A. Items such as cups, glasses, pots/pans, etc. are stood upside down.
B. Curve items, or those with recesses, should be at aslant so that water can run off.
C. They are stacked securely and can not tip over.
D. They do not prevent the spray arms from rotating while washing takes place.
2. Very small items should not be washed in the dishwasher as they could easily fall out of the Baskets.
3. The upper and lower baskets can not be pull out in the same time when the dishwasher is loading, or it may lead to dumping.

Removing the Dishes
To prevent water dripping from the upper basket into the lower basket, we recommend that you empty the lower basket first and then the upper basket.

Loading Utensils

Loading the Upper Basket

The upper basket is designed to hold more delicate and lighter dishware such A as glasses, coffee and tea cup and saucers, as well as plates, small bowl and shallow pans (as long as they are not too dirty). Position the dishes and B cookware so that they do not get moved by the spray of water.

Loading the Cutlery Basket

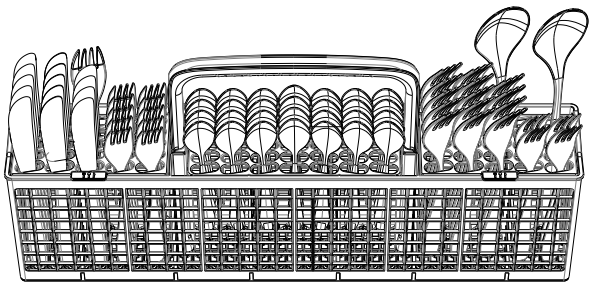

- Mix spoons with other cutlery to pre-vent them to bond together.
- Use the grid element in order to separate the cutlery.
- Place Cutlery with the handles down for better washing results.
- If long items may block the spray arms find a horizontal positioning in the upper basket.

WARNING

Put sharp and pointed items with the blade pointing downward to keep them out of harms way.

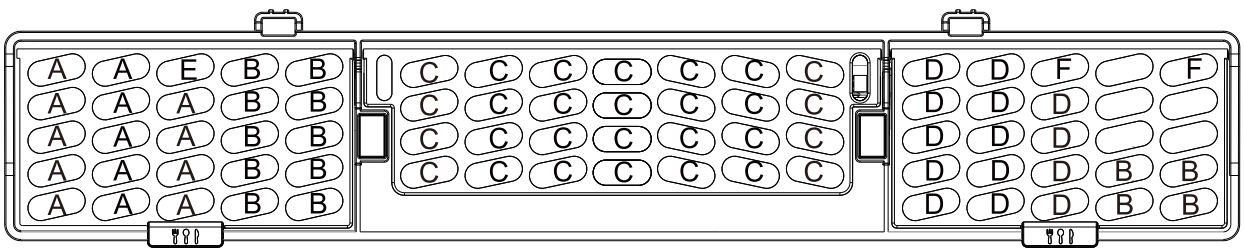

Loading the Top Cutlery Basket

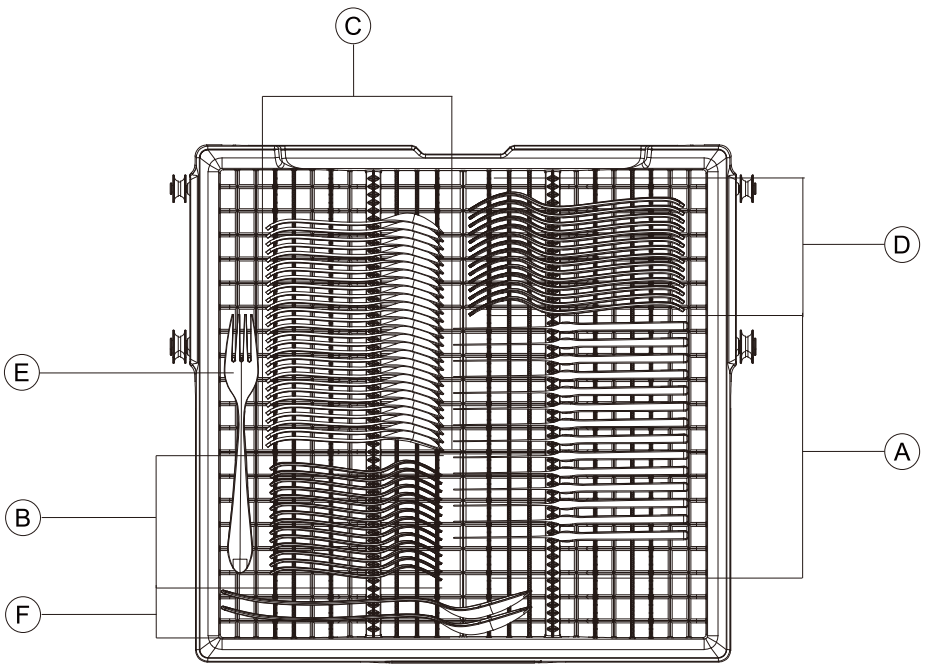

A. Knife-solid handle
B. Salad fork
C. Tea spoon
D. Dinner fork
E. Serving fork
F. Serving spoon

Loading Utensils

Loading the Upper Basket

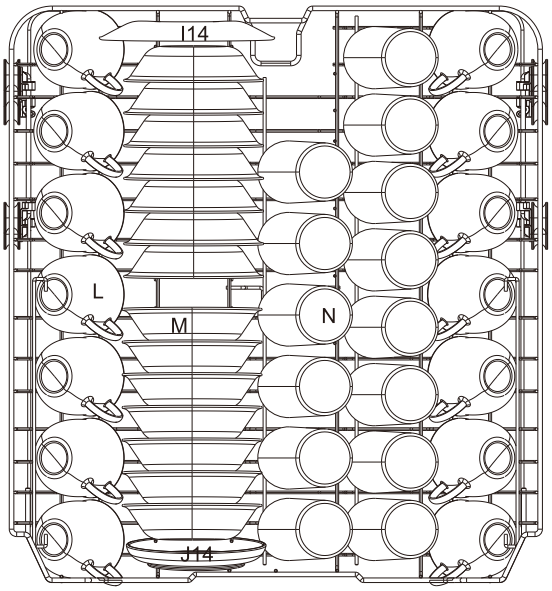

I. Bread and butter plate

J. Saucer

L. Coffee cup

M. Fruit bowl

N. Glass

Loading the Lower Basket

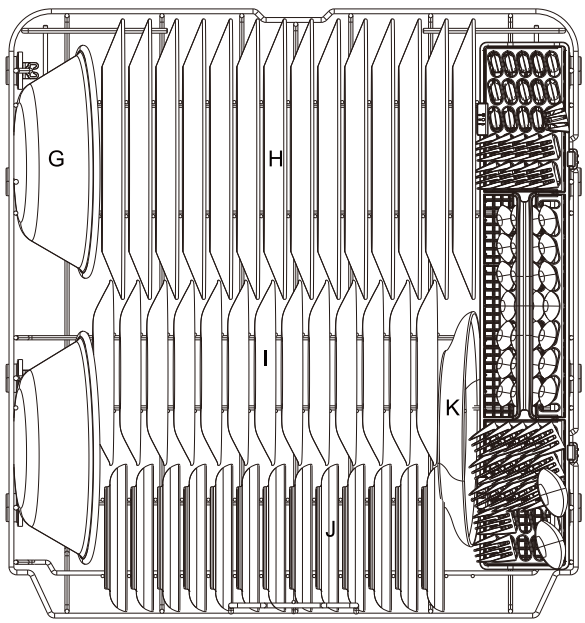

G. Serving bowl

H. Dinner plate

I. Bread and butter plate

J. Saucer

K. Serving platter

Adding Detergent

IMPORTANT!
- Only use detergents recommended for automatic dishwashers.
- Dishwasher detergents are highly alkaline. They can be extremely dangerous if swallowed. Avoid skin and eye contact, and keep children and infirm persons away from the dishwasher when it is open. After each wash cycle, check that the detergent dispenser is empty.
- Never sprinkle or pour detergent directly onto items in the dishwasher. Detergent and dishwasher tablets should not contact dishes or cutlery directly.
- Do not use hand soaps, laundry detergents, or disinfectants, as these will damage the dishwasher.

Fill the Detergent Dispenser

1. Pull the button on the right of the dispenser.

IMPORTANT!
- Approach the dispenser from the right to prevent the cover from snapping open on your hand.

2. Add detergent to the appropriate compartment(s). The '15' and '25' markings in the main wash compartment indicate grams of powdered detergent.

IMPORTANT!
- Tablets should only be placed in the main wash (larger) compartment.

3. Remove any excess detergent from the dispenser edges.

4. Close the cover and press down until it clicks. The detergent will release automatically during the wash cycle.

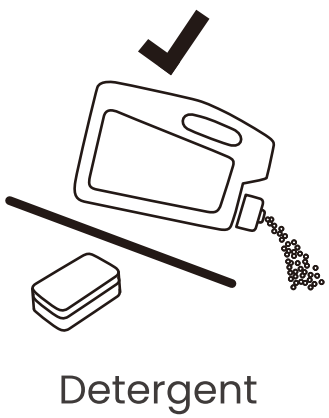

Detergent

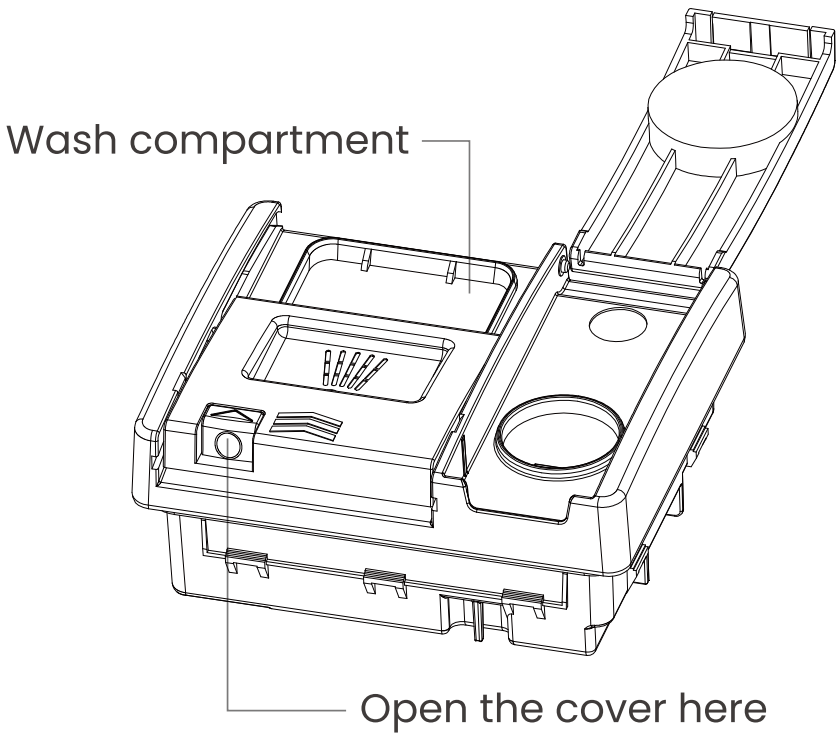

Maintenance and Cleaning

Filtering System: The filter is used to avoid the big remnants and other sundries getting inside the pump. The residue can obstruct the filter in sometime.

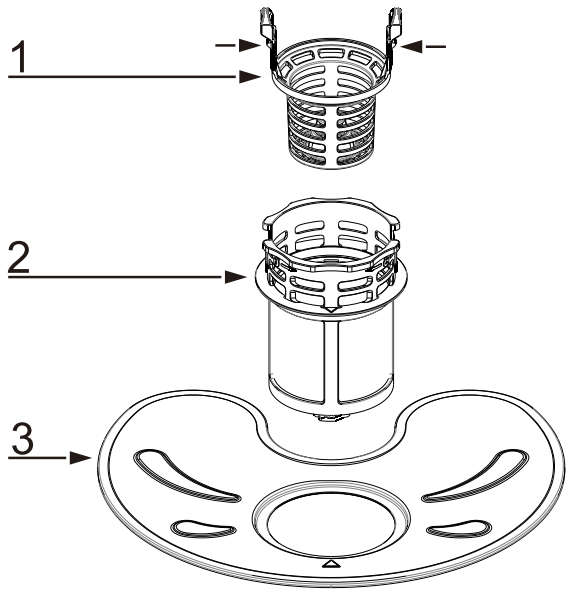

The filter system consists of a coarse filter, a flat(Main filter) and a micro filter (fine filter).

1. Coarse filter

Big debris, such as bone and glass that could clog the drain will be trapped in the coarse filter. To remove an item caught in this filter, gently squeeze the taps on the top of this filter and lift it out.

2 Micro filter

This filter holds soil and food residue in the sump area and prevents it from being redeposit on the dishes during a cycle.

- Inspect the filters for obstructions every time the dishwasher has been used.
- By unscrewing the micro filter, you can remove the filter system. Remove any food remnants and clean the filters under running water.

3 Flat filter

Food and debris will be trapped by a special jet on the lower spray arm.

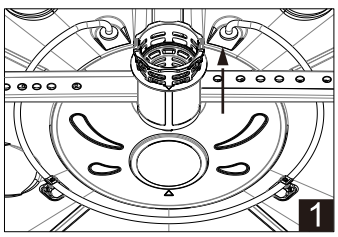

Step 1: control rotate the microfilter, and then lift it up;

Step 2: Lift the flat filter up

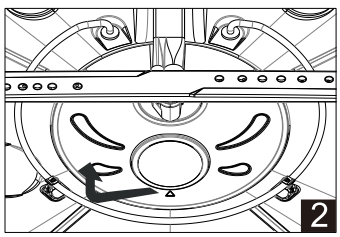

NOTE: If operate from step 1 to step 2, the filter system will be removed; while operate from step 2 to step 1, the filter system will be installed.

Filter assembly

For best performance and results, the filter assembly must be cleaned. The filter efficiently removes food particles from the wash water, allowing it to bee reticulated during the cycle. For this reason, it is a good idea to remove the larger food particles trapped in the filter after each wash cycle by rinsing the semicircular filter and cup under running water. To remove the filter assembly, pull on the cup handle in the upward direction. The entire filter assembly should be cleaned once a week. To clean the coarse filter and the micro filter, use a cleaning brush. Then, reassemble the filter parts as shown in the figures above and reinsert the entire assembly in the dishwasher, positioning in its seat and pressing downward. The dishwasher must never be used without the filters. Improper replacement of the filter may reduce the performance level of the appliance and damage dishes and utensils.

⚠ CAUTION

Never run the dishwasher without the filters in place. When cleaning the filters, don't knock on them. Otherwise, the filters could be contorted and the performance of dishwasher could be debased.

Cleaning the Spray Arms

It is necessary to clean the spray arms regularly for hard water chemicals will clog the spray arm jets and bearings.
To remove the spray arms, screw off the nut clockwise to take out the washer on top of the spray arm and remove the arm. Wash the arms in soapy and warm water and use a soft brush to clean the jets.
Replace them after rinsing thoroughly.

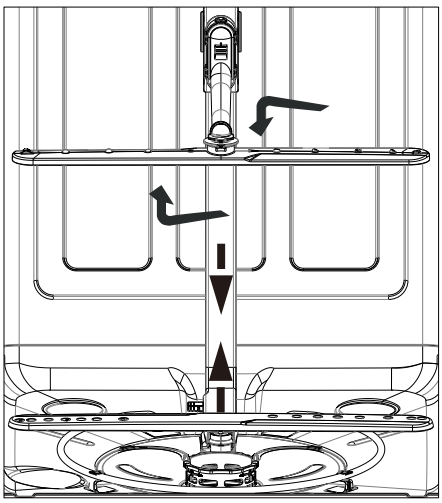

Caring for the Dishwasher

To clean the control panel, use a lightly dampened cloth then dry throughly.
To clean the exterior, use a good appliance polish wax. Never use sharp objects, scouring pads or harsh cleaners on can part of the dishwasher.

Protect Against Freezing

If your dishwasher is left in an unheated place during the winter, ask a service technical to:
1. Cut off electrical power to the dishwasher.
2. Turn off the water supply and disconnect the water inlet pipe from the water valve.
3. Drain water from the inlet pipe and water valve. (Use a pan to catch the water)
4. Reconnect the water inlet pipe to the water valve.
5. Remove the filter in the tub and the bottom and use a sponge to use up water in sump.

Cleaning the Door

To clean the edge around the door, you should use only a software, damp rag.
To prevent penetration of water into the door lock and electrical components, do not use a spray cleaner of any kind. Also, never use abrasive cleaners or scouring pads on the outer surfaces because they will scratch the finish. Some papers towels can also scratch or leave marks on the surface.

⚠ WARNING

Never use a spray cleaner to clean the door panel for it could damage the door lock and electrical components. It is not allowed to use the abrasive agent or some paper towel because of the risk of scratching or leaving spots on the stainless steel surface.

Error Codes

When malfunctions occur, the appliance will display error codes as a warning.
In the event of an error, the corresponding code on the dishwasher's control panel will flash, and the buzzer will sound.

Code	Meaning	Possible Cause/Solution
E1	Water inlet warning	•Make sure that the water inlet tap is completely open and that the water is not cut off. •Make sure there are no kinks or obstructions in the water inlet hose. If necessary, replace the hose. •Close the water inlet tap, separate the water inlet hose from the tap and clean the filter at the connection end of the hose. Restart your machine, if the error persists, contact the service.
E4	Water overflow	When there is excess water in the machine or in the event of a water leak, the overflowing water accumulates in the lower compartment. The sensor actively closes the water inlet valve and activates the drain pump. •Unplug the dishwasher or turn off the power. •Turn the dishwasher upside down •Remove the lower base cover by removing the screws and quick-fix connection. •If there's water at the bottom, clean off the water. •Restore power to the machine and check if the E4 error has disappeared. If the error persists, replace the sensor.
E5	Water temperature warning	When the water temperature exceed 85℃ for more than 10 seconds, the E5 alarm is triggered. Reset your dishwasher by turning it off at the circuit breaker, waiting a few minutes, and then turning it back on. If it has not been solved, contact an authorized service center.
Ec	Communication failure	The communication between the display board and the main control board is abnormal, and the display board shows that the Ec does not alarm. Reset your dishwasher by turning it off at the circuit breaker, waiting a few minutes, and then turning it back on. The reset process will clear all errors in the software. If it has not been solved, contact an authorized service center.
E6	Temperature sensor warning	If the thermistor circuit is open/short, it will enter the fault handling. Reset your dishwasher by turning it off at the circuit breaker, waiting a few minutes, and then turning it back on. If it has not been solved, contact an authorized service center.

WARNING

- In case of overflow, turn off the main water supply before contacting customer service. If the base pan accumulates water due to overfilling or a minor leak, remove the water before restarting the dishwasher.

Before Calling for service

Reviewing the charts on the following pages can help you avoid the need to contact customer service.

Program	Possible Causes	Solution
The door cannot be closed	The basket is not placed properly	Check if the basket is placed horizontally and correctly.
		Check if the tableware is blocking the basket from sliding into the correct position.
The dishwasher cannot start	The door is not closed properly	Check if the door is closed.
	The fuse is blown / the circuit breaker trips	Check it.
	The plug is not inserted into the power socket	Check it.
	The water pressure is too low	Check the water supply equipment and make sure the faucet is open.
	The delay option is selected	If you want to cancel the option, hold down the power switch until the dishwasher turns off, then restart it.
Noise	Incorrect tableware placement	Check if the tableware is stable placed to avoid colliding with the spray arm.
	Noise from the tub	The noise generated by water flushing the tableware is normal.
	Noise from the pump	If the dishwasher is not used frequently, make sure to perform water inlet and drainage operations once a week, which helps keep the seals moist and prevents them from drying out.
The tableware is not cleaned thoroughly	The detergent has expired	Check if the dishes are blocking the spray arm.
	Glasses and cups tip over during the washing program	Place the glass and cups stable.
	The filter is not installed correctly	Tighten the filter. Refer to "Cleaning and Care".
	The left and right sides of the upper basket are at different heights	Adjust the basket to the same height.

Troubleshooting

Program	Possible Causes	Solution
The tableware is not cleaned thoroughly	Incorrect amount of detergent used	Determine the amount according to the water hardness. Too much or too little detergent will weaken the cleaning effect.
	Incorrect loading	Do not cover dishes with large bowls or similar utensils. Avoid placing tall glasses in the corners of the bowl basket. Refer to "Utensil".
	The filter is clogged	Check the filter. Refer to "Cleaning and Care".
	The dishwasher is not cleaned properly	Refer to "Cleaning and Care".
	The spray arm is not rotating	Take out the spray arm for cleaning.
		Check if the dishes are blocking the spray arm.
	Selected a improper program	Select the proper program. Refer to "Program Overview".
Spots or films on the tableware	Improper program selection	Select the proper program. Refer to "Program Overview".
	The dishwasher is overloaded	Reduce the amount of tableware placed.
	Expired or damp detergent is used	Use the correct detergent. Refer to "Detergent Usage".
	Detergent is put in the wrong place	Put it in the correct place. Refer to "Detergent Usage".
	Incorrect setting of the rinse aid	Refer to "Rinse Aid Usage".
Unpleasant smell in the dishwasher	Dirt around the sealing and in the corners	Clean with a dish - washing brush and a low - foam cleaner.
	Long term use of low-temperature washing programs	Run a high - temperature washing program about once a month.
Excessive foam	Non - dishwasher - specific detergent is used	1. Open the dishwasher door to let the foam dissipate. 2. Close the door and start the quick wash program for drainage. 3. Repeat the above steps until the foam is cleared. 4. To avoid excessive foam, use a detergent designed specifically for dishwashers.

Troubleshooting

Program	Possible Causes	Solution
Detergent remains in the dispenser	Blocked by tableware	Reload, refer to "Utensil".
	The spray arm is not rotating	Check if the spray arm is stuck or the spray nozzles are blocked.
	An error occurred when filling the detergent during the prewash program	Check if the detergent drawer is clogged, then restart the cycle.
	The block-shaped detergent blocks the dispenser cover, preventing it from opening	Place the block-shaped detergent horizontally in the dispenser.
	A block-shaped detergent is used in the quick wash program and cannot dissolve quickly in a short time	Select the intensive wash program or switch to powdered detergent.
	Expired or damp detergent is used	Use the correct detergent. Refer to "Detergent Usage".
A lot of water remains in the tub	Power failure during drainage	Power on and restart the dishwasher washing program for drainage.
	The drainage system is clogged	Clean the drainage system.
	The drain pipe is knotted	Straighten the drain pipe. Refer to "Installation".
	The waste connection pipe is installed too high, causing back flow	Install it correctly. Refer to "Installation".
	The water inlet valve is faulty, resulting in excessive water inflow	Contact professional maintenance personnel for help.
	The door is opened before the program completed	Close the door and continue cleaning until the program ends, or restart the washing program for drainage.
	The filter is clogged	Check the filter. Refer to "Cleaning and Care".

Troubleshooting

Program	Possible Causes	Solution
The tableware is not dry	Incorrect loading	Load the tableware correctly again. Refer to "Utensil".
	Water accumulates where the tableware is placed	Place the tableware diagonally as much as possible.
	The tableware is taken out too early or the drying program has not completed	Take out the tableware after the program completed.
	The selected program has no drying function	Select a program with a drying function.
	No rinse aid is used or the set dosage is too small	Add rinse aid or increase the dosage of rinse aid.
	The rinse aid used limits the drying effect	Switch to another rinse aid.
	Poor drying effect of tableware, e.g., plastic tableware has poor heat storage function	No improvement method.
Water leakage	Excessive rinse aid added	Wipe off the overflow with a cloth and drain the excess rinse aid.
	The dishwasher is not level	Adjust it to level. Refer to "Installation".
	The water inlet valve is faulty, resulting in excessive water inflow	Contact professional maintenance personnel for help.
	The drain valve is faulty, resulting in abnormal drainage	Contact professional maintenance personnel for help.
	The flow meter is faulty	Contact professional maintenance personnel for help.
	The sealing ring is damaged	Contact professional maintenance personnel for help.

Warranty

What this limited warranty covers:
The Warranty coverage provided by Forno Appliances in this statement applies exclusively to the original Forno appliance (“Product”) sold to the consumer (“Purchaser”) by an authorized Forno dealer/distributor/retailer, purchased and installed in the United States or Canada, and which has always remained within the original country of purchase (the United States or Canada). Warranty coverage is activated on the date of the Product’s original retail purchase and has a duration of two (2) years. This warranty does not cover installation at the time of purchase or during replacement.

Warranty coverage is non-transferable. In the event of replacement of parts or of the entire product, the replacement Product (or parts) shall assume the remaining original Warranty activated with the original retail purchase document. This Warranty shall not be extended with respect to such replacement. Forno Appliances will repair or replace any component/part which fails or proves defective due to materials and/or workmanship within 2 years of the date of the original retail purchase and under conditions of ordinary residential, non-commercial use. Repair or replacement will be free of charge, including labor at standard rates and shipping expenses. Purchaser is responsible for making the Product reasonably accessible for service. Repair service must be performed by a Forno Authorized Service company during normal working hours.

Important
Retain proof of original purchase to establish warranty period. Forno’s liability on any claim of any kind, with respect to the goods and/or services provided, shall in no event exceed the value of the goods or service or part there of which has given rise to the claim.

30-Day Cosmetic Warranty
The Purchaser must inspect the product at the time of delivery. Forno warrants that the Product is free from manufacturing defects in materials and workmanship for a period of thirty (30) days from date of the original retail purchase of the Product.

This coverage includes:
- Paint blemishes
- Chips
- Macroscopic finish defects

Cosmetic warranty does NOT cover:
- Issues resulting from incorrect transport, handling and/or installation (e.g.: dents, broken, warped or deformed structures or components, cracked or otherwise damaged glass components);
- Slight color variations on painted/enameled components;
- Differences caused by natural or artificial lighting, location or other analogous factors; > stains/corrosion/discoloration caused by external substances and/or environmental factors; > labor costs, display, floor, B-stock, out- of-box,“as is” appliances and demo units.

How to receive service
To receive warranty services, the Purchaser must contact the Forno Support department in order to determine the problem and the required service procedures. Troubleshooting with a customer service representative will be necessary before moving forward with the service. Model number, serial number and date of original retail purchase will be requested.

Warranty Exclusions: What Is Not Covered.
- Use of the Product in any non-residential, commercial application.
- Use of the Product for anything other than its intended purpose.
- Repair services provided by anyone other than a Forno Authorized Service agency.
- Damages or repair services to correct services provided by unauthorized parties or the use of unauthorized parts.
- Installation not in accordance with local/state/city/county fire codes, electrical codes, gas codes, plumbing codes, building codes, laws or regulations.
- Defects or damage due to improper storage of the Product.
- Defects, damage or missing parts on products sold out of the original factory packaging or from displays. > Service calls or repairs to correct an incorrect installation of the Product and/or related accessories.
- Replacement of parts/service calls to connect, convert or otherwise repair the electrical wiring and/or gas line in order to properly use the product.
- Replacement of parts/service calls to provide instructions and information on the use of the Product.
- Replacement of parts/service calls to correct issues arising from the product being used in a manner other than what is normal and customary for residential use.
- Replacement of parts/service calls due to wear and tear of components such as seals, knobs, pan supports, shelving, cutlery baskets, buttons, touch displays, scratched or broken ceramic-glass tops.
- Replacement of parts/service calls for lack of/improper maintenance, including but not limited to: build up of residues, stains, scratches, discoloration, corrosion.
- Defects and damages arising from accidents, alteration, misuse, abuse or improper installation.
- Defects and damages arising from Product transport, logistics and handling. Inspection of the product must be made at time of delivery. Following receipt and inspection, the selling dealer/delivery company must be notified of any issues arising from handling, transport and logistics.
- Defects and damages arising from external forces beyond the control of Forno Appliances, including but not limited to wind, rain, sand, fires, floods, mudslides, freezing temperatures, excessive moisture or extended exposure to humidity, power surges, lightning, structural failures surrounding the appliance and other acts of God.
- Products whose serial number has been altered/damaged/tampered with. In no case shall Forno be held liable or responsible for damage to surrounding property, including furniture, cabinetry, flooring, panels, and other structures surrounding the Product. Forno is neither liable nor responsible for the Product if it is located in a remote area or an area where certified trained technicians are not reasonably available. Purchaser must bear any transportation and delivery costs of the Product to the nearest Authorized Service Center or the additional travel expenses of a certified trained technician

Warranty (continued)

THERE ARE NO EXPRESS WARRANTIES OTHER THAN THOSE LISTED AND DESCRIBED ABOVE, AND NO WARRANTIES, EITHER EXPRESS OR IMPLIED, INCLUDING, BUT NOT LIMITED TO, ANY IMPLIED WARRANTIES OF MERCHANTABILITY OR FITNESS FOR A PARTICULAR PURPOSE THAT SHALL APPLY AFTER THE EXPRESS WARRANTY PERIODS STATED ABOVE, AND NO OTHER EXPRESS WARRANTY OR GUARANTEE GIVEN BY ANY PERSON, FIRM OR CORPORATION WITH RESPECT TO THIS PRODUCT SHALL BE BINDING ON FORNO. FORNO SHALL NOT BE LIABLE FOR LOSS OF REVENUE OR PROFITS, FAILURE TO REALIZE SAVINGS OR OTHER BENEFITS, TIME AWAY FROM WORK, MEALS, LOSS OF FOOD OR BEVERAGES, TRAVELING OR HOTEL EXPENSES, EXPENSES TO RENT OR PURCHASE APPLIANCES, REMODELING/CONSTRUCTION EXPENSES IN EXCESS OF DIRECT DAMAGES WHICH ARE UNDENIABLY CAUSED EXCLUSIVELY BY FORNO OR ANY OTHER SPECIAL, INCIDENTAL OR CONSEQUENTIAL DAMAGES CAUSED BY THE USE, MISUSE OR INABILITY TO USE THIS PRODUCT, REGARDLESS OF THE LEGAL THEORY ON WHICH THE CLAIM IS BASED, AND EVEN IF FORNO HAS BEEN ADVISED OF THE POSSIBILITY OF SUCH DAMAGES. NOR SHALL RECOVERY OF ANY KIND AGAINST FORNO BE GREATER IN AMOUNT THAN THE PURCHASE PRICE OF THE PRODUCT SOLD BY FORNO AND CAUSING THE ALLEGED DAMAGE. WITHOUT PREJUDICE TO THE FOREGOING, PURCHASER ASSUMES ALL RISK AND LIABILITY FOR LOSS, DAMAGE OR INJURY TO PURCHASER AND PURCHASER'S PROPERTY AND TO OTHERS AND THEIR PROPERTY ARISING FROM THE USE, MISUSE, OR INABILITY TO USE THIS PRODUCT SOLD BY FORNO THAT IS NOT A DIRECT RESULT OF NEGLIGENCE ON THE PART OF FORNO THIS LIMITED WARRANTY SHALL NOT EXTEND TO ANYONE OTHER THAN THE ORIGINAL PURCHASER OF THIS PRODUCT, IS NON-TRANSFERABLE, AND STATES YOUR EXCLUSIVE REMEDY.

FORNO®
Espresso

FOR
FAST SUPPORT
EMAIL AT INFO@FORNO.CA

Customer Support: Call 1-866-231-8893 or email: info@forno.ca