Honeywell

18” Stainless Steel Dishwasher
User Manual

Read and save these instructions before use

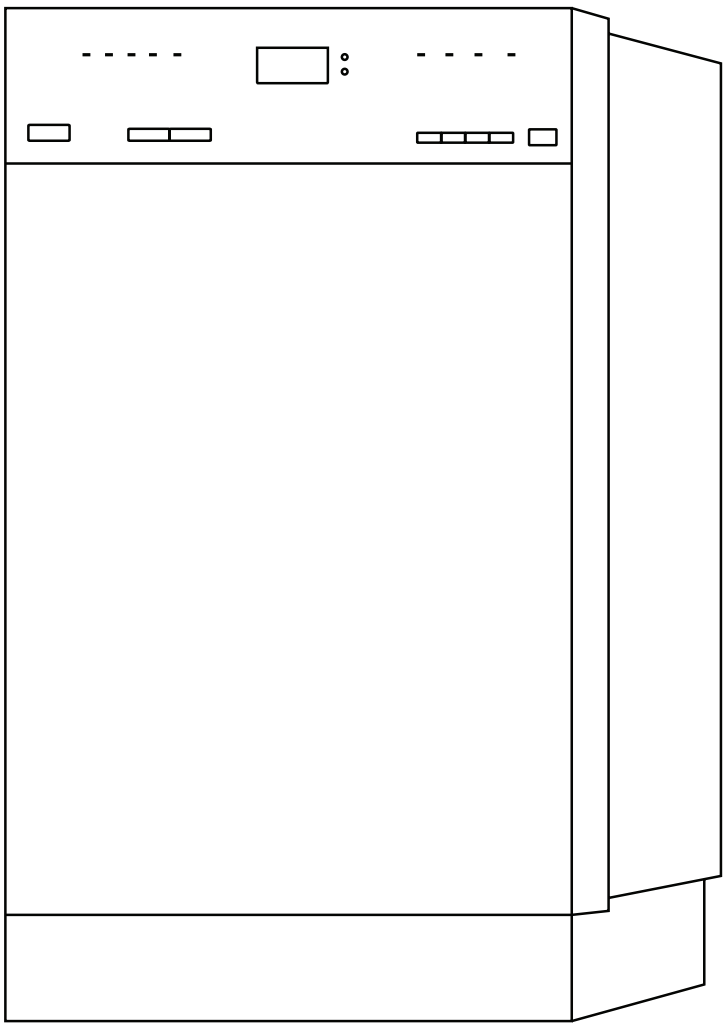

HDS18B, HDS18W

CONTENTS

1 Important Safety Instructions

1.1 Proper installation 1

1.2 Basic precautions before use 2

2 Installation Introduction

2.1 Installation instructions 4

2.2 Materials 4-6

2.3 Clearances 7

3 Installation

3.1 Selecting The Best Location For The Dishwasher 8

3.2 Checking Water Supply Requirements and Cautions 9

3.3 Check The Electrical Requirements And Cautions 10

3.4 Unpacking And Inspecting The Dishwasher 11-12

3.5 Preparing the Dishwasher 13

3.6 Placing The Dishwasher and Connecting the Hot Water 14

3.7 Leveling the Dishwasher 15-16

3.8 Securing the Dishwasher 17

3.9 Connecting the Drainhose 19-21

3.10 Wiring Connections 21-22

3.11 Completing the Installation 22-23

4 Features of Your New Dishwasher

4.1 Components 24

4.2 Filter System 25

4.3 Smart Wash System 25-26

4.4 Preparing and loading the dishes 26

4.5 Loading the Upper basket 27

4.6 Loading the Lower basket 27

4.7 Loading the Silverware Basket 28

4.8 Adding A Dish 28

4.9 Filling the rinse aid dispenser 28-29

CONTENTS

4 Features of Your New Dishwasher

4.10 Filling the rinse aid dispenser 30-31

5 Operating Instructions

5.1 How your dishwasher cleans 32

5.2 Getting Started 32

5.3 Start/Cancel 33

5.4 Wash Cycle Selections 33

5.5 Cycles 33

5.6 Options 33-34

5.7 Indicator Light 33

5.8 Error Indication 33

5.9 Screen 34

5.10 Status Indicator 35

5.11 Cycle Chart 36

6 Servicing 37-64

7 User Maintenance

7.1 Cleaning the Exterior 65

7.2 Cleaning the Interior 65

7.3 Cleaning the Filters 65-66

7.4 Checking the Nozzles 64-65

8 Troubleshooting 66-68

8.1 Error Codes 68

9 Technical Information 69

1 IMPORTANT SAFETY INSTRUCTION



WARNING: For your safety, please follow the information in this manual to minimize the risk of fire, explosion, electric shock and to help prevent property damage or personal injury.

1.1 Proper Installation

Please install your dishwasher properly by following the installation guide.

- Water supply inlet temperature should be between 120°F and 149°F.
- Dispose of discarded appliances and packing materials properly.
- The dishwasher must be properly grounded, or it can result in a risk of electric shock. PERMANENTLY CONNECTED and CORD-CONNECTED are both allowed.
- If there is any damage to the Dishwasher, please contact to your Dealer, do not to attempt to repair or replace any parts by yourself.

1.2 Basic Precautions Before Use

- Read all instructions before using the dishwasher.
- The manual does not cover every possible condition and situation that may occur.
- Use the dishwasher only for its intended function as described in this manual.
- When loading items to be washed, arrange sharp items and knives so that they are not likely to damage the door seal and tub. Load these items with the handles upright in order to reduce the risk of personal injury.
- Do not wash plastic items unless they are marked dishwasher safe. If they are not marked, check with the manufacturer for recommendations. Items that are not dishwasher safe may melt and create a potential fire hazard.
- If the dishwasher drains into a food disposer, make sure the disposer is completely empty before running the dishwasher.
- Do not tamper with controls.
- Do not operate your dishwasher unless all enclosure panels are properly placed.
- Do not touch the heating element during or immediately after use, especially if the sanitize option has been selected.
- To reduce the risk of injury, do not allow children to play in or on a dishwasher.

- Do not let children hit, sit or stand on door or racks of the dishwasher.
- Under certain conditions, hydrogen gas may be produced in a hot water system that has not been used for two weeks or more. HYDROGEN GAS IS EXPLOSIVE. If the hot water system has not been used for such a period, before using the dishwasher, turn on all hot water faucets and let water flow for several minutes. This will release any accumulated hydrogen gas. Hydrogen gas is flammable. Do not smoke or use an open flame during this time.
- Do not store or use combustible materials, gasoline or other flammable vapors and liquids in the vicinity of this or any other appliance.
- Use only detergents or rinse agents recommended for use in a dishwasher and keep them out of the reach of children.
- Keep young children and infants away from dishwasher while it is operating.
- Do not use the dishwasher if it has a damaged power line or plug, and do not plug the dishwasher into a damaged outlet. Failure to observe these instructions may result in electrical shock.
- Remove the door to the washing compartment when removing an old dishwasher from service or discarding it.

SAVE THESE INSTRUCTIONS

2 INSTALLATION INTRODUCTION



BEFORE YOU BEGIN Read these instructions completely and carefully.

IMPORTANT Observe all governing codes and ordinances.

NOTE TO INSTALLER Be sure to leave these instructions for the consumer's and local inspector's use.

NOTE TO CONSUMER Keep these instructions with your Owner's Manual for future reference.

SKILL LEVEL Installation of this dishwasher requires basic mechanical and electrical skills. Proper installation is the responsibility of the installer. Product failure due to improper installation is not covered under the Appliance Warranty.

COMPLETION TIME 1 to 3 Hours. New installations require more time than replacement installations.

IMPORTANT The dishwasher MUST be installed to allow for future removal from the enclosure if service is required. If you received a damaged dishwasher, you should immediately contact your dealer or builder.

FOR YOUR SAFETY Read and observe all CAUTIONS and WARNINGS shown throughout these instructions. While performing installations described in this booklet, gloves, safety glasses or goggles should be worn.

WARNING To reduce the risk of electrical shock, fire, or injury to persons, the installer must ensure that the dishwasher is completely enclosed at the time of installation.

READ CAREFULLY. KEEP THESE INSTRUCTIONS. If you have an installation problem, contact your dealer or installer. You are responsible for providing adequate electrical, exhausting and other connecting facilities.

2.1 Installation Instructions

Read the installation instructions clearly , and futher more, pay attention to the following lists:

01 The power-supply receptacle for the appliance shall be installed in a cabinet or on a wall adjacent to the undercounter space in which the appliance is to be installed.

02 There shall be an opening through the partition between the compartments specified in (a) that is large enough for the attachment plug to pass through. The longest dimension of the opening shall not be more than 38 mm (1.5 in).

03 The edges of the opening specified in (b) shall, if the partition is wood, be smooth and rounded, or, if the partition is metal, be covered with an edge protector provided for this purpose by the manufacturer.

04 Care shall be exercised, when the appliance is installed or removed, to reduce the likelihood of damage to the power-supply cord.

A hose that attaches to a sink spray can burst if it is installed on the same water line as the dishwasher. If your sink has one, it is recommended that the hose be disconnected and the hole plugged.

2.2 Materials

Parts Supplied

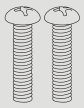	Flat head wood screws to secure dishwasher to underside of countertop	x4
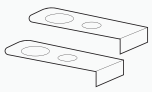	Side & top mounting clips	x2 ea.
	Screw type hose clamp	x1
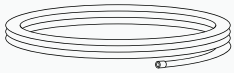	Drain Hose	x1

Materials You Will Need

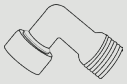	90° fitting (3/8") The other end should be sized to fit the water supply line	x1

	Thread Seal Tape	x1
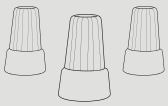	UL listed wire nuts	x3

Materials For New Installations Only

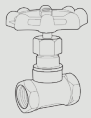	Hand shut-off valve	x1
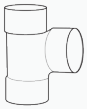	Waste tee for house plumbing, if applicable	x1
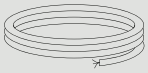	Electrical cable or power cord, if applicable	x1
	Air gap for drain hose, if required	x1
	Screw type hose clamps	x1
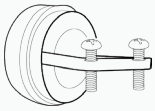	Strain relief for electrical connection	x1
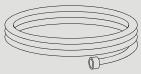	Water line 3/8” min. copper/ stainless steel	x1
	Coupler for extending drain line, if applicable	x1

Tools You Will Need

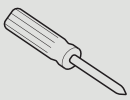	Phillips head screwdriver	x1

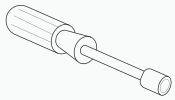	5/16” and 1/4” nutdriver	x1
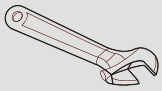	6” adjustable wrench	x1
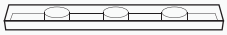	Level	x1
	Carpenters square	x1
	Measuring Tape	x1
	Safety glasses	x1
	Flashlight	x1
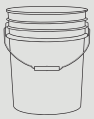	Bucket to catch water when flushing the line	x1
	Gloves	x1

Tools For New Installations Only

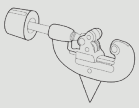	Tubbing cutter	x1
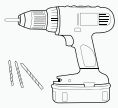	Drill and appropriate bits	x1
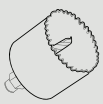	Hole saw set	x1

2.3 Clearances

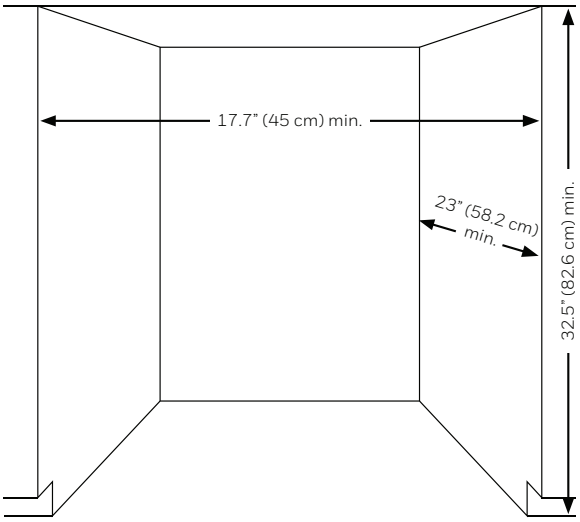

3 INSTALLATION

3.1 Selecting the Best Location for the Dishwasher

The following criteria are important to ensure the best location for the dishwasher: The location must have a solid floor that is able to support the weight of the dishwasher.

The location must be near a sink with easy access to the water supply, drain, and electrical outlet.

For the drain to operate properly, the dishwasher should be installed within 9.8 ft (3 m) of the sink.

The location must let you load your dishes into the dishwasher easily.

The location must have sufficient space for the dishwasher door to open easily and provide enough space between the dishwasher and the cabinet sides (at least 0.1 in (2 mm)).

If the dishwasher is installed in a comer, ensure that the side of the dishwasher is more than 2 in (50 mm) from the wall or cabinet to its right or left.

The wall at the back must be free of obstructions.

If this is a new installation, follow these steps:

If the dishwasher is replacing an old dishwasher, you must check the exising dishwasher connections for compatibility with the new dishwasher. Repace the existing connections as necessary.

01 Using a hole saw, cut a hole into the side of the cabinet that hold the sink as shown below.

02 If the base inside the sink cabinet is raised above the kitchen floor and is higher than the connections on the dishwasher, make a hole in the base inside the cabinet and in the cabinet side as shown in Figure 1-2.

Depending on where your electrical outlet is, you may need to cut a hole in the opposite cabinet side.

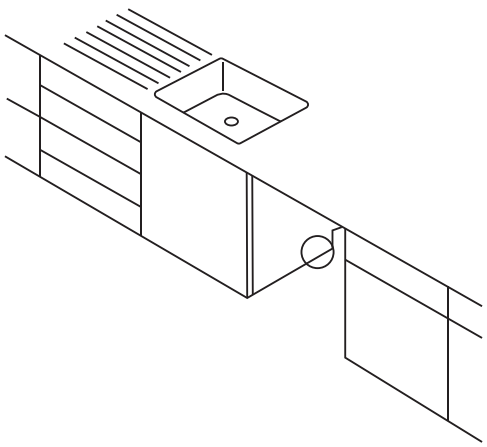

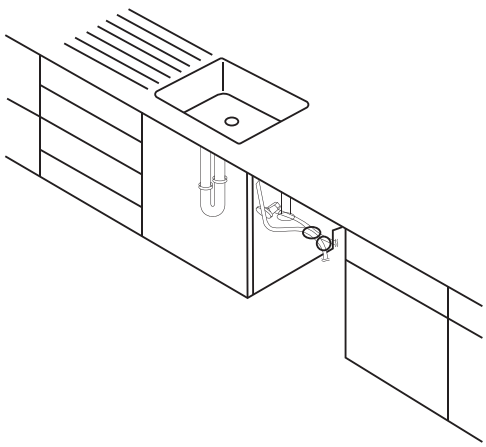

3.2 Check Water Supply Requirements and Cautions

The hot water supply line pressure must be between 0.04-1MPa.

Adjust the water heater to deliver water between 120 °F(49°C) ~149 °F(65°C).

The dishwasher must be connected to a hot water supply between 120 °F(49°C)~149 °F(65°C).

This temperature range provides the best washing result and shortest cycle time. Temperature should not exceed 149 °F(65°C) to prevent damage to dishes.

Ensure that the water supply valve is turned off before connecting the hot water supply line to the dishwasher.

Seal the hot water supply line connections using teflon tape or sealing compound to stop any water leakage.

When you install the dishwasher, ensure there is nothing on the drain hose and be careful not to tear it during the installation process.

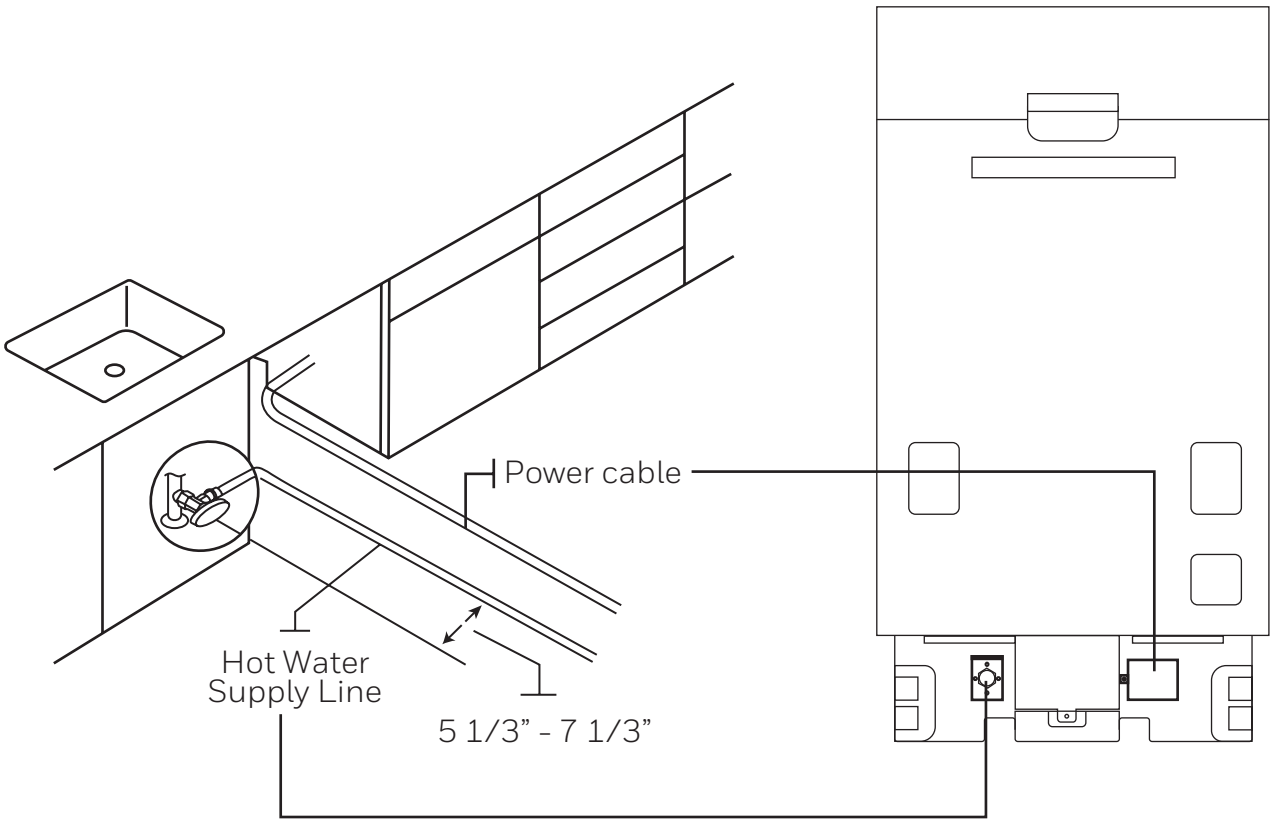

3.3 Checking the Electrical Requirements and Cautions

In the United States, install in accordance with the National Electric Code/State and Municipal codes and/or local codes.

In Canada, install in accordance with the Canadian Electric Code C22.1-latest edition/Provincial and Municipal codes and/or local codes.

For cable direct connections.

Use flexible, armored or non-metallic sheathed, copper wire with a grounding wire that meets the wiring requirements for your local codes and ordinances.

Use the strain relief method provided with the wiring junction box or install a U.L.-listed/CSA certified clamp connector to the wiring junction box. If using conduit, use a U.L.-listed/CSAcertified conduit connector.

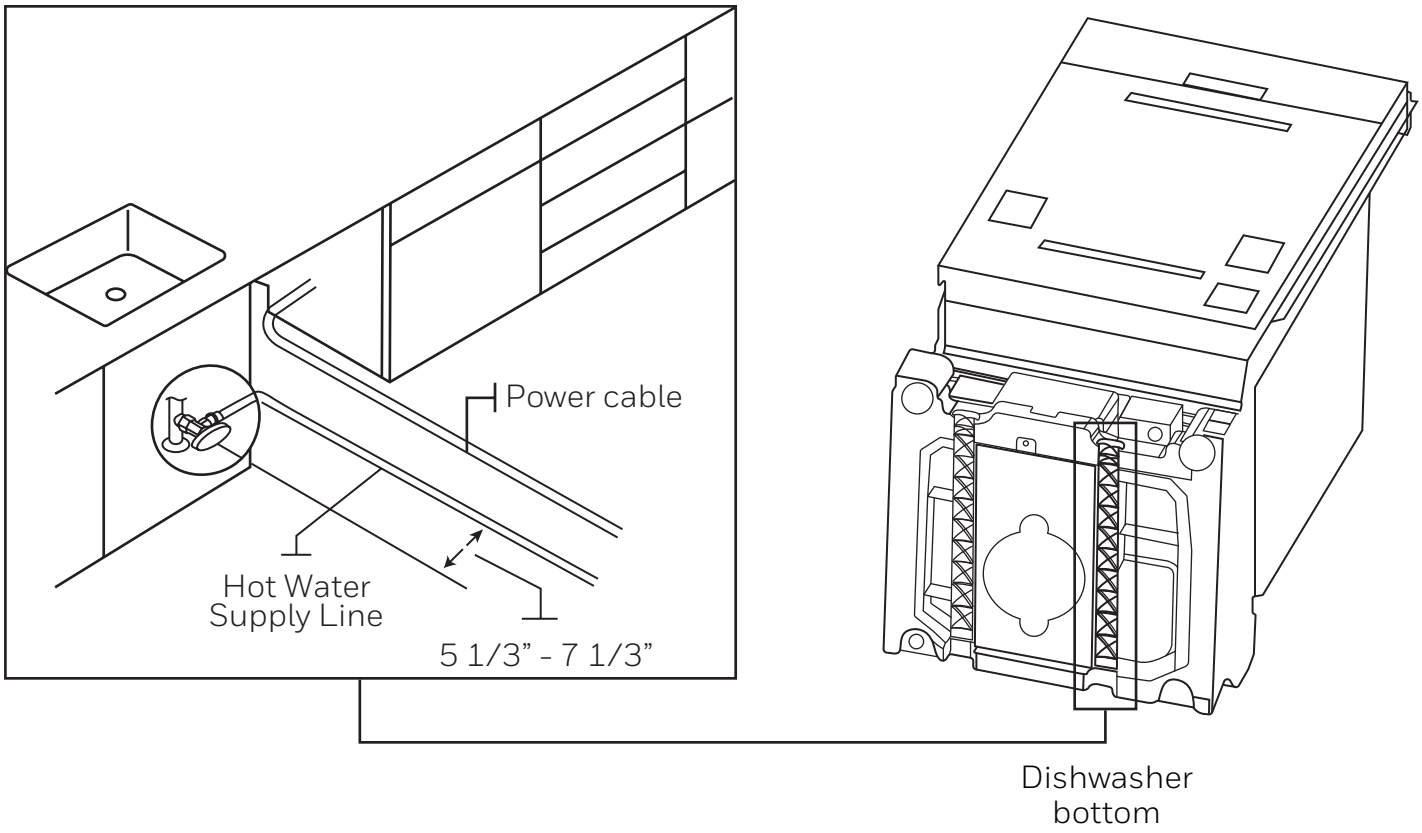

3.4 Unpacking And Inspecting The Dishwasher

Unbox the dishwasher in an open area free of obstruction both around the carton and overhead. We recommend that you retain the carton and all of the packing materials until the dishwasher is fully installed and operational to ensure you have removed all the product's components from the carton prior to disposal.

Unboxing

01 Unbuckle or cut the four straps securing the carton top.

02 Lift the top of the telescoping carton clear of the carton tray and the contents, and then turn it over and place it on the floor.

03 Put the straps and all of the packing materials from around the dishwasher inside the carton top, inspecting them for any signs of damage.

04 Lift the dishwasher from the carton tray, and then place it on the floor. Put the tray into the carton top.

05 Remove the bag that protects the dishwasher during shipping.

ALWAYS LIFT THE DISHWASHER TO MOVE IT.

Sliding it over rough surfaces can damage the dishwasher's feet and sliding the feet over finished surfaces can, in some cases, damage that finish or the underlying surface.

06 There is also packing inside the dishwasher that you may want to leave in place until the dishwasher is installed.

07 DO NOT, under any circumstances, remove the sound-absorbent padding that surrounds the exterior of the tub of the dishwasher.

Inspecting

Mechanical

01 Check the plastic base assembly to ensure that it is intact

02 Check the dishwasher's feet to ensure they are in place and can be adjusted so you can level and secure the dishwasher.

03 Check all the visible components on the bottom of the dishwasher to ensure they are intact and secure.

04 Check the door latch, the operation of the hinges, and confirm the door is properly secured to the dishwasher.

Plumbing

01 Check the hot water connection on the front left-side of the base of the dishwasher. The mounting plate should be secured to the front of the base, the threads inside the connection should be smooth and shiny, and the area should be clean and free of any debris.

02 Check the plastic Brake and Sensor cases to ensure these assemblies are not cracked and that all nconnections are secure.

03 Check the drain hose for any holes or deformities that could allow a water leak during draining.

Electrical

01 Confirm the junction box cover is secured to the junction box on the front right-side of the base of the dishwasher.

02 Confirm the electrical box was not damaged during shipping and that it is secured to the base of the dishwasher.

Appearance

01 Confirm there are no dents or scratches on the front of the dishwasher

02 Check the edges of the doors for any roughness or cracking

03 Check the control panel to ensure it is clear and unscratched, and that all the control markers are in their proper places.

Parts

01 Confirm you have all the parts listed in Step 1 an page 6.

3.5 Preparing The Dishwasher

01 Ensure that the circuit breaker and water supply valve are turned off before proceeding with the following steps.

Before you move or lay down the dishwasher for installation, make sure to adjust the height of the legs so the legs are as short as possible. This prevents the legs from breaking. Level the dishwasher by adjusting the height of the legs after you have the dishwasher in place.

02 Make sure there are no kinks and that the hose is not bent at any extreme angles that could constrict the flow of water.

03 Remove the junction box cover located at the bottom front right of the dishwasher using a screwdriver, and then Install the strain relief (Figure 4 - C). Make sure to keep the junction box cover you removed. It is used in Step 11, Wiring Connections.

04 If the countertop is made of wood or a material that is not damaged by drilling, attach the two Installation brackets that were supplied with the dishwasher using the supplied screws (Figure 4 - A). They will be used in Step 9. Securing the Dishwasher

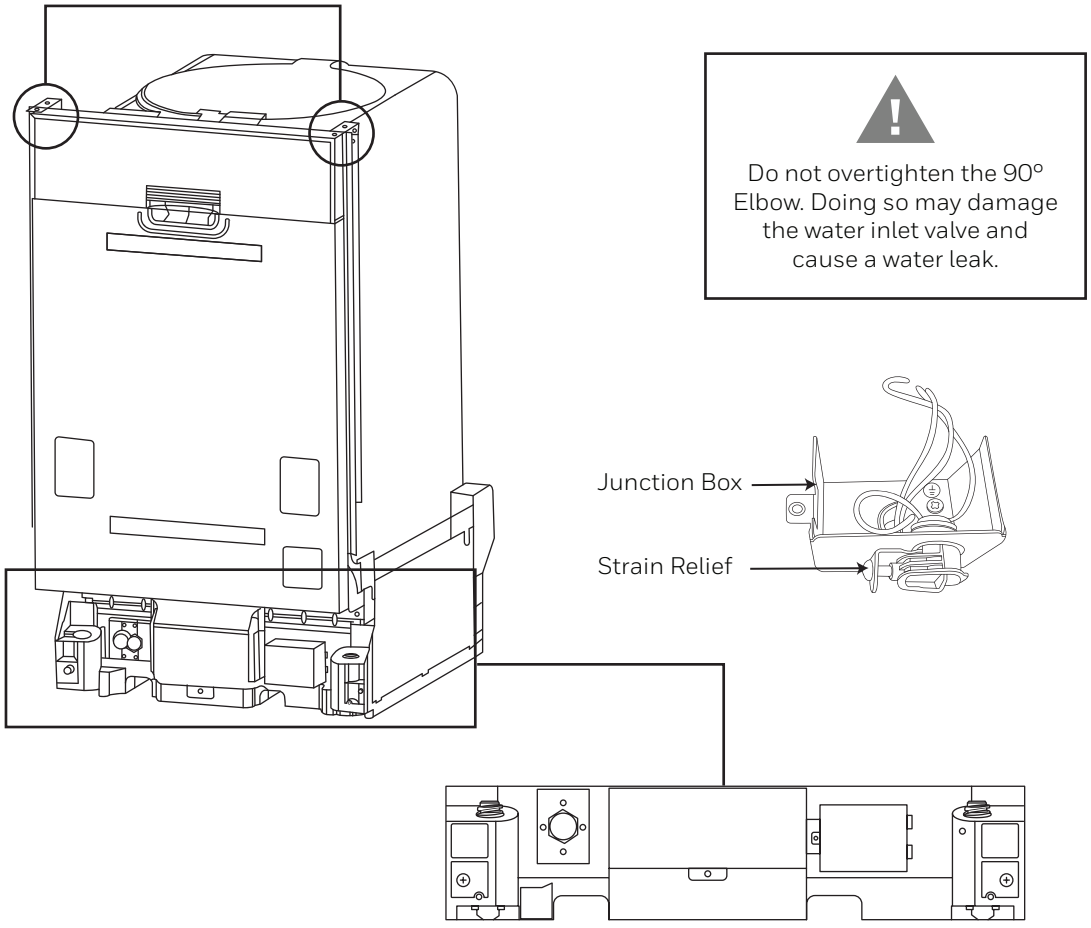

3.6 Placing The Dishwasher and Connecting the Hot Water Supply Line

01 Adjust the three leveling legs at the bottom of the dishwasher after measuring the height of the cabinet opening from under the countertop to the floor. (See Step 8, Leveling the Dishwasher.)

02 Locate the hot water supply line and the power cable.

03 Place the dishwasher so that the power cable is in the right channel of the base of the dishwasher. Use standard duct tape or cable ties to secure the electrical cable to their adjacent channels in the base. This can prevent the electrical cable from being squeezed when you push the dishwasher into place.

04 Pull the drain hose through the hole in the sink cabinet side wall. Keep it free of kinks.

05 Make sure the hot water supply line is not twisted, and then connect the hot water supply line to the elbow joint.

06 Slide the dishwasher carefully into the installation space. If possible, gently pull any excess lengths of water supply line, drain hose, or power cable back as you move the dishwasher. Get a second or third person to help you do this if necessary.

Do not place the dishwasher on the water supply line, drain hose, or power cable. Also, make sure they are not folded or twisted.

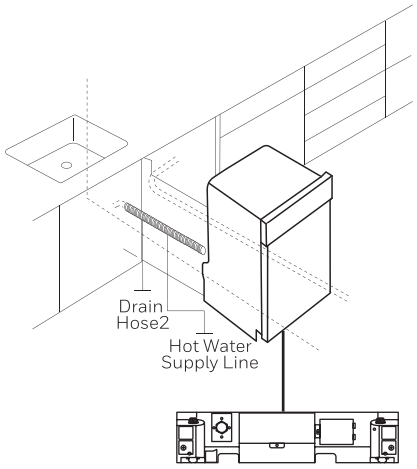

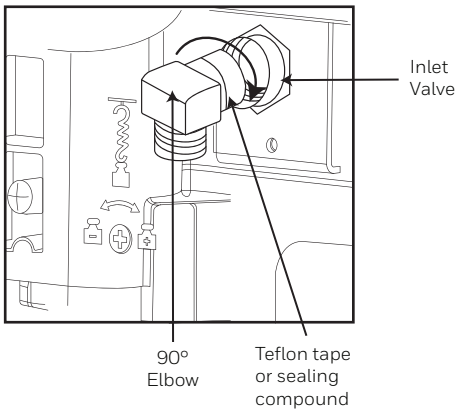

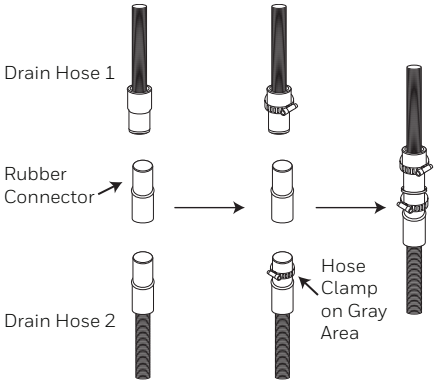

Do not overtighten the 90° Elbow. Doing so may damage the water inlet valve and cause a water leak.

3.7 Leveling The Dishwasher

Open the door and place the level against the top of the tub on the inside and check if the the dishwasher is level. If it is not level, rotate the leveling legs at the bottom front of the dishwasher until the dishwasher is level. See the first note below for instructions on adusting the height of the front legs.

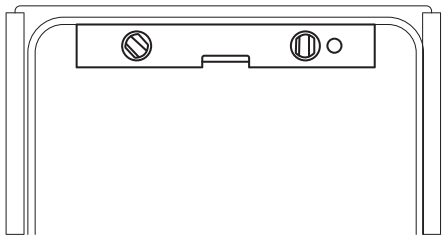

Use the level to check if the dishwasher is level front to back, as shown in the figure to the right.If the dishwasher is not level front to back, adjust the height of the rear leg until the dishwasher is level. See the second note below for instructions on adusting the the rear leg.

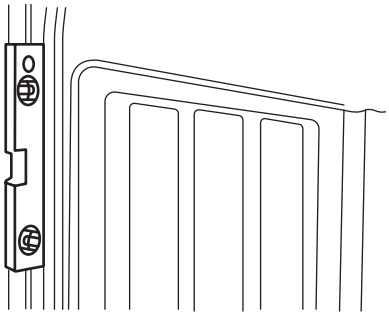

Open the door of the dishwasher and check if both the tub and door clearances are correct. If not, rotate the leveling legs on the bottom front of the dishwasher. You can also check this by placing a level against an inside front vertical surface of the tub.

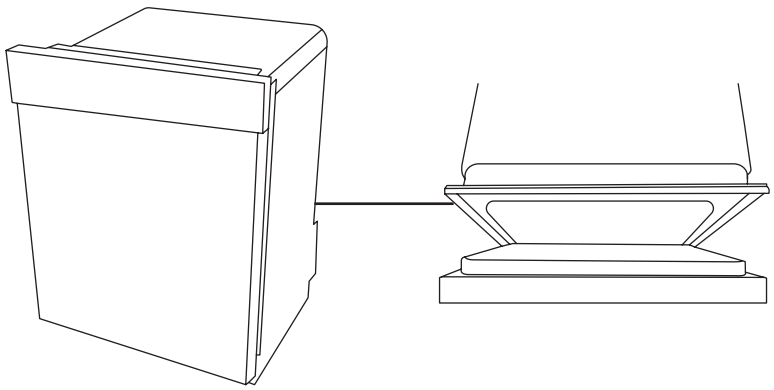

If the leveling legs are rotated to the right (counter clockwise), they are lossened and the front of the dishwasher is raised. And the maximum height be raised is about 50mm. If they are rotated to the left (clockwise), they are tightened and the front of the dishwasher is lowered.

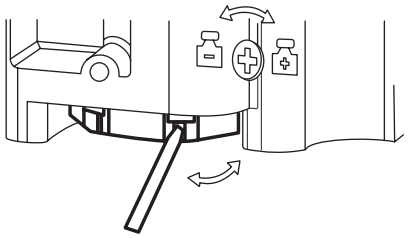

Before you move the dishwasher for installation, make sure to adjust the height of the legs so the legs are as short as possible. This prevents the legs from breaking. Level the dishwasher by adjusting the height of the legs after you have the dishwasher in place.

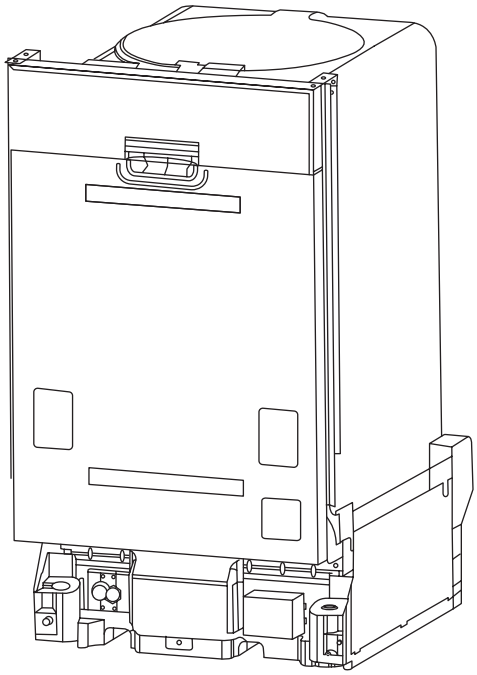

3.8 Securing The Dishwasher

You must fix the dishwasher to the countertop or cabinet side walls for additional stability and safety.

01 If the countertop is made of wood or the material will not be damaged by drilling, follow the instructions in 2-1 below.

If the countertop is made of granite, marble, or any other material that can be damaged by drilling, follow the Instructions in 2-2 below.

2-1 Put a large towel into the bottom of the dishwasher to prevent wood shavings or a dropped screw from falling into the dishwasher. Carefully drill screw holes Into the counter top bottom by passing the drill bit through a screw hole in each bracket, and then drilling into the counter top bottom beneath. Make sure the hole you drill is smaller than the diameter of the screw. Firstly, put the installation bracket into the slot of the side plane and tighten to the dishwasher with screw ST3.5*9. Secondly, insert the provided screws into the brackets, and then tighten to secure the dishwasher to the counter top.

2-2 Put a large towel into the bottom of the dishwasher to prevent wood shavings or a dropped screw from falling into the dishwasher. Remove the adjustment cap with the tip of a screwdriver. The caps are just inside the tub near the middle of the tub an both sides(Figure 9 on the next page).

Drill a hole into the sides of the kitchen cabinet on both sides by carefully passing a drill bit through the screw holes exposed by the removal of the spacer caps, and then drilling into the cabinet side beneath.

Make sure the hole you drill is smaller than the diameter of the screw.

Also make sure the drill bit does not strike the sides of the spacer cap holes. Firstly, put the installation bracket into the slot of the side plane and tighten to the dishwasher with screw

ST3.5*9. Secondly, Insert the provided screws into the holes, and then tighten to secure the dishwasher to the cabinet. Make sure the tub is not distorted by pressure from the screws.

If the tub is distorted, loosen the screws a little. Replace the tub spacer caps.

The screws or tub spacer cap may fall into the dishwasher while you are working with the door open. Cover the interior of the dishwasher with a towel to prevent any screws from falling into the dishwasher. If any foreign items such as a screw get into the dishwasher, it may cause noise, an abnormal operation, damage, or a malfunction.

Use a magnetic screwdriver to help prevent screws from falling into the dishwasher. If a foreign item such as a screw gets into the dishwasher and you are unable to remove it. the dishwasher needs to be disassembled. Contact a qualified service technician for this.

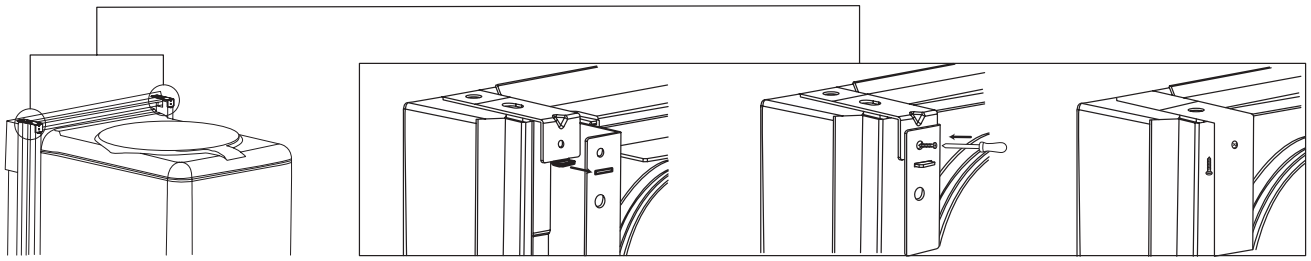

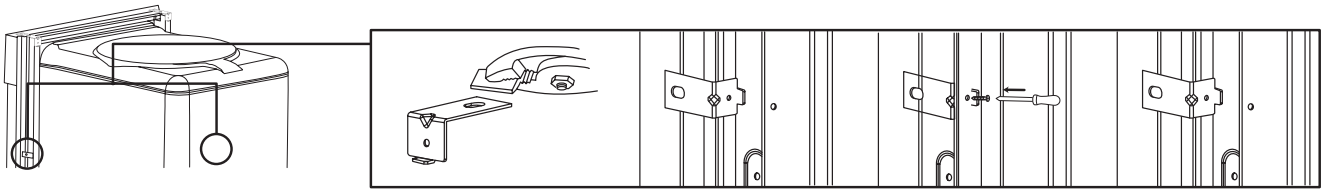

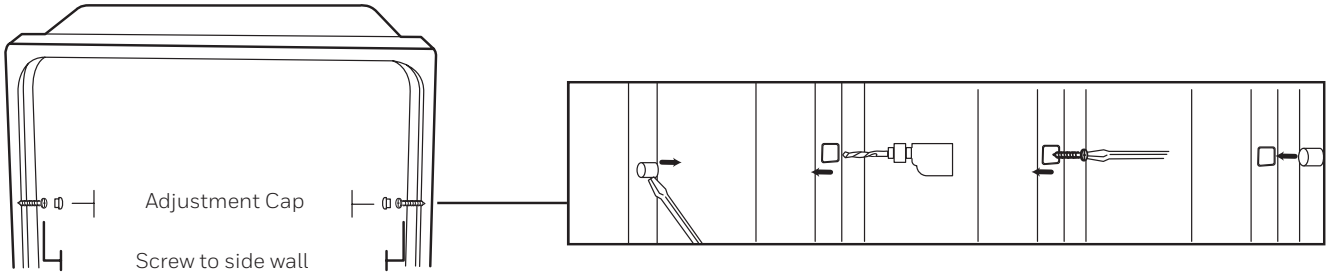

3.9 Connecting The Drain Hose

01 Check the parts on the sink to which the drain hose will be connected.

02 There are several ways to insert the drain hose into the drain hose connector of the sink, as shown in the following figures. You must connect the drain hose in accordance with the water pipe installation regulations in your region.

Without Disposal	With An Air Gap/ Without Disposal	Without An Air Gap
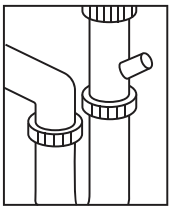	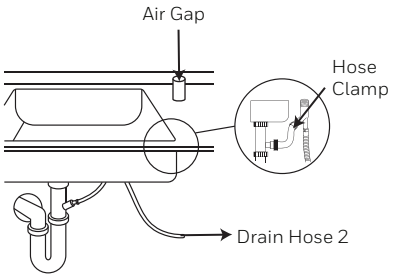	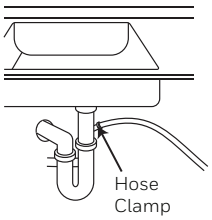

Case 2: With disposal.

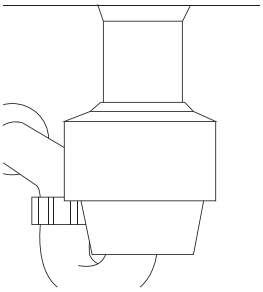

Disposal with air gap.

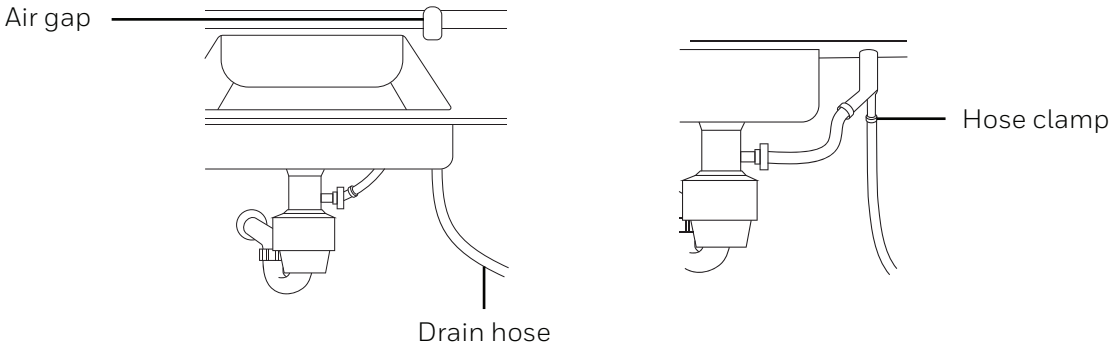

Disposal without air gap.

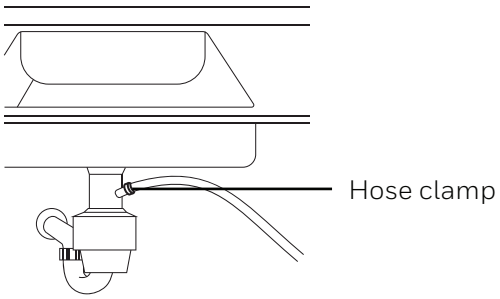

03 Check the size of the sink's drain hose connector (21mm). If the end of the drain hose does not fit onto the drain hose connector of the sink, use an adaptor purchasable at a plumbing/hardware supply store.

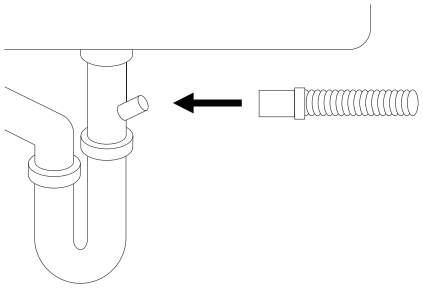

04 Check the size of the sink's drain hose connector (21mm). If the end of the drain hose does not fit onto the drain hose connector of the sink, use an adaptor purchasable at a plumbing/hardware supply store.

05 If there is no air gap, make sure to hang. the middle of the drain hose well above the sink cabinet base to prevent backflow.

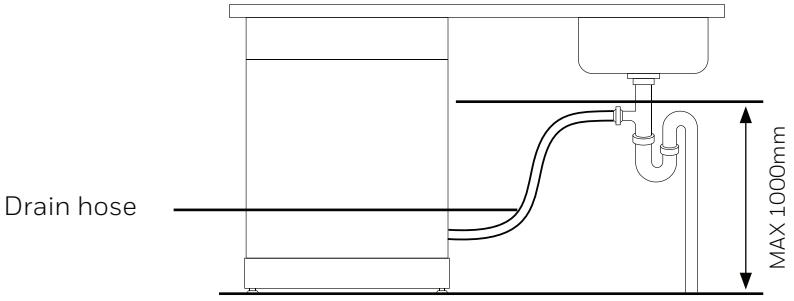

NOTE The top of the drain hose must be less than 1000mm.

06 When drilling a hole for the drain hose on the cabinet wall, take caution not to damage the drain hose by sharp edges of the hole. On wooden walls, use sand paper to soften the edges. On metal walls, use insulation tape or duct tape to cover the sharp edges around the hole.

07 Take caution not the damage the drain hose when installing the dishwasher on the floor, wall, or cabinet.

To prevent leaks or drainage problems, make sure the drain hose is not damaged, kinked, or twisted.

08 Do not cut the wrinkled area of the drain hose to fit the size. When arranging the drain hose, take caution not to contact on sharp edges of the cabinet or under-sink.

Be careful when cutting off the end of the drain hose as there is a risk of injury. Clean around the sink's drain connection so that it does not damage the hose. Check for any foreign items in the drain hose and remove them.

When arranging the drain hose, make sure the drain hose is not cut, torn, or broken by any sharp edges of the floor, the product itself, or the cabinet. A damaged drain hose causes a leak.

Secure the drain hose to the sink wall using cable ties or other fastening materials. Otherwise, the drain hose may bend at the end. causing a drainage problem or excessive supply of water.

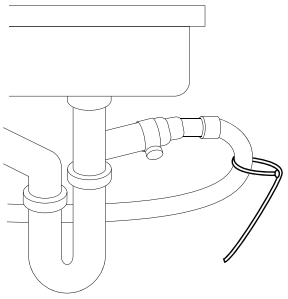

3.10 Wiring Connections

01 Before connecting the power cable to the dishwasher, make sure the circuit breaker is off.

02 In the junction box located at the front bottom right of the dishwasher, find the three power wires from the dishwasher including the grounding line.

03 Pass the power cable through the strain relief, and then into the junction box.

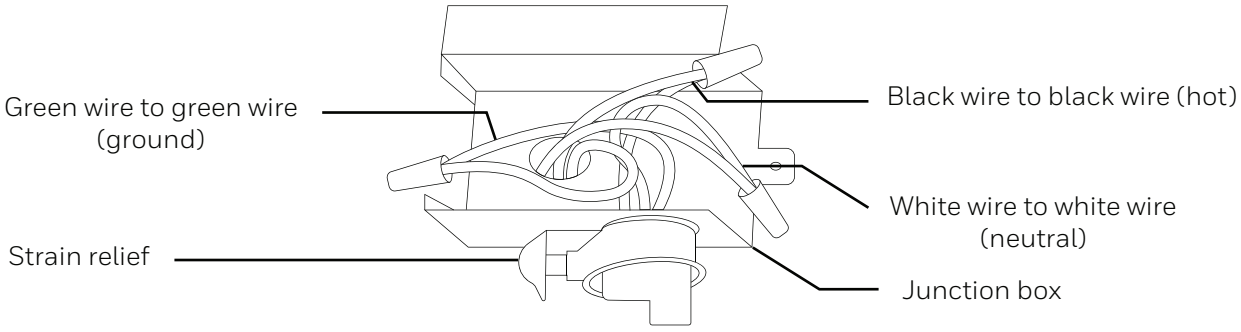

04 Connect the black wire of the dishwasher to the black wire of the power cable by inserting both into a wire nut and then rotating the wire connector.

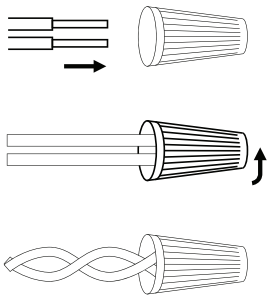

Connect the white wire to the white wire and the green to the green in the same manner.

05 Recheck each wire to ensure it is connected correctly and securely. Each colored wire should be connected to the corresponding wire of the same color. White should be connected to white, black to black, and green to green.

06 Replace the junction box cover on the dishwasher.

ELECTRICAL SHOCK HAZARD To avoid electrical shock, do not work on an energized circuit. Doing so could result in serious injury or death. Only qualified electricians should perform electrical work. Do not attempt any work on the dishwasher electric supply circuit until you are certain the circuit is de-energized.

FIRE HAZARD To avoid a fire hazard, make sure electrical work is properly installed. Only qualified electricians should perform electrical work.

3.11 Completing The Installation

01 Open the door and remove all foam, paper packaging, and unnecessary parts.

02 Turn on the circuit breaker you turned off before you began the installation.

03 Open the water supply valve to supply water to the dishwasher.

04 Turn on the dishwasher, and then select and run a cycle.

Check if the power turns on correctly and if there is any water leakage while the dishwasher is operating. If no errors occur while it is operating, turn off the dishwasher, and then go to Steps 5 & 6 below.

If an error has occurred, turn off the dishwasher, close the water supply valve, and then refer to the user manual or contact local service center.

CAUTION Make sure to check for water leakage on both ends of the water supply line and drain hose connector.

05 Confirm that the kick plate gasket is on the bottom of the kick plate. To install the kick plate with screw ST3.9*13.

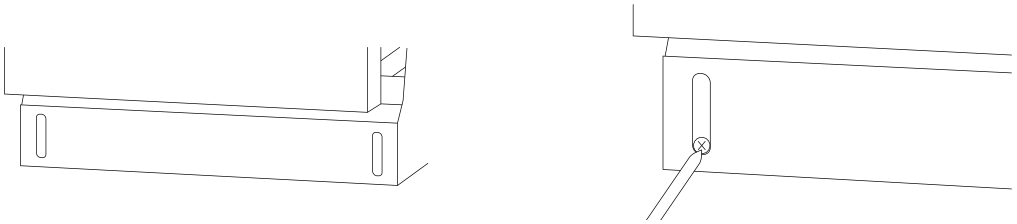

06 Tension adjustment of the door spring.

The door springs are set at the factory to the proper tension for the outer door. If the decoration door is installed, you will have to adjust the door spring tension.

Rotate the adjusting screw to drive the adjustor to strain or relax the steel cable.

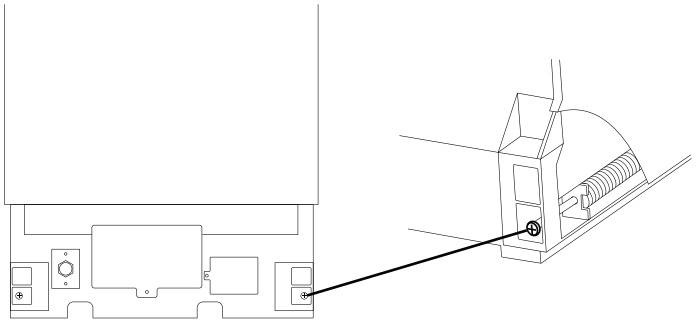

Door spring tension is correct when the door remains horizontal in the fully opened position, yet rises to a close with the slight lift of a finger.

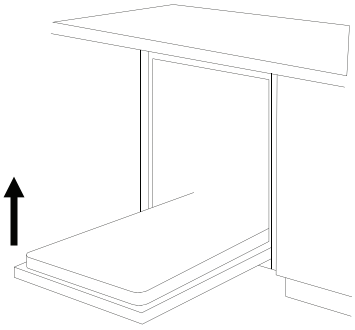

4 FEATURES OF YOUR NEW DISHWASHER

4.1 Components

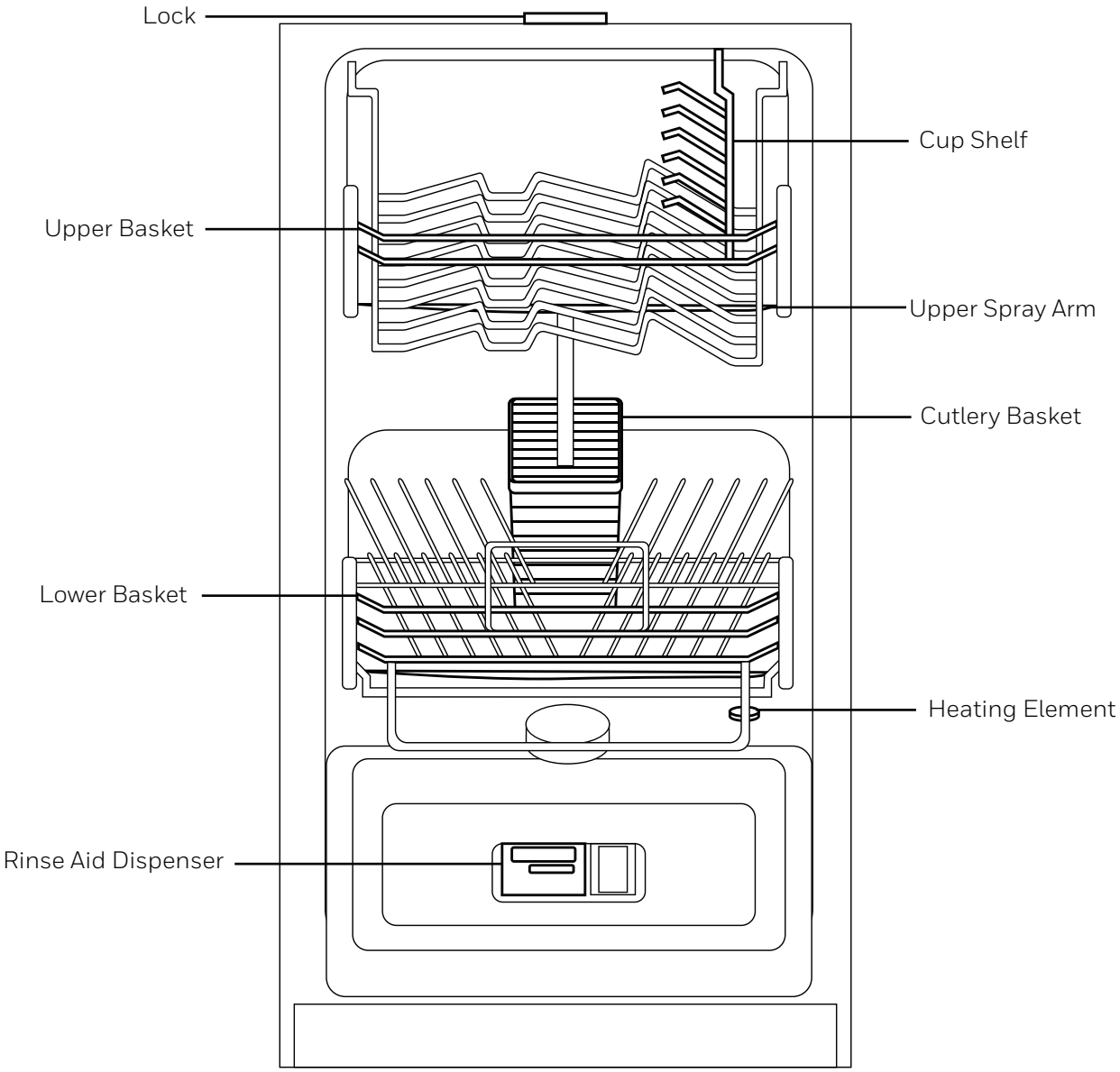

4.2 Filter System

Your dishwasher has a multiple Filter System. In the System there are three mesh filters. It can separate soiled water and clean water in different chambers.

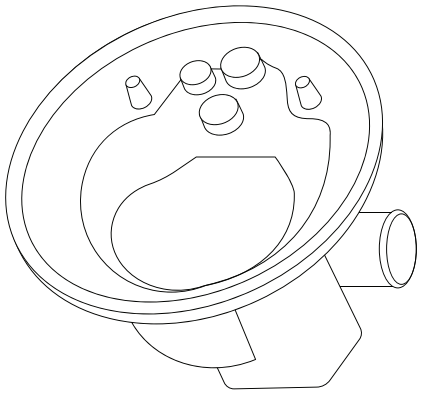

The multiple filter system helps your dishwasher to get better performance with less water and less energy.

4.3 Smart Wash System

Your dishwasher has Smart Wash System. When a partial load of lightly soiled dishes is placed in the unit, a wash cycle similar to a short wash will automatically be performed. When a full load of heavily soiled dishes is placed in the unit, a heavy wash cycle will automatically be performed. it can determine the type of cycle required to clean the dishes and will clean more efficiently every time.

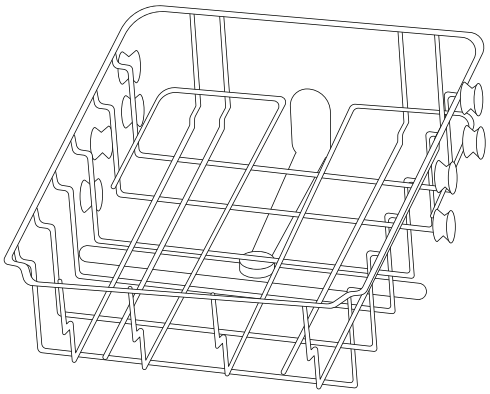

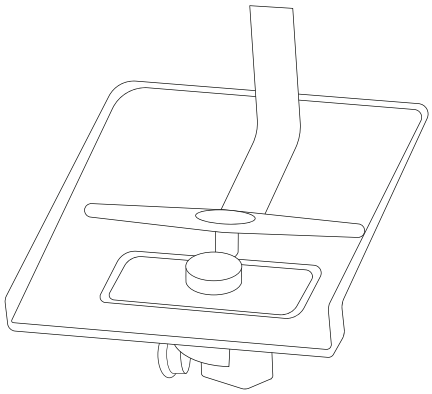

How Your Dishwasher Cleans

Your dishwasher cleans by spraying a mixture of hot water and detergent through the spray arms against soiled surfaces.

The dishwasher fills with water covering the filter area. Water is then pumped through the multiple filter and spray arms. Separated soil particles go down the drain as the water is pumped out and replaced with clean water.

The number of water fills will vary with the cycle being used.

4.4 Preparing And Loading The Dishes

01 Dish Preparation Scrape away large pieces of food, bones, pits, toothpicks, etc. The continuously filtered wash system will remove the remaining food particles. Burned-onfoods should be loosened before loading. Empty liquids from glasses and cups. Foods such as mustard, mayonnaise, vinegar, lemon juice and tomato based products may cause discoloration of stainless steel and plastics if allowed to sit for a long period of time.

Unless the dishwasher is to be operated at once it is best to rinse off these food soils. If the dishwasher drains into a food disposer, be sure disposer is completely empty before starting dishwasher.

02 Loading the Upper Basket The upper basket is designed for cups, glasses, small plates, bowls and plastic items marked dishwasher safe etc. For best results, place the bowls, cups, glasses, sauce pans with soiled surface facing down or toward the center. Tilt slightly for better drainage.

03 Loading the Lower Basket The bottom basket is designed to load plates, soup bowls, plates, saucers and cookware. The adjustable basket space will allow you to load items with a maximum height of 11 inches. The fold-down tines in the bottom basket make it easy to load those extra large and hard-to-fit items. The tines may be left up for normal use or folded down for more flexible loading. Fold down for more space to load large pots or pans.



Make sure the loaded dishes do not interfere with the rotation of the middle spray arm, which is located at the bottom of the upper basket. (Check this by rotating the middle spray arm by hand.)



Large items should be placed along the edge so they do not interfere with the middle spray arm rotation, and make sure they not prevent the detergent dispenser from opening. Large items should be turned so that the inside faces downward, and make sure these items do not interfere with the lower spray arm rotation.

4.5 Loading the Upper Basket

The lower basket has been especially designed for dinner dishes, soup bowls, plates, pots, lids, casserole dishes, and plates. Load large items such as pans and pots into the dishwasher so their open sides face downwards. We recommend loading cups, stemware, and small plates into the upper basket.

See the recommended loading patterns below.

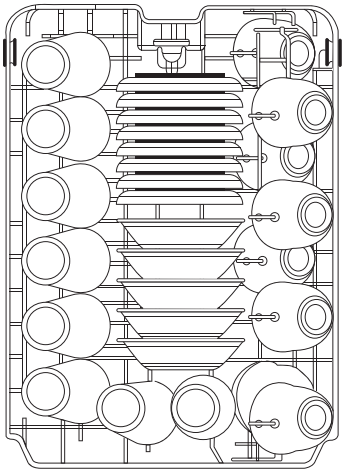

8 place setting

4.6 Loading the Lower Basket

The upper basket has been designed for small plates, mugs, glasses, and plastic items marked “dishwasher safe”. Load your plates into the dishwasher in two half rows, so that the front of each plate faces the back of the plate in front of it, and the open sides of the plates at the center of the dishwasher face each other. See the illustrations below.

Make sure the loaded dishes do not interfere with the rotation of the nozzle which is located at the bottom of the upper basket. (Check this by rotating the nozzle by hand.) When loading dishes, pull the upper basket out suff iciently so you can load it without striking the counter

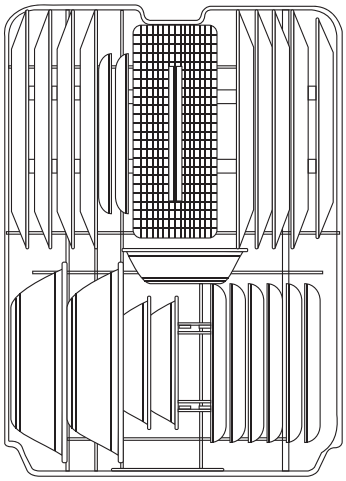

8 place setting

4.7 Loading the Silverware Basket

The silverware basket can be divided into three separate modules that can be used in both upper and lower racks

1. Spoons 2. Knives 3. Salad forks 4. Forks 5. Large spoons 6. Large forks

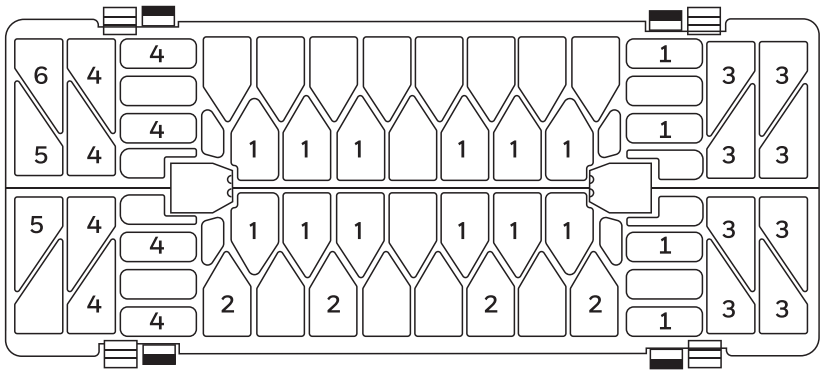

1. Do not let item extend though bottom.

2. Be sure nothing protrudes though bottom of the basket or rack to block the lower spray arm

4.8 Adding a Dish

To add or remove items after wash cycle starts:

1. Open door slightly and wait a few seconds until wash action stops

before completely opening.

2. Add the item.

3. Close the door firmly to latch within 4 secs, then cycle will automatically resume.

TO AVOID BURN INJURY: Slightly open door and wait until spray arms and wash action stop. Hot water may splash out of dishwasher. Failure to do so may result in injury

4.9 Filling The Rinse Aid Dispenser

Rinse aid greatly improves drying and reduces water spots and filming. Without rinse aid your dishes and dishwasher interior will have excessive moisture. The Heated Dry option will not perform as well without rinse aid. The rinse aid dispenser, located next to the Detergent cup, automatically releases a measured amount of rinse aid during the last rinse. If the rinse aid is low, the Rinse Aid light is illuminated at the beginning and end of the cycle indicating that it is time to refill.

4.9 Filling The Rinse Aid Dispenser

Your dishwasher is designed to use a liquid rinse aid. The use of rinse greatly improves drying performance after the final rinse. Do not use a solid or bar-type rinse aid. Under normal conditions, the rinse aid will last approximately one month. It is best to keep it full, but do not over fill.

01 Open the detergent dispenser c ap by pushing the detergent dispenser release catch.

The flap is always open at the end of a dishwashing cycle.

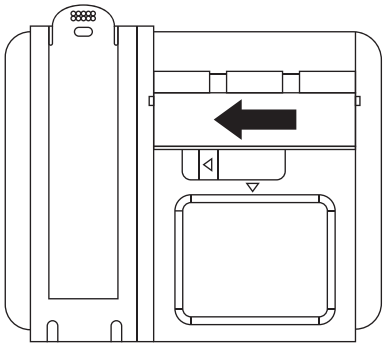

02 Add the recommended amount of detergent to the main wash detergent compartment.

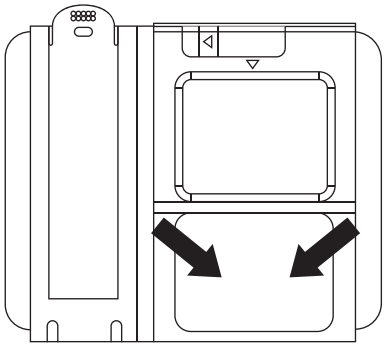

03 Close the flap and then pressing it down.

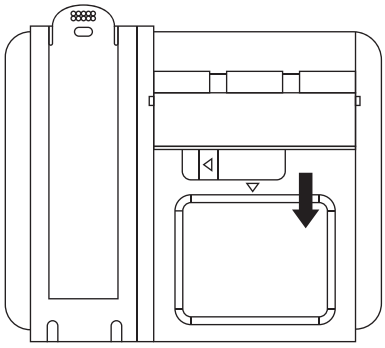

4.10 Filling the rinse aid reservoir

Your dishwasher has been designed to use liquid rinse aid only.

Using a powdered rinse aid will clog the reservoir opening and cause the dishwasher to malfunction.

Rinse aid improves the drying performance of the dishwasher.

01 Remove the rinse aid reservoir cap by rotating it counterclockwise.

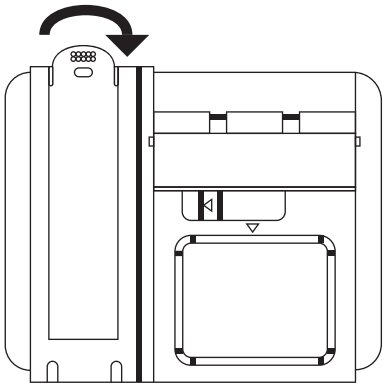

Do not add regular detergent to the rinse aid reservoir.

02 Fill the rinse aid reservoir with rinse aid.
Use the viewing port when fil ling the rinse aid reservoir.

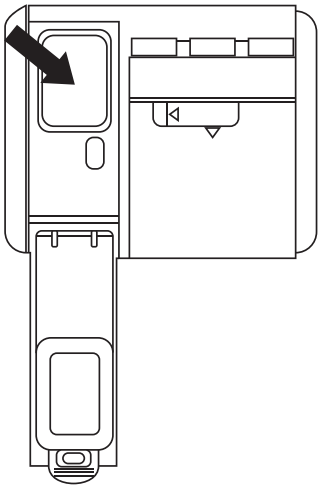

Do not fill the reservoir above the full level indicator. Excess rinse aid can over flow during the wash cycle.

4.10 Filling the rinse aid reservoir

03 Add the rinse aid if the LED screen shows “LSb”. rinse aid left.



04 Close the rinse aid reservoir cap by rotating it clockwise.

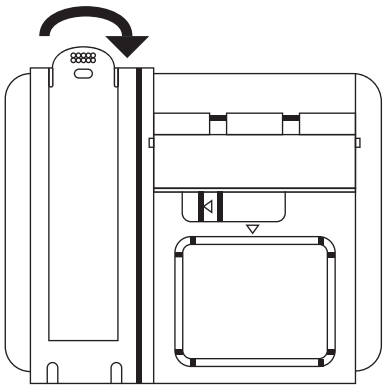

5 OPERATING INSTRUCTIONS

5.1 How your dishwasher cleans

Your dishwasher cleans by spraying a mixture of hot water and detergent through the spray arms against soiled surfaces. The dishwasher fills with water covering the filter area. Water is then pumped through the multiple filter and spray arms. Separated soil particles go down the drain as the water is pumped out and replaced with clean water. The number of water fills will vary with the cycle being used.

5.2 Getting Started

1. Load the dishwasher (See Dish Preparation and Loading sections).

2. Add detergent (See Filling the detergent dispenser).

3. Add rinse aid (See Filling the rinse aid dispenser).

4. Close door.

5. Select desired CYCLE (See Cycle Chart).

6. Select desired OPTIONS (See Control Panel). The indicator light above the pad will glow when selected.

7. Run the hot water faucet nearest the dishwasher until the water is hot, then turn it off.

8. To start, press Start/Cancel (See Control Panel).

Note: Your dishwasher has the controls mounted in the front of the door. The door should be closed first if you want to operate the machine.

Wash Cycle Selections

Cycle times are approximate and will vary with the options selected. Hot water is necessary to activate the detergent and melt fatty food soils. An automatic sensor will check the incoming water temperature. If it is not at the appropriate temperature the timer will delay the cycle to allow automatic water heating during the main wash. When the HI-TEMP wash is selected an even higher temperature will be assured to handle heavier soil loads.

Control Panel

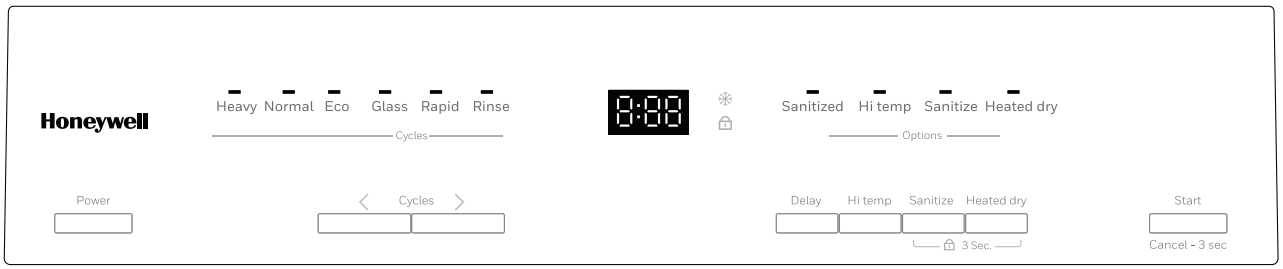

Power
press this button to power on or power off your dishwasher.

5.3 Start/Cancel

Open the door to select the desired cycle and options, touch the Start/Cancel button and close the door within 4 seconds to start the cycle or begin the delay countdown.

To cancel and reset the program during the cycle, open the door, and touch Start/ Cancel for 3 seconds. Close the door and dishwasher will start a 60 second drain.

5.4 Wash Cycle Selections

HEAVY This cycle is for hard-to-clean, heavily soiled dishes, pots, pans, and dishes.

NORMAL This is standard program. It is for regularly soiled dinner dishes or silverware.

ECO It is suitable to clean normally soiled tableware and it is the most effcient program in terms of it's combined energy and water consumption for that type of tableware.

GLASS For lightly soiled loads, such as glasses, crystal and fine china.

RAPID A shorter wash for lightly soiled loads that do not need drying.

RINSE Use for rinsing dishes, glasses and silverware that will not be washed right away.

5.5 Cycles

After closing the door. You can use these two buttons ">" "<" to select different cycles.

5.6 Options

Delay Press these buttons to set the delayed hours for washing. You can delay the start of washing up to 24 hours. One press on this button delays the start of washing by 1 hour between 1 to 8 hours, and by 4 hours between 9 to 24 hours (i.e. 12h,16h, 20h, 24h).

This option can increase the water temperature in the main wash and rinse. This increase in water temperature helps the dishwasher detergent remove food, grease and soil from dishes more effectively . The option is not Eco,Glass, Rapid&Rinse.

5.6 Options

High Temp - This option can increase the water temperature in the main wash and rinse. This increase in water temperature helps the dishwasher detergent remove food, grease and soil from dishes more effectively . The option is not Eco,Glass, Rapid&Rinse.

Sanitize - To sanitize your dishes and glassware, select the Sanitize option. When selected, the light above the pad will turn on and remain on until end of cycle. The water temperature in the final rinse will be raised. The option is not available in

“Glass & Rinse”.

Heating Dry - This option is available on all cycles except rinse only. The Heated Dry option in combination with rinse aid will enhance drying performance. You can turn off by pressing Heated Dry so that the light goes off .

Child Lock - This option allows you to lock the buttons on the control panel, except the Power button, so children can not accidently start the dishwasher by pressing the buttons on the panel. To lock or unlock the buttons on the control panel, press the Sanitize and Heated dry button for 3 seconds.

5.7 Indicator Light

Sanitize - Sanitize When “sanitize” option is selected, the temperature of the water will reach a maximum of 70°C (158°F).

Certified residential dishwashers are not intended for licensed food establishments. The sanitize cycle is NSF certified.

Warning: The sanitize option is not available with “Glass” and “Rinse”.

❄ If the “❄” indicator is lit, it means the dishwasher is low on dishwasher rinse aid and requires a refill.

5.8 Screen

Start/Cancel 3 sec: After completing cycle and function selection or delay time setting, press this button to start or pause. When the washing program is running, press this button for 3 seconds to cancel the current program and function.

Display window: This displays the remained hours and minutes of the running cycle, delay hours and error codes etc.

5.9 Status Indicators

H:01- H:24
If the Delay Start option is selected the number of delay start hours shows in the status window.

2:25-0 :00
After the machine starts operation, the remaining time of the selected cycle will be shown in the window.

Note: The remaining time could suddenly increase or drop several minutes. This means the Smart Sensor has checked the soil level and determined if additional water fills are needed or if water fills can be deleted.

Error Indication: In certain situations which are critical to the machines function and safe oper-ation, the control shall shut down and indicate an errorcode (See Error Codes on page 63).

5.10 Cycle Chart

Program	Cycle Description	Water (L)	Cycle Time (min)
Heavy Wash	Pre-Wash Pre-Wash Main Wash (60°C) Rinse Rinse Last Rinse (65°C) Drying	18.5L/4.9G	155
Normal Wash	Pre-Wash Pre-Wash Main Wash (45-60°C) Rinse Rinse Last Rinse (58°C) Drying	9.5-18.5L/ 2.5~4.9G	125~145
ECO	Pre-Wash Main Wash (48°C) Rinse Rinse Last Rinse (58°C) Drying	15.5L/4.1G	130
Glass	Pre-Wash Main Wash (50°C) Rinse Rinse Last Rinse (58°C) Drying	15.5L/4.1G	105
Rapid	Pre Wash (40°C) Main Wash (60°C) Rinse (55°C) Last Rinse (55°C)	12.5L/3.3G	60
Rinse	Pre Wash Main Wash	6.7L/1.8G	20

6 SERVICING

6.1 Component Location Views

Front View

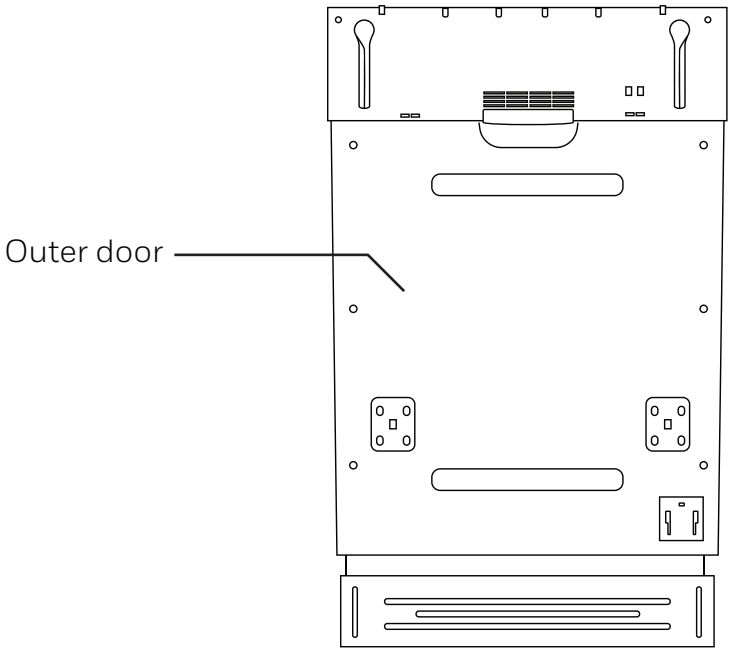

Top View

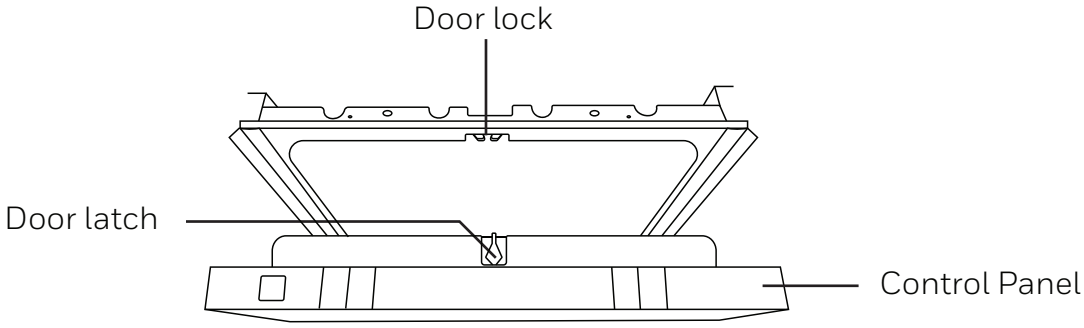

6.1 Component Location Views (cont'd)

Interior View

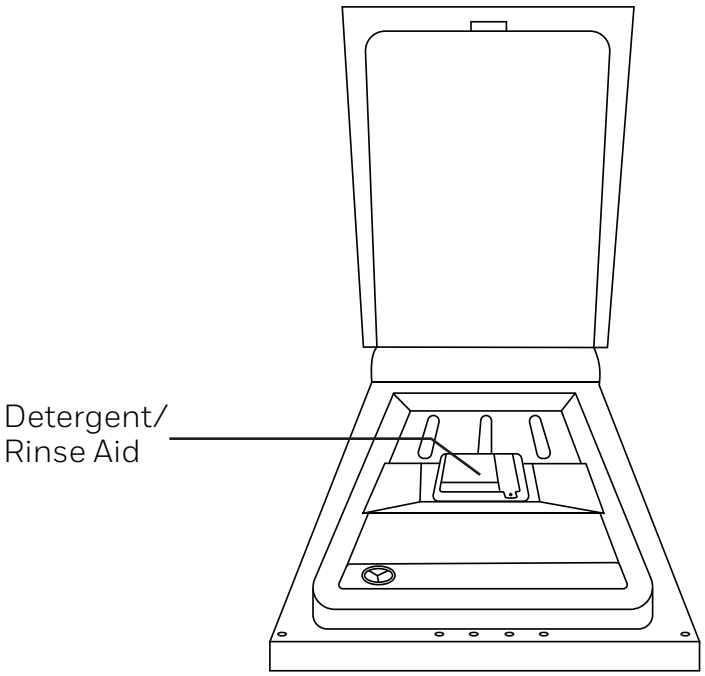

Detergent/Rinse Aid Compartment View

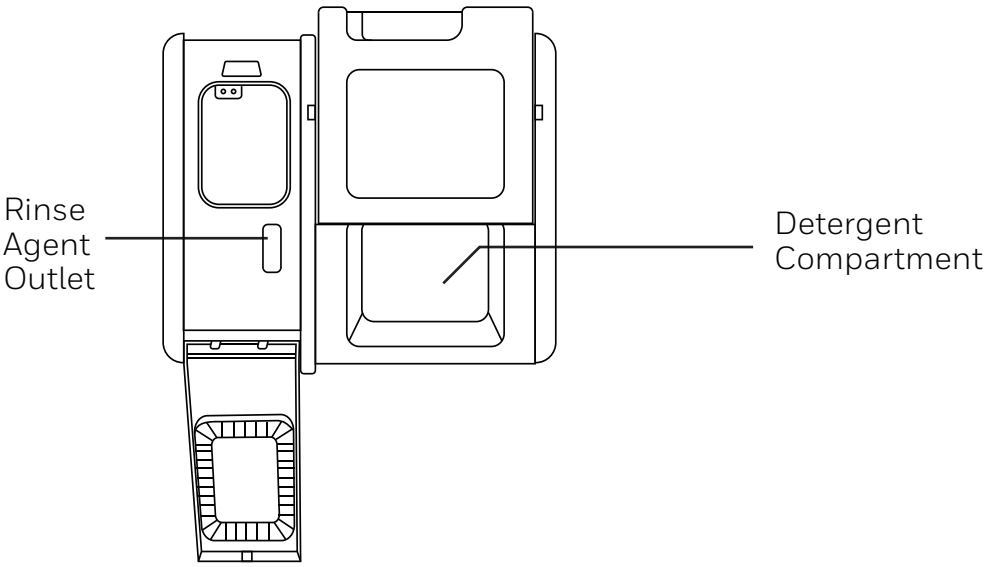

6.1 Component Location Views (cont'd)

Interior View of Basin

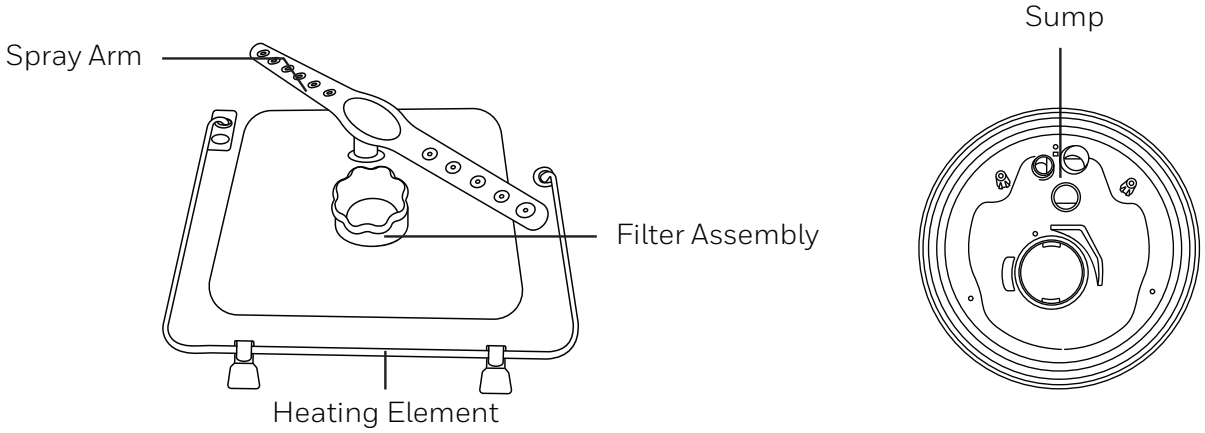

Light Side View

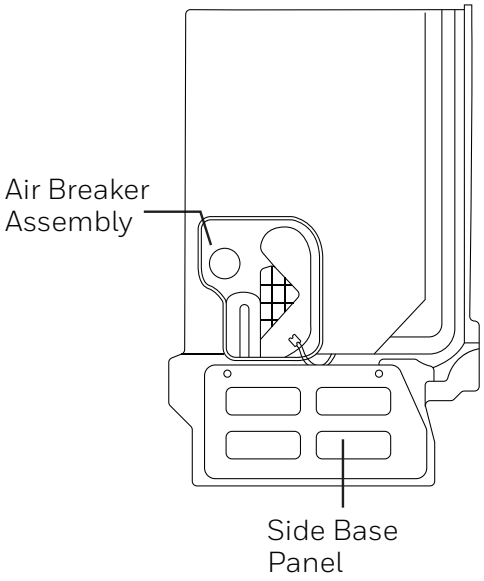

Bottom View

Note: Drain hose is shown in shipping configuration

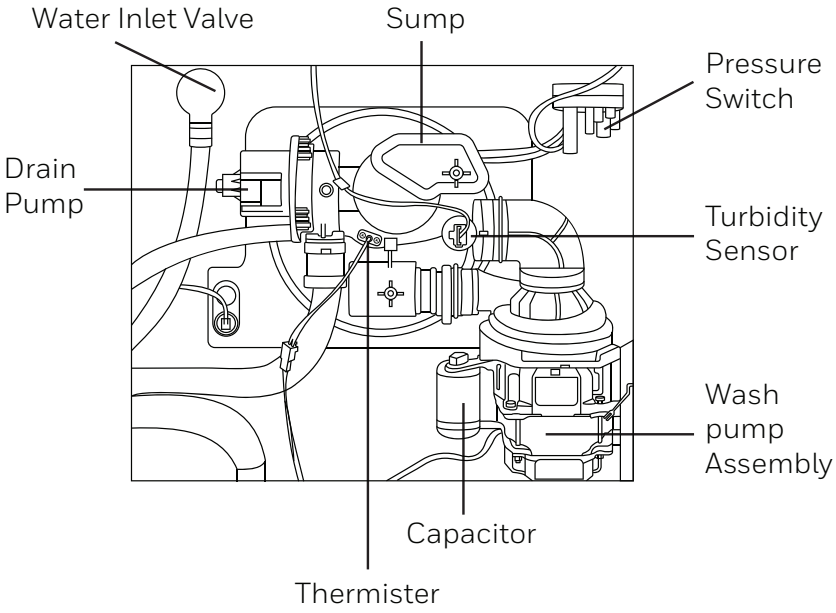

6.2 Control Board Connector Locator View

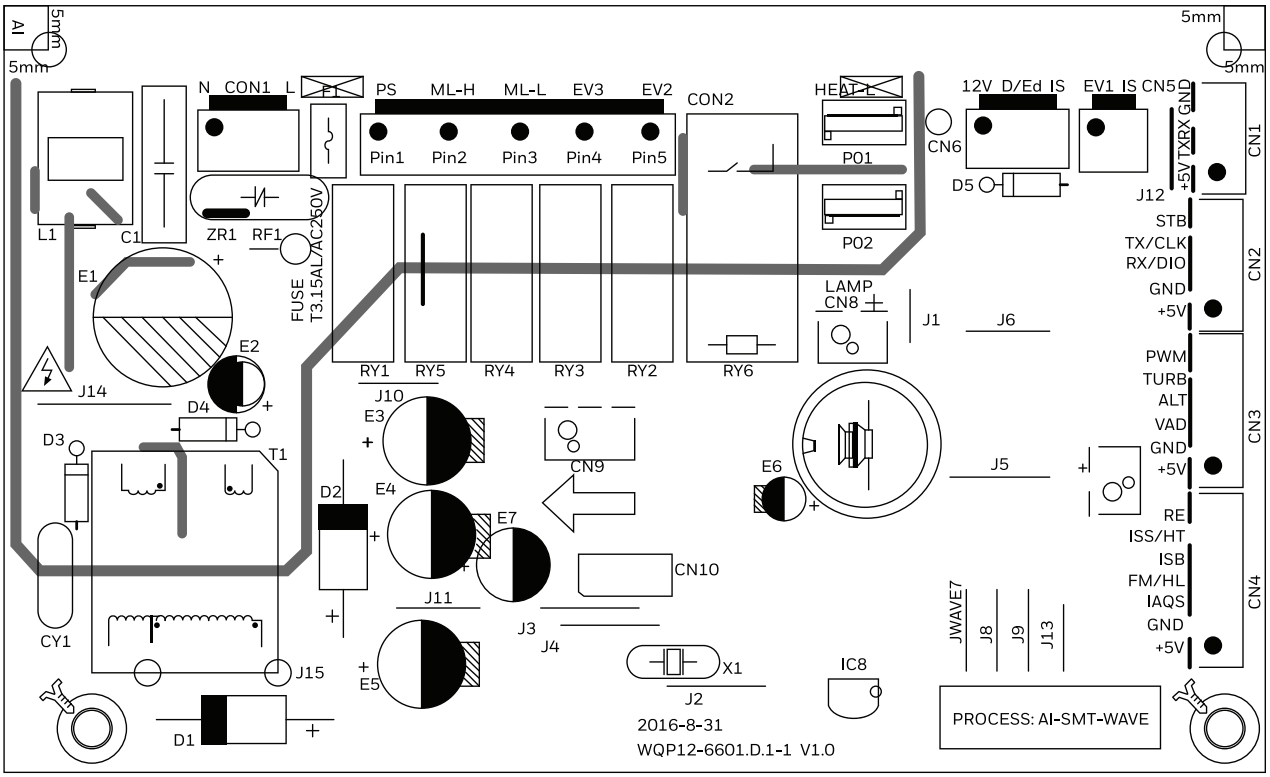

CON1 L-N

CON2 120VAV output

- Pin1=Drain pump
- Pin2=High speed
- Pin3=Low speed
- Pin4=Not used
- Pin5=Not used

PO1 PO2 Heater

Cn1 Not used

CN2 Connecter to display board

CN3 Turbidity

CN4 flow metre / water flood detective connection

CN5 water valve and door switch

CN6 dispenser and door switch

CN7 not used

CN8 not used

6.3 Dishwasher Components

Outer Door

The outer door panel covers the door to the dishwasher and must he removed to access the detergent/rinse module, bottom door seal.

To remove the outer door panel, first remove 6 screws, and then lower the door panel form the control panel.

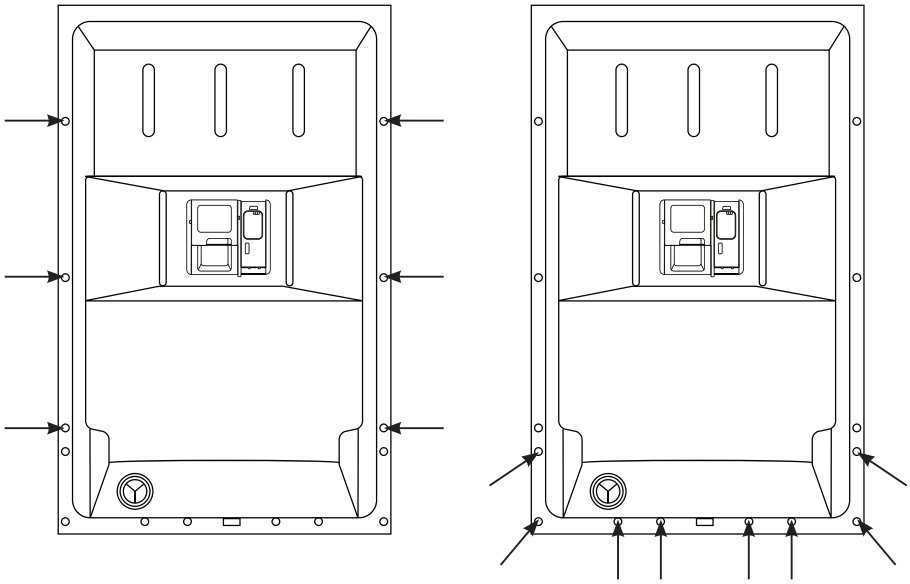

Control Panel

The control panel consists of PCB user interface board, to remove the control panel:

1. Disconnect the power supply to the dishwasher.
2. Remove 8 screws.

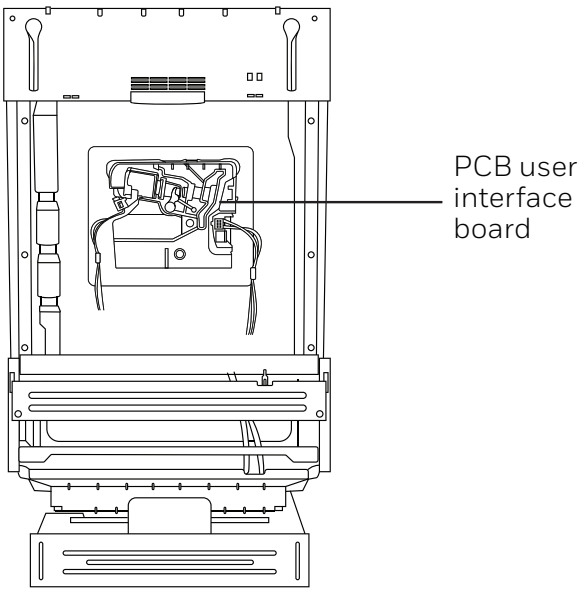

6.4 Door Switch assembly

Door Switch Assembly

The door switch assembly consists of door lock and door latch. The door lock connects or disconnects the line (hot) side of 12 VAC.

WARNING: Power remains applied to the controller location at CN2, Pin 1. while the door is open (unlatched).

To remove the door switch assembly:

1. Disconnect the power supply to the dishwasher
2. Disconnect the 2 wiring harnesses from the door switch.

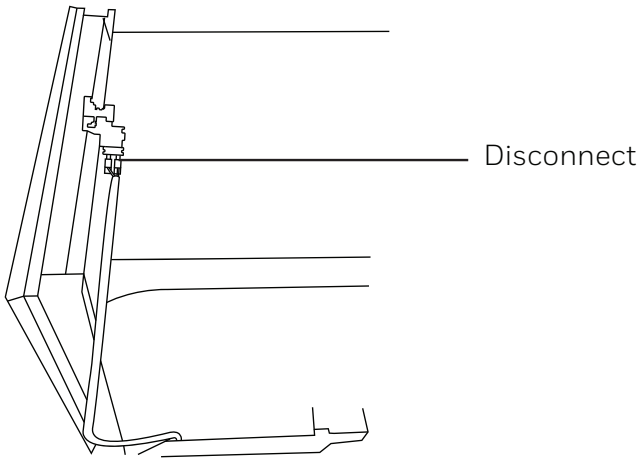

3. Remove 2 screws.

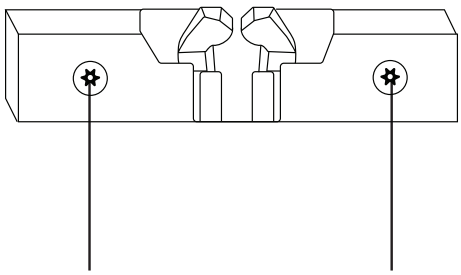

6.5 Detergent/Rinse Module

Detergent/Rinse Module

The outer door must be removed to access the detergent/rinse module. (See Outer Door.) The detergent /rinse module is connected by 4 wires and held in place by 10 snap joints. The detergent/rinse module operates on 12 VAC.

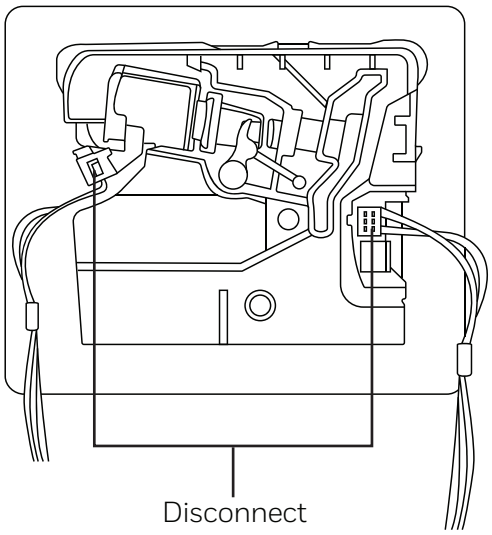

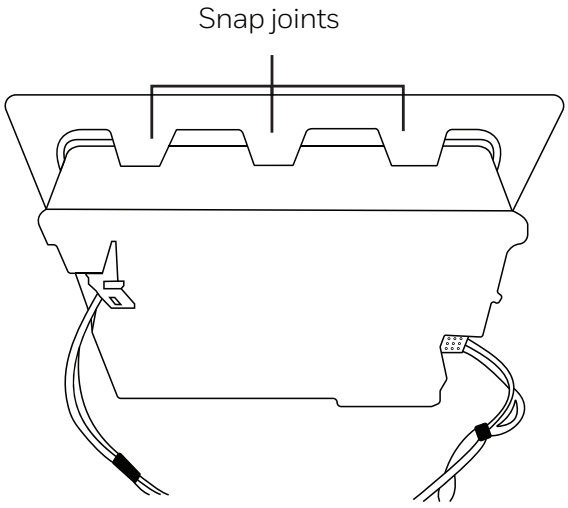

The detergent/rinse module automatically dispenses both the detergent and the rinse agent at the appropriate times. The module is activated five times during a wash cycle. Detergent is dispensed at the beginning of the main wash cycle for one time and rinse agent at the beginning of the final rinse for four times.

To remove and install the detergent/rinse module:

1. Use the screwdriver to move out the snap joint and then push in.(remove)

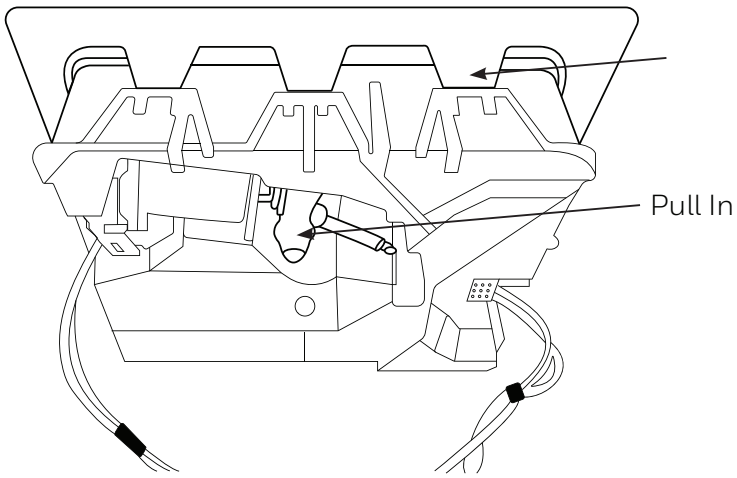

6.5 Detergent/Rinse Module

To remove and install the detergent/rinse module:

2. Press snap joint inward.(install)

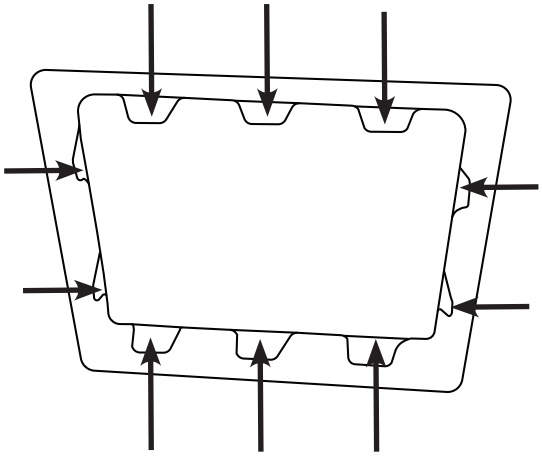

3. Press detergent/rinse module inward.(install)

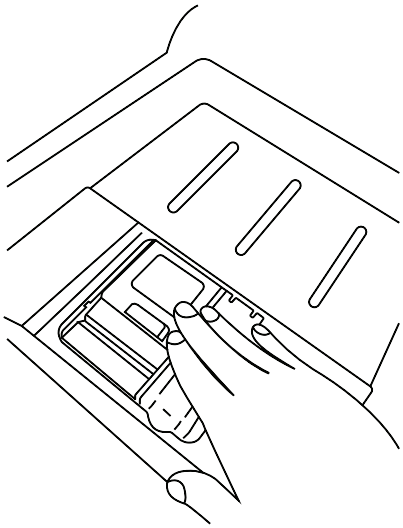

6.6 Inner Door Panel

To remove and install the detergent/rinse module:

1. Disconnect power.

2.Remove the control panel. (See Control Panel.

3. Remove the detergent/rinse module. (See Detergent/Rinse Module.)

4. Remove the 2 screws from the hinge plate.

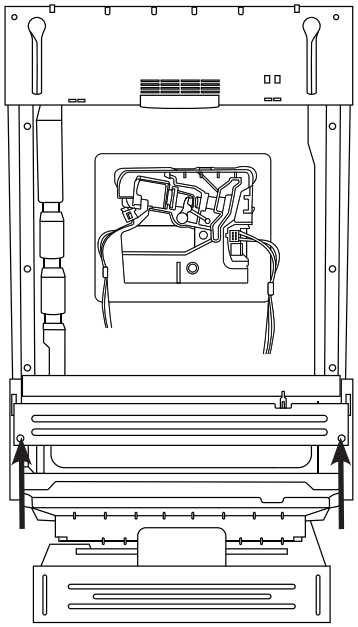

5. Remove the 2 screws from the base side panel on each side.

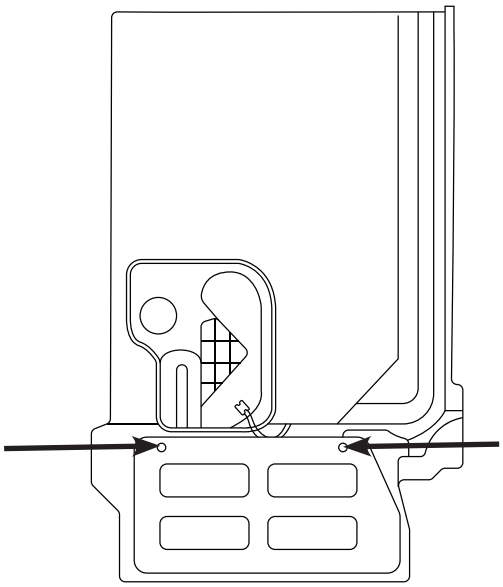

6.6 Inner Door Panel (cont'd)

To remove and install the detergent/rinse module:

6. Disconnect door spring and door cable.

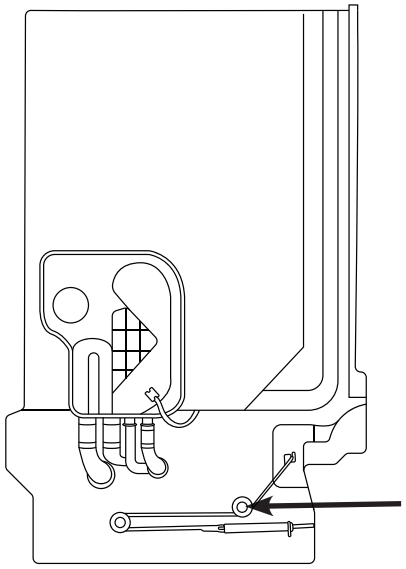

7. Open the inner door of 10°, and lift the door until the door hinge seperate from the pin.

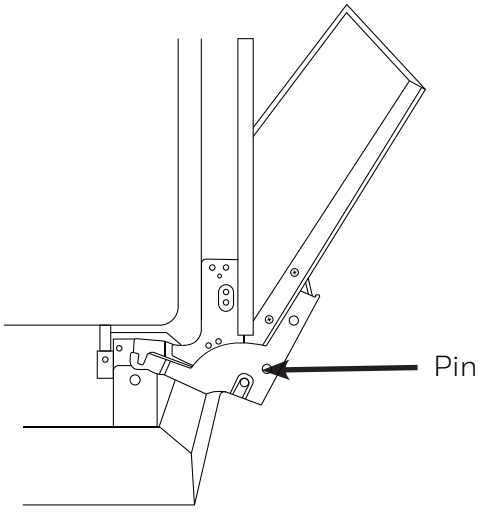

6.7 Door Bottom Seal

The door bottom seal prevents water leakage by sealing between the bottom of the door and the tub. It is not replaced as a separate part on this dishwasher. It is replaced as part of the inner door panel. (See Inner Door Panel.)

6.8 Tub Gasket and Trim

The dishwasher tub seal prevents water leakage.The seal is fitted in a seal channel that lines the rim of the dishwasher tub. To remove the tub seal or trim:

1. Open the dishwasher door.

2. Remove the dishwasher tub seal by grasping one end of the seal to peel it away from the seal channel.

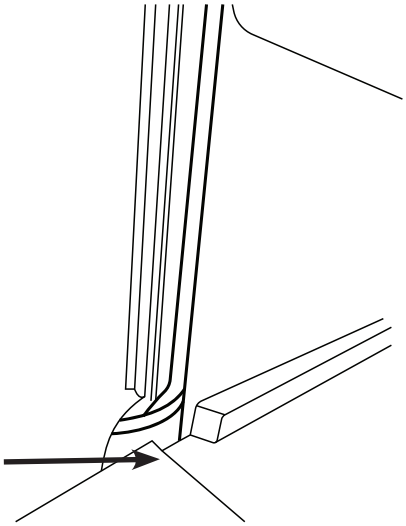

3. Remove the 2 screws and then pulling the trim straight off the lip of the tub.

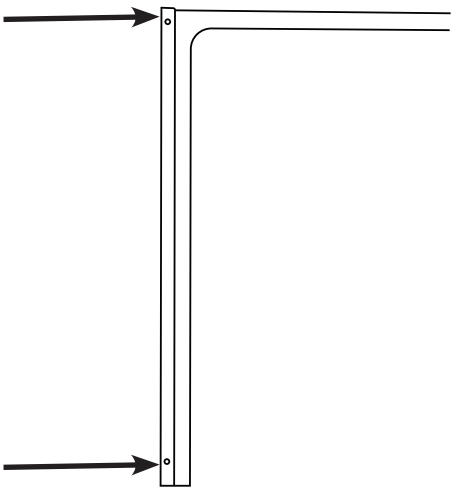

4. Reverse the above procedures to install.

Note: When installing the tub seal, make sure it is seated properly in the seal channel. Run your finger over the seal to make sure it is smooth and even for a proper seal. A correctly installed gasket will have both ends of the gasket equally distant from the bottom of the tub.

6.9 Air Breaker Assembly

The Air breaker assembly is mounted on the left side of the tub. Its purpose is to provide a method of supplying water for the wash and rinse cycles. The air gap prevents the siphoning of wash water from flowing back into the water supply system, provent the water pressure drop to less than atmospheric pressure.

The Air breaker assembly also allows air into the tub for drying dishware.

To remove the air breaker assembly:

1. Disconnect the power.

2. Remove the base side panel.

3. Disconnect 1 wire harness from the air breaker assembly.

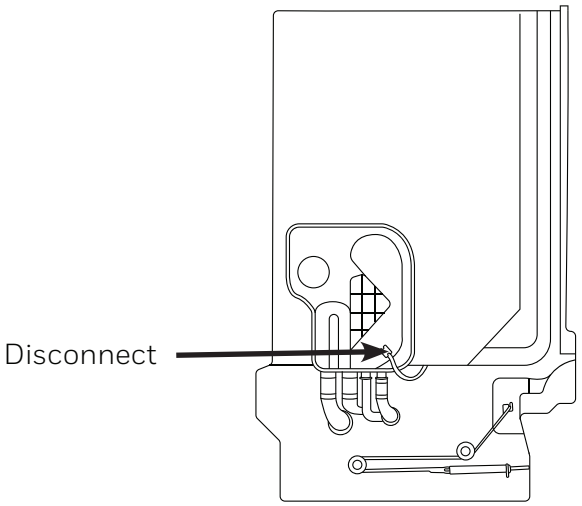

4. Open the door and rotate the Air breaker nut and remove it from the air breaker assembly.

5. Remove the 4 clamps from the pipes.

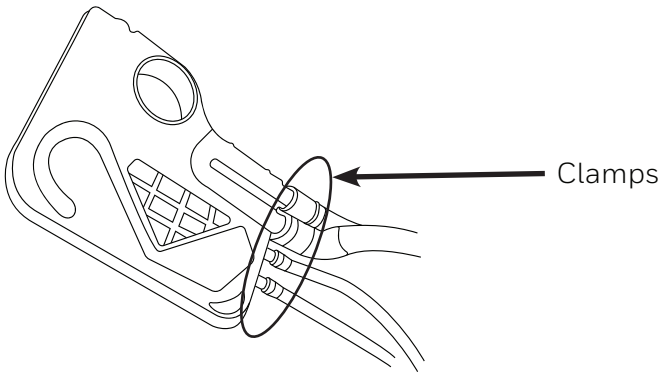

6.10 Nozzle Duct

To remove the nozzle duct:

1. Disconnect power.

2. Open the door, and remove the 2 screws on the lower spray seat.

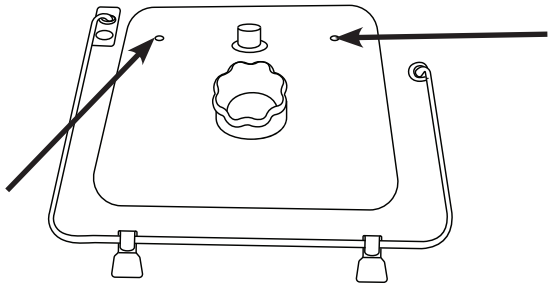

3. Release the snap joints shown in the figure. Then take out the nozzle duct and lower spray seat.

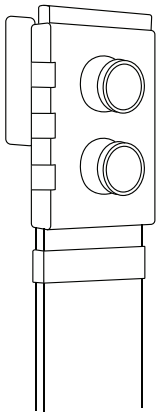

6.11 PCB

Printed Circuit Board is the center of the dishwasher, which receive and process the signal from components, send order to components and deal with the feedback information, etc.

To remove the PCB Power Board:

The PCB can be removed from the protecting box at the bottom of the machine.

1. Disconnect the power.

2. Take out cutlery basket, basket and filter system

3. Lay the dishwasher on its back.

6.11 PCB (cont'd)

4. Remove 2 screws on the kick board.

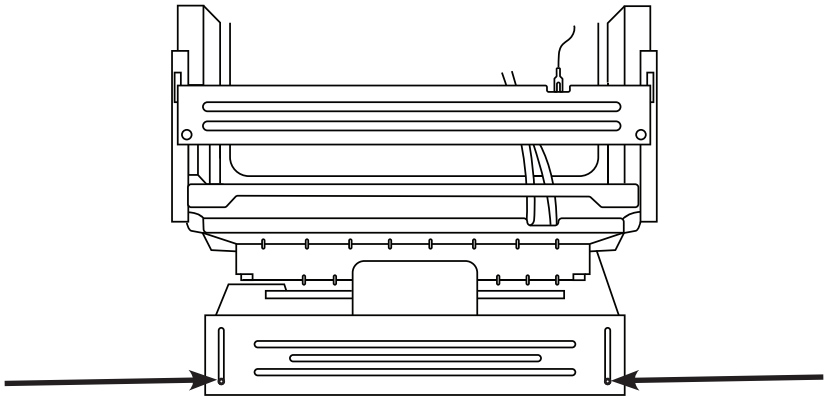

5. Remove 1 screw on the PCB protecting box.

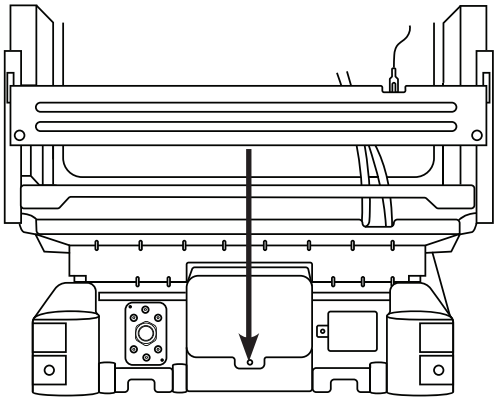

6. Remove 2 snap-fit that attach PCB to the PCB board.

7. Disconnect the wire harnesses from the PCB.

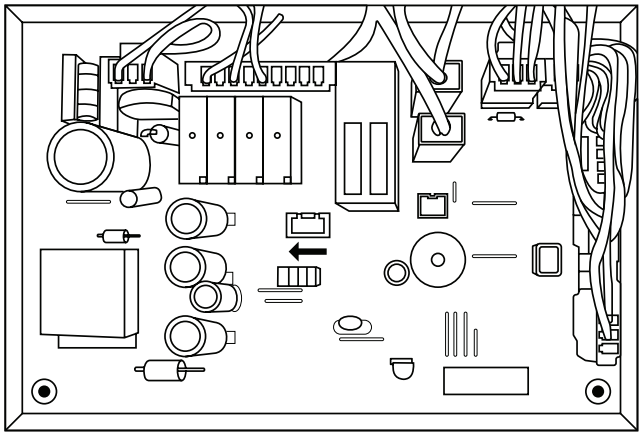

6.12 Water Inlet Valve

The water inlet valve is electronically controlled and solenoid-operated. The water valve has an approximate resistance value of 1 KΩ. The water valve is mounted on a bracket located on the left side of the front brace.

To remove the water valve:

1. Disconnect power.

2. Remove the 2 screws on the kick board.

3. Remove the 2 screws on insulating panel.

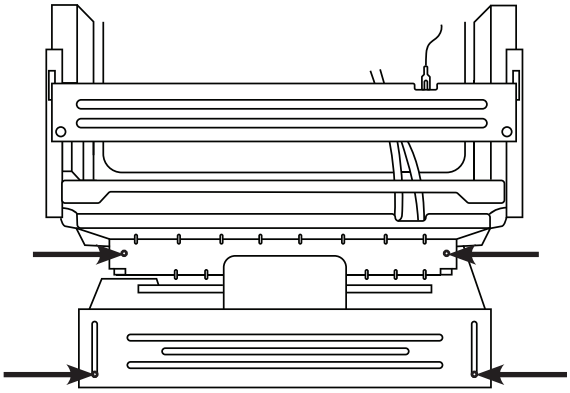

4. Remove the 2 screws that hold the water valve to the front brace.

5. Remove the fixing flat just like the picture below.

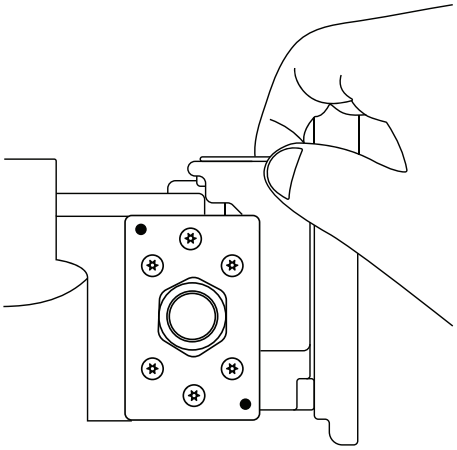

6.12 Water Inlet Valve (cont'd)

The water inlet valve is electronically controlled and solenoid-operated. The water valve has an approximate resistance value of 1 KΩ. The water valve is mounted on a bracket located on the left side of the front brace.

To remove the water valve:

1. Disconnect power.

2. Remove the 2 screws on the kick board.

3. Remove the 2 screws on insulating panel.

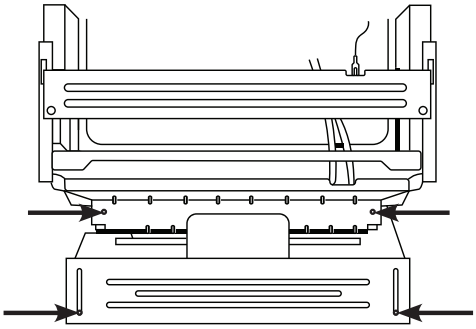

4. Remove the 2 screws that hold the water valve to the front brace.

5. Remove the fixing flat just like the picture below.

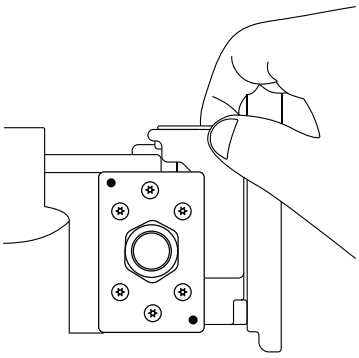

7. Remove the clamp and the outlet hose from the valve.

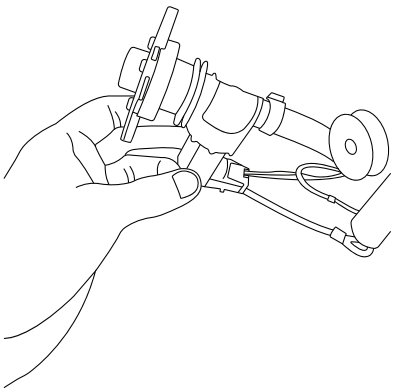

6.13 Pressure Switch

The pressure switch is an overfill safety device mounted on the base located on the right rear. A clear plastic tube (the pressure switch hose) runs from the pressure switch, around the air breaker assembly, and to the sump.

As the dishwasher basin fills with water, the air pressure in the pressure switch hose increases. Normally, the electronic control regulates the amount of time the water fill valve remains open. If the water fill valve remains energized, the overfilling of the basin increases the air pressure in the pressure switch hose causing the pressure switch to open the circuit to the water valve and energize the drain pump.

To remove the pressure switch:

1. Disconnect power.

2. Lay the dishwasher on its back.

3. Remove the 1 screw that attach the base cover to the base.

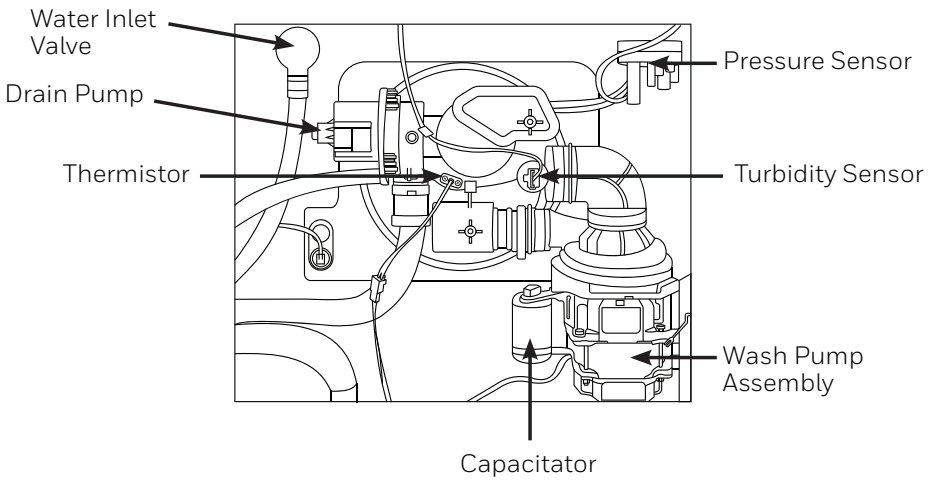

4. Release the snap joint that attach the pressure switch to the base, and take out the pressure switch.

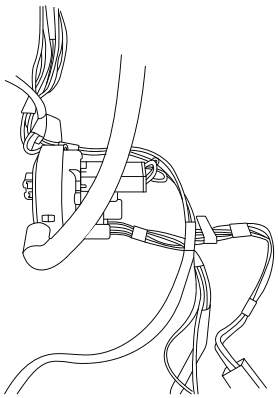

5. Disconnect the brown wire from terminal 1, the yellow wire from terminal 2.

6. Remove the pressure switch hose from the pressure switch.

Note: When installing the pressure switch, ensure the switch is fully seated in the bottom of the base bracket.

6.14 Drain Pump Assembly

The drain pump assembly is located under the tub and operates on 120 VAC. It is energized for the first 60 seconds of a new cycle and 90 seconds after the wash pump shuts down to remove any water in the dishwasher sump. The drain pump forces water out of the drain line. A check valve flapper on the drain pump prevents the dirty water from reentering the sump. The drain pump has an approximate resistance value of 25-35Ω. To remove the drain pump:

1. Disconnect power.

2. Open the dishwasher door and remove the bottom rack.

3. Remove the dishwasher from its installation.

4. Lay the dishwasher on its back.

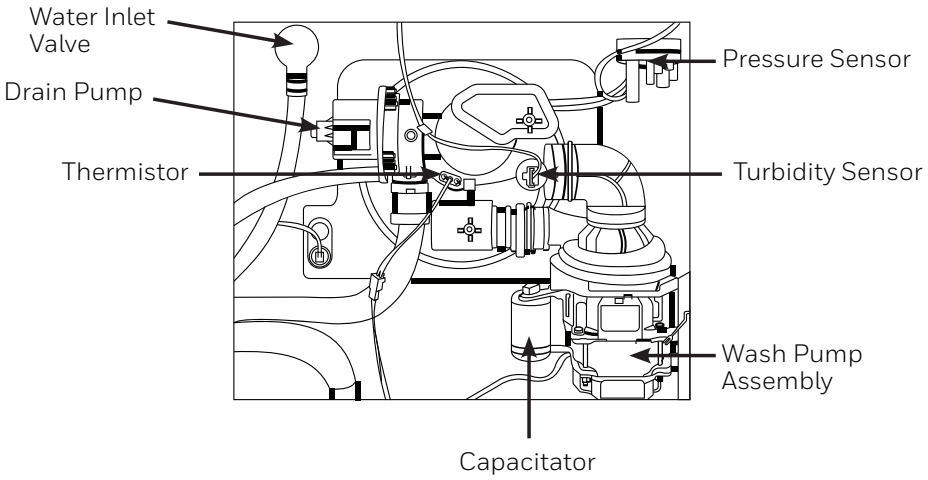

5. Rotate the drain pump 1/4-turn counter-clockwise to remove, which the opposite direction of the mark on the sump.

6. Disconnect the 2 wires from the drain pump.

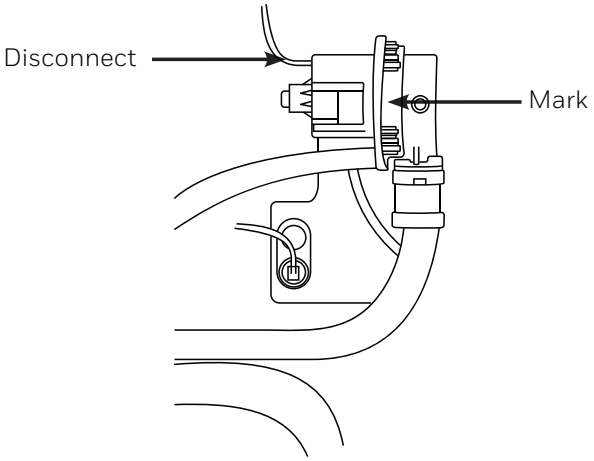

Note: Ensure the 0-ring is retained in the pump seal before reassembly.

6.15 Thermistor

The thermistor is located under the tub and is attached to the back side of the sump with two screws.

During the hot wash cycle, the thermistor senses the water temperature and turns the heating element off.

Note: If the thermistor is not operating, the hot wash cycle will set a default time for the heating element to cycle.

The thermistor has a negative coefficient. As the temperature at the contact point on the tub increases, the thermistor's resistance decreases.The thermistor has an approximate resistance of

R@25°C=10Ω±2%; R@60°C=3011Ω±2%.

To remove the thermistor:

1. Disconnect power
2. Lay the dishwasher on its back
3. Remove the 1 screw that attach base cover to the base.
4. Disconnect the thermistor wire harness
5. Using screwdriver removing the two screws and the thermistor from the sump.

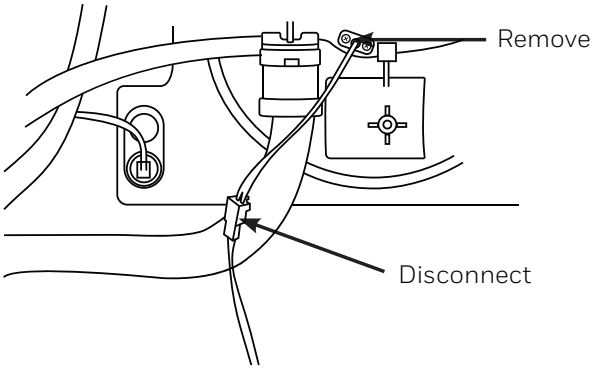

The turbidity sensor is located under the tub and is attached to the back side of the sump with two snap joints. During the pre-wash of wash cycle, the turbidity sensor senses the water, judges the AD interval and chooses the appropriate wash cycle.

Note: If the turbidity sensor is not operating, wash dishwasher will choose a default wash cycle and inlet default wash water.

To remove the thermistor

1. Disconnect power.
2. Lay the dishwasher on its back
3. Remove the 1 screw that attach base cover to the base.
4. Disconnect the thermistor wire harness
5. Release the snap joints to take the turbidity sensor out.

6.16 Turbidity Sensor

The turbidity sensor is located under the tub and is attached to the back side of the sump with two snap joints. During the pre-wash of wash cycle, the turbidity sensor senses the water, judges the AD interval and chooses the appropriate wash cycle.

Note: If the turbidity sensor is not operating, wash dishwasher will choose a default wash cycle and inlet default wash water.

To remove the thermistor

1. Disconnect power.
2. Lay the dishwasher on its back
3. Remove the 1 screw that attach base cover to the base.
4. Disconnect the thermistor wire harness
5. Release the snap joints to take the turbidity sensor out.

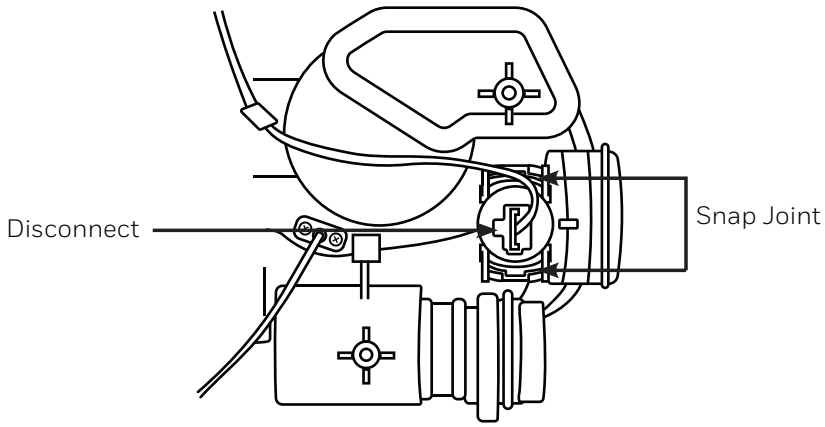

Note: Ensure the 0-ring is retained in the turbidity sensor b Disconnect before reassembly.

6.17 Heating Element

The heating element maintains water temperature during the wash and rinse cycles and heats the air during the drying cycle.

To remove the heating element

1. Disconnect the power

2. Open the dishwasher door and remove the bottom rack.

3. Lay the dishwasher on its back

4. Remove the 1 screw that attach base cover to the base.

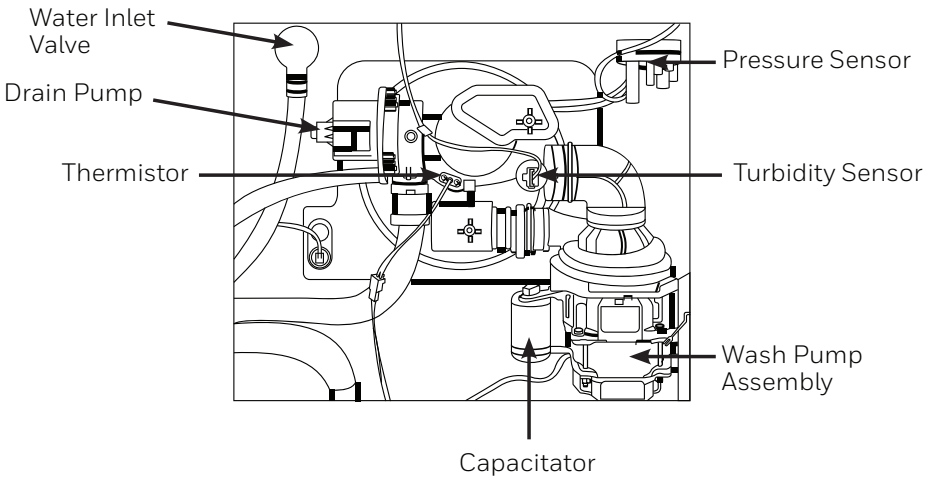

5. Disconnect the 2 wires from the heating element.

6. Remove the two nuts, washers and that attach the heating element to the bottom of the tub.

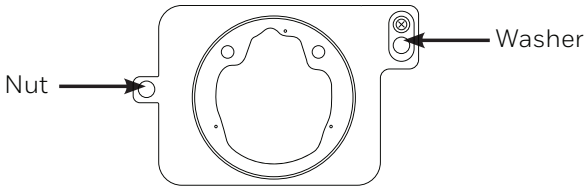

7. Lift the backside of the element and release it from the 2 retainers.

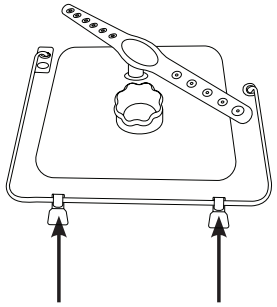

6.18 Motor Pump Assembly

The motor pump assembly is located under the tub on the right of the sump assembly. The motor utilizes a start capacitor rated at 10˚fd. The motor rotates clockwise (as viewed from the terminal end) and draws approximately 1 amp at 120 VAC. The motor pump assembly has an approximate resistance of R1=24-30Ω and R2=19-25 Ω To remove the motor pump assembly:

1. Disconnect power.
2. Open the dishwasher door and remove the bottom rack.
3. Lay the dishwasher on its back.
4. Remove clamps and pump outlet hose.
5. Remove clamps and pump inlet hose.

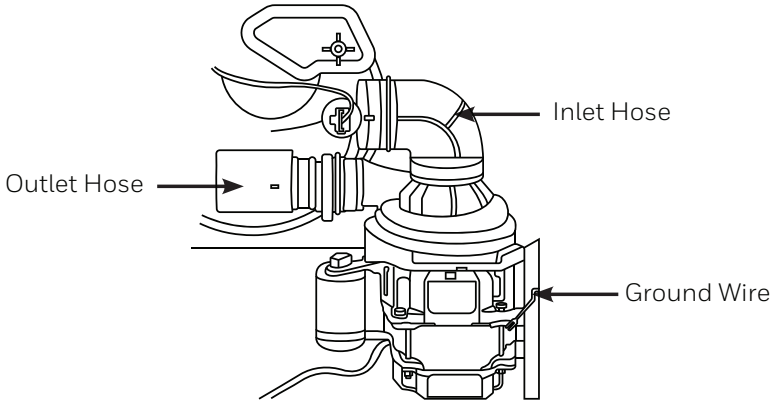

6. Disconnect the motor wire harness , the motor ground wire and soft rubber.

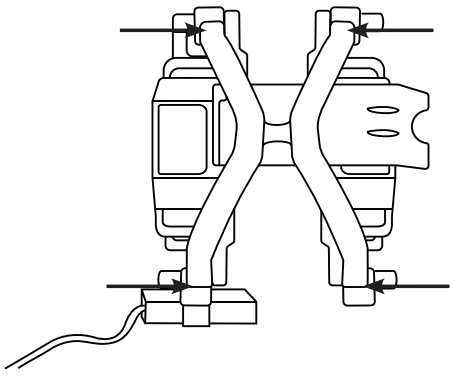

Note: Factory-installed hose clamps are not reusable. When installing a water inlet valve, drain pump assembly, motor pump assembly, or sump assembly, replace the old clamps with new screw-type hose clamps provided. The screw-type hose clamps are available separately.

6.18 Motor Pump Assembly (cont'd)

To remove the motor pump capacitor:

1. Follow steps 1 through 6.

2. The capacitor is connected to the motor with 2 wires and held in place with a nut. Disconnect inlet hose the wires and the nut.

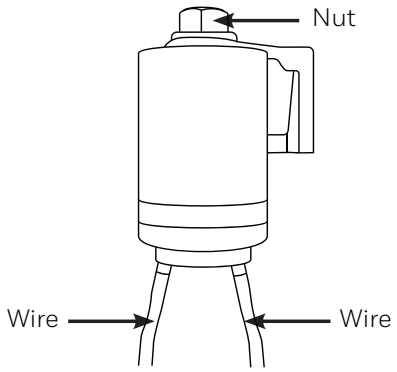

6.19 Sump Assembly

The sump assembly consists of the filter assembly,micro-filter,connecting pipe, sump gasket and sump. The filter assembly prevents large particles from reaching the micro-filter and the micro-filter preventssmall particles from reaching the sump, the filter assembly rests above the sump and the micro-filter sits above the sump basin. The screws holds the sump gasket and sump to the bottom of the dishwasher.

The gasket and sump are located under the tub.

To remove the sump assembly:

1. Disconnect power.

2. Open the dishwasher door and remove the bottom rack.

3. Rotate cylinder filter 1/4-turn in the direction shown on the cylindrical filter.

4. Lift steel filter and cylindrical filter out of tub.

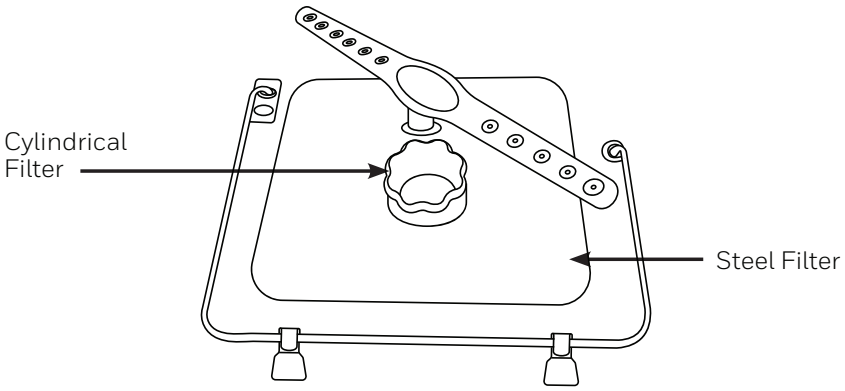

5. Remove the lower spray seat out of the tub.

6. Remove the 4 screws that attach the sump to the tub.

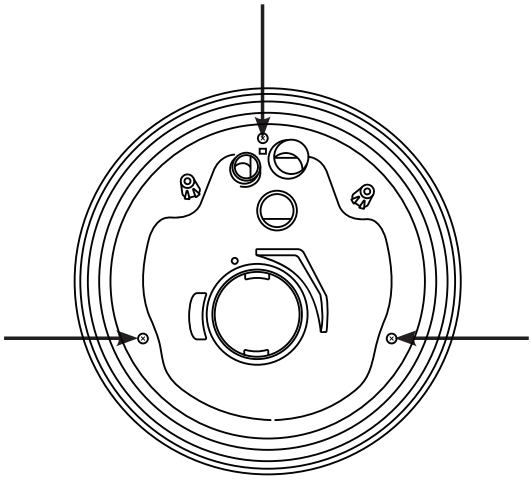

6.19 Sump Assembly (cont'd)

7. Remove the sump gasket (not shown) and sump.

8. Lay the dishwasher on its back.

9. Disconnect the thermistor wire harness and turbudity sensor wire harness.

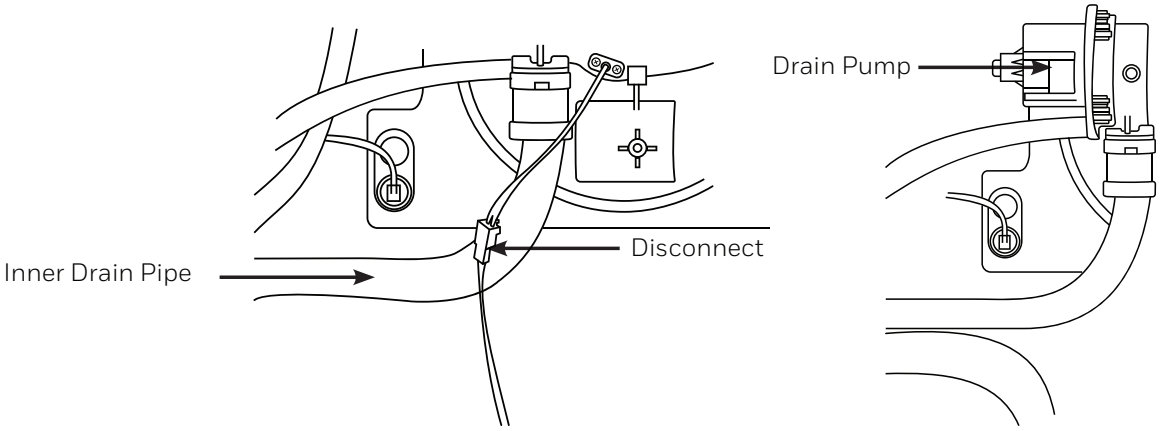

10. Remove the 2 clamps, sump outlet hose, and inlet hose from the sump.

Note: Factory installed hose clamps are not reusable. When installing a water inlet valve, drain pump assembly, wash pump assembly, or sump assembly, replace the old clamps with new screw-type hose clamps provided. The screw-type hose clamps are available separately.

11. Remove the drain pump from the sump.

12. Remove the inner drain pipe from the sump.

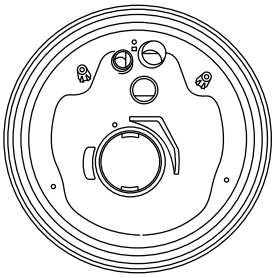

Front View

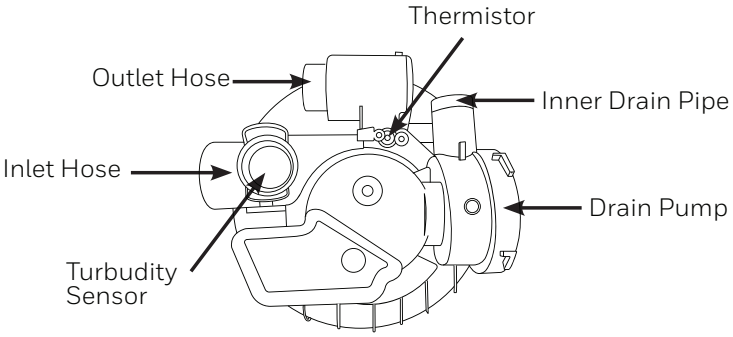

Back View

6.20 Troubleshooting

To enter the factory diagnostic mode:
1. Turn the dishwasher off and make sure no LEDs light.

2. Disconnect power to the dishwasher.

3. Reapply power with the door open and quickly press and hold both the F and Star/Cancle button within 60 seconds from connecting power. Close the door the display will show board type code and F* (* stands for 0,1,2), alternately, each for 1 second. Then the dishwasher will run as below.

Component	SSD	Note
Water pump fan	Turbidity	Turn on water inlet and fan, after 10 seconds turn off the fan. The flow meter will control the water inlet to come in 3L water. This step have turbidity detection function the SSD will display the turbidity value.
Wash pump heater	It indicates the wash cycle finished, the dishwasher will beep	Turn on the wash pump, after 10 seconds, the heater will turn on. The beeper will beep for one time when the temperature has rise for 3~5 degrees for the first time. The dishwasher will stop when the temperature has arrived 57°C. Press " Start/ cancel" to enter the next step.
High wash pump dispenser	The Rinse Aid level is low	Turn on wash pump for 8 seconds after delay 2 seconds, then turn on the dispenser for 45 seconds more.
Pause	02	Pause for 30s.
Drain Pump	01	Turn on the drain pump for 30 seconds.
END	board type code and F*	Beep one time. The SSD shows board type code and F* (* stands for 0,1,2)Restart to enter standby mode.

6.21 Error Code

Symptom	Error Message	Possible Reasons
E1	During the water inlet step, if the flow meter can't detect the defined water after 4 minutes, the dishwasher will warning for E1.	1. check the water supply 2. check the inlet valve 3. check the inlet 4. check the flowmetre 5. check the pressure switch 6. check the drain 7. check the PCB
E3	(only appeared in the factory mode) when the temperature cant reached the defined value after 90 minutes, the dishwasher will warning for E3.	1. check the heater 2. check the thermistor 3. check the PCB
E4	The water flood into the bottom and result in the detective switch moves, the dishwasher will warning for E4.	1. check the use of the detergent 2. check whether the appliance is level 3. check the micro-switch 4. check the drain pump 5. check the amount of the filled water 6. find where leakage is
E6 **E7**	only appeared in the factory mode E6 - thermal sensor cut. E7 - thermal sensor short.	1. check the inlet water temperature 2. check the thermistor 3. check the PCB
E9	If pushing one buttom for more than 30s, the dishwasher will warning for E9	Button sticks, warning resolved when releasing the button
Ed	If the Dashboard detect communication data is abnormal for more than 30s, the dishwasher will warning for Ed	Communication data abnormal, warning resovlved when communicate data return to normal.

6.22 Schematics and Wiring Diagrams

WARNING: Disconnect electrical power before servicing.
Caution: Label all wires prior to disconnection. Wiring errors can cause improper and dangerous operation. Verify operation after servicing.

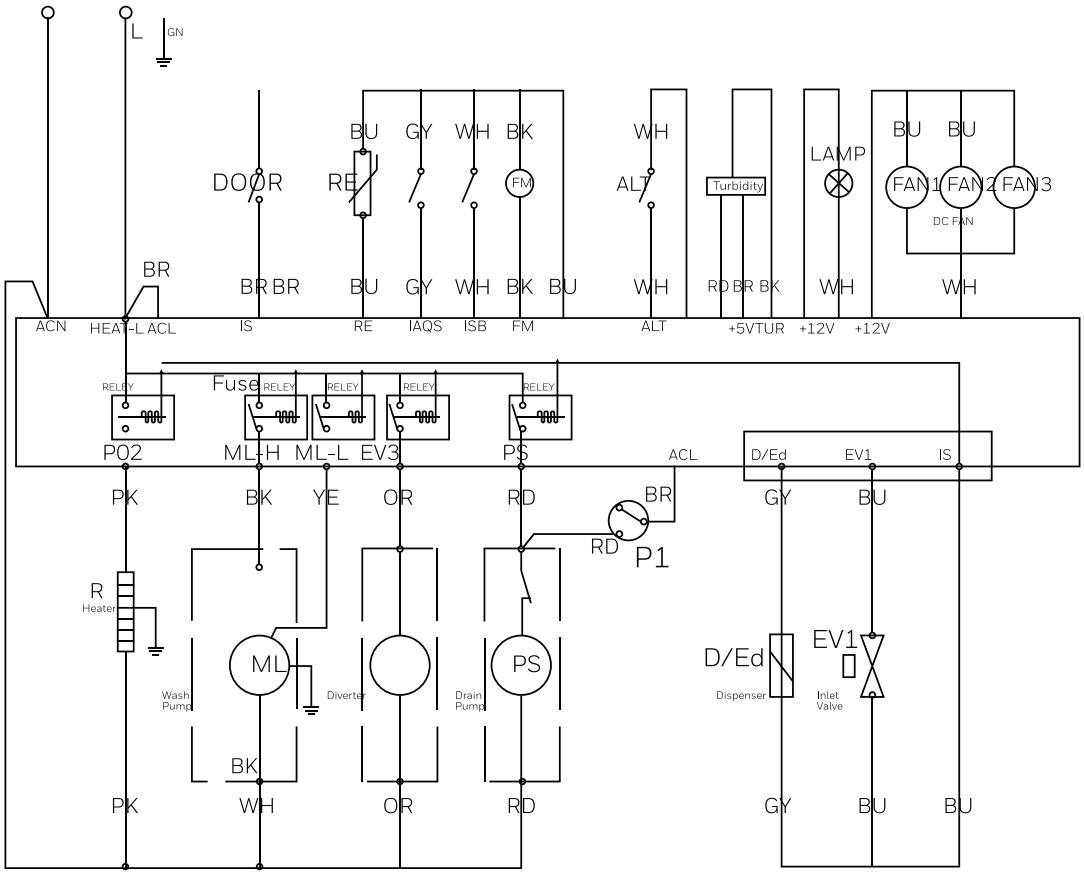

CODE	Designation
ACL	Live (Alternating Current)
ACN	Neutra (Alternating Current)
	Earth
D/Ed	Dispenser
EV1	Inlet Valve
EV2	Softener Valve
EV3	Water Diverter
IAQs	Overflow Switch
FM	Flow Meter
P2	Dry Heating Protect Switch
P1	Water Level Switch (140/120)
ISB	Rinse Aid Detector
ISS	Salt Detector
ML	Wash Pump
	Capacitor
PS	Drain Pump
FAN	Fan

FUSE	Fuse (3.15A)
R	Heater
DOOR	Door Switch
IS	Door Switch Detector
RE	Temperature Sensor (NTC)
NS	Nephelometer/Turbidity

CODE	Designation	CODE	Designation
BU	Blue	PK	Pink
YE	Yellow	GY	Gray
GN	Green	OR	Orange
WH	White	BR	Brown
RD	Red	PU	Purple
BK	Black	YE+GN	Yellow + Green

7 USER MAINTENANCE

Keeping your dishwasher clean improves its performance, reduces unnecessary repairs, and lengthens its life.

7.1 Cleaning the Exterior

It's best to clean spills on the outside of your dishwasher as they occur. Use a soft, damp cloth on the control panel to gently wipe away spills and dust. Do not use benzene, wax, thinner, chlorine bleach, or alcohol. These materials may discolor the inner walls and cause stains. Do not clean the dishwasher by sprinkling water over it and avoid letting water come into contact with any of the electrical parts.

NOTE If your dishwasher has a stainless steel door panel, you can clean it with a stainless steel cleaner for home appliances or a similar product using a clean, soft cloth.

7.2 Cleaning the Interior

Clean the interior of your dishwasher periodically to remove any dirt or food particles. Wipe the inside of the dishwasher and the inner part of the door with a wet dishcloth. We recommend fi lling the detergent dispenser with dish detergent, and then running the dishwasher empty periodically using either the Normal or Express 60 cycle with the sanitize option. This will keep your dishwasher clean.

If white spots and odor are still present in your dishwasher, run the Normal cycle with the dishwasher empty and without detergent until it fl ushes. Then, interrupt the cycle and put an 8 ounce cup of white vinegar into the lower basket. Close the dishwasher and let the cycle finish.



CAUTION Do not remove the tub front seal. (The long rubber seal enclosing the opening of the dishwasher.)

Do not touch the heating element during or immediarely after use.

7.3 Cleaning the Filters

01 Turn off the dishwasher.

02 Rotate the filter insert counterclockwise to unfasten and detach the filter insert.

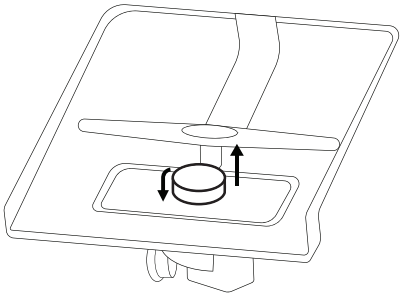

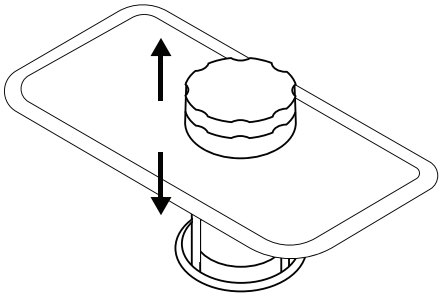

03 Remove the fine filter. (flat rectangle)

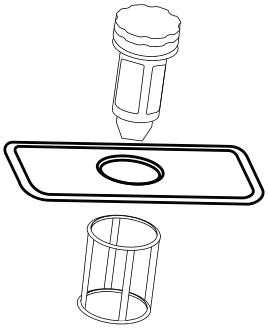

04 Remove any dirt or other remains from the filters, and then rinse them under running water.

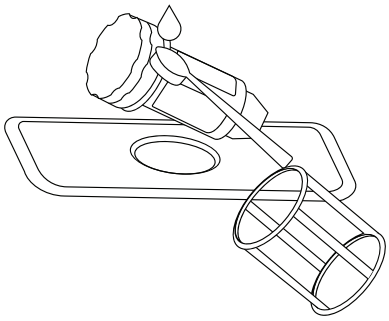

05 Reassemble the filters in the reverse order of the dissasembly, replace the filter insert, and rotate clockwise to the close arrow.

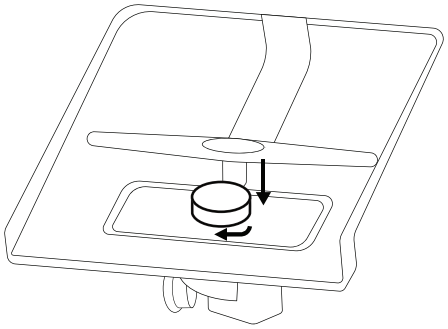

CAUTION If the filter is not closed properly, its preformance will be decreased.

7.4 Cleaning the Nozzles

If your dishwasher does not seem to be cleaning adequately or the nozzles seem clogged, you can clean each of the nozzles. When removing the nozzles, take care as they may break.

Lower Nozzle

01 Check whether the nozzle holes are clogged by food particles.

02 If cleaning is needed, remove the nozzle by pulling it upwads.

03 Clean the nozzle, and then push it back into place.

04 Check whether the nozzle is engaged correctly by rotating it by hand.

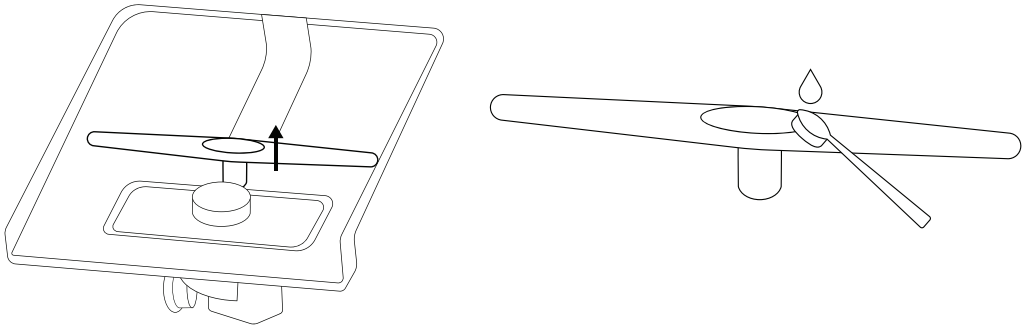

8 TROUBLESHOOTING

Before Calling for Service

Problem	Possible Cause	Solution
Dishwasher won't start	Door may not be closed properly Power supply or power line is not connected Delay Start option has been selected	Shut the door completely, make sure it is latched Check and connect the power supply, refer to this manual to reset
Dishwasher beeps at the end of cycle	It indicates the wash cycle finished, the dishwasher will beep	
Rinse Aid light on	The Rinse Aid level is low	Add Rinse Aid
Dishwasher operates too long	The dishwasher is connected to cold water The cycle time will vary due to the soil The Sanitize option is selected	Check the dishwasher, make sure it is connected to the hot water supply When heavy soil is detected the Auto, Normal, Heavy Wash cycle will automatically increase the cycle time When Sanitize option is selected, the cycle time will increase to meet the sanitized temperature request
Dishes are not clean enough	Water pressure is temporarily low The inlet water is low Dishes are loaded too close together Improper use of detergent The selected cycle is not suitable for food soil condition Spray arms are blocked by items	Use dishwasher when water pressure is normal Make sure dishwasher is connected to hot water supply, try not to use dishwasher when hot water is being used elsewhere Load dishes again as the manual introduced Add detergent depending on the water hardness and the cycle chosen, use fresh detergent Choose another cycle for longer washing time Make sure the spray arm is rotated fluently
Dishes are not drying enough	Detergent dispenser is empty Improper loading of dishes The cycle you chose did not include drying	Fill Rinse Aid Dispenser or increase amount of Rinse Aid Load the dishes again as indicated Choose the proper cycle with drying

Problem	Possible Cause	Solution
Spots and filming on dishes	Water hardness is too high Improper loading of dishes Old or damp powder Rinse Aid is used Rinse Dispenser empty	For extremely hard water, install a water softener Load the dishes again as indicated Use fresh Rinse Aid Add Rinse Aid to the Dispenser
Etching	Using too much detergent The inlet water temperature exceeds 150°F	Use less detergent if you have soft water etching Lower the inlet water temperature
Detergent left in dispenser cup	Detergent may be too old Spray arm is blocked	Use fresh detergent Load the dishes making sure the spray arms aren't blocked
Detergent dispenser will not shut	Improper orientation of the detergent cover	Add detergent and rinse aid as indicated by this manual
Water remains in the dishwasher	Previous cycle has not finished or has been interrupted	Select the proper cycle as introduced by the manual
Dishwasher does not drain properly	Drain is clogged Drain hose is bent	Check the air gap if you have Make sure the disposer is empty if the dishwasher is connected to the disposer Make sure the drain hose is properly connected to the sink
Suds in the tub	Improper detergent is used	Make sure to use only the automatic dishwasher detergent
Dishwasher leaks	Excessive suds caused by using improper detergent Dishwasher is not level	Make sure to use only the automatic dishwasher detergent Level the dishwasher (see manual)
Black or gray marks on dishes	Aluminum utensils have rubbed against dishes	Choose a higher cycle Make sure the inlet water is no less than 120°F
Stained tub interior	Coffee and tea soil Reddish stain	Using a spot cleaner to remove the soil Some tomato based food will cause this, use of the rinse only cycle right after loading this will decrease the staining

Problem	Possible Cause	Solution
Noises	Detergent cup opening/Drain pump sound A hard object has entered the wash module. When the object is ground up, the sound should stop	This is normal If the noise persists after a complete cycle, call for service
Dishwasher won't fill	Water valve is turned off Door latch may not be properly sealed	Check if the water valve is turned on Make sure the door is closed

8.1 Error Codes

When some malfunctions come on, the appliance will display error codes to warn you:

Codes	Meanings	Possible Causes
E1	Longer inlet time	Faucets are not opened, or water intake is restricted, or water pressure is too low
E4	Overflow	Some element of dishwasher leaks
E8	Improper orientation of distributary valve	Open circuit or break of distributary valve
E9	Keep touching a button more than 30 seconds	Water or something on the button



If overflow occurs, turn off the main water supply before calling service.

If there is water in the base pan because of an overfill or small leak, the water should be removed before restarting the dishwasher.

9 TECHNICAL INFORMATION

Capacity	8 place settings
Dimension	17.6” x 21.7” x 32.4” (W x D x H)
Power Supply	120 volts, 60Hz
Rated Power Usage	Wash Motor 100W, Heater 700W
Water Feed Pressure	5.8 ~ 145 psi (0.04 ~ 1MPa)

LIMITED WARRANTY

Models included are:
H101TFS, H16MRB, H16MRS, H33MRB, H33MRS, H31MRS, H31MRB, H11MFW, H11MFB, H11MFS, H17UFW, H17UFS, H35CFW, H5CFW, H7CFW, H14WCB, H24WCB, H34WCB, H52WCS, H48BCS, H115BCS, H4MFSS, HDS18B, HDS18W, HDS24SS, HCTDS1W, HCTDS2W, HAC5, HAC5-B, HAC6, HAC6-B, HAC8, HAC8-B, HAC10, HAC10-B, HAC12, HAC12-B, HAC14, HAC12-B, HAC-U8, HAC-U8-B, HAC-U10, HAC-U10-B, HAC-U12-W, HAC-U12-B, H3UFW, H3UFB, H3UFS, HAC-8I, H7WCS, H36WCS, H46WCS, H56WCS, H154WCS, H165WCS, H174WCS, H186WCS, H46WCS1, H7WCS-B, H36WCS-B, H46WCS-B, H46WCS-1B, H56WCS-B, H154WCS-B, H165WCS-B, H174WCS-B, H186WCS-B

Products listed above are covered by the terms of this Limited Warranty. For purposes of this Limited Warranty,

the term “product” means any appliance manufactured for BHRS Group. BHRS Group warrants that it will, at BHRS Group’s option, replace or repair the Purchaser’s BHRS Group product sold in the U.S. or Canada by an authorized retailer if that product is defective due to faulty workmanship or materials, subject to the limitations described in this Limited Warranty. BHRS Group undertakes no responsibility for the quality of the goods except as otherwise provided in this warranty. There are no warranties that extend beyond the description on the face hereof. This Limited Warranty is valid only in connection with the original purchase of new products from authorized retailers and extends from the original purchase date of the original product purchased. This warranty extends only to the original purchaser of the product and lasts for one (1) year from the date of the original purchase or until the original purchaser of the product sells or transfers the product, whichever fi st occurs. An “original purchaser,” for the purposes of this Limited Warranty, is an individual or entity who purchases the product directly from BHRS Group or an authorized retailer of BHRS Group with the intent to use the product for personal consumer use and commercial or industrial use and not with the intent to resell the product. An “authorized retailer,” for purposes of this Limited Warranty, is an individual or entity authorized by BHRS Group to sell the product directly to original purchasers.

An individual or entity that purchases the product from whatever source with the intent to resell the product is an unauthorized reseller (“unauthorized reseller”). For the purpose of this Limited Warranty a “Third Party” would be considered any plumber, maintenance company, or individual hired by the Purchaser.

This Limited Warranty does not apply to used, refurbished, renewed, floor model or “demo” products, or to products sold by unauthorized resellers, including without limitation, unauthorized resellers on third party websites, including, without limitation, Craigslist, eBay, Amazon, etc. Unauthorized resellers are not “original purchasers” for the purpose of this Limited Warranty. If the purchaser is not the original purchaser of this product, the purchaser takes the product “AS IS,” “with all faults” and without warranty. BHRS Group reserves the right to require a valid serial number located on your product to submit a valid claim under this Limited Warranty. Products where the serial number has been removed or evidence showing the removal or attempted removal of the serial number label will not be eligible to make a claim under this Limited Warranty. IF THE PURCHASE OF THIS PRODUCT WAS NOT DIRECTLY FROM BHRS GROUP, PROOF OF PURCHASE WILL BE REQUIRED TO DEMONSTRATE THAT PURCHASER IS THE ORIGINAL PURCHASER AND THE PRODUCT WAS PURCHASED FROM AN AUTHORIZED RETAILER, AND ELIGIBLE TO MAKE A VALID CLAIM UNDER THIS LIMITED WARRANTY. Your purchase date is established from the date of your sales receipt. BHRS Group may require the purchaser to provide proof of the quality and condition of the appliance if the purchaser makes a claim under this Limited Warranty. BHRS Group reserves the right to invalidate this Limited Warranty if the appliance is determined, in BHRS Group’s reasonable discretion, to be inadequate or if the appliance is found to be in an unsanitary condition. This warranty does not apply if the product was damaged or failed because of accident, improper handling or operation, relocation, abuse, misuse, unauthorized repairs made or attempted, or improper installation or maintenance. Under this Limited Warranty, products are required to be plugged directly into a grounded wall outlet. Plugging a product into an extension cord or surge protector will be considered misuse and will void this Limited Warranty. If damage to the product has occurred during shipping, the damage must be reported to BHRS Group within the first 30 days from the original purchase date to be eligible to make a claim under the Limited Warranty. Shipping damage reported to BHRS Group outside of the fi st 30 days from the original purchase date will not be eligible for a valid

claim under this Limited Warranty. This warranty does not cover shipping costs for the return of products to BHRS Group for repair or replacement.

To submit a valid claim under this Limited Warranty, troubleshooting the product with a BHRS Group Customer Success Expert is required. If troubleshooting the product is refused by the Purchaser, BHRS Group reserves the right to deny the Limited Warranty Claim. In the event a part is necessary to correct the problem with a Product, BHRS Group will provide the part at no cost to the original purchaser under this Limited Warranty. Replacing parts or attempting to correct an issue with the Product is required prior to submitting a claim for a replacement product under this Limited Warranty. Instructions for troubleshooting a Product or replacing a part will be provided by BHRS Group. Troubleshooting, repairs, part replacement, installation, and proper maintenance are the responsibility of the Purchaser. Instructions for proper installation and maintenance will be provided in the user manual.

Installation, maintenance, or repairs of the Product is the responsibility of the Purchaser. The Purchaser reserves the right to use a Third Party for installation, maintenance, and repair at their own risk. BHRS Group is not responsible for any additional cost incurred for installation, maintenance, or repair of the Product including but not limited to additional material needed for installation or the cost of a Third Party. Damage or failure of the Product due to improper installation, maintenance, or repair caused by a Third Party or the Purchaser is not the responsibility of BHRS Group and will not be covered under this Limited Warranty. Instructions for proper installation and maintenance will be provided in the user manual.

ANY AND ALL WARRANTIES, EXPRESSED OR IMPLIED (INCLUDING, WITHOUT LIMITATION, ANY IMPLIED WARRANTY OF MERCHANTABILITY), LAST ONE YEAR FROM THE DATE OF ORIGINAL PURCHASE OR UNTIL THE ORIGINAL PURCHASER OF THE PRODUCT SELLS OR TRANSFERS THE PRODUCT, WHICHEVER FIRST OCCURS. IN NO EVENT SHALL BHRS GROUP'S LIABILITY UNDER ANY EXPRESS OR IMPLIED WARRANTY INCLUDE (I) INCIDENTAL OR CONSEQUENTIAL DAMAGES FROM ANY CAUSE WHATSOEVER, INCLUDING BUT NOT LIMITED TO ELECTRICAL OR WATER DAMAGE, OR (II) REPLACEMENT OR REPAIR OF ANY HOUSE FUSES, CIRCUIT BREAKERS OR RECEPTACLES. NOTWITHSTANDING ANYTHING TO THE CONTRARY, IN NO EVENT SHALL BHRS GROUP'S LIABILITY UNDER ANY EXPRESS OR IMPLIED WARRANTY EXCEED THE PURCHASE PRICE OF THE PRODUCT AND ANY SUCH LIABILITY SHALL TERMINATE UPON THE EXPIRATION OF THE WARRANTY PERIOD.

Except as otherwise provided, BHRS Group will not charge Original Purchaser to repair or replace the purchaser's Product if it is deemed defective during the length of this Limited Warranty, but any transportation costs associated with repairs or replacements are Purchaser's responsibility. No new warranty is provided with a replacement product. The warranty for the replacement product runs from the date of the original purchase of the original product. In the event that repair is necessary, such repair will be at no charge to the Purchaser except for transportation costs associated with such repair or replacement of a product in compliance with the terms of this Limited Warranty.

In the event, a warranty claim is filed and a warranty replacement is deemed necessary, the purchaser will be required to surrender the original product to BHRS Group at the time of replacement. Some states and provinces do not allow limitations on how long an implied warranty lasts or the exclusion or limitation of incidental or consequential damages, so these exclusions or limitations may not apply to you. This warranty gives you specific legal rights. You may also have other rights which vary from state to state and province to province.

If you want to return or replace the product, please contact the store where it was purchased (remember to bring the purchase invoice). If your product needs repair, please contact us via email or phone.

If you want to return or replace the product, please contact the store where it was purchased (remember to bring the purchase invoice). If your product needs repair, please contact us via email or phone.

BHRS Group, LLC
585 Prospect St.
Lakewood, NJ 08701

Customer Service Tel: 1-888-604-0295
Customer Service Email: support@honeywellcoolingappliances.com
Website: honeywellcoolingappliances.com

©2023 BHRS Group, LLC. All Rights Reserved.

The Honeywell Trademark is used under license from Honeywell International Inc. Honeywell International Inc. makes no representations or warranties with respect to this product. This product is manufactured by BHRS Group, LLC.

MADE IN CHINA

Honeywell