ENGLISH

FORNO

Espresso

GAS RANGE

MODEL NUMBER SERIES

FFSGS1116-30 | FFSGS1116-30BLK | FFSGS1116-30WHT

INSTALLATION GUIDE

Read these instructions carefully before using your appliance, and keep it carefully.
If you follow the instructions, your appliance will provide you with many years of good service.

05/2026

Table of Contents

RANGE SAFETY 3
Anti-tip Device 4
INSTALLATION REQUIREMENTS 6
Tools and Parts 6
Location Requirements 8
Installation Requirement..... 10
Venting Requirements 12
Electrical Requirements 13
Gas Supply Requirements 16
INSTALLATION INSTRUCTIONS 19
Unpack Range 19
Install Anti-tip Device 20
Install Backsplash 22
Gas Connection 23
Complete Connection 25
Adjust Flame Height 27
Level Range 28
GAS CONVERSION 30

Range Safety

⚠ WARNING

Fire Hazard

If the information in this manual is not followed exactly, a fire or explosion may result causing property damage, personal injury or death.

- Do not store or use gasoline or other flammable vapors and liquids in the vicinity of this or any other appliance.
- WHAT TO DO IF YOU SMELL GAS
  - Do not try to light any appliance.
  - Do not touch any electrical switch.
  - Do not use any phone in your building.
  - Clear the room, building, or area of all occupants.
  - Immediately call your gas supplier from a neighbor's phone. Follow the gas supplier's instructions.
  - If you cannot reach your gas supplier, call the fire department.
- Installation and service must be performed by a qualified installer, service agency or the gas supplier.

⚠ WARNING

Never Operate the Top Surface Cooking Section of this Appliance Unattended.

- Failure to follow this warning statement could result in fire, explosion, or burn hazard that could cause property damage, personal injury, or death.
- If a fire should occur, keep away from the appliance and immediately call your fire department.

DO NOT ATTEMPT TO EXTINGUISH AN OIL/GREASE FIRE WITH WATER

⚠ WARNING

Tip Over Hazard

- A child or adult can tip the range and be killed.
- Install anti-tip bracket to floor or wall per installation instructions.
- Slide range back so rear range foot is engaged in the slow of the anti-top bracket.
- Re-engage the anti-tip bracket if range is moved.
- Do not operate the range without anti-tip bracket installed and engaged.
- Failure to follow these instructions can result in death or serious burns to children and adults.

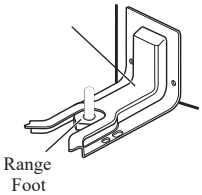

Making sure the anti-tip bracket is installed:

- Slide range forward.
- Look for the anti-tip bracket securely attached to floor and wall.
- Slide range back so rear range foot is under anti-tip bracket.

WARNING: Gas leaks cannot always be detected by smell.

Gas suppliers recommend that you use a gas detector approved by UL or CSA.

For more information, contact your gas supplier.

WARNING: Do not install a ventilation system that blows air downward toward this cooking appliance. This type of ventilation system may cause ignition and combustion problems with this cooking appliance resulting in personal injury or unintended operation.

Your safety and the safety of others are very important. We have provided many important safety messages in this manual and on your appliance. Always read and obey all safety messages.

This is the safety alert symbol.

This symbol alerts you to potential hazards that can kill or hurt you and others.

All safety messages will follow the safety alert symbol and either the word "DANGER," "WARNING" or "CAUTION." These words mean:

DANGER — You can be killed or seriously injured if you don't immediately follow instructions.

WARNING — You can be killed or seriously injured if you don't follow instructions.

CAUTION — A potentially hazardous situation which, if not avoided, could result in minor or moderate injury.

All safety messages will tell you what the potential hazard is, tell you how to reduce the chance of injury, and tell you what can happen if the instructions are not followed.

In the State of Massachusetts, the following installation instructions apply:

- Installations and repairs must be performed by a qualified or licensed contractor, plumber, or gasfitter qualified or licensed by the State of Massachusetts.
- If using a ball valve, it shall be a T-handle type.
- A flexible gas connector, when used, must not exceed 3 feet.

WARNING: This product can expose you to chemicals including [Lead , Lead and lead compounds], which is [are] known to the State of California to cause cancer and birth defects or other reproductive harm. For more information go to www.P65Warnings.ca.gov.

TOOLS AND PARTS

Gather the required tools and parts before starting installation. Read and follow the instructions provided with any tools listed here.

Tools Needed

- Tape measure
- Flat-blade screwdriver
- Phillips screwdriver
- Level
- Drill
- Wrench or pliers
- Pipe wrench
- 15/16” (2.4 cm) combination wrench
- 1/8” (3.2 mm) drill bit (for wood floors)
- Marker or pencil
- Pipe-joint compound resistant to Propane gas
- 3/16” (4.8 mm) carbide-tipped masonry drill bit (for concrete/ceramic floors)
- Noncorrosive leak-detection solution

Parts Supplied

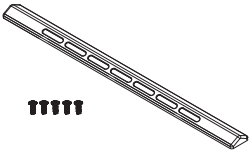

Backsplash with screws

Anti-tip bracket with screws

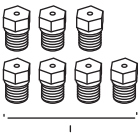

LP Gas Conversion kit

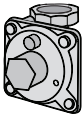

Gas pressure regulator

Gas pipe adapter with washers

Parts Needed

Gas supply line kit
(supply line and 2 adapters)

LOCATION REQUIREMENTS

IMPORTANT: Observe all governing codes and ordinances. Do not obstruct flow of combustion and ventilation air.

- It is the installer's responsibility to comply with installation clearances specified on the model/serial rating plate. The model/serial rating plate is located behind the oven door on the oven frame.

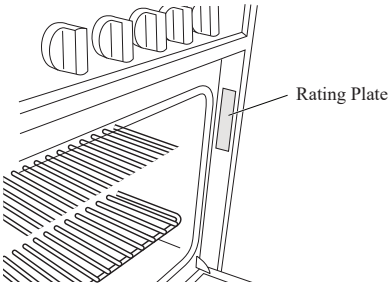

- The range should be located for convenient use in the kitchen.
- Recessed installations must provide complete enclosure of the sides and rear of the range.
- To eliminate the risk of burns or fire by reaching over heated surface units, cabinet storage space located above the surface units should be avoided. If cabinet storage is to be provided, the risk can be reduced by installing a range hood or microwave hood combination that projects horizontally a minimum of 5" (12.7 cm) beyond the bottom of the cabinets.
- All openings in the wall or floor where range is to be installed must be sealed.
- Do not seal the range to the side cabinets.
- Cabinet opening dimensions that are shown must be used.
- Grounded electrical supply is required. See "Electrical Requirements" section.
- Proper gas supply connection must be available. See "Gas Supply Requirements" section.
- Contact a qualified floor covering installer to check that the floor covering can withstand at least 200°F (93°C).
- Use an insulated pad or 1/4" (0.64 cm) plywood under range if installing range over carpeting.

Mobile Home - Additional Installation Requirements

- The installation of this range must conform to the Manufactured Home Construction and Safety Standard, Title 24 CFR, Part 3280 (formerly the Federal Standard for Mobile Home Construction and Safety, Title 24, HUD Part 280). When such standard is not applicable, use the Standard for Manufactured Home Installations, ANSI A225.1/NFPA 501A or with local codes.

  In Canada, the installation of this range must conform with the current standards CAN/CSA-A240-latest edition, or with local codes.

Mobile Home Installations Require:

- When this range is installed in a mobile home, it must be secured to the floor during transit. Any method of securing the range is adequate as long as it conforms to the standards listed above.
- Four-wire power supply cord or cable must be used in a mobile home installation. The appliance wiring will need to be revised. See “Electrical Connection” section.

INSTALLATION REQUIREMENTS

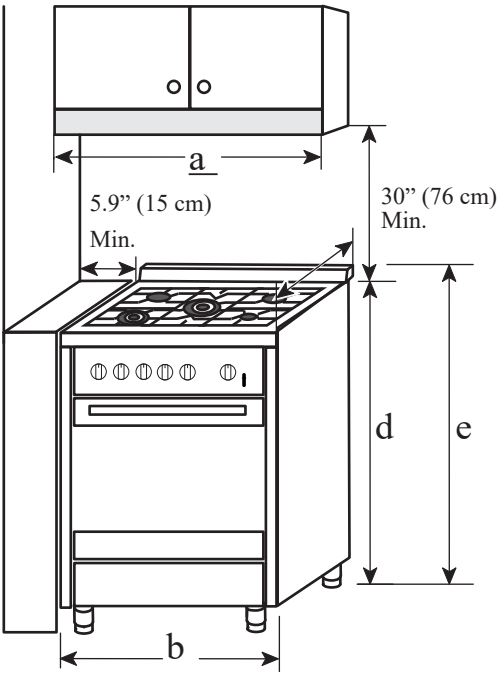

	Dimension
a	30” (76 cm)
b	30” (76 cm)
c	25” (63.5 cm)
d	36” (91.4 cm)
e	37¾” (96 cm)

NOTE: Range can be raised approximately 1” (2.5 cm) by adjusting the leveling legs. Front of door and drawer may extend farther forward depending on styling.

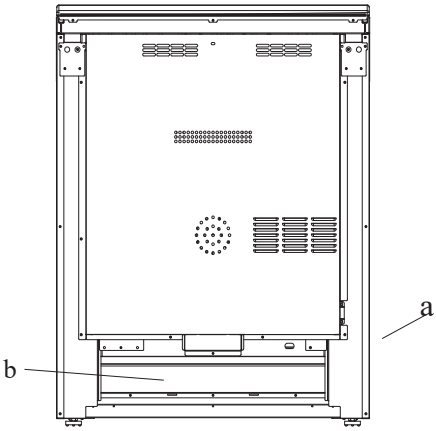

A	Power Cord
B	Recessed Area

Power Supply Location

IMPORTANT: An electrical outlet in the floor, may be either recessed or surface mounted, but an electrical outlet in the wall must be recessed to make the connection. For Direct Wiring, the electrical box should be mounted to the wall.

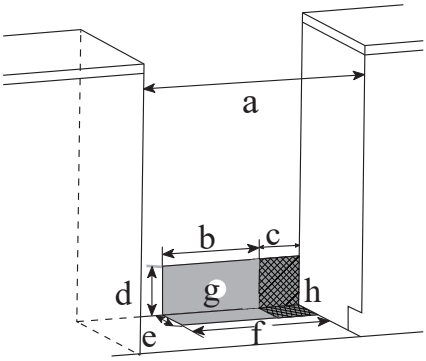

a	30” (76 cm)
b	11½” (29.2 cm)
c	6” (15.2 cm)
d	7¼” (18.4 cm)
e	3” (7.6 cm)
f	17½” (44 cm)
g	Recommended Location for Electrical Outlet
h	Recommended Location for Gas Supply Connection

VENTING REQUIREMENTS

IMPORTANT: This range must be exhausted outdoors unless you are using ductless venting. Observe all governing codes and ordinances. Do not obstruct flow of combustion and ventilation air.

- Do not terminate the vent system in an attic or other enclosed area.
- Use an approved vent cap for proper performance. If an alternate wall or roof cap is used, be certain the cap size is not reduced and that it has a backdraft damper.
- Vent system must terminate to the outside unless you are using a ductless vent kit.
- Rigid metal vent is recommended. For best performance, do not use plastic or metal foil vent.
- If a joist or stud must be cut, then a supporting frame must be constructed.
- The size of the vent should be uniform.
- The vent system must have a damper.
- Seal all joints in the vent system.
- Use caulking to seal exterior wall or roof opening around the cap.
- Determine which venting method is best for your application.

Makeup Air

Local building codes may require the use of makeup air systems when using ventilation systems greater than specified CFM of air movement. The specified CFM varies from locale to locale. Consult your HVAC professional for specific requirements in your area.

ELECTRICAL REQUIREMENTS

120V/60Hz

⚠ WARNING

Electrical Shock Hazard

Electrically ground range.

Failure to do so can result in death, fire or electrical shock.

Electrical Grounding Instructions

This appliance is equipped with a three-prong grounding plug for your protection against shock hazard and should be plugged directly into a properly grounded receptacle. Do not cut or remove the grounding prong from this plug.

This range is equipped with an electronic ignition system that will not operate if plugged into an outlet that is not properly polarized.

If codes permit and a separate ground wire is used, it is recommended that a qualified electrical installer determine that the ground path is adequate and wire gauge is in accordance with local codes.

Do not use an extension cord.

WARNING: Improper connection of the equipment-grounding conductor can result in a risk of electric shock. Check with a qualified electrician or service technician if you are in doubt as to whether the appliance is properly grounded. Do not modify the power supply cord plug. If it will not fit the outlet, have a proper outlet installed by a qualified electrician.

ELECTRICAL REQUIREMENTS - U.S.A. ONLY

Be sure that the electrical connection and wire size are adequate and in conformance with the National Electrical Code, ANSI/ NFPA No. 70-latest edition and all local codes and ordinances.

A copy of the above code standards can be obtained from:

National Fire Protection Association
1 Batterymarch Park
Quincy, MA 02169

Electrical Connection

- Check local codes and consult gas supplier. Check existing electrical supply and gas supply. It is recommended that all electrical connections be made by a licensed, qualified electrical installer.
- Range must be connected to the proper electrical voltage and frequency as specified on the model/serial rating plate. The plate is located behind the oven door on the oven frame. Refer to the illustrations in the “Location Requirements” section.
- A 120 volt, 60 Hz, AC only, 15-amp fused, electrical circuit is required. A time- delay fuse or circuit breaker is also recommended. It is recommended that a separate circuit serving only this range be provided.
- Electronic ignition systems operate within wide voltage limits, but proper grounding and polarity are necessary. Check that the outlet provides 120-volt power and is correctly grounded.
- This gas range is not required to be plugged into a GFCI (Ground-Fault Circuit Interrupter) outlet. It is recommended that you not plug an electric spark ignition gas range or any other major appliance into a GFCI wall outlet as it may cause the GFCI to trip during normal cycling.
- Performance of this range will not be affected if operated on a GFCI-protected circuit. However, occasional nuisance tripping of the GFCI breaker is possible due to the normal operating nature of electronic gas ranges.
- The wiring diagram is located on the back of the range in a clear plastic bag.

NOTE: The metal chassis of the range must be grounded in order for the control panel to work. If the metal chassis of the range is not grounded, no keypads will operate. Check with a qualified electrician if you are in doubt as to whether the metal chassis of the range is grounded.

ELECTRICAL REQUIREMENTS - CANADA ONLY

Be sure that the electrical connection and wire size are adequate and in conformance with the CSA Standard C22.1, Canadian Electrical Code, Part 1 - latest edition and all local codes and ordinances.

A copy of the above code standards can be obtained from:

Canadian Standards Association 178
Rexdale Blvd.
Toronto, ON M9W 1R3 CANADA

Electrical Connection

Check local codes and consult gas supplier. Check existing electrical supply and gas supply. It is recommended that all electrical connections be made by a licensed, qualified electrical installer.

- Check with a qualified electrical installer if you are not sure the range is properly grounded.
- A time-delay fuse or circuit breaker is recommended.
- This range is equipped with a CSA International Certified Power Cord intended to be plugged into a standard 14-50R wall receptacle. Be sure the wall receptacle is within reach of range's final location.
- Do not use an extension cord.
- The wiring diagram is located on the back of the range in a clear plastic bag.

NOTE: The metal chassis of the range must be grounded in order for the control panel to work. If the metal chassis of the range is not grounded, no keypads will operate. Check with a qualified electrician if you are in doubt as to whether the metal chassis of the range is grounded.

GAS SUPPLY REQUIREMENTS

⚠ WARNING

Explosion Hazard

Use a new CSA International approved gas supply line.

Install a shut-off valve.

Securely tighten all gas connections.

If connected to LP, have a qualified person make sure gas pressure does not exceed 14” (36 cm) water column.

Examples of a qualified person include:

- licensed heating personnel
- authorized gas company personnel
- authorized service personnel

Failure to do so can result in death, explosion or fire.

Observe all governing codes and ordinances.

IMPORTANT: This installation must conform with all local codes and ordinances. In the absence of local codes, installation must conform with American National Standard, National Fuel Gas Code ANSI Z223.1 - latest edition or CAN/CGA B149 - latest edition.

IMPORTANT: Leak testing of the range must be conducted according to the manufacturer’s instructions.

TYPE OF GAS

Natural Gas:

This range is design-certified by CSA International for use with natural gas or, after proper conversion, for use with LP gas.

- This range is factory-set for use with Natural gas. The model/serial rating plate located on the right side oven door trim has information on the types of gas that can be used. If the types of gas listed do not include the type of gas available, check with the local gas supplier.

LP Gas Conversion:

Conversion must be performed by a qualified service technician. The qualified agency performing this work assumes the gas conversion responsibility.

No attempt shall be made to convert the appliance from the gas specified on the model/ serial rating plate for use with a different gas without consulting the serving gas supplier. See “GAS CONVERSION” section.

GAS SUPPLY LINE

Provide a gas supply line of 3/4” (1.9 cm) rigid pipe to the range location. A smaller size pipe on longer runs may result in insufficient gas supply. Pipe-joint compounds that resist the action of LP gas must be used. With LP gas, piping or tubing size can be 1/2” (1.3 cm) minimum. Usually, LP gas suppliers determine the size and materials used in the system.

Flexible metal appliance connector:

- If local codes permit, a new CSA design-certified, 4 - 5 ft (122 - 152.4 cm) long, 1/2” (1.3 cm) or 3/4” (1.9 cm) I.D., flexible metal appliance connector may be used for connecting range to the gas supply line.

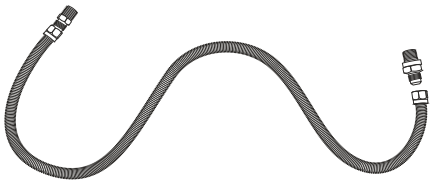

- A 1/2” (1.3 cm) male pipe thread is needed for connection to the female pipe threads of the inlet to the appliance pressure regulator.
- Do not kink or damage the flexible metal tubing when moving the range.

Rigid pipe connection:

The rigid pipe connection requires a combination of pipe fittings to obtain an in-line connection to the range. The rigid pipe must be level with the range connection. All strains must be removed from the supply and fuel lines so range will be level and in line.

Gas shutoff valve:

A manual gas line shut-off valve must be installed in an easily accessible location. Do not block access to shut-off valve. The valve is for turning on or shutting off gas to the range.

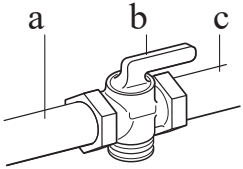

a Gas Supply Line
b Shutoff Valve “Open” Position
c To Range

GAS PRESSURE REGULATOR

The gas pressure regulator supplied with this range must be used. The inlet pressure to the regulator should be as follows for proper operation:

	Natural gas	LP gas
Minimum pressure	4” WCP	10” WCP
Maximum pressure	7” WCP	11” WCP

Contact local gas supplier if you are not sure about the inlet pressure.

Burner Input Requirements

Input ratings shown on the model/serial rating plate are for elevations up to 2,000 ft (609.6 m).

For elevations above 2,000 ft (609.6 m), ratings are reduced at a rate of 4% for each 1,000 ft (304.8 m) above sea level (not applicable for Canada).

GAS SUPPLY PRESSURE TESTING

Gas supply pressure for testing regulator must be at least 1” (2.5 cm) water column pressure above the manifold pressure shown on the model/serial rating plate.

Line pressure testing above 0.5 psi gauge (14” WCP)

The range and its individual shutoff valve must be disconnected from the gas supply piping system during any pressure testing of that system at test pressures in excess of 0.5 psi (3.5 kPa).

Line pressure testing at 0.5 psi gauge (14” WCP) or lower

The range must be isolated from the gas supply piping system by closing its individual manual shutoff valve during any pressure testing of the gas supply piping system at test pressures equal to or less than 1/2 psi (3.5 kPa).

IMPORTANT: This appliance shall be installed only by authorized persons and in accordance with the manufacturer's installation instructions, local gas fitting regulations, municipal building codes, electrical wiring regulations, local water supply regulations.

UNPACK RANGE

⚠ WARNING

Excessive Weight Hazard

Use two or more people to move and install range.

Failure to do so can result in back or other injury.

1.Remove shipping materials, tape and film from the range. Keep cardboard bottom under range. Do not dispose of anything until the installation is complete.

2.Remove oven racks and parts package from oven and shipping materials. **3.**To remove cardboard bottom, first take 4 cardboard corners from the carton. Stack one cardboard corner on top of another. Repeat with the other 2 corners. Place them lengthwise on the floor behind the range to support the range when it is laid on its back.

4.Using two or more people, firmly grasp the range and gently lay it on its back on the cardboard corners.

5.Remove cardboard bottom.

NOTES:

- The leveling legs can be adjusted while the range is on its back.
- To place range back up into a standing position, put a sheet of cardboard or hardboard on the floor in front of range to protect the flooring. Using two or more people, stand range back up onto the cardboard or hardboard.

INSTALL ANTI-TIP DEVICE

⚠ WARNING

Tip Over Hazard

- A child or adult can tip the range and be killed.
- Install anti-tip bracket to floor or wall per installation instructions.
- Slide range back so rear range foot is engaged in the slow of the anti-top bracket.
- Re-engage the anti-tip bracket if range is moved.
- Do not operate the range without anti-tip bracket installed and engaged.
- Failure to follow these instructions can result in death or serious burns to children and adults.

IMPORTANT:

- An anti-tip bracket is provided with the range. The anti-tip bracket uses a rear range foot to secure the range to the floor or wall.
- Attach the anti-tip bracket to the floor or wall so that the rear range foot will be centered within the bracket when the range is pushed into its final position.

1.Remove the anti-tip bracket and screws from the parts bag.

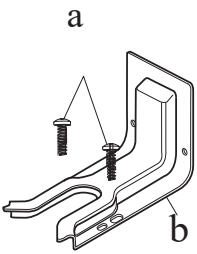

a 16 x 1⅝” Screws (2)

b Anti-tip Bracket

NOTE: The anti-tip bracket must be securely mounted to the subfloor or wall. The flooring’s thickness may require longer screws to anchor bracket to subfloor.

2.Place the bracket so that the back of the bracket is against the rear wall and the side edge of the bracket is 3/8” to 1/2” from the adjacent cabinet.

NOTE: If there is no adjacent cabinet, place the bracket so that the edge of the bracket is 3/8” to 1/2” in from the range side panel. If the countertop overhangs the cabinet, offset the bracket from the cabinet by the depth of the overhang plus an additional 3/8” to 1/2”.

3.Using the anti-tip bracket as a template, mark the two holes for either a Floor Wood, Floor Concrete, or Wall installation, as shown.

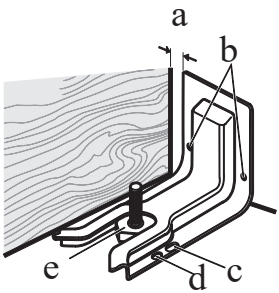

a: Distance from Adjacent Cabinet (3/8” to 1/2” [0.95 cm to 1.27 cm])

b: Wall Holes

c: Concrete Floor Holes

d: Wood Floor Holes

e: Rear Range Foot

4.Drill two pilot holes where marked. Follow the instructions specific to your construction.

NOTE: A nail or awl may be used to create a pilot hole, if a drill is not available. For concrete construction 1/4” x 1 ½ “ Lag Bolts and 1/2” O.D. Sleeve Anchors are required.

Wood

- Floor - Drill a 1/8” pilot hole, as shown.

  NOTE: Contact a qualified floor covering installer for the best procedure for drilling mounting holes through your type of floor covering.

- Wall - Drill an angled 1/8” pilot hole, as shown. Concrete
- Drill the size hole recommended for the anchors into the concrete at the center of the holes identified as Floor Concrete or Wall.

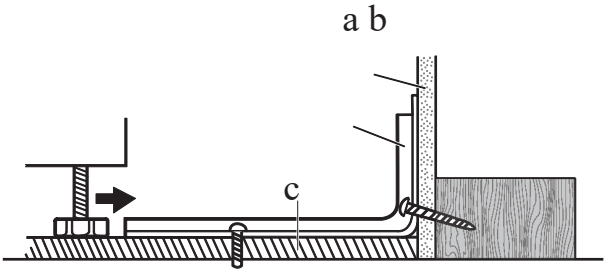

a Wall

b Anti-tip Bracket

c Floor

5.Install the anti-tip bracket.

Wood

- Using the two screws (provided) fasten the anti-tip bracket to the floor or wall.

  NOTE: The screw must enter wood or metal.

Concrete

- Insert the sleeve anchor into the drilled holes and then insert the lag bolts through the anti-tip bracket and into the floor or wall. The bolts must be properly tightened as recommended for the hardware.

INSTALL BACKSPLASH

•Install the backsplash to rear of range with the screws provided.

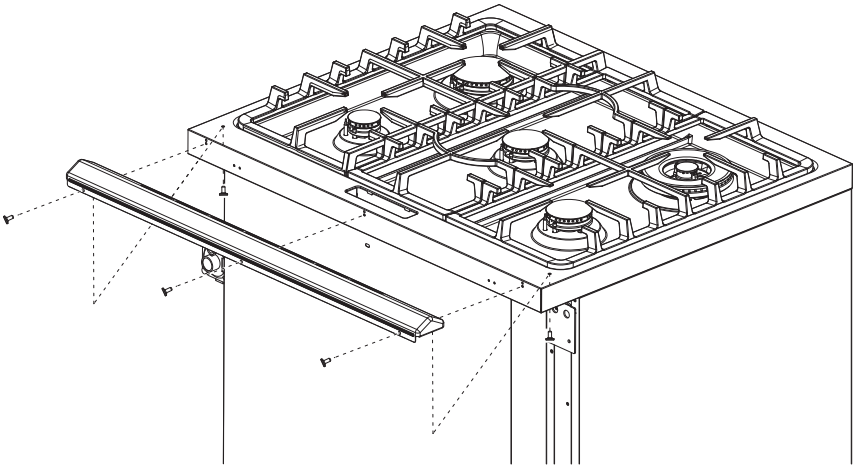

GAS CONNECTION

⚠ WARNING

Explosion Hazard

Use a new CSA International approved gas supply line.

Install a shut-off valve.

Securely tighten all gas connections.

If connected to LP, have a qualified person make sure gas pressure does not exceed 14" (36 cm) water column.

Examples of a qualified person include:

- licensed heating personnel
- authorized gas company personnel
- authorized service personnel

Failure to do so can result in death, explosion or fire.

This appliance shall be installed only by authorized persons and in accordance with the manufacturer's installation instructions, local gas fitting regulations, municipal building codes, electrical wiring regulations, local water supply regulations.

This range is factory-set for use with Natural gas. To use this range with Propane gas, see the "GAS CONVERSION section before connecting this range to the gas supply. Gas conversions from Natural gas to Propane gas or from Propane gas to Natural gas must be done by a qualified installer.

TYPICAL FLEXIBLE CONNECTION

1. Apply pipe-joint compound made for use with LP gas to the smaller thread ends of the flexible connector adapters.

2. Attach one adapter to the gas pressure regulator and the other adapter to the gas shutoff valve. Tighten both adapters, being certain not to move or turn the gas pressure regulator.

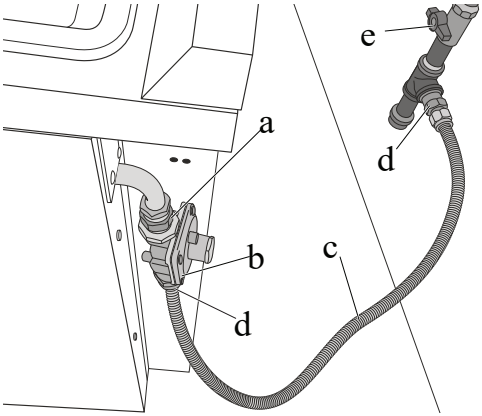

a: Adapter (provided) Gas

b: Pressure Regulator Gas

c: Supply Line

d: Adapters (From Gas Supply Line Kit)

e: Gas Shutoff Valve

3.Use a 15/16” (2.4 cm) combination wrench and channel lock pliers to attach the flexible connector to the adapters. Check that connector is not kinked.

TYPICAL RIGID PIPE CONNECTION

A combination of pipe fittings must be used to connect the range to the existing gas line. Your connections may be different, according to the supply line type, size and location.

1.Apply pipe-joint compound made for use with LP gas to all pipe thread connections.

2. Using a pipe wrench to tighten, connect the gas supply to the range.

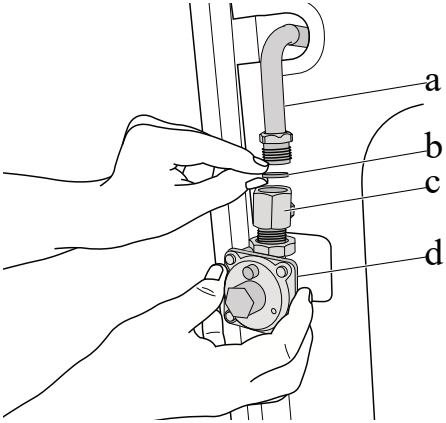

a Gas Line from Range

b Washer (provided)

c Adapter (provided)

d Gas Pressure Regulator (provided)

COMPLETE CONNECTION

⚠ WARNING

Electrical Shock Hazard

Disconnect power before servicing.

Plug into a grounded 3-prong outlet.

Do not use an adapter or an extension cord.

Failure to do so can result in death, fire, or electrical shock

1.Open the manual shutoff valve in the gas supply line. The valve is open when the handle is parallel to the gas pipe.

2.Test all connections by brushing on an approved noncorrosive leak-detection solution. If bubbles appear, a leak is indicated. Correct any leak found.

3.Remove, if any, packaging tapes securing the burners on the surface. If the cooktop burner bases and caps are not pre-installed, remove them from package containing parts, align and place the burner bases and caps accordingly.

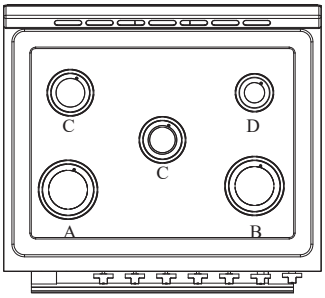

Note: Align notches in burner caps with pins in burner base. Burner caps should be level when properly positioned. If burner caps are not properly positioned, surface burners will not light.

Auxiliary Burner
Semi Rapid Burner
Rapid Burner

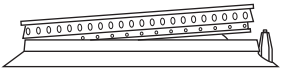

Incorrectly Positioned

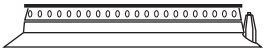

Correctly Positioned

4.Place burner grates over burners and caps.

5.Plug in range or reconnect power.

ADJUST FLAME HEIGHT

Check and adjust the height of top burner flames. The cooktop “low” burner flame should be a steady blue flame approximately 1/4” (6 mm) high. Propane gas flames have a slightly yellow tip.

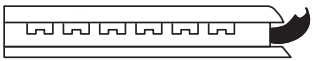

Low flame

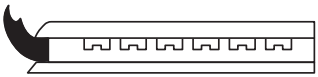

High flame

If burners do not light properly:

1.Turn burner control knob to the “OFF” position.

2.Check that the range is plugged in. Check that the circuit breaker has not tripped or the household fuse has not blown.

3.Check that the gas shutoff valves are set to the “open” position. 4.Check that burner caps are properly positioned on burner bases.

To adjust standard burner:

IMPORTANT: Adjustments must be made with two other burners in operation on a medium setting. This prevents the upper row of flames from being set too low, resulting in the flame being extinguished when other burners are turned on.

The flame can be adjusted using the adjustment screw in the center of the valve stem. The valve stem is located directly behind the control knob.

1.Light the burner and turn the knob to the lowest setting (MIN). 2.Pull and remove the control knob.

3.Insert a small, flat-blade screwdriver into the adjustment screw, and slowly turn the screw until the flame appearance is correct.

- Open the valve more if the flames are too small or fluttered.
- Close the valve more if the flames are too large.

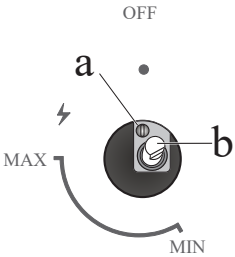

a Adjustment Screw
b Control Knob Stem

4.Replace the control knob.

5.Test and check the flame by turning the control knob from the lowest to the highest settings.

NOTE: For burners (on some models) with safety valve, make sure that the regulation obtained is sufficient to maintain heating of the thermocouple. If it is not, increase the minimum flame.

ABNORMAL OPERATION

ANY OF THE FOLLOWING ARE CONSIDERED TO BE ANBORMAL OPERATION AND MAY REQUIRE SERVICING:

- Yellow tipping of the hob burner flame
- Sooting up of cooking utensils.
- Burners not igniting properly.
- Burners failing to remain lit.
- Burners extinguished by oven door.
- Gas valves, which are difficult to turn.

IN CASE THE APPLIANCE FAILS TO OPERATE CORRECTLY, CONTACT THE AUTHORIZED SERVICE PROVIDE IN YOUR AREA.

THE BURNERS REQUIRE NO REGULATION OF THE PRIMARY AIR.

LEVEL RANGE

IMPORTANT: Do not operate the range if its rear foot is not completely engaged in the anti-tip bracket. Never completely remove the leveling legs or the range will not be secured to the anti-tip device properly.

1. Slide range into final location, making sure rear leveling leg slides into the anti- tip bracket. Leave a 1” (2.5 cm) gap between the back of the range and the back wall.
2. Check that the range is level by placing a level on the oven bottom. If needed, use a wrench to adjust the height of the leveling legs until the range is level from side to side and from front to back.

NOTE: The range must be level for optimum cooking and baking performance.

VERIFY ANTI-TIP BRACKET ENGAGEMENT

1.Place the outside of your foot against the bottom of the front panel to keep the range from moving, and then grasp the back of the range, as shown.

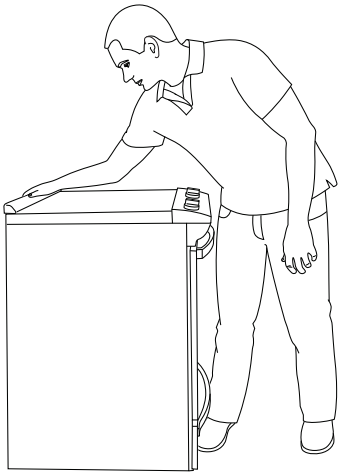

2.Slowly attempt to tilt the range forward.

- If you encounter immediate resistance, the range foot is engaged in the anti-tip bracket. Range installation is completed.
- If the rear of the range lifts more than 1/2” (1.3 cm) off the floor without resistance, stop tilting the range and lower it gently back to the floor. The range foot is not engaged in the anti-tip bracket. Proceed to Steps 3 and 4.

  IMPORTANT: If there is a snapping or popping sound when tilting the range, the range may not be fully engaged in the bracket. Check to see if there are obstructions keeping the range from sliding to the wall or keeping the range foot from sliding into the bracket. Verify that the bracket is held securely in place by the mounting screws.

3.Slide the range forward, and verify that the anti-tip bracket is securely attached to the floor or wall.

4.Slide range back so the rear range foot is inserted into the slot of the anti-tip bracket.

IMPORTANT: If the range is pulled away from the wall for any reason, always verify anti-tip bracket engagement again.

GAS CONVERSION

⚠ WARNING

FIRE AND EXPLOSION HAZARD

- Use a new CSA International approved gas supply line and install a shut-off valve for new installations.
- Securely tighten all gas connections.
- If connected to LP, have a qualified person make sure gas pressure does not exceed the maximum pressure listed in the “Gas Supply Requirement” section.
- Examples of a qualified person include:
  - licensed heating personnel
  - authorized gas company personnel
  - authorized service personnel
- Failure to do so can result in death, explosion or fire.

⚠ WARNING

TIP OVER HAZARD

- A child or adult can tip the range and be killed.
- Install anti-tip bracket to floor or wall per installation instructions.
- Slide range back so rear range foot is engaged in the slot of the anti-tip bracket.
- Re-engage the anti-tip bracket if range is moved.
- Do not operate the range without anti-tip bracket installed and engaged.
- Failure to follow these instructions can result in death or serious burns to children and adults.

This range is factory-set for use with Natural gas (NG).

IMPORTANT: Gas conversions must be done by a qualified service technician in accordance with the manufacturer's instructions and all codes and requirements of the authority having jurisdiction. The qualified agency performing this work assumes the gas conversion responsibility.

CONVERT GAS PRESSURE REGULATOR

1. Turn manual shutoff valve to the closed position.

2. Unplug range or disconnect power.

3. Move the range out from the wall or installation space. Locate the gas pressure regulator on the back of the range.

   IMPORTANT: Do not remove the gas pressure regulator.

4. Unscrew the metal cover in the center of the gas pressure regulator with a wrench.

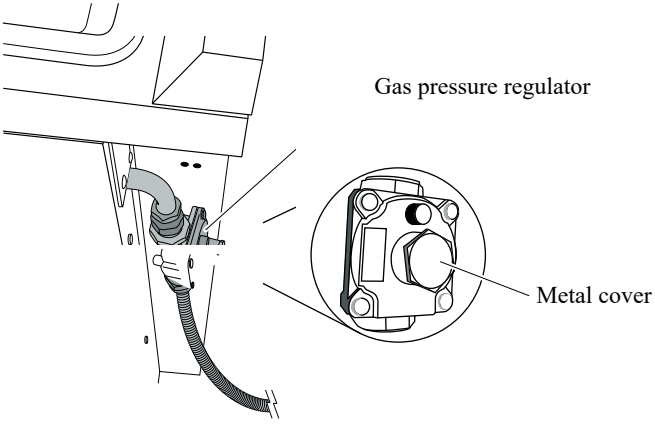

5. Remove the regulator cap on the metal cover. Orient the regulator cap for the fuel type being used and place it back into the metal cover.

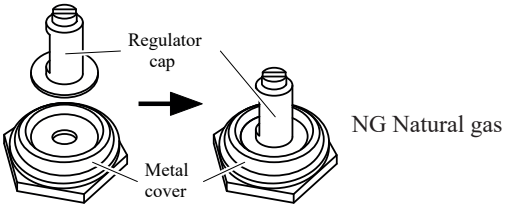

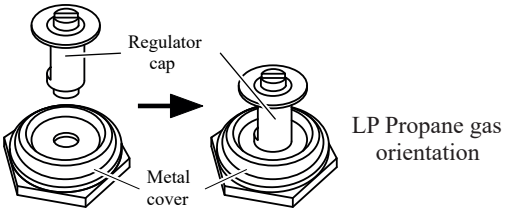

6. Screw and tighten the metal cover back into the gas pressure regulator with a wrench.

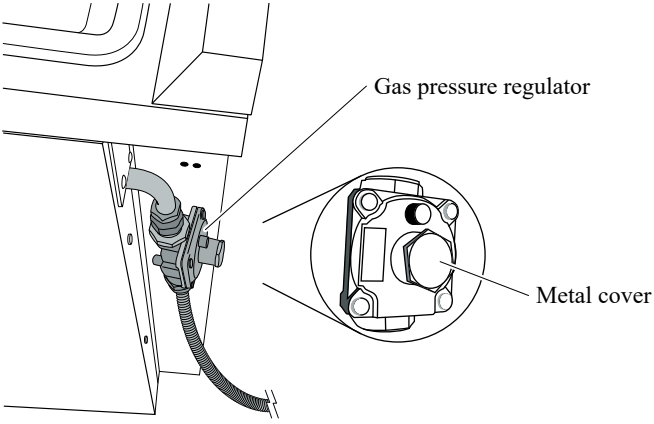

CONVERT SURFACE BURNERS

IMPORTANT: Make sure to save the orifices that have just been replaced in the conversion.

Tool Needed

- 9/32” (7 mm) nut driver

NG/LP Orifice Chart for Surface and Oven Burners

Burner	Placement	Orifice Type	Orifice Size (mm)	Burner Rating
Rapid	Front Left	NG	1.70	12,000 BTU
		LP	1.05	
Rapid	Front Right	NG	1.70	12,000 BTU
		LP	1.05	
Semi Rapid	Center	NG	1.18	6,000 BTU
		LP	0.72	
Semi Rapid	Rear Left	NG	1.18	6,000 BTU
		LP	0.72	
Auxiliary	Rear Right	NG	0.90	3,500 BTU
		LP	0.56	
Broil	Oven Top	NG	1.40	8,500 BTU
		LP	0.83	
Bake	Oven Bottom	NG	1.85	14,000 BTU
		LP	1.10	

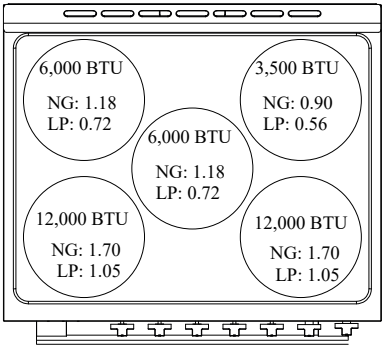

1. If installed, remove the burner grates, burner caps, and the burner bases.

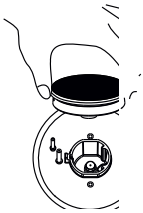

2. Remove the existing orifices with a 9/32” (7 mm) nut driver.

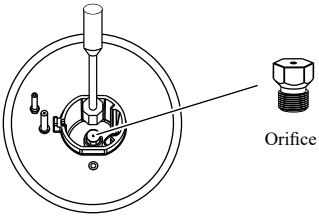

3. Replace the orifices with the correct fuel type orifices. Gas orifices are stamped with a size number. Refer to the orifice chart earlier for correct Natural gas and LP gas orifice sizes and proper placement.

IMPORTANT: Keep and store the orifices that have just been replaced in case of re-installation with another gas.

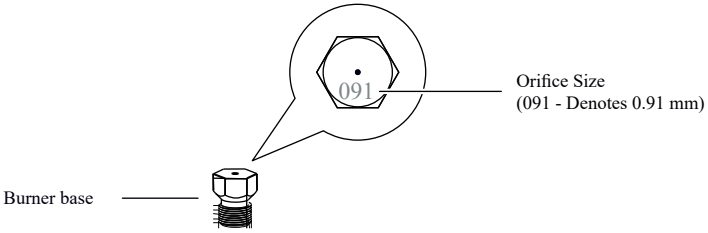

4. Replace the burner base, burner caps, and burner grates.

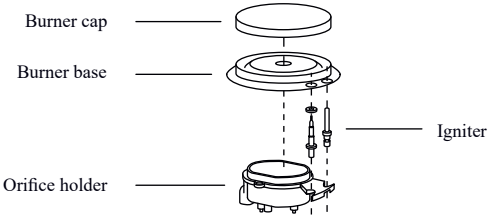

CONVERT OVEN BURNERS

This product cannot be converted to Natural gas or LP gas by adjusting or tightening the oven orifices. The orifices must be replaced.

Converting Broil Burner

1. Unscrew Front Bracket

Locate the bracket at the front of the broiler. Remove the screw.

2. Remove the Burner

Carefully slide the burner forward and out of the socket, without severing or damaging the wire attached. Carefully lay the burner down as shown in the image to the right.

3. Change the Burner Orifice

With the burner out of the way look for the orifice as shown. Continue with changing the orifice.

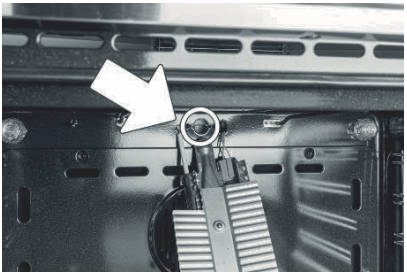

Converting Bake Burner

1. Remove Bake Burner Cover

   Open your oven door and unscrew the back two screws of bake burner cover. Remove the bake burner cover.

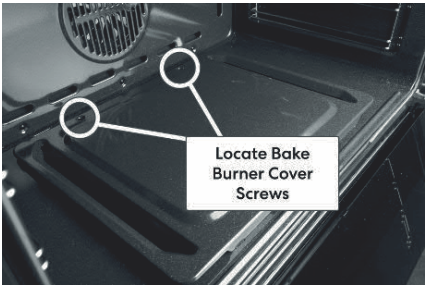

2. Remove Flame Spread Plate

   Unscrew the four screws of the flame spread plate. Remove the flame spread plate.

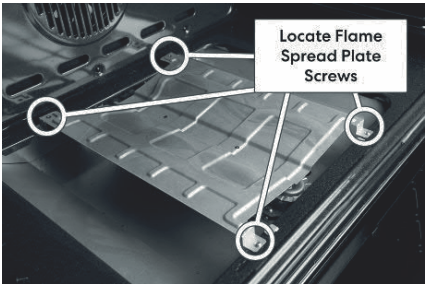

3. Slide Out Burner

   Unscrew the front two screws holding the burner in place. Slide out the burner up and towards oven door out of the socket, careful not to sever or pull on the wire.

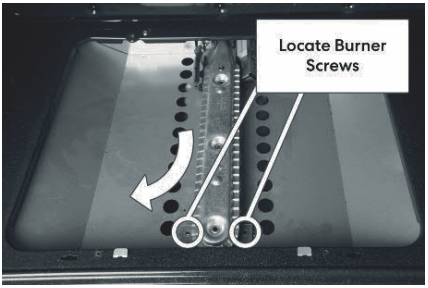

4. Change the Burner Orifice

   Move the burner carefully to gain access to the burner orifice, careful not to sever or pull on the wire. Proceed with changing the orifice.

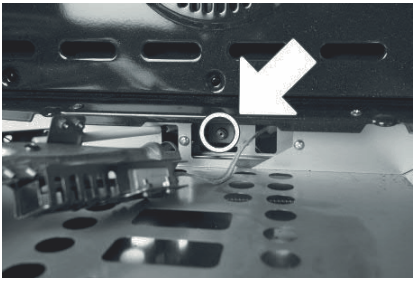

COMPLETE GAS CONVERSION

1. Open shutoff valve in the gas supply line.

2. Plug in range or reconnect power.

- Refer to “Gas Connection” section in the “Installation Instructions” section for proper connection of the range to the gas supply.
- Refer to “Complete Installation” section to complete this procedure.
- Refer to the “Adjust Flame Height” section for surface burner flame adjustments.

IMPORTANT: You may have to adjust the low setting for each cooktop burner.

FORNO

Espresso

Customer Support: Call 1-866-231-8893 or email: info@forno.ca

ENGLISH

FORNO

Espresso

GAS RANGE

MODEL NUMBER SERIES

FFSGS1116-30 | FFSGS1116-30BLK | FFSGS1116-30WHT

INSTRUCTION MANUAL

Read these instructions carefully before using your appliance, and keep it carefully.
If you follow the instructions, your appliance will provide you with many years of good service.

TABLE OF CONTENTS

Customer Care	5
Warning	6
Important Safety	7
Names of Parts and Accessories	9
Installations:	
• Anti-tip Bracket	10
• Handle	11
Control Panel	12
Operating Instruction	
• Cookware	13
• Oven Control.....	14
Care and Maintenance	16
Troubleshooting	17
Warranty	20

GAS RANGE

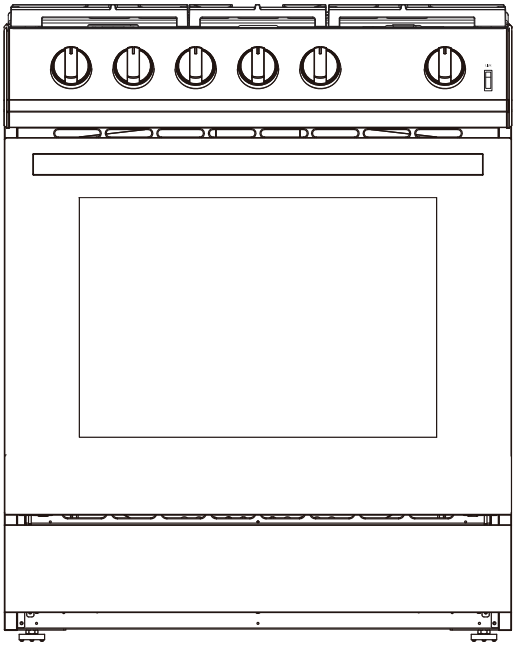

MODEL NUMBER SERIES

FFSGS1116-30 | FFSGS1116-30BLK | FFSGS1116-30WHT

Customer Care

Thank you for purchasing a Frono product. Please read the entire instruction manual before operating your new appliance for the first time. Whether you are an occasional user or an expert, it will be beneficial to familiarize yourself with the safety practices, features, operation and care recommendations of your appliance.

Both the model and serial number are listed inside the product. For warranty purposes, you will also need the date of purchase .

Record this information below for future reference.

Model And Serial Number Location

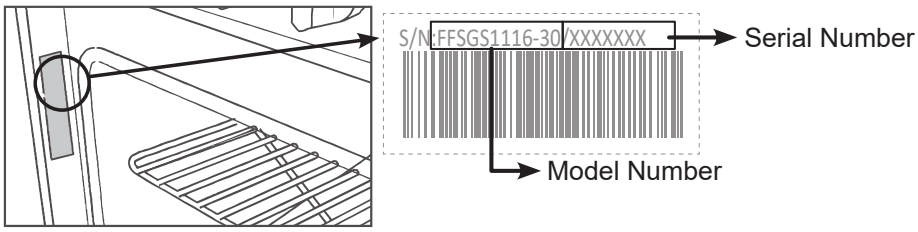

Product Information
Model Number : _____
Serial Number : _____
Date of Purchase :_____
Purchase Address And Phone : _____
_____
_____

Service Information
Use these numbers in any correspondence or services calls concerning your product.
If you received a damaged product, immediately contact Forno.
To save time and money, before you call for serviced, check the troubleshooting guide. It listed the causes of minor operation problems that you can correct yourself.

“Need some quick help? Simply scan the qr code and get access to our fast support form. We’re always here to assist you with any questions or concerns you may have. So, don’t hesitate to reach out!”

Services in Canada and Untied States

Keep the instruction manual handy to answer your questions. If you don’t understand something or need more assistance, please visit our website for fast support. Please provide us your name, number, address,serial number of the product that troubleshooting, proof of purchase, and a short description of the issue. A customer service representative will contact you as soon as possible. All warranty work needs to be authorized by FORNO customer service. All our authorized service providers are carefully selected and rigorously trained by us.

WARNING

FOR YOUR SAFETY

Your safety and the safety of others are very important.

We have provided many important safety messages in this manual and on your appliance. Always read and obey all safety messages.

This is the safety alert symbol. This symbol alerts you to potential hazards that can kill or hurt you and others. Al l safety messages will follow the safety alert symbol and either the word “DANGER,” “WARNING” or “CAUTION.” These words mean:

DANGER

- You can be killed or seriously injured if you don’t immediately follow instructions.

WARNING

- You can be killed or seriously injured if you don’t follow instructions.

CAUTION

- A potentially hazardous situation which, if not avoided, could result in minor or moderate injury.

All safety messages will tell you what the potential hazard is, tell you how to reduce the chance of injury, and tell you what can happen if the instructions are not followed.

WARNING : This product can expose you to chemicals including [Lead, lead and lead compound, which is [are] known to the state of California to cause cancer and birth defects or other reproductive harm. For more information go to www.P65Warning.ca.gov.

In the State of Massachusetts, the following installation instructions apply:

- Installations and repairs must be performed by a qualified or licensed contractor, plumber, or gas fitter qualified or licensed by the State of Massachusetts.
- If using a ball valve, it shall be a T-handle type.
- A flexible gas connector, when used, must not exceed 3 feet.

WARNING

Fire Hazard

If the information in this manual is not followed exactly, a fire or explosion may result causing property damage, personal injury or death.

- Do not store or use gasoline or other flammable vapors and liquids in the vicinity of this or any other appliance.

- WHAT TO DO IF YOU SMELL GAS
  - Do not try to light any appliance.
  - Do not touch any electrical switch.
  - Do not use any phone in your building.
  - Clear the room, building, or area of all occupants.
  - Immediately call your gas supplier from a neighbor's phone. Follow the gas supplier's instructions.
  - If you cannot reach your gas supplier, call the fire department.

- Installation and service must be performed by a qualified installer, service agency or the gas supplier.

WARNING

NEVER OPERATE THE TOP SURFACE COOKING SECTION OF THIS APPLIANCE UNATTENDED.

- Failure to follow this warning statement could result in fire, explosion, or burn hazard that could cause property damage, personal injury, or death.
- If a fire should occur, keep away from the appliance and immediately call your fire department.

DO NOT ATTEMPT TO EXTINGUISH AN OIL/GREASE FIRE WITH WATER

WARNING

Tip Over Hazard

- A child or adult can tip the range and be killed.
- Install anti-tip bracket to floor or wall per installation instructions.
- Slide range back so rear range foot is engaged in the slow of the anti-tip bracket.
- Re-engage the anti-tip bracket if range is moved.
- Do not operate the range without anti-tip bracket installed and engaged.
- Failure to follow these instructions can result in death or serious burns to children and adults.

MAKING SURE THE ANTI-TIP BRACKET IS INSTALLED :

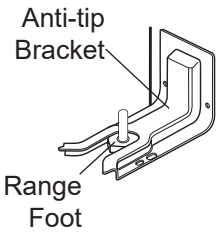

- Slide range forward.
- Look for the anti-tip bracket securely attached to floor and wall.
- Slide range back so rear range foot is under anti-tip bracket.

WARNING:
Gas leaks cannot always be detected by smell.
Gas suppliers recommend that you use a gas detector approved by UL or CSA.
For more information, contact your gas supplier.

WARNING: Do not install a ventilation system that blows air downward toward this cooking appliance. This type of ventilation system may cause ignition and combustion problems with this cooking appliance resulting in personal injury or unintended operation.

Important Safety Instructions

• WARNING: TO REDUCE THE RISK OF TIPPING OF THE RANGE, THE RANGE MUST BE SECURED BY PROPERLY INSTALLED ANTI-TIP DEVICES. TO CHECK IF THE DEVICES ARE INSTALLED PROPERLY, SLIDE THE RANGE COMPLETELY FORWARD, LOOK FOR THE ANTI-TIP BRACKET SECURELY ATTACHED TO THE FLOOR BEHIND THE RANGE, AND SLIDE RANGE COMPLETELY BACK UNTIL THE REAR RANGE FOOT IS UNDER ANTI-TIP BRACKET.

- WARNING: NEVER use this appliance as a space heater to heat or warm the room. Doing so may result in carbon monoxide poisoning and overheating of the oven.
- WARNING: NEVER cover any slots, holes, or passages in the oven bottom or cover an entire rack with materials such as aluminum foil. Doing so blocks airflow through the oven and may cause carbon monoxide poisoning. Aluminum foil linings may also trap heat, causing a fire hazard.
- CAUTION: Do not store items of interest to children in cabinets above a range or on the back guard of a range –children climbing onto the range to reach items could be seriously injured.
- DO NOT LEAVE Children Alone –Children should not be left alone or unattended in areas where the range is in use. They should never be allowed to sit or stand on any part of the range.
- Wear Proper Apparel – Loose-fitting or hanging garments should never be worn while using the range.
- User Servicing – Do not repair or replace any part of the range unless specifically recommended in the manual. All other servicing should be referred to a qualified technician.
- Storage in or on Range –Flammable materials should not be stored in an oven or near surface units.
- This appliance is not intended for storage.
- DO NOT USE WATER on Grease Fires – Smother fire or flame, use a dry chemical or foam-type extinguisher.
- Make sure your pot holders is dry. – Moist or damp pot holders on hot surfaces may result in burns from steam. Do not let pot holder touch hot heating elements. Do not use a towel or other bulky cloth.
- DO NOT TOUCH SURFACE UNITS OR AREAS NEAR UNITS – Surface units may be hot even though they are dark in color. Areas near surface units may become hot enough to cause burns. During and after use, do not touch, or let clothing or other flammable materials contact surface units or areas near units until they have had sufficient time to cool. Among those areas are the cook top and surfaces facing the cook top.
- Never Leave Surface Units Unattended at High Heat Settings – Boil over causes smoking and greasy spillovers that may ignite.
- Glazed Cooking Utensils – Only certain types of glass, glass/ceramic, ceramic, earthenware, or other glazed utensils are suitable for range-top service without breaking due to sudden temperature changes.
- Utensil Handles Should Be Turned Inward and Not Extend Over Adjacent Surface Units – To reduce the risk of burns, ignition of flammable materials, and spillage due to unintentional contact with the utensil, the handle of a utensil should be positioned so that it is turned inward, and does not extend over adjacent surface units.
- Disconnect power before servicing.
- Proper Installation – The range, when installed, must be electrically grounded by local codes or, in the absence of local codes, with the National Electrical Code, ANSI/NFPA 70. In Canada, the range must be electrically grounded by Canadian Electrical Code. Be sure the range is properly installed and grounded by a qualified technician.
- Injuries may result from the misuse of appliance doors or drawers such as stepping, leaning, or sitting on the doors or drawers.
- Maintenance – Keep the range area clear and free from combustible materials, gasoline, and other flammable vapors and liquids.
- Maintenance – Keep the range area clear and free from combustible materials, gasoline, and other flammable vapors and liquids.
- Top burner flame size should be adjusted so it does not extend beyond the edge of the cooking utensil. This instruction is based on safety considerations.
- Do not use replacement parts that have not been recommended by the manufacturer (e.g. parts made a home using a 3D printer).
- Clean Cook top with Caution – If a wet sponge or cloth is used to wipe spills on a hot cooking area, be careful to avoid steam burn. Some cleaners can produce noxious fumes if applied to a hot surface.
- Do not use replacement parts that have not been recommended by the manufacturer (e.g. parts made at home using a 3D printer).
- Do Not Heat Unopened Food Containers. - Build-up of pressure may cause the container to burst and result in injury.
- Keep Oven Vent Ducts free from obstructions.
- Never broil with door open. Open-door broiling is not permitted due to overheating of control knobs.
- Oven Racks Placement – Always place oven racks in the desired location while the oven is cool. If the rack must be moved while the oven is hot, do not let the pot holder in contact with the heated element in oven.
- Care must be taken to prevent aluminum foil and meat probes from contacting heating burner.
- DO NOT TOUCH HEATING ELEMENTS OR INTERIOR SURFACES OF OVEN – Heating elements may be hot even though they are dark in color. The interior surfaces of an oven become hot enough to cause burns. During and after use, do not touch, or let clothing or other flammable materials in contact with heating elements or interior surfaces of the oven until they have had sufficient time to cool. Other surfaces of the appliance may become hot enough to cause burns – among these surfaces are cooktop, burners, grates, oven vent openings and surfaces near these openings, oven doors windows of oven doors, and crevices around the oven doors
- Top burner flame size should be adjusted so it does not extend beyond the edge of the cooking utensil.
- Have the installer show you the location of the range gas shut-off valve and how to turn it off if necessary.
- Proper Disposal of Your Appliance – Dispose of or recycle your appliance in accordance with Federal and Local Regulations. Contact your local authorities for the environmentally safe disposal or recycling of your appliance.

For units with ventilating hood –

- Clean Ventilating Hoods Frequently – Grease should not be allowed to accumulate on hood or filter.
- When flambé cooking under the vent hood, turn the fan on.

For self-cleaning ranges –

- Do Not Clean Door Gasket – The door gasket is essential for a good seal. Care should be taken not to rub, damage, or move the gasket.
- Do Not Use Oven Cleaners – No commercial oven cleaner or oven liner protective coating of any kind should be used in or around any part of the oven.
- Clean Only Parts Listed in Manual.
- Before Self-Cleaning the Oven – Remove broiler pan and other utensils. Wipe off all excessive spillage before initiating the cleaning cycle.

READ AND SAVE THESE INSTRUCTIONS

Names of Parts and Accessories

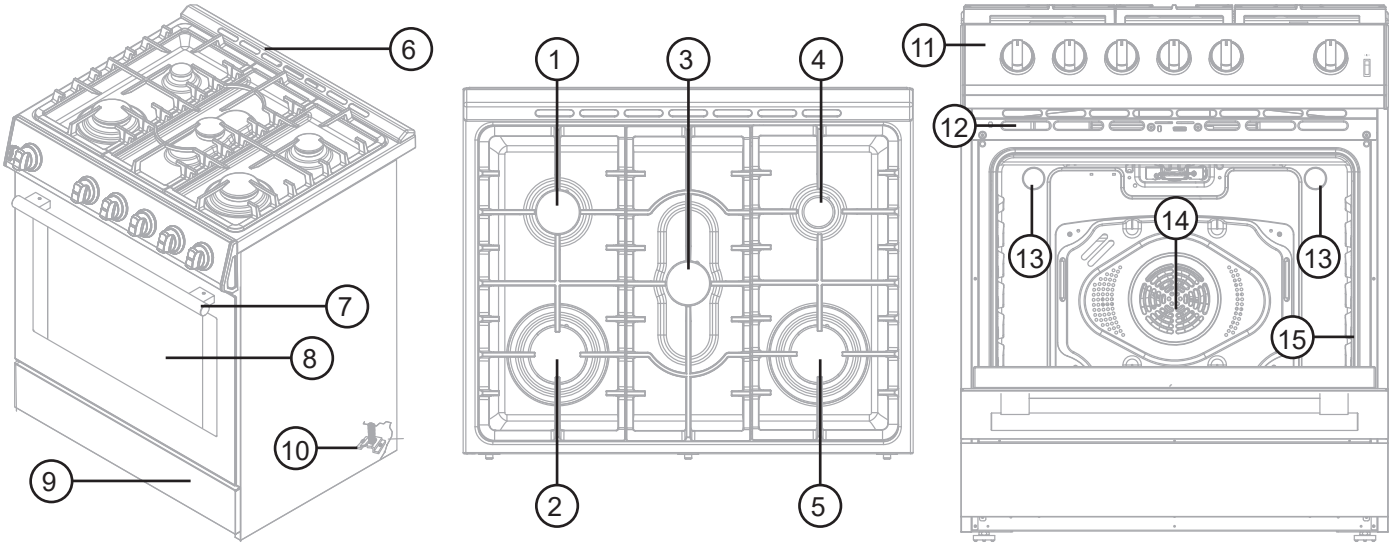

Numbers	Parts
1	Left, Rear Burner 6000 BTU
2	Left, Front Burner 12000 BTU
3	Center Burner 6000 BTU
4	Right, Rear Burner 3500 BTU
5	Right, Front Burner 12000 BTU
6	Backsplash
7	Handle
8	Oven Door Window

Numbers	Parts
9	Kick Plate
10	Anti-tip Bracket
11	Control Panel
12	Oven Vent
13	Oven Light
14	Convection Fan
15	Door Gasket

12x Forno Knobs
(Stainless Steel 6x & ***Antique Brass** 6x)

12x Forno Bezel
(Stainless Steel 6x & ***Antique Brass** 6x)

2x Forno Door Handle
(Stainless Steel & ***Antique Brass**)

2x Racks

1x Backsplash

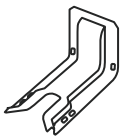

1x Anti-Tip Bracket

5x Screws (M4*8)
(For blacksplash Installation)

2x Screws (M5*45)
(For Anti-tip bracket)

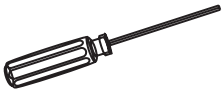

1x Hexagon wrench

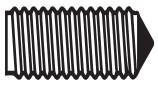

2x Screws for the handle

1x Logo

***NOTE: Antique Brass** hardware is only provided with the black and white color variant, the stainless steel only has the stainless steel included

Packing List

S/N	Name	Quantity
1	Instruction Manual	1
2	Installation Guide	1
3	Anti-Tip Bracket	1
4	Screwdriver	1
5	Screw (M4*8)	5
6	Screw (M5*45)	2
7	Backplash	1
8	Oven Rack	2
9	Knob Antique Brass	6
10	Knob Stainless Steel	6
11	Knob base Antique Brass	6
12	Knob base Stainless Steel	6
13	Handle Antique Brass	1
14	Handle Stainless Steel	1
15	Gas Pressure Regulator	1
16	Gas Pipe Adapter With Washers	1
17	Lp Gas Conversion Kit	7
18	Flame Adjustment Accessory	1

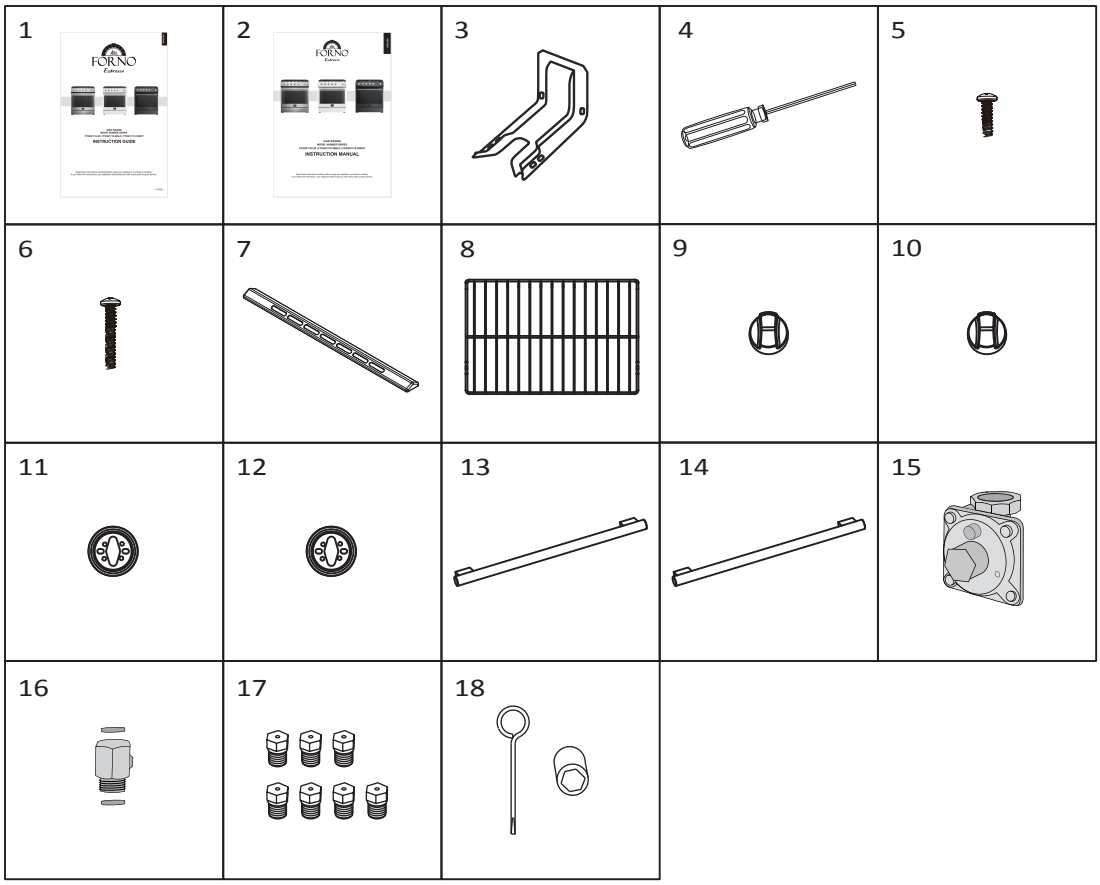

Note: Antique brass Handle/Antique brass Knobs only for the White And Black Units.

THE ANTI-TIP BRACKET

NOTE: An anti-tip bracket kit is provided with the range.

WARNING: Tip Over Hazard

- A child or adult can tip the range and be killed.
- Connect anti-tip bracket to rear range foot.
- Reconnect the anti-tip bracket if the range is moved.
- Failure to follow these instructions can result in death or serious burns to children and adults.

IMPORTANT: DO NOT completely remove the rear leveling leg. The anti-tip bracket uses either the right-hand or left hand, rear leveling leg to secure the range to the floor.

1: Locate the bracket

Determine the final location of the range before attempting to install the bracket.

A. Place the bracket on the floor with the back edge against the rear wall. If the range does not reach the rear wall, align the back edge of the bracket with the rear panel of the range in its final location.
NOTE: If bracket does not touch the rear wall, you MUST screw bracket to FLOOR .

B. Position the side of the bracket against either the left or right cabinet. If there is no adjacent cabinet, align the edge of the bracket with the side panel of the range in its final location. If the countertop overhangs the cabinet, offset the bracket from the cabinet by the amount of overhang.

C. Mark the location for the pair of holes to be used (see illustration below).
NOTE: For FLOOR installation use either Loc A or B. For REAR WALL installation use Loc C.

2: Secure the bracket

The bracket must be screwed to either the FLOOR or REAR WALL.

FLOOR Installation:

- Wood floor: Use the screws provided to secure the bracket using the pair of marked holes (either Loc A or B).
- Concrete floor: Using a concrete bit, drill a 5/32” pilot hole 2” deep into the concrete at the center of each of the marked holes (either Loc A or B). Use the screws provided to secure the bracket into the floor.

REAR WALL Installation:

Use the 2 screws provided to secure the bracket using the pair of marked holes at Loc C. The screws MUST enter a

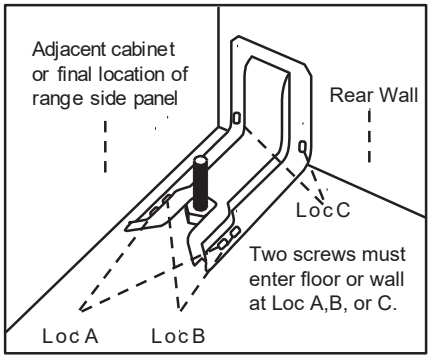

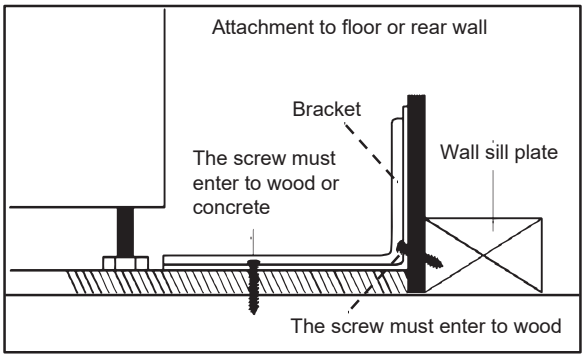

wood sill plate. If the wall contains any metal studs or similar materials, then the floor must be used.

3: Check The Bracket

After installing the bracket, slide the range into its final location. The rear leveling leg must be fully inserted into the ANTI-TIP bracket as shown in Step 1. To check if the bracket is installed and engaged properly, look underneath the range to see that the rear leveling leg is engaged in the bracket. On some models, the storage drawer or kick panel can be removed for easier inspection. If visual inspection is not possible, slide the range forward, confirm the anti-tip bracket is securely attached to the floor or wall, and slide the range back so the leveling leg is under the anti-tip bracket. If the range is pulled from the wall for any reason, always repeat this procedure to verify the range is properly secured by the anti-tip bracket.

NOTE: The anti-tip bracket must be PROPERLY INSTALLED, and the rear leveling leg must be FULLY ENGAGED into the bracket to prevent the range from tipping. NEVER remove the leveling legs. This will prevent the range from being secured to the ANTI-TIP bracket properly.

INSTALLING THE HANDLE

1. Locate the screw on the handle

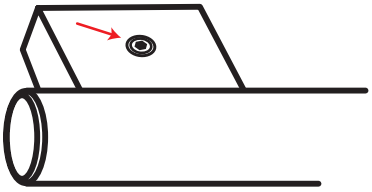

2. Remove the screw with the provided hexagon wrench. (Repeat again on the other sides)

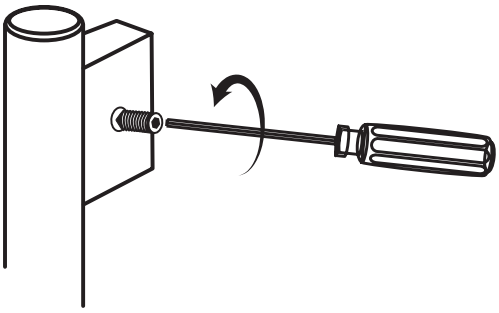

3. Fix the handle to the pin.

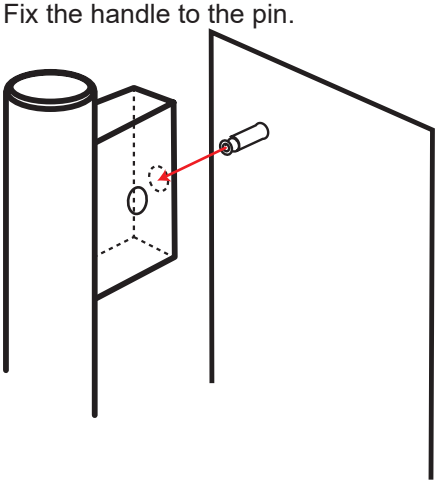

4. Then put back the screw and righten it with the hexagon wrench.(Repeat again on the other sides)

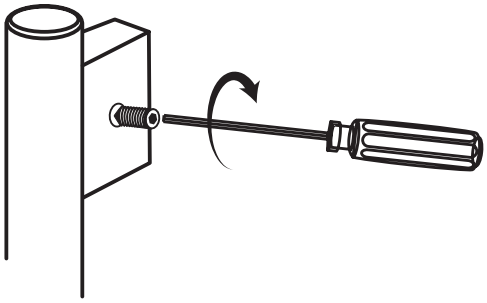

5. When you assemble the handles, make sure the screw is facing down to the floor.

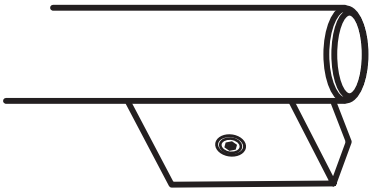

Control Panel

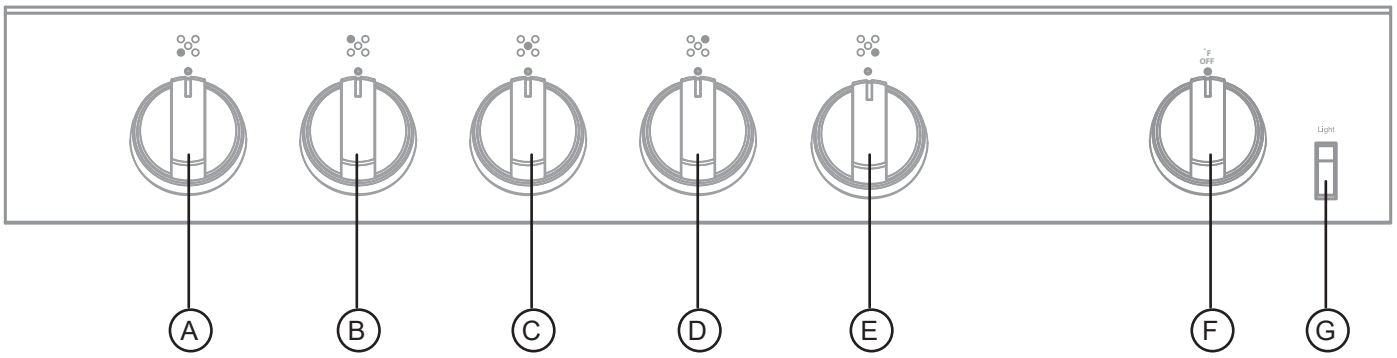

Numbers	Parts
A	Front, left burner
B	Rear, left burner
C	Center burner
D	Rear, right burner
E	Front right burner
F	Oven Knob
G	Light

Surface Burner Controls:
The five cooktop burners, push and turn to the ignite position and hold for several seconds till burners ignite successfully.

Oven Controls:
- Oven has two functions. Convection Bake and Broil.
- Convection Bake: Turn the knob to left to ignite the bottom burner and convection fan will begin to activate.

Broil: Turn the knob to right to ignite the upper burner.

Light
Press the rocker switch to turn on and off light.

Read the instructions before installing or using this appliance.

1. This appliance shall be installed in accordance with the regulations in force and only used in a well-ventilated space.

2. The use of a gas-cooking appliance results in the production of heat and moisture in the room in which it is installed. Ensure that the kitchen is well ventilated: keep natural ventilation holes open or install a mechanical ventilation device (mechanical extractor hood).

3. Prolonged intensive use of the appliance may call for additional ventilation, for example opening of a window, or more effective ventilation, for example increasing the level of mechanical ventilation where present.

IGNITION AND OPERATION OF THE BURNERS

To ignite a burner, push down on the burner knob and rotate it counterclockwise until the knob indicator is aligned with the ignite icon. Release the knob and adjust the flame intensity by further rotating the knob counterclockwise from MAX (maximum) to MIN (minimum).

NOTE: For models with a flame failure safety device - Once the flame is lit, hold the knob depressed for about 3-4 seconds until the device keeps the burner automatically lit. If the burner fails to ignite, wait one minute for the gas to dissipate before attempting to reignite. To turn off the burner, rotate the knob clockwise until the indicator on the knob is aligned with OFF.

POWER FAILURE
In case of prolonged power failure, the surface burners can be lit manually. Hold a lit match near a burner and turn knob counterclockwise until the indicator is aligned with MAX. After the burner is lit, turn knob to desired setting.
In the case of unintentional flame extinguishing, the safety valve intervenes by shutting off the gas to the burners.
The electric igniter must not be actuated for longer than 15 seconds. Should the burner not light, or should the burner be unintentionally turned off, immediately close the burner, and wait at least 1 minute before repeating. Once ignited, adjust the flame as desired.

For lower gas consumption and a better result, use saucepans with a diameter matching the diameter of the burner, to avoid the flame coming up around the sides of the saucepan. See the Container Table. Use only flat bottomed pans. As soon as liquid starts to boil, turn the flame down to a level sufficient to maintain boiling.

Operating Instruction

COOKWARE

- Match pan diameter to flame size. The flame should be the same size as the bottom of the pan or smaller. Do not use small pans with high flame settings as the flames can lick up the sides of the pan. Oversized pans that span two burners are placed front to rear, not side to side.
- Use balanced pans. Pans must sit level on the cooktop grate without rocking. Center the pan over the burner.
- Use a lid that fits properly. A well-fitting lid helps shorten the cooking time. Flat, heavy bottom pans provide even heat and stability.

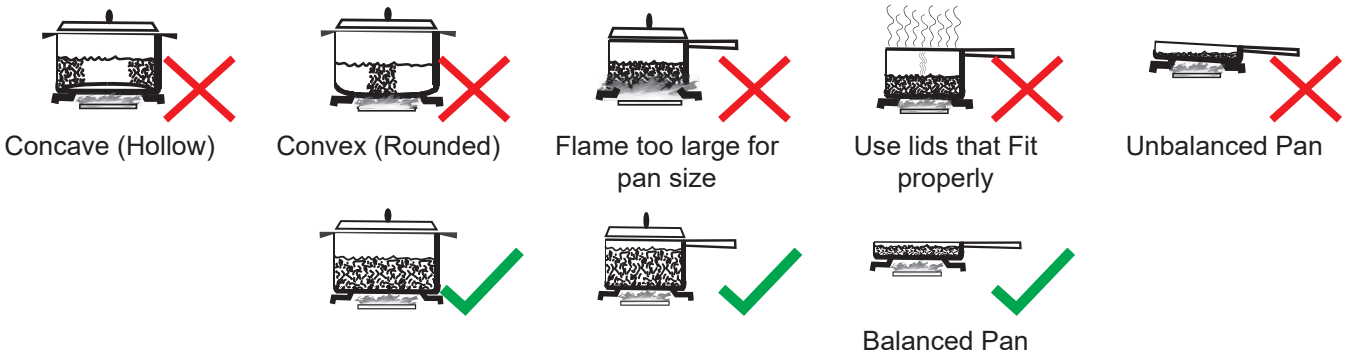

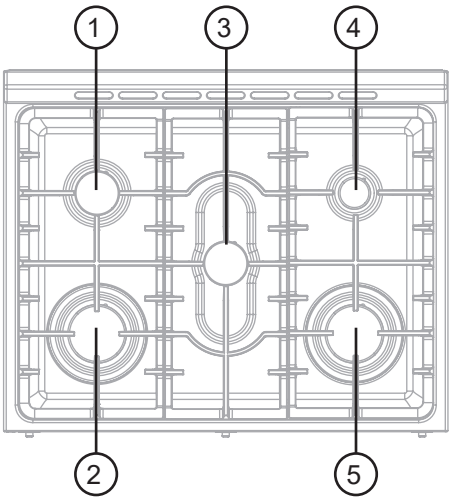

Burner #	Burner type	Min Saucepan	Max Saucepan
4	Auxiliary	3.5” (9.0 cm)	6.3” (16 cm)
3 & 4	Semi-rapid	5.1” (13 cm)	7.1” (18 cm)
2 & 3	Rapid	5.9” (15 cm)	10.2” (26 cm)

WARNING

NEVER cover any slots, holes or passages in the oven bottom or cover an entire rack with materials such as aluminum foil. Doing so blocks airflow through the oven and may cause carbon monoxide poisoning. Aluminum foil linings may also trap heat, causing a fire hazard.

Reset all controls to the OFF position after using a programmable timing operation. No attempt should be made to operate the appliance during power failure.

An air curtain or other overhead range hood, which operates by blowing a downward airflow onto a range shall not be used in conjunction with a gas range.

Operating Instruction

OVEN CONTROLS

The Thermostat knob and Cooking-mode knobs are used together to select oven Modes

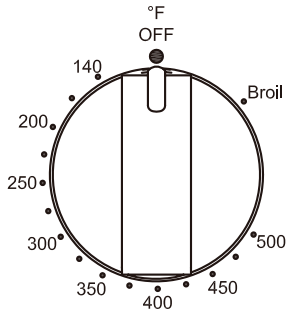

THERMOSTAT KNOB

Push in on the Thermostat knob, and then turn the knob to desired temperature or broil, and wait for around 20 seconds till the burner ignites successfully.

Conv Bake
THERMOSTAT RANGE: 140°F (60°C) TO MAX 500°F (260°C)

The Conv Bake mode uses heat from the lower burner and convection fan assisted to cook food. When using this mode to prepare baked goods such as cakes, cookies and pastries, always preheat the oven first and place food centrally near the middle racks.

Broil
THERMOSTAT RANGE: Broil

The Broil mode uses intense heat from the upper element to sear foods. Ideal for toasting, melting cheese, browning and searing surface. Food should be placed near the upper racks, and should not be cooked for too long on each side of the food. It is not necessary to preheat when using this mode.

TIPS AND TECHNIQUES

Follow the recipe or convenience food directions for baking temperature, time and rack position. Baking time will vary with the temperature of ingredients and the size, shape and finish of the baking utensil.

General Guidelines

• For best results, bake food on a single rack with at least 1” - 1½” (2.5 - 3 cm) space between utensils and oven walls.

• Use one rack when selecting the bake mode.

• Check for doneness at the minimum time.

• Use metal bake ware (with or without a non-stick finish), heatproof glass, glass-ceramic, pottery or other utensils suitable for the oven.

• When using heatproof glass, reduce temperature by 25°F (15°C) from recommended temperature.

• Use baking sheets with or without sides or jelly roll pans.

• Dark metal pans or nonstick coatings will cook faster with more browning.
Insulated bake ware will slightly lengthen the cooking time for most foods.

• Do not use aluminum foil or disposable aluminum trays to line any part of the oven. Foil is an excellent heat insulator and heat will be trapped beneath it. This will alter the cooking performance and can damage the finish of the oven.

• Avoid using the opened door as a shelf to place pans.

• See Troubleshooting for tips to Solving Baking and Roasting Problems.

Operating Instruction (continued)

BAKE CHART

Food Item	Rack Position	Temp. °F (°C) (Preheated Oven)	Time (Min)
Cake			
Cupcakes	2	350 (175)	19-22
Bundt Cake	1	350 (175)	40-45
Angel Food	1	350 (175)	35-39
Pie			
2 crust, fresh, 9”	2	375-400 (190-205)	45-50
2 crust, frozen fruit, 9”	2	375 (190)	68-78
Cookies			
Sugar	2	350-375 (175-190)	8-10
Chocolate Chip	2	350-375 (175-190)	8-13
Brownies	2	350 (175)	29-36
Breads			
Yeast bread loaf, 9x5	2	375 (190)	18-22
Yeast rolls	2	375-400 (190-205)	12-15
Biscuits	2	375-400 (190-205)	7-9
Muffins	2	425 (220)	15-19
Pizza			
Frozen	2	400-450 (205-235)	23-26
Fresh	2	475 (246)	15-18

Care and Maintenance

CLEANING

IMPORTANT: Before cleaning, make sure all controls are off and the oven and cooktop are cool. Always follow label instructions on cleaning products. Soap, water and a soft cloth or sponge are suggested first unless otherwise noted. Do not use abrasive cleaning products.

EXTERIOR PORCELAIN ENAMEL SURFACES
• Food spills containing acids, such as vinegar and tomato, should be cleaned as soon as the entire appliance is cool. These spills may affect the finish.

Cleaning Method:
• Glass cleaner, mild liquid cleaner or nonabrasive scrubbing pad: Gently clean around the model and serial number plate because scrubbing may remove numbers.

EXTERIOR STAINLESS STEEL
NOTE: Do not use soap-filled scouring pads, abrasive cleaners, Cooktop Polishing Cream, steel-wool pads, gritty washcloths or some paper towels. Damage may occur, even with one-time or limited use.

• Rub in direction of grain to avoid damaging.

Cleaning Methods:
• Liquid detergent or all-purpose cleaner: Rinse well with clean water and dry with soft, lint-free cloth.

• Stainless Steel Cleaner and Polish. Vinegar for hard water spots.

OVEN DOOR EXTERIOR
Cleaning Method:
• Glass cleaner and paper towels or nonabrasive plastic scrubbing pad: Apply glass cleaner to soft cloth or sponge, not directly on panel.

PORCELAIN-COATED GRATES AND CAPS
- Clean as soon as cooktop, grates and caps are cool.
- Food spills containing acids, such as vinegar and tomato, should be cleaned as soon as the cooktop grates and caps are cool. These spills may affect the finish.
- To avoid chipping, do not bang grates and caps against each other or hard surfaces such as cast iron cookware.

- Do not reassemble caps on burners while wet.

Cleaning Method:
- Nonabrasive plastic scrubbing pad and mildly abrasive cleanser.

BURNER SPREADER
- Wash the burner spreader frequently with boiling water and detergent to remove any deposits which could block the flame outlet.

- Before reinstalling, dry the burner spreader thoroughly so the burner will ignite properly.

COOKTOP CONTROL KNOBS
- Pull knobs straight away from control panel to remove.

- When replacing knobs, make sure knobs are in the Off position.

Cleaning Method:
- Soap and water or dishwasher.
  NOTE: Do not use steel wool, abrasive cleansers or oven cleaner. Do not soak knobs.

CONTROL PANEL
Cleaning Method:
- Glass cleaner and soft cloth or sponge: Apply glass cleaner to soft cloth or sponge, not directly on panel.
  NOTE: Do not use abrasive cleaners, steel-wool pads, gritty washcloths or some paper towels. Damage may occur.

OVEN CAVITY
- Food spills should be cleaned when oven cools. At high temperatures, foods react with porcelain, so staining, etching, pitting or faint white spots can result.

Cleaning Method:
- Mild detergent and warm water.
  NOTE: Do not use oven cleaners.

OVEN RACKS AND ROASTING RACKS
Cleaning Method:
- Steel-wool pad

2-PIECE BROILER PAN
Cleaning Method:
- Mildly abrasive cleanser: Scrub with wet scouring pad.

- Solution of ½ cup (125 mL) ammonia to 1 gal. (3.75 L) water: Soak for 20 minutes, and then scrub with scouring or steel-wool pad.

- Oven cleaner: Follow product label instructions. Porcelain enamel only, not chrome Dishwasher.

Troubleshooting

First try the solutions suggested here to possibly avoid the cost of a service call.

BAKING AND ROASTING PROBLEMS
Before contacting Forno customer service, please check the chart below for cases that may apply to you. It can be simple misuse of material, shapes, and sizes of bakeware that causes poor results.

Baking Issues	Causes
Food browns unevenly	• Oven not preheated • Aluminum foil on oven rack or oven bottom • Baking utensil too large for recipe • Pans touching each other or oven walls
Food too brown on bottom	• Oven not preheated • Using glass, dull or darkened metal pans • Incorrect rack position • Pans touching each other or oven walls
Food is dry or has shrunk excessively	• Oven temperature too high • Baking time too long • Oven door opened frequently • Pan size too large
Food is baking or roasting too slowly	• Oven temperature too low • Oven not preheated • Oven door opened frequently • Tightly sealed with aluminum foil • Pan size too small
Pie crusts do not brown on bottom or crust is soggy	• Baking time not long enough • Using shiny steel pans • Incorrect rack position • Oven temperature is too low
Cakes pale, flat and may not be done inside	• Oven temperature too low • Incorrect baking time • Cake tested too soon • Oven door opened too often • Pan size may be too large
Cakes high in middle with crack on top	• Oven temperature too high • Baking time too long • Pans touching each other or oven walls • Incorrect rack position • Pan size too small
Piecrust edges too brown	• Oven temperature too high • Edges of crust too thin

Cooktop Probkems

Problem	Possible Causes	Solutions
Burner will not ignite	There is no power to the range.	Check that range is properly connected to 3- or 4-wire, 240V power supply.
Burner will not operate	First time use. Air still in the gas line.	Turn on any one of the surface burner knobs to release air from the gas lines.
	Control knob is not set correctly.	Push in knob before turning to a setting.
	The burner port is clogged.	Clean burner port opening using a stiff, nylon toothbrush or a straightened paper clip.
Burner Flames are uneven, yellow and/ or noisy	Burner port(s) are clogged.	Clean burner port opening using a stiff, nylon toothbrush or a straightened paper clip.
	Burner caps are not positioned properly.	Place burner caps so that the alignment pins are properly aligned with the slots.
	Propane gas is being used.	The range should be converted to LP gas by a qualified technician.

Troubleshooting (continued)

Problem	Possible Causes	Solutions
Burner flame is too high or too low	Cooktop gas supply is not correct.	Ensure the range is set for the correct gas type. It is factory set for natural gas. If connecting to LP gas, the burners should be converted to LP gas with the orifice kit supplied and the pressure regulator converted to the LP gas setting by a qualified technician.
	The gas pressure is not correct.	Make sure the pressure regulator is installed correctly and the gas line pressure is correct. See Installation Instructions.
Burner makes popping noises	The burner is wet.	Allow the burner to dry before using.
	The burner cap or gas spreader is not positioned correctly.	Use cookware with a bottom surface approximately the same size as the cooking area and burner. Cookware should not extend more than 1” (2.5 cm) outside the cooking area. Adjust the flame so that it does not come up around the cookware.
Excessive heat around cookware on cooktop	The cookware is not the proper size for the burner.	Use cookware with a bottom surface approximately the same size as the cooking area and burner. Cookware should not extend more than 1” (2.5 cm) outside the cooking area. Adjust the flame so that it does not
Cooking results are not what expected	Using incorrect cookware.	See the “Cookware” section.
	The control knob is not set to the proper heat level.	See the “Cookware” section.
Oven is not heating	No power to the range.	Check the circuit breaker or fuse box to your house. Make sure there is proper electrical power to the oven.
	Oven control not turned on.	Make sure the oven temperature has been selected.
Oven is not cooking evenly	Not using the correct bake ware or oven rack position.	Refer to cook charts for recommended rack position. Always reduce recipe temperature by 25 °F (15 °C) when baking with Convention Bake mode.
Oven display stays Off	Power interruption.	Turn off power at the main power supply (fuse or breaker box). Turn breaker back on. If condition persists, call for service.
Cooling fan continues to run after oven is turned off	The electronic components have not yet cooled sufficiently.	The fan will turn off automatically when the electronic components have cooled sufficiently.
Oven light is not working properly	Light bulb loose or burned-out.	Reinsert or replace the light bulb. Touching the bulb with fingers may cause the bulb to burn out.
Oven light stays on	Door is not closing completely	Check for obstruction in oven door. Check to see if hinge is bent or door switch broken.
Cannot remove lens cover	Soil build-up around the lens cover.	Wipe lens cover area with a clean, dry towel prior to attempting to remove the lens cover.

Troubleshooting (continued)

Problem	Possible Causes	Solutions
Clock and timer are not working properly	No power to the range.	Check the circuit breaker or fuse box to your house. Make sure there is proper electrical power to the oven. Check the circuit breaker or fuse box to your house. Make sure there is proper electrical power to the oven.
Excessive Moisture		When using bake mode, preheat the oven first. Convection Bake and Convection Roast will eliminate any moisture in the oven.
Porcelain Chips	Porcelain interior is chipped by oven racks	When removing and replacing oven racks, always tilt racks upward and do not force them to avoid chipping the porcelain.

Warranty

What this limited warranty covers:
The Warranty coverage provided by Forno Appliances in this statement applies exclusively to the original Forno appliance (“Product”) sold to the consumer (“Purchaser”) by an authorized Forno dealer/distributor/retailer, purchased and installed in the United States or Canada, and which has always remained within the original country of purchase (the United States or Canada). Warranty coverage is activated on the date of the Product’s original retail purchase and has a duration of two (2) years.

Warranty coverage is non-transferable. In the event of replacement of parts or of the entire product, the replacement Product (or parts) shall assume the remaining original Warranty activated with the original retail purchase document. This Warranty shall not be extended with respect to such replacement. Forno Appliances will repair or replace any component/part which fails or proves defective due to materials and/or workmanship within 2 years of the date of the original retail purchase and under conditions of ordinary residential, non-commercial use. Repair or replacement will be free of charge, including labor at standard rates and shipping expenses. Purchaser is responsible for making the Product reasonably accessible for service. Repair service must be performed by a Forno Authorized Service company during normal working hours.

Important
Retain proof of original purchase to establish warranty period. Forno’s liability on any claim of any kind, with respect to the goods and/or services provided, shall in no event exceed the value of the goods or service or part there of which has given rise to the claim.

30-Day Cosmetic Warranty
The Purchaser must inspect the product at the time of delivery. Forno warrants that the Product is free from manufacturing defects in materials and workmanship for a period of thirty (30) days from date of the original retail purchase of the Product.

This coverage includes:
- Paint blemishes
- Chips
- Macroscopic finish defects

Cosmetic warranty does NOT cover:
- Issues resulting from incorrect transport, handling and/ or installation (e.g.: dents, broken, warped or deformed structures or components, cracked or otherwise damaged glass components);
- Slight color variations on painted/enameled components;
- Differences caused by natural or artificial lighting, location or other analogous factors; > stains/corrosion/ discoloration caused by external substances and/ or environmental factors; > labor costs, display, floor, B-stock, out- of-box,“as is” appliances and demo units.

How to receive service
To receive warranty services, the Purchaser must contact the Forno Support department in order to determine the problem and the required service procedures. Troubleshooting with a customer service representative will be necessary before moving forward with the service. Model number, serial number and date of original retail purchase will be requested.

Warranty Exclusions: What Is Not Covered.
- Use of the Product in any non-residential, commercial application.
- Use of the Product for anything other than its intended purpose.
- Repair services provided by anyone other than a Forno Authorized Service agency.
- Damages or repair services to correct services provided by unauthorized parties or the use of unauthorized parts.
- Installation not in accordance with local/state/city/county fire codes, electrical codes, gas codes, plumbing codes, building codes, laws or regulations.
- Defects or damage due to improper storage of the Product.
- Defects, damage or missing parts on products sold out of the original factory packaging or from displays. > Service calls or repairs to correct an incorrect installation of the Product and/or related accessories.
- Replacement of parts/service calls to connect, convert or otherwise repair the electrical wiring and/or gas line in order to properly use the product.
- Replacement of parts/service calls to provide instructions and information on the use of the Product.
- Replacement of parts/service calls to correct issues arising from the product being used in a manner other than what is normal and customary for residential use.
- Replacement of parts/service calls due to wear and tear of components such as seals, knobs, pan supports, shelving, cutlery baskets, buttons, touch displays, scratched or broken ceramic-glass tops.
- Replacement of parts/service calls for lack of/improper maintenance, including but not limited to: build up of residues, stains, scratches, discoloration, corrosion.
- Defects and damages arising from accidents, alteration, misuse, abuse or improper installation.
- Defects and damages arising from Product transport, logistics and handling. Inspection of the product must be made at time of delivery. Following receipt and inspection, the selling dealer/delivery company must be notified of any issues arising from handling, transport and logistics.
- Defects and damages arising from external forces beyond the control of Forno Appliances, including but not limited to wind, rain, sand, fires, floods, mudslides, freezing temperatures, excessive moisture or extended exposure to humidity, power surges,
- Lightning, structural failures surrounding the appliance and other acts of God.
- Products whose serial number has been altered/ damaged/tampered with. In no case shall Forno be held liable or responsible for damage to surrounding property, including furniture, cabinetry, flooring, panels, and other structures surrounding the Product. Forno is neither liable nor responsible for the Product if it is located in a remote area or an area where certified trained technicians are not reasonably available. Purchaser must bear any transportation and delivery costs of the Product to the nearest Authorized Service Center or the additional travel expenses of a certified trained technician

Warranty (continued)

THERE ARE NO EXPRESS WARRANTIES OTHER THAN THOSE LISTED AND DESCRIBED ABOVE, AND NO WARRANTIES, EITHER EXPRESS OR IMPLIED, INCLUDING, BUT NOT LIMITED TO, ANY IMPLIED WARRANTIES OF MERCHANTABILITY OR FITNESS FOR A PARTICULAR PURPOSE THAT SHALL APPLY AFTER THE EXPRESS WARRANTY PERIODS STATED ABOVE, AND NO OTHER EXPRESS WARRANTY OR GUARANTEE GIVEN BY ANY PERSON, FIRM OR CORPORATION WITH RESPECT TO THIS PRODUCT SHALL BE BINDING ON FORNO. FORNO SHALL NOT BE LIABLE FOR LOSS OF REVENUE OR PROFITS, FAILURE TO REALIZE SAVINGS OR OTHER BENEFITS, TIME AWAY FROM WORK, MEALS, LOSS OF FOOD OR BEVERAGES, TRAVELING OR HOTEL EXPENSES, EXPENSES TO RENT OR PURCHASE APPLIANCES, REMODELING/CONSTRUCTION EXPENSES IN EXCESS OF DIRECT DAMAGES WHICH ARE UNDENIABLY CAUSED EXCLUSIVELY BY FORNO OR ANY OTHER SPECIAL, INCIDENTAL OR CONSEQUENTIAL DAMAGES CAUSED BY THE USE, MISUSE OR INABILITY TO USE THIS PRODUCT, REGARDLESS OF THE LEGAL THEORY ON WHICH THE CLAIM IS BASED, AND EVEN IF FORNO HAS BEEN ADVISED OF THE POSSIBILITY OF SUCH DAMAGES. NOR SHALL RECOVERY OF ANY KIND AGAINST FORNO BE GREATER IN AMOUNT THAN THE PURCHASE PRICE OF THE PRODUCT SOLD BY FORNO AND CAUSING THE ALLEGED DAMAGE. WITHOUT PREJUDICE TO THE FOREGOING, PURCHASER ASSUMES ALL RISK AND LIABILITY FOR LOSS, DAMAGE OR INJURY TO PURCHASER AND PURCHASER'S PROPERTY AND TO OTHERS AND THEIR PROPERTY ARISING FROM THE USE, MISUSE, OR INABILITY TO USE THIS PRODUCT SOLD BY FORNO THAT IS NOT A DIRECT RESULT OF NEGLIGENCE ON THE PART OF FORNO THIS LIMITED WARRANTY SHALL NOT EXTEND TO ANYONE OTHER THAN THE ORIGINAL PURCHASER OF THIS PRODUCT, IS NON-TRANSFERABLE, AND STATES YOUR EXCLUSIVE REMEDY.

Correct Disposal of this product:
This marking indicates that this appliance should not be disposed with other household wastes. To prevent possible harm to the environment or human health from uncontrolled waste disposal, recycle it responsibly to promote the sustainable reuse of material resources.

FORNO

Espresso