# ZLINE

ATTAINABLE **LUXURY**®

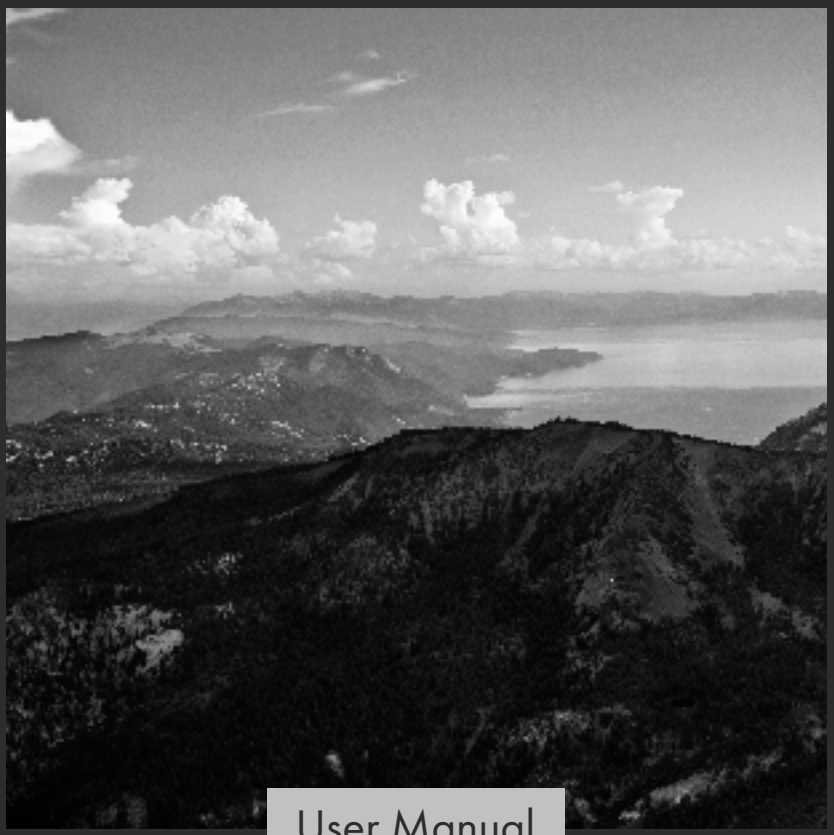

User Manual

# GAS RANGES
# CGR, HGR, & SGR MODELS

www.zlinekitchen.com

ZLINE Kitchen and Bath provides Attainable Luxury, where the kitchen and bath of your dreams is never out of reach. Through our unique designs and unparalleled quality, we're dedicated to providing you an elevated experience in the heart of your home. With an endless selection of features and finishes, our inspiration is your reality.

ZLINE
ATTAINABLE **LUXURY**®

ZLINE is fueled by a passion for innovation; A relentless pursuit of bringing the highest end luxury designs and professional features into everyone's homes.

Because we continually strive to improve our products, we may change specifications and designs without prior notice.

**Scan the QR code to view the most up-to-date version of the Installation Manual and User Manual.**

⚠ WARNING: This product can expose you to chemicals including nickel, which is known to the State of California to cause cancer. For more information, go to www.P65Warnings.ca.gov.

# TABLE OF CONTENTS

IMPORTANT SAFETY INSTRUCTIONS . . . . . 1

Gas Safety . . . . . 1

Electric and Gas Safety . . . . . 6

Cooktop Safety . . . . . 9

Tipping Safety . . . . . 11

Ventilation Safety . . . . . 13

Surface Burner Safety . . . . . 16

Cooking Safety . . . . . 17

OPERATION . . . . . 18

Surface Burner Operation . . . . . 20

Oven Operation . . . . . 24

CARE AND MAINTENANCE . . . . . 30

Removing the Oven Door and Kick Plate . . . . . 30

Replacing the Oven Lights . . . . . 32

Cleaning Your Range . . . . . 32

TROUBLESHOOTING . . . . . 35

WARRANTY . . . . . 38

# IMPORTANT SAFETY INSTRUCTIONS

## GAS SAFETY

WARNING

WARNING: If the information in these instructions is not followed exactly, a fire or explosion may result causing property damage, personal injury or death.

- Do not store or use gasoline or other flammable vapors and liquids in the vicinity of this or any other appliance.
- WHAT TO DO IF YOU SMELL GAS
  - Do not try to light any appliance.
  - Do not touch any electrical switch.
  - Do not use any phone in your building.
  - Immediately call your gas supplier from a neighbor's phone. Follow the gas supplier's instructions.
  - If you cannot reach your gas supplier, call the fire department.
- Installation and service must be performed by a qualified installer, service agency or the gas supplier.

# IMPORTANT SAFETY INSTRUCTIONS

AVERTISSEMENT : Le non-respect à la lettre de ces instructions peut causer un incendie ou une explosion, qui pourrait entraîner des dommages matériels, desblessures ou la mort

- Ne pas entreposer ou utiliser d'essence ou tout autre liquide ou gaz inflammable à proximité de cet appareil ou de tout autre appareil.
- EN PRÉSENCE D'UNE ODEUR DE GAZ :
  - Ne tenter d'allumer aucun appareil ;
  - Ne toucher à aucun commutateur électrique ;
  - N'utiliser aucun téléphone dans l'immeuble ;
  - Appeler immédiatement le fournisseur de gaz à partir d'un téléphone situé à l'extérieur de l'immeuble ; Suivre les instructions du fournisseur de gaz ;
  - S'il est impossible de joindre le fournisseur de gaz, appeler le service des incendies.
- L'installation et la réparation doivent être effectuées par un installateur ou une agence de réparation ayant les qualifications requises ou par le fournisseur de gaz.

# IMPORTANT SAFETY INSTRUCTIONS

WARNING

WARNING:

Never Operate the Top Surface Cooking Section of this Appliance Unattended.

- Failure to follow this warning statement could result in fire, explosion, or burn hazard that could cause property damage, personal injury, or death.
- If a fire should occur, keep away from the appliance and immediately call your fire department. DO NOT ATTEMPT TO EXTINGUISH AN OIL/GREASE FIRE WITH WATER.

ATTENTION

ATTENTION :

Ne faites jamais fonctionner la surface de cuisson, sur le dessus de cet appareil, sans surveillance.

- Le non-respect de cette mise en garde pourrait entraîner un incendie, une explosion ou un risque de brûlure et ainsi causer des dommages matériels, des blessures ou la mort.
- Si l'appareil prend feu, tenez-vous à l'écart et appelez immédiatement votre service des incendies. NE TENTEZ JAMAIS D'ÉTEINDRE UN FEU DE GRAISSE OU D'HUILE EN L'ASPERGEANT D'EAU.

# IMPORTANT SAFETY INSTRUCTIONS

WARNING

WARNING: Never use this appliance as a space heater to heat or warm the room. Doing so may result in carbon monoxide poisoning and overheating. Never use the top of the range or the interior of the oven as a storage areas, as items could melt or ignite, increasing the risk of fire, damage, and/or serious injury.

AVERTISSEMENT

AVERTISSEMENT: Ne JAMAIS utiliser cet appareil électroménager en guise de chaufferette. Le fait de chauffer une pièce ainsi peut entraîner un empoisonnement au monoxyde de carbone ou une surchauffe du four.

WARNING

WARNING: NEVER cover any slots, holes or passages in the oven bottom or cover an entire rack with materials such as aluminum foil. Doing so blocks airflow through the oven and may cause carbon monoxide poisoning. Aluminum foil linings may also trap heat, causing a fire hazard.

AVERTISSEMENT

AVERTISSEMENT: Ne JAMAIS recouvrir une fente, un trou ou une conduite dans le fond du four ni recouvrir entièrement une grille d'un matériau comme du papier d'aluminium. Un tel revêtement bloque la circulation d'air dans le four, ce qui peut entraîner un empoisonnement au monoxyde de carbone. De plus, le papier d'aluminium peut emprisonner la chaleur, ce qui risque de provoquer un incendie.

# IMPORTANT SAFETY INSTRUCTIONS

- Before beginning installation, please read and follow these important instructions for the safety of your home and the people living in it.
- The manufacturer will not be responsible for any damage to property or to persons caused by incorrect installation, improper use of the appliance, or failure to heed the warnings listed.
- The manufacturer reserves the right to make changes to its products when considered necessary and useful, without affecting the essential safety and operating characteristics.
- This appliance has been designed for non-commercial, domestic use only.
- Please observe all local, state, and national codes and ordinances. Please ensure the range is properly grounded. The plug should always be accessible.
- The installer should leave these instructions with the consumer who should retain for local inspectors' use and for future reference.
- This manual does not cover all possible conditions that may occur during installation and/or operation. Always contact a qualified service technician or the manufacturer about problems you may not understand.

WARNING **Installation and service on this product must only be conducted by a qualified installer, service agency, or gas supplier.**

- The installation of appliance designed for manufactured (mobile) home installation must conform with the Manufactured Home Construction and Safety Standard, Title 24CFR, Part 3280 [formerly the Federal Standard for Mobile Home Construction and Safety, Title 24, HUD (Part280)] or with local codes where applicable.
- Installation of any gas-fired equipment should be made by a licensed plumber or gas fitter. A manual gas shut-off valve must be installed in the gas supply line for safety and ease of service.
- Please ensure that the altitude of your home is conducive for the use of gas cooking products. If the product is installed at higher altitudes above sea level, you may experience issues with gas pressure that will affect product performance. Please consult your local gas company for recommendations before purchasing or installing.

# IMPORTANT SAFETY INSTRUCTIONS

## IMPORTANT SAFETY ALERTS

DANGER

**DANGER**: When you see this symbol in the instructions, it indicates a hazardous situation which, if not avoided, could result in death or serious injury.

WARNING

**WARNING**: When you see this symbol in the instructions, it indicates a hazardous situation which, if not avoided, could result in minor or moderate injury.

DANGER

### USE CARE WHEN UNPACKING THE PRODUCT

- Remove all tape and packaging before using the appliance, including plastic zip ties securing the oven racks.
- Carefully dispose of the product's shipping box, plastic bags, and all other packing materials after the appliance is unpacked.
- Boxes covered with rugs, bedspreads, sheets, or other materials can become air-tight chambers. Never allow children to play with packaging material.
- Remove all staples from the box. Staples can cause cuts and destroy finishes if they come in contact with other appliances or furniture.
- Do not remove the model/serial plate attached to the appliance; doing so will not only void the product warranty, it will limit the ability for future service to be conducted on the range in an effective manner.

WARNING

### ELECTRIC AND GAS SAFETY

- Be sure your appliance is properly installed and grounded by a qualified technician in accordance with all local codes and ordinances and with the National Fuel Gas Code ANSI Z223.1—latest edition and the National Electrical Code ANSI/NFPA No. 70—latest edition in United States, or CAN/CGA B149.1, B149.2, and the Canadian Electrical Code, Part 1, in Canada.
- Gas leaks cannot always be detected by smell. As such, gas suppliers recommend that you use a gas detector approved by UL or CSA. For more information, contact your gas supplier.
- If a gas leak is detected, refer to the "WHAT TO DO IF YOU SMELL GAS" alert on page 1.

# IMPORTANT SAFETY INSTRUCTIONS

- Installation and service on this product must be performed by a qualified installer, servicer, or gas supplier. Ask the manufacturer to recommend a qualified technician and authorized repair service in your area.
- Know how to shut off gas supply at the meter and disconnect the electrical power to the appliance at the circuit breaker or fuse box in case of an emergency. Installers should also show appliance owners the location of the appliance gas shut-off valve and how to shut it off if necessary.
- Do not repair or replace any part of the appliance unless specifically recommended in this manual. All other servicing should be done only by a qualified technician. This may reduce the risk of personal injury and damage to the appliance.

DANGER

**Always disconnect gas and power when servicing this product, especially for larger-scale repairs impacting important appliance functionality; failure to do so increases the risk of fire, explosion, injury, or death.**

## INSTALLATION SAFETY

- Never modify or alter the construction of the appliance by removing panels, wire covers, or any other part of the product.
- Injuries may result from the misuse of appliance doors such as stepping, leaning, or sitting on the doors.
- If the appliance is located near a window, NEVER hang long curtains or paper blinds on that window. They could blow over the surface burners and ignite, potentially causing a fire hazard.
- Ensure the kitchen or room where the appliance is installed is well ventilated by keeping the air intakes open and in good working order and/or by installing a range hood above the unit. It's recommended a hood is installed between 30" and 36" (762 and 914 mm) above the cooktop to allow for optimal air flow.

WARNING

**An air curtain or other overhead range/range top hood, which operates by blowing downward airflow onto the range, shall not be used/installed in conjunction with this gas range.**

# IMPORTANT SAFETY INSTRUCTIONS

- If the appliance is used intensively for a long time, the effectiveness of the ventilation will have to be increased, for example by opening a window or increasing the power of the range hood operating above.
- Flammable materials and liquids should not be stored on the appliance or near surface units. This includes paper, plastic, and cloth items, as well as cookbooks, plastic ware, and towels. Do not store explosives such as aerosol cans on or near the appliance. Flammable materials may explode and result in fire or property damage.
- Keep the appliance area clear and free from combustible materials, gasoline, and other flammable vapors and liquids.
- Flammable materials should not be stored in the oven or near surface units.

## IN THE STATE OF MASSACHUSETTS, THE FOLLOWING INSTALLATION INSTRUCTIONS APPLY

- Installations and repairs must be performed by a qualified or licensed contractor, plumber, or gas fitter licensed by the State of Massachusetts.
- If using a ball valve, it must be a T-handle type.
- A flexible gas connector, when used, must not exceed 3' (914 mm).

WARNING

## STATE OF CALIFORNIA PROPOSITION 65 WARNINGS

- The California Safe Drinking Water and Toxic Enforcement Act requires the Governor of California to publish a list of substances known to the state to cause birth defects or other reproductive harm and requires businesses to warn customers of potential exposure to such substances.
- Gas appliances can cause minor exposure to at least four main substances — benzene, carbon monoxide, formaldehyde, and soot — caused primarily by the incomplete combustion of natural gas or liquid propane fuels.
- Properly adjusted burners, indicated by a bluish rather than yellow flame, will minimize incomplete combustion. Exposure to these substances can also be minimized by venting with an open window or by using a ventilation fan or range hood.

# IMPORTANT SAFETY INSTRUCTIONS

DANGER

## COOKTOP SAFETY

- Do not store items of interest to children in the cabinets above the appliance or on the back splash of appliance.
- Children should not be left alone or unattended in the area where the appliance is in use. Do not allow children to climb, play, sit, or stand on or around any part of the appliance. Children climbing on the appliance to reach items could be seriously burned or injured.
- DO NOT TOUCH THE COOKING SURFACE, BURNERS, GRATES, OR ANY AREAS NEAR THEM. Surface burners or other parts of the range may be hot even though flames are not visible.
- Areas near surface burners or throughout the appliance may become hot enough to cause burns. During and after use, do not touch, or let clothing or other flammable materials touch, these areas until they have had sufficient time to cool.
- Do not wear loose-fitting or hanging garments while using the appliance. Do not let clothing or other flammable materials contact hot surfaces.
- Smother grease fires with a pan lid, or use baking soda, a dry chemical, or foam-type extinguisher. Use an extinguisher ONLY if:
  - You have a Class A, B, or C extinguisher and you know how to operate it.
  - The fire is small and contained in the area where it is started.
  - The fire department is being/has been called.
  - You can fight the fire with your back to an exit.
- When heating fat or grease, watch it closely. Fat or grease may catch fire if allowed to become too hot.
- Use only dry potholders and oven mitts. Moist or damp potholders on hot surfaces may result in burns from steam. Do not let potholders touch hot heating elements, flames, or burners. Do not use a towel or other bulky cloth instead of a potholder.
- Do not heat unopened food containers. Buildup of pressure may cause the container to burst and result in injury.
- Stepping, leaning, or sitting on this appliance can result in serious injuries and also damage the appliance.
- Know which knob controls which surface burner. Visually check that the burner has lit. Then adjust the flame so it does not extend beyond the edge of the pot/pan.
- Clean the appliance regularly to keep all parts free of grease that could catch fire. Exhaust fan ventilation range hoods and grease filters should be kept clean. Do not allow grease to accumulate on hoods or filters. Greasy deposits in the fan could catch fire.
- When cooking food, turn the hood fan on. Refer to hood manufacturer's instructions for cleaning and operation.

# IMPORTANT SAFETY INSTRUCTIONS

- Pot/pan handles should be turned inward and not extend over surface burners. To reduce the risk of burns, ignition of flammable materials, and spillage due to unintentional contact with the pot/pan, the handle of the utensil should be positioned so that it is turned inward, and does not extend over adjacent surface burners.
- Do not use aluminum foil to line any part of the appliance. Use aluminum foil only to cover food during cooking. Improper use of these liners may result in risk of electric shock or fire. Use of aluminum foil on any part of the range may void the manufacturer's warranty.
- Only certain types of glass, glass/ceramic, ceramic, earthenware, or other glazed cookware are suitable for use without breaking due to sudden changes in temperature. Check the manufacturer's recommendations for appliance use.

WARNING **Never leave surface burners unattended. Boilovers cause smoke and greasy spillovers that may ignite, or a pan that has boiled dry may melt.**

- Do not use decorative surface burner covers. If a burner is accidentally turned on, the decorative cover will become hot and possibly melt. You will not be able to see that the burner is on. Burns will occur if the hot covers are touched. Damage may also be done to the appliance or burners because the covers may cause overheating. Air will be blocked from the burner and cause combustion problems.
- Always use a proper flame size. Adjust the flame size so it does not extend beyond the edge of the pot/pan. The use of undersized pots/pans will expose a portion of the burner flame to direct contact and may result in ignition of clothing. Adjusting the flame size to appropriate levels will also improve efficiency.
- Always use proper pot/pan and cookware sizes. This appliance is equipped with surface units of different sizes. Select cookware with flat bottoms large enough to cover the surface unit.
- CGR48/HGR48/SGR48 series ranges come with a reversible cast iron griddle that can be placed vertically (front to back) atop any of the four grates on the range. Use care when placing and flipping the griddle to not damage the griddle or cast iron grates below.
- Make sure the griddle is completely cool to the touch before placing on or removing from the range to avoid risk of burns and injury.
- Do not use stove top grills on your gas appliance. If you use a stove top grill on a sealed gas burner, it will cause incomplete combustion and can result in exposure to carbon monoxide levels above allowable current standards. This can be hazardous to your health.

# IMPORTANT SAFETY INSTRUCTIONS

TIPPING SAFETY

- TIPPING RANGES CAN CAUSE SERIOUS PERSONAL INJURY OR DEATH.
- TO REDUCE THE RISK OF TIPPING OF THE RANGE, THE RANGE MUST BE SECURED WITH A PROPERLY INSTALLED ANTI-TIP DEVICE.
- FAILURE TO PROPERLY INSTALL THE ANTI-TIP DEVICE INTO THE WALL COULD RESULT IN THE DEATH OF A CHILD OR ADULT.

| ENGLISH | FRANÇAIS |
|---|---|
| Install the anti-tip device to the structure and/or the range. Verify the anti-tip device has been properly installed and engaged by sliding the range back toward the wall where both brackets have been secured, as outlined in the directions on "Installing The Anti-Tip Device" in the Installation Manual. | Installez le dispositif anti-basculement sur la structure et/ou la cuisinière. Vérifiez que le dispositif anti-basculement a été correctement installé et engagé en faisant glisser la cuisinière vers le mur où les deux supports ont été fixés, comme indiqué dans les instructions de la section « Installation du dispositif anti-basculement » dans le manuel d'installation. |
| Engage the range to the anti-tip device by safely tilting the front of the range upward slightly and moving it back to its final resting place, making sure the mounting pins slide under both brackets. | Engagez la cuisinière dans le dispositif anti-basculement en inclinant légèrement l'avant de la cuisinière vers le haut et en la ramenant à son emplacement de repos final, en vous assurant que les broches de montage glissent sous les deux supports. |
| Re-engage the anti-tip device if the range is moved. Do not operate the range without the anti-tip device in place and engaged. | Engager de nouveau le dispositif antibasculement si la cuisinière est déplacée. Ne pas utiliser la cuisinière lorsque le dispositif antibasculement n'est pas installé et engagé. |
| See installation instructions for details. | Voir les directives d'installation pour obtenir de plus amples renseignements |
| Failure to do so can result in death or serious burns to children or adults. | Toute omission de le faire expose les enfants et les adultes à un risque de décès ou de brûlures graves. |

# IMPORTANT SAFETY INSTRUCTIONS

- Ensure the anti-tip device is re-engaged when the range is moved by following the same steps outlined above and in the Installation Manual.
- Carefully pull on the range from the rear. If the brackets are installed correctly, the range will not tip more than 4" (102 mm) from the wall. If it tips forward more than 4" (102 mm), the anti-tip device has not been installed correctly.

**DANGER** DO NOT TIP THE RANGE MORE THAN 4" (102 MM) FROM THE WALL AS IT COULD TIP OVER AND CAUSE INJURY.

- Never completely remove the leveling legs or the range may not be secured to the anti-tip device properly. NEVER step or sit on the door.
- The range will not tip during normal use. However, without a properly fastened anti-tip bracket, the range can tip if too much force or weight is applied to the open door.

# IMPORTANT SAFETY INSTRUCTIONS

WARNING

## VENTILATION SAFETY

- The appliance should have proper ventilation in order to keep the unit operating properly and maintain the temperature of immediate surroundings. Do not obstruct flow of combustion and ventilation air.
- Observe all governing codes and ordinances, and check your local building codes as they may vary from the general rules outlined in this manual.
- It is the installer's responsibility to comply with installation clearances specified on the model/serial rating plate, in addition to within this User Manual.
- For proper operation of a gas appliance, the air necessary for gas combustion must be able to flow into the room naturally. The air must flow into the room directly through openings in the outside walls.
- These openings must be constructed so that it will not be obstructed from inside or outside, and not be constructed close to the floor. The opening is recommended to be on the side opposite to that on which the flue gases are discharged.
- The appliance should be located for convenient use in the kitchen; recessed installations must provide complete enclosure of the sides and rear of the range.
- To eliminate risk of burns or fire by reaching overheated surface units, cabinet storage space located above the range should be avoided. This risk can be further reduced by installing a range hood or microwave hood combination that projects horizontally a minimum of 5" (127 mm) beyond the bottom of the cabinets.
- If a ventilation range hood is installed with appropriate ducting, maintain a 30" (762 mm) minimum clearance between the cooking surface and bottom of the hood.
- Avoid placing cabinetry directly above the appliance when possible. If cabinetry is used above the cooking surface, use cabinets no more than 13" (330 mm) deep.
- Contact a service technician and/or a qualified floor covering installer to check that wall coverings, countertops, and cabinets located around the appliance can withstand at least 200 °F (93 °C).

# IMPORTANT SAFETY INSTRUCTIONS

## STORAGE AND FIRE SAFETY

- Items of interest to children should not be placed in cabinets above the appliance or on the steel back splash vent at the back the range. Children climbing on the appliance to reach items could be seriously injured.
- DO NOT leave children alone or unattended when the appliance is hot or in operation, even if the burners and oven have been off for several minutes. The unit's door, knobs, and cooktop may still have residual heat, and children could be seriously burned.
- DO NOT let anyone climb, stand, or hang on the unit. They could damage the range or cause it to tip over which could result in severe personal injury.

DANGER

**Never use this appliance as a space heater to heat or warm the room. Doing so may result in carbon monoxide poisoning and overheating.**

- NEVER wear loose fitting or hanging garments while using the range. Be careful when reaching for items placed in cabinets over the appliance. Flammable material could be ignited if it contacts flames or hot oven surfaces and may cause severe burns.
- DO NOT place flammable materials in the oven or anywhere near the range.
- DO NOT place or use combustible materials such as gasoline or other flammable vapors and liquids in the vicinity of this or any other appliance.
- DO NOT store cooking grease or other flammable materials in or near the appliance.

DANGER

**Never leave burners unattended at high heat settings. Boilovers cause smoke and greasy spillovers that may ignite, or a pan that has boiled dry may melt. DO NOT ATTEMPT TO EXTINGUISH AN OIL/GREASE FIRE WITH WATER.**

- If a grease fire occurs, never touch a flaming pan. Immediately turn the controls off. Smother a flaming pan on a surface burner by covering the pan completely with a well-fitting lid, cookie sheet or flat tray.
- A grease fire can also be put out by covering it with baking soda or, if available, by using a multi-purpose dry chemical or foam-type fire extinguisher.
- Flames inside the oven can be smothered completely by closing the oven door and turning controls to OFF, or by using a fire extinguisher.
- Allow the burner grates and other surfaces to completely cool before touching them.

# IMPORTANT SAFETY INSTRUCTIONS

- NEVER block the vents (air holes) of the appliance. They provide the air inlet and outlet that are necessary for the appliance to operate properly with correct combustion.
- Gas leak testing of the appliance must be conducted according to the manufacturer's instructions; always consult a qualified technician.
- Make sure your appliance is properly installed and grounded by a qualified installer, according to instructions explained in the Installation Manual. Any adjustment and service should be performed only by qualified gas range installers or service technicians.
- To prevent poor air circulation, place the appliance out of kitchen traffic path and out of drafty locations.

DANGER

**Stepping, leaning, or sitting on this range can result in injuries and damage to the appliance. DO NOT allow children to climb or play around the range; doing so may cause the appliance to tip, resulting in serious burns or other injury.**

- DO NOT attempt to repair or replace any part of your appliance unless it is specifically mentioned in this manual. All other service should be referred to a qualified technician.
- Make sure all packaging materials are removed — including the plastic zip ties securing the oven racks during shipping — from the appliance before operating it to prevent fire or smoke damage should the packaging material ignite.
- When cooking, adjust the burner controls so the flame heats only the bottom of the pot, pan, or cookware and does not overlap at the sides.
- Cookware, pots, and pans that conduct heat slowly, i.e. glass pots, should be used in conjunction with burner flames at a low or medium setting.
- Use the appliance only for cooking tasks as outlined in this manual. When using the appliance, do not touch the grates, burner caps, burner bases, or any other parts in proximity to the flame. These components may be hot enough to cause burns.
- During and after use, do not touch interior surfaces of the oven until cool.
- Do not use aluminum foil to line any part of the appliance. Use aluminum foil only to cover food during cooking. Improper use of these liners may result in risk of electric shock or fire. Use of aluminum foil on any part of the range may void the manufacturer's warranty.

# IMPORTANT SAFETY INSTRUCTIONS

WARNING

## SURFACE BURNER SAFETY

- If a cooktop burner flame goes out, gas will continue to flow to the burner until the knob is turned to the OFF position.
- NEVER leave the surface burners unattended, especially at high flame settings.
- DO NOT use pots/pans that are unstable or easily tipped. Select cookware with flat bottoms that are large enough to cover burner grates. To avoid spillovers, make sure cookware is large enough to contain the food properly. This will save cleaning time and prevent hazardous accumulations of food that could ignite.
- Pot/pan handles should be turned inward and not extend over adjacent surface burners. To reduce the risk of burns, ignition of flammable materials, and spillage, handles of pots and pans should be positioned so that they are turned inward and do not extend over adjacent surface burners.
- Always turn burner knobs to the HI position when igniting the top burners and make sure the burners have ignited before adjusting flame sizes.
- Use only dry pot holders or oven mitts—moist or damp pot holders on hot surfaces may result in burns from steam. DO NOT let pot holders come near open flames when lifting cookware. DO NOT use a towel or other bulky cloth instead of a pot holder.
- Do not use decorative surface burner covers. If a burner is accidentally turned on, the decorative cover will become hot and possibly melt. You will not be able to see that the burner is on. Burns will occur if the hot covers are touched.
- Do not use stove top grills or griddles on your gas appliance. If you use a stove top grill on a sealed gas burner, it will cause incomplete combustion and can result in exposure to carbon monoxide levels above allowable current standards. This can be hazardous to your health.
- Only certain types of glass, glass/ceramic, ceramic, earthenware, or other glazed cookware are suitable for use without breaking due to sudden changes in temperature. When using glass cookware, make sure it is designed for top-of-range cooking.

WARNING

**NEVER place any items on the cooktop or the back splash of the range. Hot air from the vent may ignite flammable items and will increase pressure in closed containers, which may cause them to burst and increase risk of injury.**

# IMPORTANT SAFETY INSTRUCTIONS

WARNING

## COOKING SAFETY

Before cooking in your new range, we recommend setting the oven to 400 °F (200 °C) on bake for 1 hour, then setting the oven to broil for 1 hour. For CGR48/HGR48/SGR48 models, do the same for the large oven, while 1 hour on bake will suffice for the small oven. There may be a smell and/or smoke — this is normal when the range is first heated as manufacturing oils burn off. Ensure the room where the range is installed is well ventilated by keeping air intakes open and/or by operating a range hood above the unit. After the oven cools, wipe it out with hot water and a kitchen-safe cleaner. We also recommend cleaning the racks and shelves before use.

- Carefully watch foods being fried at a high flame setting, and always heat fat slowly.
- If frying combinations of oils and fats, stir together before heating, and use a deep fat thermometer if possible to prevent overheating fat beyond the smoking point.
- Use the least possible amount of fat for effective shallow or deep-fat frying. Filling the pan too full of fat can cause spillovers when food is added.
- NEVER cook foods directly on the flame without a pot or pan; use proper cookware.
- DO NOT use a wok on the surface burners if the wok has a round metal ring that is placed over the burner grate to support the wok. This ring acts as a heat trap, which may damage the burner grate and burner ring. It also may cause abnormal carbon monoxide levels, potentially resulting in a health hazard.
- Foods for frying should be as dry as possible. Frost or moisture on foods can cause hot fat to bubble up and spill over the sides of the pan.
- NEVER try to move a pan of hot fat, especially a deep fat fryer. Wait until fully cool.
- DO NOT place plastic items on the cooktop; they may melt if left too close to the vent.
- Keep all plastics away from the surface burners.
- To prevent burns, always be sure burner knobs are in the OFF position and all grates are cool before attempting to remove them.

# OPERATION

DANGER **If you smell gas, immediately turn off the gas to the appliance and call a qualified service technician. Never use an open flame to locate a leak.**

- Always turn burner knobs to the OFF position before removing cookware.
- DO NOT lift the cooktop. Lifting the cooktop can cause damage and improper operation of the appliance.
- If the appliance is located near a window, DO NOT hang long curtains that could blow over the surface burners and catch on fire.
- DO NOT operate burners for any period of time without cookware on the grate. The finish on the grate may chip without cookware to absorb the heat.

## GUIDELINES FOR USING SURFACE BURNERS

Scan to follow along with a video.

- These ranges operate using electric ignition; all burners have a special auto re-ignition feature. Burners will relight if the flame goes out suddenly due to a wind gust or other reason. The auto re-ignition feature will automatically detect the loss of flame and reignite the burner if gas is still flowing.
- When pushing in one burner knob, sparking will occur on all surface burners, but only the burner activated will receive gas flow. This is a perfectly normal feature for gas ranges for all burners to spark at once when igniting a burner.
- Keep all burners clean. Especially after a spill or boil over, make sure you clean the affected burners before using them again. Food residue may clog the igniter and notches of the burner spread, stopping the burner from functioning correctly.
- Check that the burner flames are regular. They should be blue with little to no yellow tipping, and burn without fluttering all around the burner cap.

# OPERATION

## MANUAL FLAME ADJUSTMENT

- Each range includes a flame adjustment feature if burners experience irregular flame sizes or are too yellow or orange in color. Ranges are designed to ensure flames are set at appropriate levels. Should an adjustment be needed, follow these steps:
- Light one burner at a time and set it to the lowest position. Next, remove the knob by firmly and carefully pulling it straight out.
- Inside each burner is an adjustment valve. Using a 2 mm x 50 mm flathead screwdriver, locate the adjustment screw (see diagram — the screw is on the right) and turn the screwdriver to the right or left until the flame is adjusted to the desired minimum. Use a flashlight if it's difficult to see the adjustment screw.
- Make sure the flame does not go out when switching quickly from the HI to the LO position. **NOTE:** The high flame setting cannot be adjusted to be lower.
- **NOTE:** For the dual burner knobs on all three models, there are 2 screws to adjust if needed —1 for the inner ring and 1 for the outer ring. These screws are located on the left side of the adjustment valve.

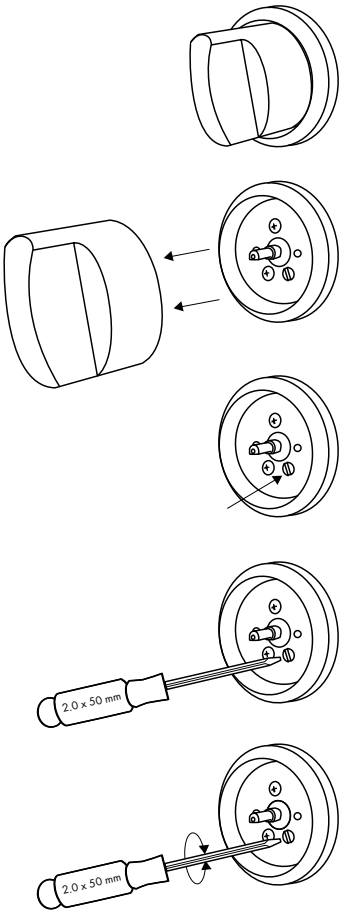


Scan to follow along with a video.

# OPERATION

## SURFACE BURNER OPERATION

1. To activate electric ignition for surface burners, push in the knob for the burner you wish to use release gas, as noted in the first image below.
2. Turn the control knob counter-clockwise to the "HI" position, as noted in the second image below. The spark will be released at the metal electrode of the white ceramic spark tip located on the side of the burner. Wait 0.5 to 2 seconds for ignition.
3. Once the burner lights, turn the control knob to adjust the desired heat. If the flame turns off and does not auto re-ignite, turn the burner off and repeat the above procedure.

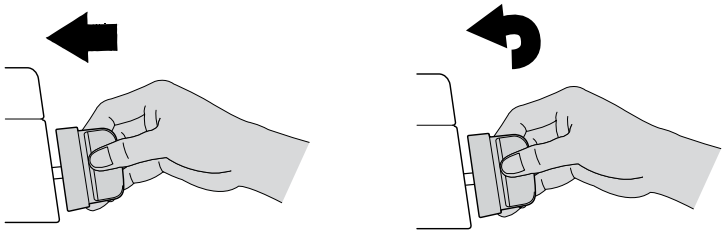

WARNING **Use care when utilizing the cooktop and oven knobs on your range. Turning knobs too far beyond their highest setting — or turning too hard in the incorrect clockwise motion — may permanently damage knobs.**

## USING THE BURNERS CORRECTLY

1. Always check that the burner caps are properly installed before operation:

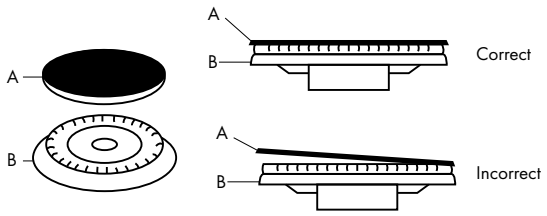


2. Verify that the flame of the range top burners is completely blue and with a regular aspect as shown at right:

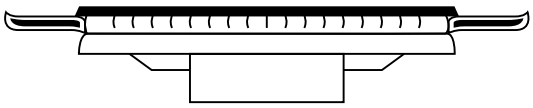

3. Never let flames wrap around cookware; this creates a safety hazard and can also damage your cookware:

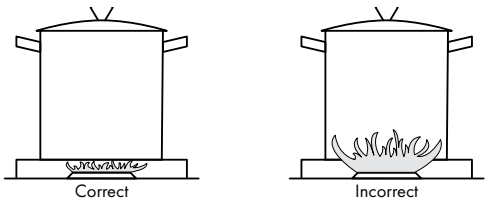


WARNING **DO NOT ignite burners if the black burner cap is not installed or not centered on the burner spread; the flame will be irregular and may increase injury risk.**

# OPERATION

## SURFACE BURNER KNOB FUNCTION

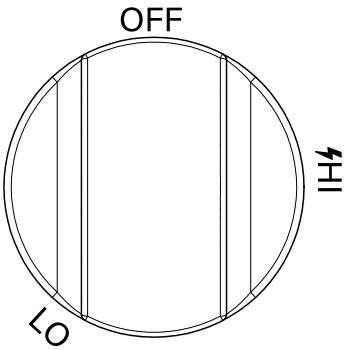


HI: Maximum Flame Height
LO: Minimum Flame Height

## DUAL BURNER KNOB FUNCTION

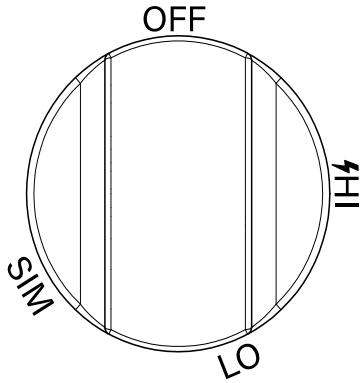


HI: Maximum Flame Height
LO: Minimum Flame Height
SIM: Simmer Mode

- These ranges feature special dual burners with a simmer setting (the CGR48/HGR48/SGR48 model has two dual burners). Use the simmer setting for melting chocolate and butter, cooking rice and delicate sauces, simmering soups and stews, and keeping cooked food hot.
- For other cooking options, simply adjust the flame on each knob between the maximum and minimum options for other settings, as referenced below:

| HEAT SETTINGS AND SIMPLE COOKING GUIDE | |
|---|---|
| SIM (Dual Burners Only) | Steaming rice, warming food, melting chocolate or butter. |
| LO | Melting large quantities. |
| Low-medium | Low-temperature frying, simmering large quantities, heating milk, cream sauces, gravies. |
| Medium | Sautéing and browning, braising, pan-frying, maintaining slow boil on large quantities. |
| Medium-Hi | High-temperature frying, pan boiling, maintaining slow boil on large quantities. |
| HI | Boiling liquid quickly, deep frying. This also ignites the burners. |

# OPERATION

## SURFACE BURNER FLAME SIZE

- When adjusting burner knobs, do so slowly until reaching your preferred flame size.
- When operating your appliance on natural gas, the flame should be steady and the color should always be blue, though flickers of orange and yellow are acceptable.
- If flames appear orange/yellow and stay that way, check the surrounding area. Candles, cleaning products, and other changes in atmosphere can affect flame color.
- If flame issues persist, and you had a professional technician conduct a liquid propane gas conversion procedure, it may not have been performed properly. Check that all orifices are correctly placed. If not, contact your installer. If using natural gas, contact your local gas company to check for unforeseen issues.

WARNING

## COMBUSTION SAFETY

- Gas appliances can cause minor exposure to several substances, namely benzene, carbon monoxide, formaldehyde, and soot, caused primarily by the incomplete combustion of natural gas fuel.
- Properly adjusted burners emitting clean blue flames will minimize incomplete combustion. Exposure to those substances can be minimized by venting with an open window or use of a ventilation fan or range hood above the unit.

WARNING

**When using the cooktop for the first time, burners may not ignite right away. Time is required for gas to fully fill the operating system. In this instance, do not keep burner knobs pushed in for longer than a few seconds.**

## POWER FAILURE

- If gas does not ignite within four seconds, turn off the knob and allow at least five minutes for any gas to dissipate. Repeat the lighting procedure outlined on page 20.
- If electricity or power fails in your home, surface burners can still be lighted manually if necessary. Simply hold a lighted match near a burner and turn the knob counterclockwise to the "HI" setting. After the burner lights, remove the lit match and turn the knob to the preferred setting.

# OPERATION

## COOKTOP MAINTENANCE

- To prevent the appliance from discoloring or staining, clean cooktop after each use, and wipe up acidic or sugary spills as soon as the appliance has cooled.
- The sealed burners of your appliance are not secured to the cooktop and are designed to be removed. Boil overs or spills will not seep underneath the cooktop. The burners should be cleaned after each use.
- Before maintenance and cleaning, disconnect the appliance and allow cooling down. For reasons of hygiene and safety, this appliance must always be kept clean.
- Take care when using cleaning products in spray form: never direct the spray onto the electrical wiring, thermostat, and bulb.
- Any food or liquid spills on the cooktop — or on the sides or bottom of the oven — must be cleaned up before cooking in order to avoid unpleasant smoke and/or the possibility of fire. See the "Care and Maintenance" section for more information.

**WARNING**

**According to the U.S. Department of Agriculture: DO NOT hold foods at temperatures between 40 °F to 140 °F (4 °C to 60 °C) more than 2 hours. Cooking raw foods below 275 °F (135 °C) is not recommended.**

## BURNER GRATES

- The grates must be properly positioned before cooking. Improper installation of the grates may result in scratching of the cooktop and poor combustion.
- Do not operate burners without appropriate pot/pans or cookware on the grates.
- Be sure to place cookware directly on the center of each grate in order to maximize cooking efficiency; see below for more.

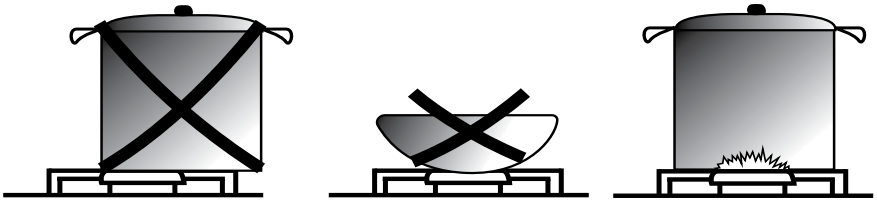

# OPERATION

## GRIDDLE OPERATION (CGR48/HGR48/SGR48 SERIES)

- Before first use, clean the cast iron griddle thoroughly with warm, soapy water to remove dust or any protective coating. Rinse with clean water and wipe off to dry with soft, clean, lint-free cloth.
- Place the griddle vertically (front to back) on top of any of the four burner grates until it slides into place; do not position the griddle horizontally (left to right) across multiple burner grates.
- To ensure even heating of the griddle, turn on the rear and front burners.

WARNING **The surface of the griddle may be hot for several minutes after use. Please allow sufficient time for the griddle to cool prior to moving and cleaning.**

## OVEN OPERATION

## OVEN OPERATION (CGR30/HGR30/SGR30 & CGR36/HGR36/SGR36)

- To turn on the oven, push in the knob and turn counter-clockwise. Once the oven has reached the desired temperature, the white indicator light next to the knob will turn off.
- To activate the Broil function, turn the knob clockwise to Broil. The white indicator light will illuminate once activated.
- There is 1 knob for CGR30/HGR30/SGR30 and CGR36/HGR36/SGR36 series ranges, which features minimum and maximum heat settings of 150 °F to 500 °F (65 °C to 260 °C), in addition to Broil.

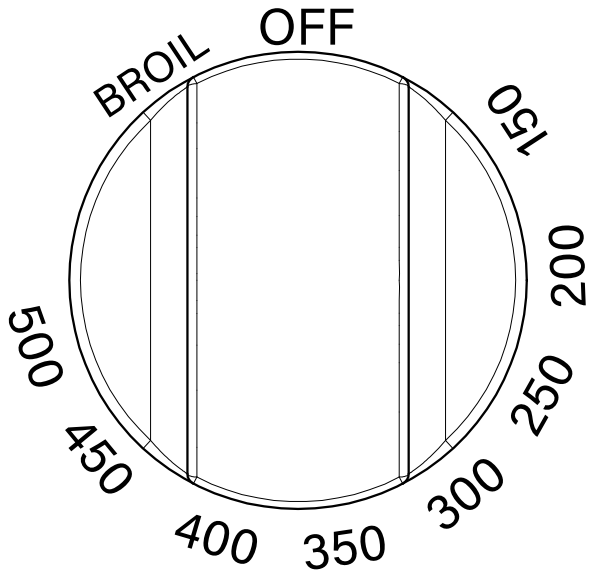

# OPERATION

## OVEN OPERATION (CGR48/HGR48/SGR48)

- There are 2 knobs for CGR48/HGR48/SGR48 series ranges, 1 each for the small and large ovens. The maximum heat setting on the small oven is 450 °F (230 °C). **NOTE:** The small oven does not have a Broil feature.
- To turn on either oven, push in the knob and turn counter-clockwise. Once the oven has reached the desired temperature, the white indicator light next to the knob will turn off.
- To activate the Broil function on the large oven, turn the knob clockwise to Broil. The white indicator light will illuminate once activated.

SMALL OVEN KNOB

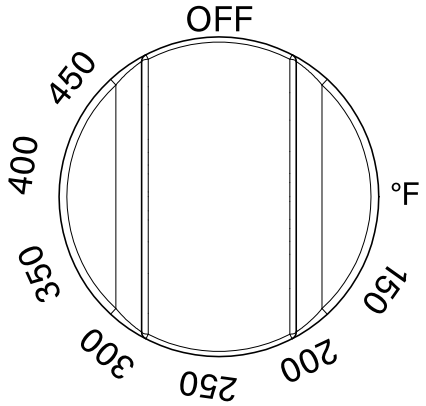


LARGE OVEN KNOB

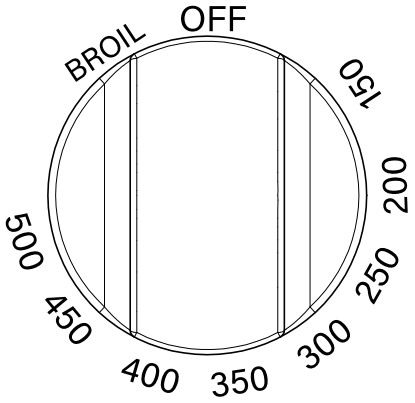


## OVEN VENTS

- The oven vent is located under the back splash on the back of the oven. Do not block the ducts in the oven vent when cooking in the oven. It is important that the flow of hot air from the oven and fresh air into the oven never be interrupted.
- Avoid touching the vent opening or nearby surfaces while the oven is on — they may become hot, which increases the risk of injury.
- **NOTE**: It is normal for steam or moisture to dispel from the oven vent and collect on the cooktop. This happens more often when baking foods that contain a lot of moisture. Condensation is more common in colder months due to the cooktop being colder than normal. Condensate water is a natural occurrence and is non-corrosive.

# OPERATION

WARNING

## INTERIOR OVEN SAFETY

- Never cover any slots, holes, or passages in the oven bottom or cover entire oven racks with materials such as aluminum foil. Doing so blocks air flow through the oven and may increase emittance of carbon monoxide.
- Aluminum foil may also trap heat, causing a fire hazard. Do not use aluminum foil on any porcelain surface within the oven wall. Doing so may irreparably damage the porcelain. Use of aluminum foil on any part of the range may void the manufacturer's warranty.

## OVEN FUNCTIONS AND FEATURES

### BAKE

- Natural airflow baking occurs when heat is transferred into the oven from the bake burners located in the bottom of the oven cavity, below the drip pan. Heat is then circulated by natural airflow. This is a traditional bake setting.
- To activate, turn the oven on and choose a temperature between 150 °F to 500 °F (65 °C to 260 °C). For CGR48/HGR48/SGR48, the small oven max bake temp is 450 °F (230 °C).
- **NOTE:** It typically takes 15–25 minutes to preheat to the desired temperature.
- To achieve optimal baking results, ZLINE recommends waiting until the oven is fully preheated before placing food inside.

### CONVECTION BAKE

- Heat is transferred from the bake burners in the bottom of the oven. The convection fan in the rear of the oven then circulates the hot air, allowing for more even heat distribution over and around the food. Convection cooking is faster, can be accomplished at lower temperatures, and provides more even temperatures than regular cooking.
- To activate, turn the oven on, choose a temperature, then press the Convection button on the front of the oven.
- **NOTE**: The CGR48/HGR48/SGR48 small oven does not have a Convection fan.
- To achieve optimal convection baking results, ZLINE recommends waiting until the oven is fully preheated before placing food inside.

# OPERATION

## BROIL

- When broiling, heat radiates downward from the top heating element for even coverage and fast cooking. Use the broil function to cook tender cuts of meat or to quickly crisp foods or brown the top of already-cooked dishes.
- **NOTE:** The oven door must be closed during broiling.
- **NOTE:** The CGR48/HGR48/SGR48 small oven does not have a Broil feature.

WARNING **Carefully monitor food being cooked under the broiler, as this function works quickly and can burn food within only a few minutes.**

## TO ACTIVATE THE BROILER:

1. Place the food on an oven-safe baking sheet or broiler pan.
2. Arrange the top oven rack in the location you desired and place the pan on the rack. Be sure to center the pan and position directly under the broil burner. If preheating the broil burner first, place the pan after the broil burner is preheated.
3. Turn the knob clockwise to Broil; the white indicator light will illuminate.

## PREHEATING AND OTHER BROILING TIPS

- Preheating is suggested when searing rare steaks and other meats. To preheat, turn the oven knob to the "Broil" position. Wait for the burner to become hot, approximately 2 minutes. **NOTE**: Preheating is not necessary when broiling meat well-done.
- Remove oven pans or broiler pans from the oven before preheating the broiler, as foods may stick on hot metal.
- The oven indicator light will remain on until the selector knob is turned to the OFF position or the temperature control cycles off.
- Always pull the oven rack out to the "stop" position before turning or removing food.
- For optimal results, use a broiler pan (not provided) and insert together to allow dripping grease to drain and be kept away from the high heat of the broiler.
- Broil temperature is 500 °F (65 °C).

WARNING **If you choose to use a broiler pan, DO NOT use one without the insert. DO NOT cover the broil pan insert with foil. The exposed grease could catch fire.**

# OPERATION

## OVEN COOKING

1. Use care when opening the oven door. Let hot air or steam escape before removing or placing food.
2. DO NOT heat unopened food containers. Pressure build-up may cause containers to burst and result in injury.
3. Keep oven vent ducts unobstructed at all times.

## OVEN RACK PLACEMENT

- Ranges are equipped with 2 commercial grade telescoping (sliding) racks. Racks are mounted on the appropriate guides situated on the sides of the oven compartment. The CGR48/HGR48/SGR48 small oven also comes with 2 telescoping racks.
- Insert the shelves between the top and bottom guide in any of the 5 positions available. To do so, slide out the racks to their full extensions, and then lift them up and out of the sliding mechanisms.
- Use care during this process, as the sliding mechanisms may have sharp edges.
- Always place racks in the desired location while the oven is cool.
- When touching and sliding out oven racks to check on hot food, DO NOT let potholders or oven mitts make contact with heating elements inside the oven.
- CGR30/HGR30/SGR30, CGR36/HGR36/SGR36, and CGR48/HGR48/SGR48 large oven racks are designed to support a minimum of 25 lb (11 kg).
  CGR48/HGR48/SGR48 small oven racks can support at least 15 lb (7 kg).

WARNING **Users should use caution with heavier food loads than those outlined above to limit risk of injury and/or damage to your range.**

# OPERATION

WARNING

## HEATING ELEMENT AND DOOR SAFETY

- DO NOT CLEAN DOOR GASKETS. The door gasket is essential for a good seal. Care should be taken not to rub, damage, or move the gasket.
- DO NOT USE ABRASIVE OVEN CLEANERS. No commercial oven cleaner or liner protective coating of any kind should be used in or around any part of the oven. Clean only the parts listed in the manual; before cleaning the oven, remove oven racks and clean separately.
- DO NOT TOUCH HEATING ELEMENTS OR INTERIOR SURFACE OF OVEN. Heating elements may be hot even though they are dark in color. Interior surfaces of an oven become hot enough to cause burns.
- In case of electric power failure, reset oven/broiler controls to the OFF position and do not attempt to use oven/ broiler until the power has been restored.
- During and after use, do not touch or let clothing or other flammable materials come into contact with the heating elements or interior surfaces of the oven until they have had sufficient time to cool.
- Other surfaces of the appliance may become hot enough to cause burns, such as oven vent openings and surfaces near these openings, oven doors, and oven glass window.
- Take care to reset all cooktop/oven/broiler burner controls to the OFF position after use of the appliance.
- It is normal for moisture to form between the oven door's two glass panels, especially when cooking or baking foods with a lot of moisture. The range is designed with vents between the panes of glass; any moisture should dissipate within 12–24 hours.
- When using the range for the first time you may notice the following:
  - There may be an odor. This is quite normal when the oven is first heated as residual oil from production of parts will be burnt off quickly.
  - There may be noises. This is also quite normal as new parts move and settle into place during the initial heating process.

# CARE AND MAINTENANCE

## REMOVING THE OVEN DOOR AND KICK PLATE

You can change the color and look of your range by changing the oven door. For normal range use, it is not recommended to remove the door. Make sure the oven is turned off and cool when replacing the door. **NOTE:** The process below references an CGR36/HGR36/SGR36 series range; the process is the same for CGR30/HGR30/SGR30 and CGR48/HGR48/SGR48 models.

Scan to follow along with a video.

**WARNING** **Be careful when removing and lifting up the door, as it is quite heavy. Use a helper if needed. DO NOT lift the door by the handle. Doing so may cause damage to the range that is not covered under the manufacturer's warranty.**

1. Open the door completely.

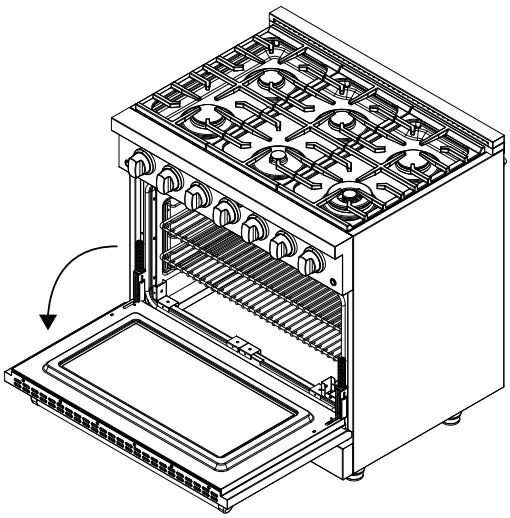

2. Lift up and pull the small levers located on the two hinges all the way back to unlock.

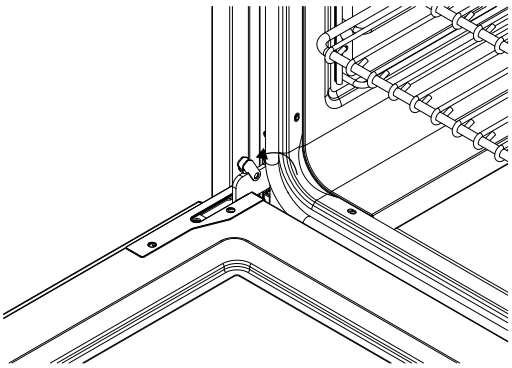

3. Swing the open oven door close until the unlocked levers make contact with the oven frame. The door should be roughly 4" (102 mm) from being completely closed.

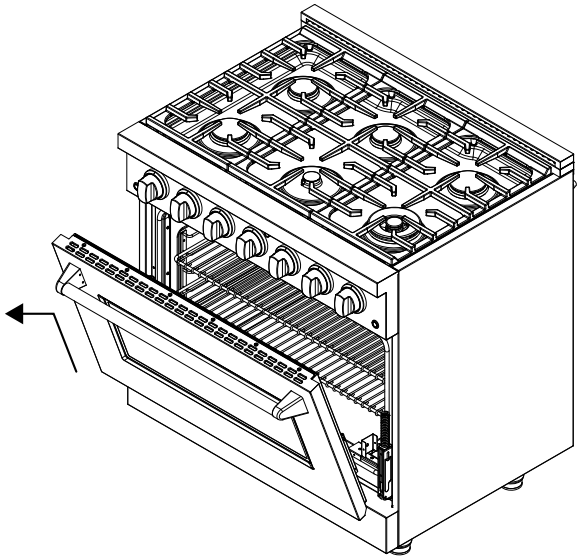

4. Lift the door up and pull it toward you, releasing it from the hinge receivers, as outlined in the image above. The door will gently detach from the oven. If the door does not easily detach from the oven, do not apply force. Make sure the levers are unlocked. To install a new door, follow the reverse of steps 1–4.

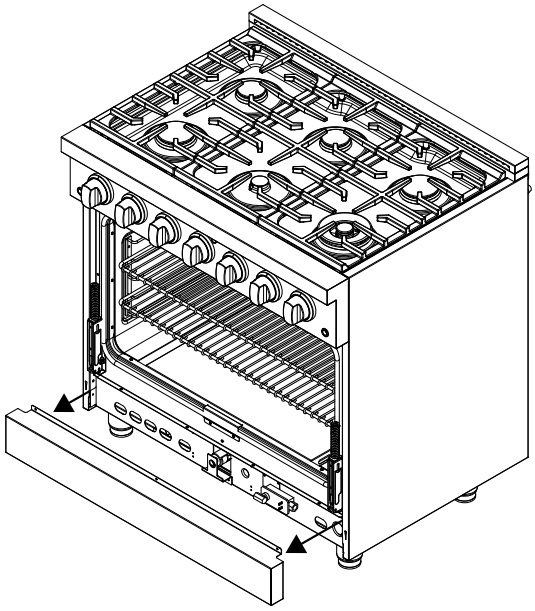

5. Remove the kick plate by unscrewing 3 screws securing it to the oven — 2 on each side of the top lip and 1 in the middle, as shown above. Then, lift up and pull out of the holes on each side to remove the kick plate. To install a new kick plate, position the kick plate into the holes on each side of the range and then replace the same 3 screws.

# CARE AND MAINTENANCE

## REPLACING THE OVEN LIGHTS

WARNING **To prevent electrical shock or injury, make sure the oven and light bulbs are cool and power to the oven has been turned off before replacing light bulbs.**

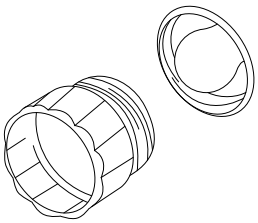

To replace the G9 halogen light bulbs (2) located at the upper left and right corners of the CGR30/HGR30/SGR30, CGR36/HGR36/SGR36, and CGR48/HGR48/SGR48 large oven, unscrew the protection cap that projects out inside the oven. The CGR48/HGR48/SGR48 small oven has 1 bulb.

NOTE: Touching bulbs with your fingers may cause them to burn out. We recommend using protective gloves or a clean cloth for this process.

## CLEANING YOUR RANGE

WARNING **Do not attempt any of the following cleaning methods until all burners are off and the oven is completely cool. We also recommend disconnecting power before cleaning the unit to limit risk of electric shock.**

IMPORTANT: During cleaning, never use abrasive cleaners. Scratches on the stainless steel surfaces are permanent. DO NOT clean the range when hot. Do not use Clorox bleach or alcohol wipes to clean stainless steel. Always follow label instructions on cleaning products.

## CONTROL KNOBS

- Use a damp soapy cloth for everyday cleaning of the knobs. For heavier cleaning for grease, etc., apply a nonabrasive liquid detergent to a damp cloth.
- Use care not to rotate the knobs when cleaning to avoid the release of gas.
- For hard-to-reach stains, you can remove knobs by gripping them and carefully pulling them straight out. Clean and dry knobs completely before replacing, using care to put knobs on the correct valves where they were removed.
- Make sure knobs are completely dry before using the range.

WARNING **Acidic fluids such as tomato sauce or lemon juice should not be left on the cooktop for extended periods, as etching may occur. This type of damage is not covered under the manufacturer's warranty.**

# CARE AND MAINTENANCE

## BURNER GRATES

- Cast iron grates should only be used in their proper positions. DO NOT operate a burner for an extended period of time without cookware on the grate.
- Make sure grates are completely cool, then clean with hot water or white vinegar. DO NOT place in a dishwasher.
- When replacing grates, be sure they are positioned securely over the burners.
- Note that grates have rubber pads on the feet that come into contact with the appliance to avoid scratches. After cleaning, verify the rubber pads are still there. Should they come off, they can be reapplied using a heat-resistant adhesive.

## ENAMELED CAST IRON GRIDDLE (CGR48/HGR48/SGR48 MODEL ONLY)

- To clean, make sure the griddle is completely cool, then clean with hot water or white vinegar. DO NOT place in a dishwasher.
- Unlike traditional cast iron skillets or griddles, you do NOT need to regularly season (for example, applying a thin layer of oil and then heating it at a high temperature for roughly 1 hour) your enameled cast iron griddle.

## BURNER CAPS

- Lift off when fully cool. Wash burner caps in hot, soapy water and rinse with clean water. To remove burned-on food particles, gently scrub with a plastic scouring pad. Thoroughly dry before returning the caps to the appliance.
- Do not use cleaners for stainless steel surfaces as these caps are not stainless steel.

## BURNER SPREADS

- Lift off when fully cool. Wash in hot, soapy water and rinse with clean water. Remove food or debris between burner slots using a small non-abrasive brush like a toothbrush.
- We recommend cleaning the burner slots routinely with a small gauge wire or needle and especially after bad spillovers that could clog these holes.
- Burner spreads and burner caps are NOT dishwasher safe.

## STAINLESS STEEL

- To clean the stainless steel surface of the range, use warm sudsy water or a stainless steel cleaner or polish. Always wipe the surface in the direction of the grain. Follow product label instructions for cleaning stainless steel.
- DO NOT use a steel wool pad as it will scratch the surface. Do not use cleaners with chlorides or chlorines. Do not use harsh scrubbing cleaners.
- Use a clean, hot, damp cloth to remove soap. Dry with a dry, clean cloth.

# CARE AND MAINTENANCE

## DOOR HANDLE

- Clean with a warm soap and water solution; dry with a soft, lint-free cloth.
- Do not use abrasive cleaners or scrubbers; they will permanently damage the finish.

## OVEN GLASS

- Clean all glass surfaces with a warm soap and water solution. Use a mild glass cleaner to remove fingerprint or smears. Dry with a soft, lint-free cloth.

## PORCELAIN SURFACES

- Clean the cooktop, oven interior, and inner door liners with a warm soap and water solution. Rinse and dry with a soft cloth. Never use abrasive powders or liquids. Do not leave acid or alkaline substances on the porcelain parts (such as vinegar, lemon juice, salt, tomato sauce, etc). Use a rubber spatula to remove food and fat residues.

## OVEN RACKS

- Clean oven racks with a warm soap and water solution. To clean heavy soil, use a scouring pad such as steel wool with plenty of water.

## OVEN FRAME

- Clean with hot water, soap-filled steel-wool pads, or kitchen-safe cleaners. Rinse well with clean water and dry. DO NOT clean the gasket. The fiberglass material of the oven door gasket cannot withstand abrasion. It's imperative the gasket remains intact.

## OVEN DOOR

- Use soap and water to thoroughly clean the top, sides, and front of the door. Rinse well. Use a glass cleaner to clean the glass on the outside of the door. Do not use oven cleaners, cleansing powders, of harsh abrasives on the outside of the door.
- Do not allow excess water to run into any holes or slots in the door. Any soap left on the liner causes additional stains when the oven is heated.

## DRIP PAN

- Each range comes with a drip pan at the bottom of the oven to catch food debris from contacting the lower heating element. Remove the drip pan by lifting up from each front corner and sliding out, using care to not damage the lower burner spread in the process, and clean with a warm soap and water solution.

# TROUBLESHOOTING

- Please review this list for common troubleshooting tips before calling for service, as this may save you time and money.
- This list contains frequently encountered problems that are not results of faulty workmanship or material use.
- Your product may not have some of the features described here.

WARNING

**If a problem cannot be resolved after following the instructions in the manuals, please contact ZLINE customer service at 1-614-777-5004. Never attempt to repair or disassemble gas lines, burner spreads, or the internal electrical wiring of your range.**

| SYMPTOM | POSSIBLE CAUSE | POSSIBLE SOLUTION |
|---|---|---|
| No ignition spark. | Ignition module has failed. | If there is still no spark ignition, the appliance burners can still be used if needed. To light them:<br>1. Holding a lit match to the flame spreader, push in on the control knob and turn counterclockwise to HI.<br>2. When the flame is burning all the way round the burner, you may adjust the heat.<br><br>Contact ZLINE customer service. |
| Igniters spark continuously after flame ignition. | Power supply polarity is reversed. | Contact ZLINE customer service. |
| | Igniters are wet or dirty. | Dry or clean igniters. |
| Burners will not light. | Burner parts or igniters may be wet, dirty, or misaligned. | Check that the burner parts are clean, dry, and correctly assembled. |
| | Spark tip igniters may be damaged or dirty. | Check that the igniters are clean and not damaged. |

# TROUBLESHOOTING

| SYMPTOM | POSSIBLE CAUSE | POSSIBLE SOLUTION |
|---|---|---|
| Igniters are sparking but burners are not igniting. | Gas shut-off valve is in the "OFF" position. | Turn shut-off valve to the "ON" position. |
| Cooktop burners will not stay lit and auto reignition is not working. | Spark tip or igniter failure. | Contact ZLINE customer service. |
| The flames have suddenly gone out. | A draft or spill has extinguished the flame. | Turn the burners off, cleaning the burners and cooktop area. Once clean, reignite top burners. |
| Burner flame goes out at low setting | Low gas pressure. | Contact gas company. |
| | Air intake holes around burners are obstructed. | Remove obstruction from air intake holes. |
| | Low flame adjustment may be set too low. | Readjust. |
| Top burners do not light or do not burn evenly. | Plug on appliance is not completely inserted in the electrical outlet. | Make sure the unit is properly connected to the power supply. |
| | Burner holes on the side of the burner may be clogged. | Remove the burner heads and clean them. Check the electrode area for burned-on food or grease. |

# TROUBLESHOOTING

| SYMPTOM | POSSIBLE CAUSE | POSSIBLE SOLUTION |
|---|---|---|
| Burner flames are very large and yellow. | Burner spread ports are clogged. | Clean burner spread ports with straightened paperclip, needle, or wire. |
| | Burner spreads or caps are not positioned properly. | Remove and carefully re-install burner spreads and caps. |
| | Appliance is being operated with the wrong type of gas. | Ensure that the type of appliance matches the gas supply. |
| | Regulator is not installed, is faulty, or is set for the wrong type of gas. | Have a qualified technician replace regulator or set regulator for proper gas. |
| Brass burner(s) change color | Brass burners naturally oxidize over time and form a patina that is a beautiful deep brass hue. This process ensures our brass burners are corrosion resistant and is not cause for a return. | This is a normal occurrence for brass burners; no troubleshooting is required. |
| "Cracking" or "popping" sound is heard coming from appliance. | This is the sound of metal heating and cooling. | This is normal for oven operation. |
| Steam/condensation is coming from the back splash oven vent. | Cooking foods high in moisture or if the ambient temperature is cold. | Condensate water is a natural occurrence and is non-corrosive. |
| Nothing works. | Power supply is not energized. | Have an electrician check the power supply, including the house circuit breaker, wiring and fuses. |
| Oven will not heat. | Oven settings are not corrected. | Adjust temperature, or rack position. |
| Foods over-cooked or under-cooked. | Incorrect cooking temperature. | Dry or clean igniters. If problem persists, contact ZLINE customer service. |

# WARRANTY

## COVERAGE

ZLINE Kitchen and Bath ("ZLINE") gas ranges have a one year parts and service warranty and a limited lifetime warranty on burners, which includes parts and labor for spark tips.

ZLINE warranty periods begin from the original date of product delivery and solely cover the original purchaser of the product, delivered new and in its original carton. The limited warranty covers all parts and labor for necessary repairs if any part of the product, or the product itself, proves to be defective in materials or workmanship. The product must be deemed serviceable via troubleshooting with the ZLINE Customer Experience team. All service on ZLINE products under warranty must be performed by ZLINE-approved and ZLINE-certified service providers unless otherwise specified by ZLINE. Service will be provided during normal business hours. Products must be unobstructed and accessible to the service provider at the time of service. ZLINE's liability is limited to the original purchase price of the product. Additional injuries, losses, damages, or other inconveniences caused by product malfunction or defects in materials are not covered under the terms of this warranty.

## TERMS

ZLINE warranties apply only to the original purchaser of a ZLINE product installed for normal residential use. This is defined as a single-family, residential dwelling in a non-commercial setting. Any warranty claim stemming from installation, operation, or any other use within a commercial setting is not covered under this limited warranty. Commercial settings include, but are not limited to: schools, churches, hotels, restaurants, vacation rentals such as Airbnb, daycare centers, private clubs, fire stations, common areas in multi-family dwellings, nursing homes, food service locations, and institutional food service locations such as hospitals or correctional facilities.

This warranty is non-transferable and will not under any circumstance be extended based on the date of installation — the warranty period takes effect from the date of delivery and only covers the original purchaser. The warranty applies only to products installed in the contiguous United States and the District of Columbia. Failure to secure certified warranty service per these terms will result in a forfeiture of the remaining warranty. Out-of-pocket payments will not be reimbursed unless prior approval is received from ZLINE and/or ZLINE-certified service contract partners. Unapproved out-of-pocket payments for service will not be reimbursed. All warranty procedures must be followed to maintain warranty coverage.

# WARRANTY

If a product qualifies within the service window provided under these warranty terms, and ZLINE is unable to repair the product or a defective part of the product after a reasonable number of attempts, ZLINE reserves the right to offer to replace the defective part or the product or provide the original purchaser a full refund of the purchase price of the product (not including installation, removal, or other charges that were not included in the original purchase price). The original purchaser of the product must provide the original proof of purchase, including the purchase date, when filing a claim to obtain replacement parts, service, or refunds. Additionally, the original purchaser of the product must provide the serial number of the product when filing a claim to obtain replacement parts, service, or refunds.

This warranty shall not apply to any ZLINE product in which the original factory serial number has been removed, altered, or cannot be readily determined for any reason. Further, ZLINE is not responsible for damage resulting from, but not limited to: shipment, delivery, or improper installation; negligence or improper maintenance, misuse, or abuse of the product; unauthorized alteration, modification, or tampering with the product; accident, fire, floods, pest infestations, pandemics, natural disasters, or any other unpreventable or unexplained acts of nature, commonly referred to as "acts of God"; flare-up fires or damages caused by improper electric supply, electrical line current, voltage, or power surges; and service to correct installation not in accordance with the instructions contained in ZLINE's product manuals and/or with local government codes.

This warranty does not apply to aesthetic damage, scratches, or natural wear caused by normal use; second-hand, open box products, or products purchased from an unauthorized retailer; improper liquid propane gas conversion or damage related to improper liquid propane gas conversion; burner flame adjustments or related complaints; corrections regarding normal adjustments or settings or local gas supply issues resulting in low pressure or other issues; damages or issues stemming from alteration or tampering with the range, including, but not limited to, painting any portion of the product's interior or exterior and cutting the supplied power cord to manually hardwire the product; and service for gas pressure issues related to installation at high altitudes. A high-altitude pressure regulator must be sourced by the customer.

In the event service is dispatched, and it is discovered that the reported issue is not covered under warranty based on the disclaimers above, the customer will be responsible for all service fees. Failure to pay these fees will result in the forfeiture of remaining warranty coverage.

# WARRANTY

Information contained within ZLINE's installation and user manuals, in addition to product information included on ZLINE's website and all related digital listings, do not cover every possible condition and situation that may occur during the installation or operation of ZLINE products.

ZLINE reserves the right to make changes at any time to its products when considered safe, necessary, and useful. Always check the ZLINE website for the most up-to-date version of its product manuals: www.zlinekitchen.com/pages/manuals.

Do not install or operate any ZLINE product if it has missing or broken parts or if it arrives damaged due to shipping. If ZLINE products arrive damaged, contact ZLINE Customer Experience at 1-614-777-5004 for help. Failure to report a damaged appliance prior to installation or operation may void the warranty.

ZLINE disclaims responsibility for damage or injury caused by improper installation or use of any of its products. ZLINE is under no obligation, by law or otherwise, to provide concessions, including repairs, prorates, rebates, discounts, or replacements, once the warranty has expired.

## SERIAL NUMBER LOCATION

Please write down the model number (highlighted in the image below as the "SKU") and serial number of your appliance. Both numbers are located on the rating tag located on the right front edge of your range. Do not remove permanently affixed labels, warnings, or plates from the product. This will void the warranty. You may also consider attaching your receipt or proof of purchase to this manual.

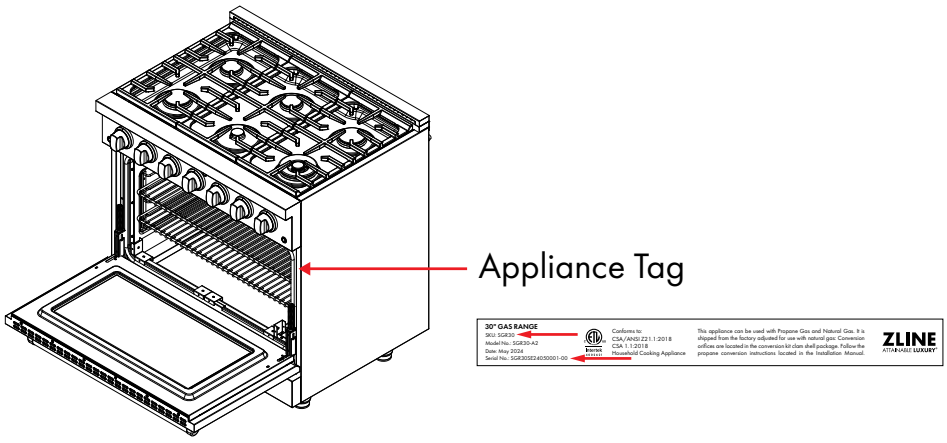

# WARRANTY

SERVICE

For warranty service, please contact our Customer Service team at 1-614-777-5004 or visit www.zlinekitchen.com/contact to utilize our online Customer Experience Portal.

Scan the QR code to view the most up-to-date version of our Installation Manual and User Manual.

Need to purchase a part or accessory for your ZLINE product?
Visit www.zlineparts.com, ZLINE's official parts distribution partner.

3.1.0

1-614-777-5004

www.zlinekitchen.com

contact@zlinekitchen.com

ZLINE

ATTAINABLE **LUXURY**®