CORDLESS LEAF BLOWER

USER MANUAL

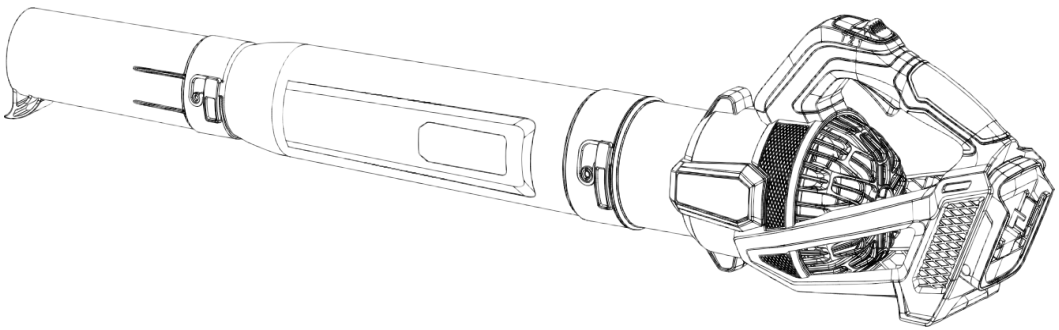

18V
LITHIUM- ION

HL-DLB56A-0WR

NOTE: Battery and Charger NOT Included

WARNING: To reduce the risk of injury, the user must read and under stand the owner's manual before using this product.

What's in the box 1

Specification 1

Explanations and symbols,cautions and warnings 2

Important safety warnings 3

- General power Tool safety warnings 3
- Leaf blower safety warnings 6

Product description AND identifications 7

Assembly and operating instructions 7

- Intended use 7
- Assembling the air tube and tuyere for blowing 7
- Before operation 8
- Operation 8

CARE AND CLEANING 9

- Cleaning 9
- Maintenance and storage 9

TROUBLE SHOOTING 10

ENVIRONMENTAL INFORMATION 10

WHAT'S IN THE BOX



Blower tube



Blower body



Tuyere

SPECIFICATION

Technical Data	
Model	HL-DLB56A-0WR
Voltage	18V DC
No load speed	20000 RPM
Max. Air Speed	150 MPH
Max. Air Volume	600 CFM

Note:The above specifications are the MAXIMUM capacities of the tool

EXPLANATIONS AND SYMBOLS,CAUTIONS AND WARNINGS

Symbol	Explanation
	Indicates danger, warning, or caution.
	Do not expose to rain
	Read operator's manual
	Wear ear protection.
	Wear eye protection.
	Keep bystanders away
	Switch off and remove battery pack before cleaning or maintenance.
	Do not throw on fire.
	Do not throw into water.
	Do not subject the battery to strong sunlight over long periods of time. Do not leave on a heater (max.45°C).
	The charger is for indoor use only.
 Li-Ion	Batteries contain Li-ion. Do not dispose of waste batteries in domestic waste. Contact local authority to find out how to dispose of batteries.
	Double insulation.
	Conforms to relevant safety standards.
	Recycle unwanted materials instead of disposing of them as waste. All tools, hoses and packaging should be sorted, taken to the local recycling centre and disposed of in an environmentally safe way.
	Sound power level.

IMPORTANT SAFETY WARNINGS

General power Tool safety warnings

⚠ WARNING Please read the following instructions carefully, failure to do So could lead to serious personal injury. when using the electric blower, basic safety precautions, including the following , should always be followed to reduce the risk of fire, electric shock and personal injury. Read all these instructions before operating this product and save these instructions.
The term "power tool" in the warnings refers to your mains-operated (corded) power tool or battery-operated (cordless) power tool.
Become familiar with the owner's manual before attempting to operate this machine.

• This machine is not intended for use by persons (including children) with reduced physical , sensory or mental capabilities , or lack of experience and knowledge , unless they have been given supervision or instruction concerning use of the appliance by a person responsible for their safety.
• Children should be supervised to ensure that they do not play with the appliance.
• The machine is only to be used with the power supply unit provided with the machine.

Important! Read carefully before use,keep for further reference.

1. Work area safety

a) Keep work area clean and well lit. Cluttered or dark areas invite accidents.
b) Do not operate power tools in explosive atmospheres, such as in the presence of flammable liquids, gases or dust. Power tools create sparks which may ignite the dust or fumes.
c) Keep children and bystanders away while operating a power tool. Distractions can cause you to lose control.

2. Electrical safety

a) Power tool plugs must match the outlet. Never modify the plug in any way. Do not use any adapter plugs with earthed (grounded) power tools. Unmodified plugs and matching outlets will reduce risk of electric shock.
b) Avoid body contact with earthed or grounded surfaces, such as pipes, radiators, ranges and refrigerators. There is an increased risk of electric shock if your body is earthed or grounded.
c) Do not expose power tools to rain or wet conditions. Water entering a power tool will increase the risk of electric shock.
d) Do not abuse the cord. Never use the cord for carrying, pulling or unplugging the power tool. Keep cord away from heat, oil, sharp edges or moving parts.

e) When operating a power tool outdoors, use an extension cord suitable for outdoor use. Use of a cord suitable for outdoor use reduces the risk of electric shock.

f) If operating a power tool in a damp location is unavoidable, use a residual current device (RCD) protected supply. Use of an RCD reduces the risk of electric shock.

3. Personal safety

a) Stay alert, watch what you are doing and use common sense when operating a power tool. Do not use a power tool whileyou are tired or under the influence of drugs, alcohol or medication. A moment of inattention while operating power tools may result in serious personal injury.

b) Use personal protective equipment. Always wear eye protection. Protective equipment such as a dust mask,non-skid safety shoes, hard hat or hearing protection used for appropriate conditions will reduce personal injuries.

c) Prevent unintentional starting. Ensure the switch is in the off-position before connecting to power source and/or battery pack, picking up or carrying the tool. Carrying power tools with your finger on the switch or energising power tools that have the switch on invites accidents.

d) Remove any adjusting key or wrench before turning the power tool on. A wrench or a key left attached to a rotating part of the power tool may result in personal injury.

e) Do not overreach. Keep proper footing and balance at all times. This enables better control of the power tool in unexpected situations.

f) Dress properly. Do not wear loose clothing or jewellery. Keep your hair and clothing away from moving parts. Loose clothes, jewellery or long hair can be caught in moving parts.

g) If devices are provided for the connection of dust extraction and collection facilities, ensure these are connected and properly used. Use of dust collection can reduce dust-related hazards.

h) Do not let familiarity gained from frequent use of tools allow you to become complacent and ignore tool safety principles. A careless action can cause severe injury within a fraction of a second.

4. Power tool use and care

a) Do not force the power tool. Use the correct power tool for your application. The correct power tool will do the job better and safer at the rate for which it was designed.

b) Do not use the power tool if the switch does not turn it on and off. Any power tool that cannot be controlled with the switch is dangerous and must be repaired.

c) Disconnect the plug from the power source and/or remove the battery pack, if detachable, from the power tool before making any adjustments, changing accessories, or storing power tools. Such preventive safety measures reduce the risk of starting the power tool accidentally.
d) Store idle power tools out of the reach of children and do not allow persons unfamiliar with the power tool or these instructions to operate the power tool. Power tools are dangerous in the hands of untrained users.
e) Maintain power tools and accessories. Check for misalignment or binding of moving parts, breakage of parts and any other condition that may affect the power tool's operation. If damaged, have the power tool repaired before use. Many accidents are caused by poorly maintained power tools.
f) Keep cutting tools sharp and clean. Properly maintained cutting tools with sharp cutting edges are less likely to bind and are easier to control.
g) Use the power tool, accessories and tool bits etc. in accordance with these instructions, taking into account the working conditions and the work to be performed. Use of the power tool for operations different from those intended could result in a hazardous situation.
h) Keep handles and grasping surfaces dry, clean and free from oil and grease.Slippery handles and grasping surfaces do not allow for safe handling and control of the tool in unexpected situations.

5. Battery tool use and care

a) Recharge only with the charger specified by the manufacturer. A charger that is suitable for one type of battery pack may create a risk of fire when used with another battery pack.
b) Use power tools only with specifically designated battery packs. Use of any other battery packs may create a risk of injury and fire.
c) When battery pack is not in use, keep it away from other metal objects, like paper clips, coins, keys, nails, screws or other small metal objects, that can make a connection from one terminal to another. Shorting the battery terminals together may cause burns or a fire.
d) Under abusive conditions, liquid may be ejected from the battery; avoid contact. If contact accidentally occurs, flush with water. If liquid contacts eyes, additionally seek medical help. Liquid ejected from the battery may cause irritation or burns.
e) Do not use a battery pack or tool that is damaged or modified. Damaged or modified batteries may exhibit unpredictable behaviour resulting in fire, explosion or risk of injury.
f) Do not expose a battery pack or tool to fire or excessive temperature. Exposure to fire or temperature above 130 °C may cause explosion.

g) Follow all charging instructions and do not charge the battery pack or tool outside the temperature range specified in the instructions. Charging improperly or at temperatures outside the specified range may damage the battery and increase the risk of fire.

6. Service

a) Have your power tool serviced by a qualified repair person using only identical replacement parts. This will ensure that the safety of the power tool is maintained.

b) Never service damaged battery packs. Service of battery packs should only be performed by the manufacturer or authorized service providers.

Leaf blower safety warnings

a) Do not use the machine in bad weather conditions, especially when there is a risk oflightning. This decreases the risk of being struck by lightning.

b) Wear eye protection and ear protection. Adequate protective equipment will reduce the risk of personal injury.

c) While operating the machine, always wear non-slip and protective footwear. Do not operate the machine when barefoot or wearing open sandals. This reduces the risk of injury to the feet.

d) Do not wear loose fitting clothing or articles such as scarves, strings, chains, ties,etc., that could get drawn into the air inlets. Tie back or cover long hair to make sure it does not get drawn into the air inlets. If any of these items are drawn into the air inlets, it can increase the risk of personal injury.

e) Keep bystanders away while operating the machine. Thrown debris can increase the risk of personal injury.

f) Do not use in vacuum mode without the debris collector in place. Thrown objects canincrease the risk of personal injury.

g) Never point the blower nozzle in the direction of people or pets or in the direction of windows. Use extra caution when blowing debris near solid objects, such as trees,automobiles and walls that can cause debris to ricochet. Thrown objects can damage property and increase the risk of personal injury.

h) Do not use the machine to blow anything that is burning or smoking, such as cigarettes, matches or hot ashes. These ignition sources may increase the risk of fire.

i) Do not touch the fan while still in motion. Turn off the machine, wait until the fan stops and unplug the machine, before removing any part that may give access to the fan.This reduces the risk of injury from moving parts.

j) When clearing jammed material or servicing the machine, make sure the power switch is off. Unexpected actuation of the machine while clearing jammed material or servicing may increase the risk of personal injury.

PRODUCT DESCRIPTION AND IDENTIFICATIONS

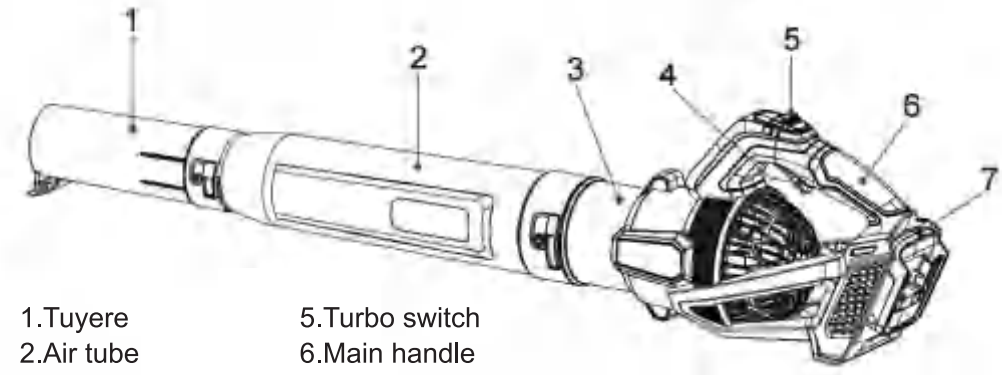

1.Tuyere
2.Air tube
3.Air duct
4.Switch trigger
5.Turbo switch
6.Main handle
7.Battery chamber

ASSEMBLY AND OPERATING INSTRUCTIONS

Note:To reduce the risk of injury,user must read instruction manual

Intended use

This product is intended domestic blowing

⚠ WARNING Before assembly and adjustment to the blower,ensure the blower is turned off and the battery pack is removed.

Assembling the air tube and tuyere for blowing

Note:Before assembling the tube,make sure that the battery is not inserted in the product.

• Align the protrusions on the air duct with the grooves on the air tube,the insert the air tube onto the air duct and then turn it to lock it into place.

• Before operation,make sure the air tube is securely locked on the air duct.To remove the air tube,perform the installation procedure in reverse.

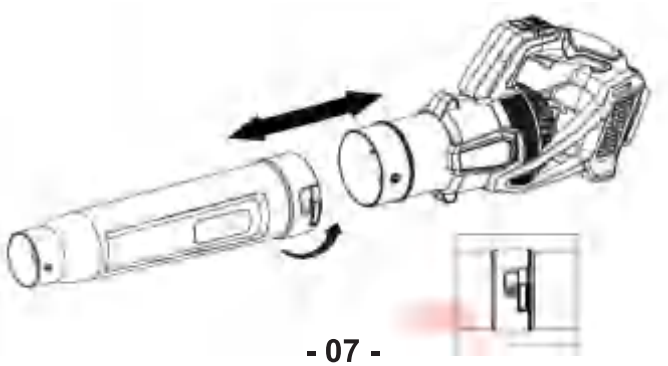

Assembly and Adjustments

• Align the protrusions on the air tube with the grooves on the tuyere,the insert the tuyere onto the air tube and then turn it to lock it into place.
• Before operation,make sure the tuyere is securely locked on the air tube.To remove the tuyere,perform the installation procedure in reverse.

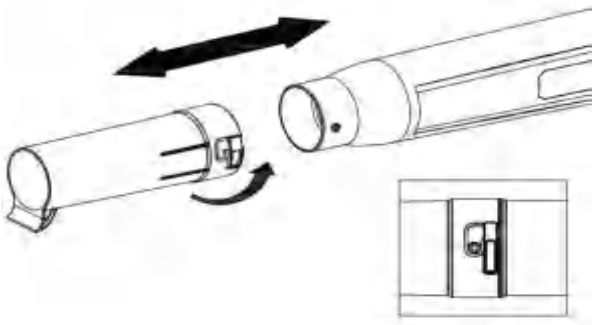

Before operation

WARNING: The charger and battery pack are specially designed to work together so do not attempt to use any other devices. Never insert or allow metallic objects into your charger or battery pack connections otherwise an electrical failure and hazard will occur.

Operation

1.Insert the battery pack into the battery compartment.
2. After grasping the handle, simply trigger the switch button upwards to turn on the device (any of the three gears can be selected to start the operation).
3. Keep the switch button pressed, and by simply pushing/pulling the speed control knob, you can switch between the different gears (1.2.T) for operation.

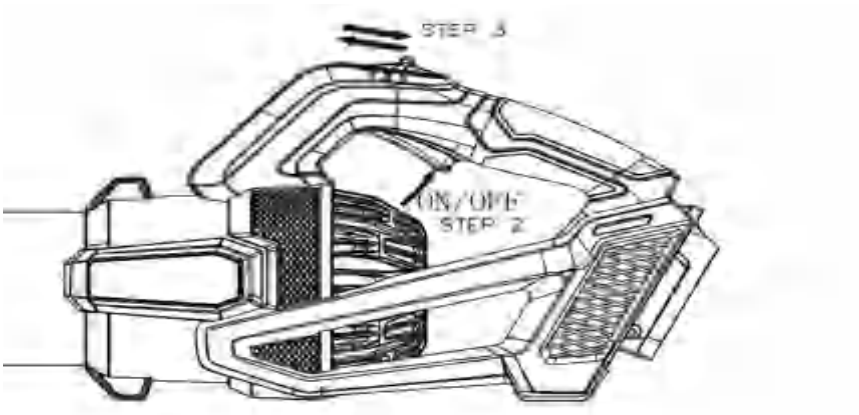

CARE AND CLEANING

⚠ WARNING To avoid serious injuries, always switch off and remove the battery before cleaning or maintenance.

⚠ WARNING Have repairs and maintenance work that are not described in these instructions carried out by our service center. Use only original parts.

Cleaning

• The device must neither be sprayed with water nor placed in water. There is a risk of electric shock.
• Keep the ventilation slots, motor housing and handles of the device clean. Use a damp cloth or brush to do this. Do not use cleaning agents or solvents. This could cause irreparable damage to the device.
• Keep the ventilation slots free of dust and debris to prevent the cordless blower from overheating.
• Clean the blower regularly with a soft cloth, preferably every time you use it. If the dirt doesn't come out, use a soft cloth dampened with soapy water.

Maintenance and storage

• Keep all nuts, bolts and screws tight to be sure the blower is in safe working condition.
• If the parts are worn or damaged, replace them with parts provided by Toolstation or qualified service center.
• Store the blower in a dry place out of the reach of children. Always remove the battery pack from the machine before storage of the machine.
• When you stop the blower for inspection, servicing, storage, or changing accessory, switch offl the blower and make sure that all moving parts come to a complete stop, and remove the batteryl pack. Cool down the blower before making any work on the blower. Maintain the blower with care and keep it clean.
• Always cool down the blower before storing.
• The hook hole on the bottom of the machine is convenient for hanging the machine from a nail or screw on the wall.

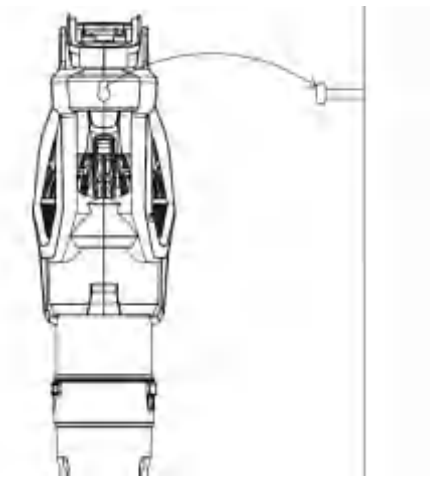

TROUBLE SHOOTING

Use this section to help you to try and solve any problems you may have:

PROBLEM	POSSIBLE CAUSE	CORRECTIVE ACTION
Motor does not run.	Battery cartridge is not installed.	Install the battery cartridge.
	The drive system does not work correctly.	Recharge the battery. If recharging is not effective, replace battery.
	The drive system does not work correctly.	Ask your local authorized service center for repair.
Motor stops running after a little use.	Battery's charge level is low.	Recharge the battery.If recharging is not effective, replace battery.
	Overheating.	Stop using the machine to allow it to cool down.
The machine does not reach the maximum speed.	Battery is installed improperly.	Install the battery pack as described in this manual.
	Battery power is dropping.	Recharge the battery. If recharging is not effective, replace battery.
	The drive system does not work correctly.	Ask your local authorized service center for repair.
Abnormal vibration: Stop the machine immediately!	The drive system does not work correctly.	Ask your local authorized service center for repair.
Motor cannot stop: Remove the battery immediately!	Electric or electronic malfunction.	Remove the battery and ask your local authorized service center for repair.

NOTE: IF YOU EXPERIENCE A PROBLEM WITH YOUR TOOL, PLEASE DO NOT ATTEMPT TO OPEN OR REPAIR THE TOOL YOURSELF. DOING SO MAY VOID THE WARRANTY ANDI COULD CAUSE DAMAGE OR PERSONAL INJURY. IF THE PROBLEM STILL PERSISTS, PLEASE CONTACT US BY REFERRING TO THE SERVICE & SUPPORT INFORMATION ON THE FOLLOWING PAGE.

ENVIRONMENTAL INFORMATION



The symbol on the product or its packaging indicates that this product must not be disposed of with your other household waste. Instead, it is your responsibility to dispose of your waste equipment by handing it over to a designated collection point for the recycling of waste electrical and electronic equipment. The separate collection and recycling of your waste equipment at the time of disposal will help conserve natural resources and ensure that it is recycled in a manner that protects human health and the environment. For more information about where you can drop off your waste for recycling, please contact your local authority, or where you purchased your product.