SHARP®

OPERATION MANUAL

# 30" FREESTANDING ELECTRIC RANGE

MODEL : SFR3075MS

30" Freestanding Electric Range: Model SFR3075MS

**WARNING:**

a) A child or adult can tip the range and be killed.
b) Verify the anti-tip device has been properly installed and engaged. See page 6.
c) Ensure the anti-tip device is re-engaged when the range is moved. See page 6.
d) Do not operate the range without the anti-tip device in place and engaged.
e) Failure to do so can result in death or serious burns to children or adults.

# CONTENTS


**CUSTOMER ASSISTANCE** ..... **4**

**US CONSUMER LIMITED WARRANTY** ..... **5**

**SAFETY PRECAUTIONS** ..... **6**

GROUNDING THE APPLIANCE ..... 6
ANTI-TIP BRACKET ..... 6

**IMPORTANT SAFETY INSTRUCTIONS** ..... **7-9**

INSTALLATION AND MAINTENANCE ..... 7
GENERAL SAFETY PRECAUTIONS ..... 7
COOKTOP SAFETY ..... 8
OVEN SAFETY ..... 8
SELF CLEAN HAZARDS ..... 9
ABOUT FOOD SAFETY ..... 9

**PARTS AND FEATURES** ..... **10-14**

TOP VIEW ..... 10
FRONT VIEW ..... 10
INCLUDED ACCESSORIES ..... 11
COOKTOP ..... 12
CONTROL KEYPAD AND DISPLAY ..... 12
SETTINGS ..... 13
CONTROL LOCK ..... 13
TIMER ..... 13
OVEN LIGHT ..... 13
SABBATH MODE ..... 14

**BEFORE OPERATING** ..... **15**

BEFORE FIRST USE ..... 15
SET THE CLOCK ..... 15
CONDITION OF THE UNIT ..... 15
SERVICE AND REPAIR WARNING ..... 15
PRODUCT DISPOSAL ..... 15

**COOKTOP USE** ..... **16-18**

ABOUT THE RANGETOP ..... 16
ABOUT COOKTOP UTENSILS ..... 16
ACCEPTABLE COOKTOP UTENSILS ..... 17
ABOUT COOKWARE PLACEMENT ..... 17
RADIANT SURFACE UNITS ..... 18
SINGLE HEATER BURNERS ..... 18
DOUBLE HEATER BURNER ..... 18
WARMING ZONE ..... 18

**OVEN USE** ..... **19-24**

ABOUT OVEN COOKING ..... 19
OVEN RACKS ..... 19
COMPONENT COOLING FAN ..... 20
OVEN DOOR ..... 20
OVEN VENTS ..... 20
OVEN CONDENSATION AND TEMPERATURE ..... 20
COOKING WITH CONVECTION ..... 21
ADVANTAGES OF CONVECTION COOKING ..... 21
OVEN OPERATION SYMBOLS ..... 21
PREHEAT ..... 22
BAKE ..... 22
BROIL HI/LOW ..... 22
PIZZA ..... 22
AIR-FRY ..... 22
CONVECTION BAKE ..... 23
CONVECTION ROAST ..... 23
KEEP WARM ..... 23
PROOF ..... 23
STEAM CLEAN ..... 23
SELF CLEAN ..... 24
DELAY ..... 24
COOK TIME ..... 24

**CLEANING AND MAINTENANCE** ..... **25-27**

COOKTOP CLEANING ..... 25
DAILY USE CLEANING ..... 25
BAD SPILLS ..... 25
METAL MARKS ..... 25
DAMAGED COOKTOP ..... 25
MAINTAINING STAINLESS-STEEL ..... 26
CONTROL PANEL CLEANING ..... 26
OVEN INTERIOR CLEANING ..... 26
OVEN LIGHTS ..... 26
DRAWER AND DOOR ..... 27

**TROUBLESHOOTING** ..... **28-29**

BEFORE YOU CALL ..... 28

**ERROR CODES** ..... **30**

# CUSTOMER ASSISTANCE

UNITED STATES ONLY

## REGISTER YOUR PRODUCT

Registering your new product is easy and offers benefits that help you get the most out of your Sharp product including:

- ✓ **Convenience**: If you ever need warranty support, your product information is already on file.
- ✓ **Communication**: Stay up to date with important notifications and special offers from SHARP.
- ✓ **Support**: Quickly access support content including Owner's Manuals, FAQ's, How-to Videos, and much more.

### 3 EASY WAYS TO REGISTER TODAY!

**SCAN**
Use the camera or QR code scanning application on your mobile device

**Scan this QR Code on your mobile device**

**ONLINE**
Visit our sites to learn more about your product at sharpusa.com and sbl.sharpusa.com

**Visit http://www.sharpusa.com/register**

**CALL US**
**US** **800-BE-SHARP**
800-237-4277

**Contact a Sharp Advisor on the phone**

## PRODUCT SUPPORT

If you have questions about the setup or operation of your product, please refer to the corresponding section within this manual.

Additionally, visit https://support.sharpusa.com/s/ to access exclusive content about your product including:

→ FAQ's and How-To Videos
→ Find or Request Service
→ Extended Warranty Options
→ Downloads including the Installation Guide, Spec Sheet, and Owner's Manual

## CONTACT US

If at any time you have questions or comments concerning your SHARP product, please contact the SHARP Customer Assistance Center. We are available to assist you through multiple contact methods for your convenience:

**EMAIL**
Available 24/7
US: sharpusa.com

**See the Contact Us section on our sites**

**CHAT ONLINE**

**U.S. | https://support.sharpusa.com/s/**

**CALL US**
**US** **800-BE-SHARP**
800-237-4277

**Contact a Sharp Advisor on the phone**

SHARP®

# US CONSUMER LIMITED WARRANTY

SHARP ELECTRONICS CORPORATION ("Sharp") warrants to the first consumer purchaser ("Purchaser") that this SHARP brand product ("Product"), when shipped in its original container and sold or distributed in the United States by Sharp or an authorized Sharp dealer or reseller, will be free from defective workmanship and materials, and agrees that it will, at its option, either repair the defect or replace the defective Product or part thereof with a new or remanufactured equivalent at no charge to the Purchaser for parts or labor for the period(s) set forth below.

This limited warranty does not apply to any appearance items of the Product nor to the additional excluded item(s) set forth below nor to any Product the exterior of which has been damaged or defaced, which has been subjected to misuse, abnormal service or handling, or which has been altered or modified in design or construction.

In order to enforce the rights under this limited warranty, the Purchaser should follow the steps set forth below and provide proof of purchase to the servicer.

The limited warranty described herein is in addition to whatever implied warranties may be granted to Purchasers by law. ALL IMPLIED WARRANTIES INCLUDING THE WARRANTIES OF MERCHANTABILITY AND FITNESS FOR USE ARE LIMITED TO THE PERIOD(S) FROM THE DATE OF PURCHASE SET FORTH BELOW. Some states do not allow limitations on how long an implied warranty lasts, so the above limitation may not apply to you.

Neither the sales personnel of the seller nor any other person is authorized to make any warranties other than those described herein, or to extend the duration of any warranties beyond the time period described above on behalf of Sharp.

The warranties described herein shall be the sole and exclusive warranties granted by Sharp and shall be the sole and exclusive remedy available to the Purchaser. Correction of defects, in the manner and for the period of time described herein, shall constitute complete fulfillment of all liabilities and responsibilities of Sharp to the Purchaser with respect to the Product, and shall constitute full satisfaction of all claims, whether based on contract, negligence, strict liability or otherwise. In no event shall Sharp be liable, or in any way responsible, for any damages or defects in the Product which were caused by repairs or attempted repairs performed by anyone other than an authorized servicer. Nor shall Sharp be liable or in any way responsible for any incident or consequential economic or property damage. Some states do not allow the exclusion of incidental or consequential damages, so the above exclusion may not apply to you.

THIS LIMITED WARRANTY IS VALID ONLY IN THE FIFTY (50) UNITED STATES, THE DISTRICT OF COLUMBIA AND PUERTO RICO.

| | |
|---|---|
| **Your product model number & description** | Model # SFR3075MS or 30" Freestanding Electric Range.<br>(Be sure to have this information available when you need service for your Product.) |
| **Warranty period for this product:** | One (1) year parts and labor including in-home service.<br>Product must be accessible to provide service. |
| **Additional item(s) excluded from warranty coverage (if any):** | Non-functional accessories, service calls to your home to instruct how to use your Freestanding Electric Range, replace or repair house fuses or to correct house wiring, improper commercial use, installation, or maintenance, damage to the product caused by delivery, accident, modifications, fire, floods or acts of God. |
| **Where to obtain service:** | From a Sharp Authorized Servicer located in the United States. To find the location of the nearest Sharp Authorized Servicer, call Sharp toll free at 1-800-237-4277 (1-800-BE-SHARP). |
| **What to do to obtain service:** | In-home service is provided for one year from date of purchase. In-home service can be arranged by calling 1-800-BE-SHARP. Be sure to have Proof of Purchase available. |

TO OBTAIN SUPPLY, ACCESSORY OR PRODUCT INFORMATION, CALL 1-800-BE-SHARP or visit www.sharpusa.com. SAVE THE PROOF OF PURCHASE AS IT IS NEEDED SHOULD YOUR APPLIANCE EVER REQUIRE WARRANTY SERVICE.

# SAFETY PRECAUTIONS

**IMPORTANT:** Read all instructions carefully before installation and operation. Keep this Operation Manual for future use. Sharp Freestanding Electric Range is manufactured in compliance with the relevant safety standard.

**⚠ WARNING** Failure to follow these warnings could result in a fire or explosion causing property damage, personal injury or death. To reduce the risk of fire, electric shock or injury, use only as intended and take the following precautions.

## GROUNDING THE APPLIANCE

This unit must be supplied with the proper voltage and frequency and connected to an individual, properly grounded branch circuit, protected by a circuit breaker or fuse having amperage as noted on the rating plate.

A 3-wire or 4-wire, split-phase AC 208Y/120 Volt or 240/120 Volt, 60 hertz electrical system must be used.

**NOTE:** Check local codes for required breaker size. All electrical wiring and hookup for this unit must be done by a qualified electrician. Make note of the location of the main appliance disconnect.

**⚠ WARNING SHOCK HAZARD**

- Improper use of the grounding plug can cause risk of electric shock. Do not use an extension cord. If the power supply cord is too short, have a qualified electrician or service technician install an outlet near the appliance.

If you have any questions about the grounding or electrical instructions, consult a qualified electrician or service technician.

## ANTI-TIP BRACKET

**⚠ WARNING TIP-OVER HAZARD**

- If the Anti-Tip Bracket is not installed, there is risk of the product tipping and causing injury if someone stands, sits or leans on the open door.
- To reduce the risk of tipping of this appliance from abnormal usage by excessive loading of the oven, the appliance must be secured by installing the Anti-Tip Bracket supplied. Please refer to the Installation Manual for more information.

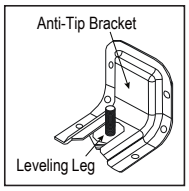


To check if the bracket is installed and engaged properly, open the oven door fully and gently apply medium force in the center of the handle until movement of the appliance is detected. Continue pressing until the Anti-Tip Bracket is engaged and movement stops.

A small amount of movement is acceptable at the back of the appliance top, but it should be stable and not tip once the Anti-Tip Bracket is engaged. Stop pressing on the door and close the oven.

To check if the unit will not slide out, open the oven fully and apply gentle outward pressure. The unit should not slide toward you. If it does, refer to the Installation Manual.

READ AND SAVE THESE INSTRUCTIONS
FOR FUTURE REFERENCE

To reduce the risk of fire, electrical shock, injury to persons or damage when using the product, follow basic precautions, including the following.

## INSTALLATION AND MAINTENANCE

1 This appliance must be properly installed and electrically grounded by a qualified technician. Refer to the Installation Manual for instructions to connect to a properly grounded outlet.

2 This appliance should be serviced only by a qualified service technician. Contact the nearest authorized service center for examination, repair or adjustment.

3 Do not repair or replace any part of the oven yourself unless specifically recommended. Refer service to an authorized servicer.

4 Do not operate this appliance if it is not working properly or has been damaged until an authorized servicer has examined and repaired it.

5 Install or locate this appliance only in accordance with the Installation Manual. Do not store or use this appliance outdoors or in areas near water, such as near a kitchen sink, in a wet basement, near a swimming pool or similar locations.

6 Use this appliance only for its intended use as described in this manual. Do not use corrosive chemicals, vapors or nonfood products in this appliance. This type of oven is specifically designed to heat or cook. It is not designed for industrial or laboratory use. The use of corrosive chemicals in heating or cleaning will damage the appliance.

7 Do not allow grease or other flammable materials to accumulate in or on the range, as grease in the oven or on the cooktop may ignite.

8 Clean kitchen ventilating hoods frequently. Do not allow grease to accumulate on hood or filter.

9 Clean the cooktop with caution. To avoid steam burns, allow the cooktop to cool before wiping with wet sponge or cloth. Some cleaners produce noxious fumes if applied to a hot surface.

10 Do not use oven cleaners or protective coating on any part of this appliance.

11 Take care to not rub, damage or move the door gasket, which seals the connection between the door and the oven. Do not clean the door gasket.

12 Clean only parts and areas listed in the CLEANING AND MAINTENANCE section of this manual.

13 Do not use water on grease fires – Smother fire or flame or use dry chemical or foamtype extinguisher.

## GENERAL SAFETY PRECAUTIONS

1 Read all instructions before using the appliance.

2 To prevent accidents and achieve optimal ventilation, ensure sufficient space around the cooking area.

3 Do not store any flammable materials or temperature sensitive items inside oven or storage drawer or on top of or near cooktop, including paper, plastic, potholders, linens, wall coverings, curtains, drapes or cleaning chemicals.

4 Do not use this appliance to warm or heat a room, as doing so may cause risk of overheating of the oven.

5 Children should not be left alone or unattended in the area of Freestanding Electric Range use. Do not allow children to play in, on or otherwise interact with the range.

6 Do not allow anyone to climb, stand, lean, sit or hang on any part of the appliance, especially the door, drawer or operation panel.

7 Do not store items of interest to children or pets in cabinets above or in the backguard of the range, as children or pets climbing on the range to reach items could be seriously injured or cause unintentional operation.

8 Close supervision is necessary when children interact with the Freestanding Electric Range. Teach children to not play with the knobs, controls or any other part of the appliance.

9 Never wear loose-fitting or hanging garments while using the appliance. Be careful when reaching for items stored over the appliance. Flammable material could be ignited and cause severe burns.

10 For personal safety, tie long hair back while using this appliance.

11 Use only dry potholders. Moist or damp potholders on hot surfaces may cause burns from steam. Do not use towels or other bulky cloth.

12 Always place oven racks in desired position while the oven is cool. If rack must be moved while the oven is hot, do not let potholders contact hot heating element in the oven.

13 Keep hands and face clear when opening the oven door. Let hot air or steam escape before removing or replacing food, as hot air and steam can cause burns.

14 Use caution when opening and closing the oven door. The trim on the top and sides of the oven door may become hot enough to cause burns.

15 The Freestanding Electric Range has not been evaluated for use with any 3rd party aftermarket systems. Do not attempt to use this appliance with a wok ring or any other after-market device that may block air to the burner or otherwise cause a fire hazard.

# IMPORTANT SAFETY INSTRUCTIONS

## COOKTOP SAFETY

**⚠ WARNING** When using electrical appliances, take safety precautions to reduce the risk of burns, electric shock, fire, injury to persons or property damage, including the following:

1 Do not touch surface burners or areas near burners. Surface burners may be hot even though burners are not glowing. Areas near surface burners may become hot enough to cause burns. During and after use, do not touch or allow clothing or other flammable materials to contact surface burners or areas near burners until sufficiently cooled.

2 Use proper pan size. This cooktop has surface burners of varied sizes. Select utensils with flat bottoms large enough to cover the surface burner's heating element.

Undersized utensils expose a portion of heating element to direct contact and may result in risk of burns or ignition of clothing. Proper relationship of utensils to heating element also improves efficiency.

| CORRECT PLACEMENT | INCORRECT PLACEMENT |
|---|---|
| 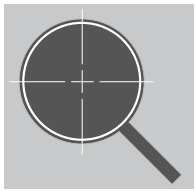 | |

3 Never leave burners unattended at high heat settings. Boil-overs cause smoking and greasy spills that may ignite.

4 Only certain types of glass, glass-ceramic, ceramic, earthenware or other glazed utensils are suitable for cooktop use. Unsuitable materials may break due to sudden change in temperature.

5 Position utensils with handles turned inward and not extended over adjacent burners to reduce the risk of burns, ignition of flammable materials and spillage due to unintentional contact with utensils.

6 Do not use the appliance if the cooktop is broken. If the cooktop breaks, cleaning solutions and spills may penetrate the broken cooktop and create a risk of electric shock. Contact a qualified technician immediately.

7 Clean the cooktop with caution. Be careful to avoid steam burns if cleaning the cooktop with a wet sponge or cloth. Some cleaners can produce noxious fumes if applied to a hot surface. See page 25 for cooktop cleaning instructions.

8 Clean ventilating hoods frequently. Do not allow grease to accumulate on hood or filter.

9 Always turn on the hood when cooking at high heat or when flambéing food.

10 Carefully monitor foods being fried at high or medium-high heat settings. Use extreme caution when moving a grease kettle or disposing of hot grease after deep frying fat.

11 Food for frying should be as dry as possible. Frost on frozen foods or moisture on fresh foods can cause hot fat to bubble up and over the sides of the pan.

12 Use little fat for effective shallow or deep fat frying. Overfilling a pan with fat can cause spillovers when food is added.

13 Always heat fat slowly and monitor as it heats. If a combination of oils or fats will be used in frying, stir them slowly before heating or as fats melt.

14 Use a deep fat thermometer whenever possible to prevent heating fat beyond the smoking point.

15 Do not store heavy items above the cooktop. They could fall and break the glass.

16 Avoid scratching the glass-ceramic cooktop. The cooktop can be scratched by items such as sharp instruments, rings or other jewelry and rivets on clothing. Large scratches or impacts to glass door or cooktop can lead to broken or shattered glass.

17 Never use the glass-ceramic cooktop surface as cutting board.

18 Do not place or store items that can melt or catch fire on the cooktop, even when it is not in use.

19 Spoons or other stirring utensils placed on cooktop surface when in use may become hot and could cause burns.

20 Always turn off the burners before removing cookware.

## OVEN SAFETY

1 DO NOT TOUCH HEATING ELEMENTS OR INTERIOR SURFACES OF OVEN.
Oven burners and surfaces may be hot even though burners are not glowing. Interior surfaces of an oven become hot enough to cause burns. During and after use, do not touch or allow clothing or other flammable materials to contact oven burners or interior surfaces until sufficiently cooled. Other surfaces, such as vent openings, surfaces near vent openings, the oven door and the door window, also may become hot enough to cause burns.

2 If materials inside the oven ignite, keep the door closed, turn off any oven operation and disconnect power at the fuse or breaker box. Wait for the fire to extinguish and allow the oven to cool before removing contents, cleaning the oven and restoring power.

3 Never place anything, such as aluminum foil, spill mat, baking stone, cookware, etc., on the bottom of the oven cavity, as these items can trap heat or melt. This may cause damage to the appliance and risk of electric shock, smoke or fire.

4 Do not heat unopened food containers, as build-up of pressure may cause the container to burst and cause injury.

5 Do not use a broiler pan without its insert. Do not cover the broiler pan insert with aluminum foil, as exposed fat and grease could ignite.

6 Do not obstruct oven vents or any other slots or openings on the unit.

7 During oven operation, upper interior surfaces of the storage drawer may become very hot. Do not touch interior surfaces of the storage drawer until the oven has sufficiently cooled. Do not store flammable materials or temperature sensitive items in the storage drawer at any time.

## SELF CLEAN HAZARDS

1. Before starting Self Clean, ensure the oven is empty. Remove broiler pan, racks, cookware and any other materials.
2. Before starting Self Clean, to avoid ignition, remove excess grease or food from inside the oven.
3. The door locks several minutes after the start of Self Clean. If the door is opened before it locks, Self Clean is canceled. If the door does not lock within 15 minutes, cancel Self Clean and contact an authorized servicer for repair.
4. During Self Clean, do not use the rangetop. It is not safe to operate any part of the appliance during a Self Clean cycle.
5. If the appliance malfunctions in Self Clean, keep door closed, turn off appliance, disconnect power at the fuse or breaker box and contact an authorized servicer for repair.
6. If materials inside the oven ignite, turn off appliance, disconnect power at the fuse or breaker box and wait for the fire to extinguish. Do not force the door open. Wait for the oven to cool before manually cleaning oven.
7. Some birds are extremely sensitive to the fumes produced during a Self Clean cycle. Move caged pet birds outside or to another well-ventilated room until process is complete and the home is completely aired out.

## ABOUT FOOD SAFETY

Cook foods to safe temperatures recommended by the United States Department of Agriculture (USDA). To check internal temperature of foods to determine doneness, insert a temperature probe in a thick or dense area away from fat or bone.

Do not let food sit in the oven more than one hour before or after cooking. Doing so can result in food poisoning or sickness.

## USDA RECOMMENDED TEMPERATURE

| FOOD | MINIMUM INTERNAL TEMPERATURE |
|---|---|
| beef, pork, veal and lamb steaks, chops and roasts | 145 °F and allow to rest for at least 3 minutes |
| ground meats | 160 °F |
| ground poultry | 165 °F |
| ham, fresh or smoked (uncooked) | 145 °F and allow to rest for at least 3 minutes |
| ham (fully cooked, to reheat) | 165 °F |
| poultry breasts, whole bird, legs, thighs, wings, giblets and stuffing | 165 °F |
| eggs | 160 °F |
| fish and shellfish | 145 °F |
| leftovers | 165 °F |
| casseroles | 165 °F |

**NOTE**:

- ALWAYS use potholders to prevent burns when handling utensils in contact with hot food. Heat from the food can transfer through utensils to cause skin burns.
- Avoid steam burns by directing steam away from the face and hands. Slowly lift the farthest edge of a dish covering and carefully open cooking bags and popcorn bags away from the face.
- Stay near the appliance when it is in use and check progress frequently to avoid overcooking food.
- NEVER use the appliance for storing cookbooks or other items.
- Select, store and handle food carefully to preserve its high quality and minimize the spread of foodborne bacteria.

# READ AND SAVE THESE INSTRUCTIONS FOR FUTURE REFERENCE

# PARTS AND FEATURES

## TOP VIEW

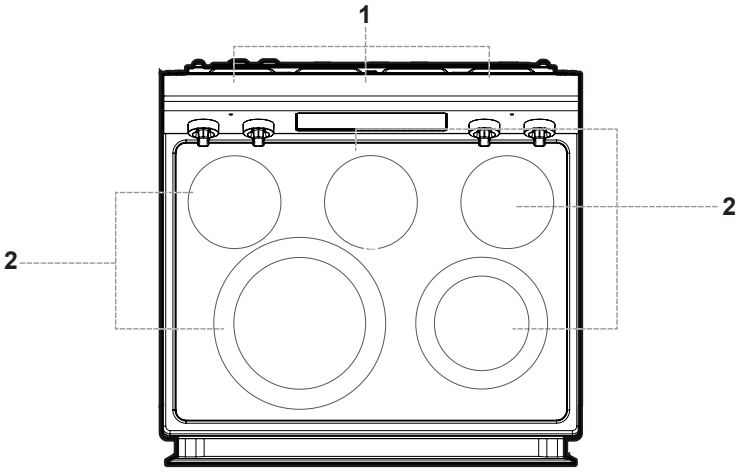


## FRONT VIEW

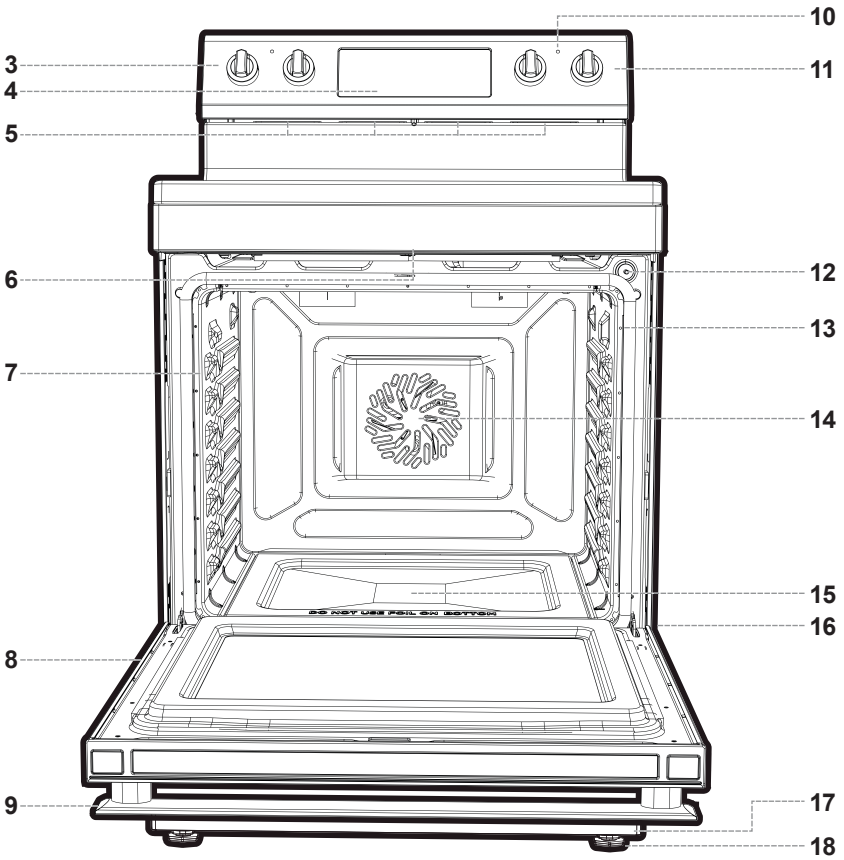


| | | |
|---|---|---|
| **1** Cooling Vents | **7** Rack Positions | **13** Door Gasket |
| **2** Cooktop Burners | **8** Door | **14** Convection Fan |
| **3** Cooktop Control Knobs | **9** Door Handle | **15** Oven Bottom |
| **4** Control Keypad and Display | **10** Hot Surface Indicator | **16** Door Hinge |
| **5** Oven Vent | **11** Control Panel | **17** Storage Drawer |
| **6** Broil Burner | **12** Door Switch | **18** Leveling Legs |

## INCLUDED ACCESSORIES

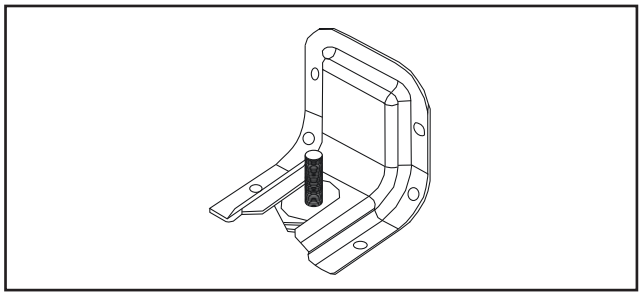

Anti-Tip Bracket (1 bracket, 2 screws, 1 template)

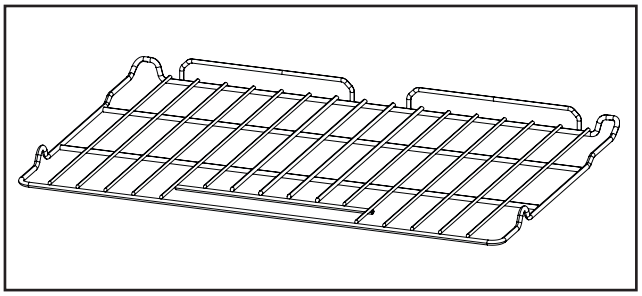

Flat Racks (2)

# PARTS AND FEATURES

## GLASS-CERAMIC COOKTOP SURFACE

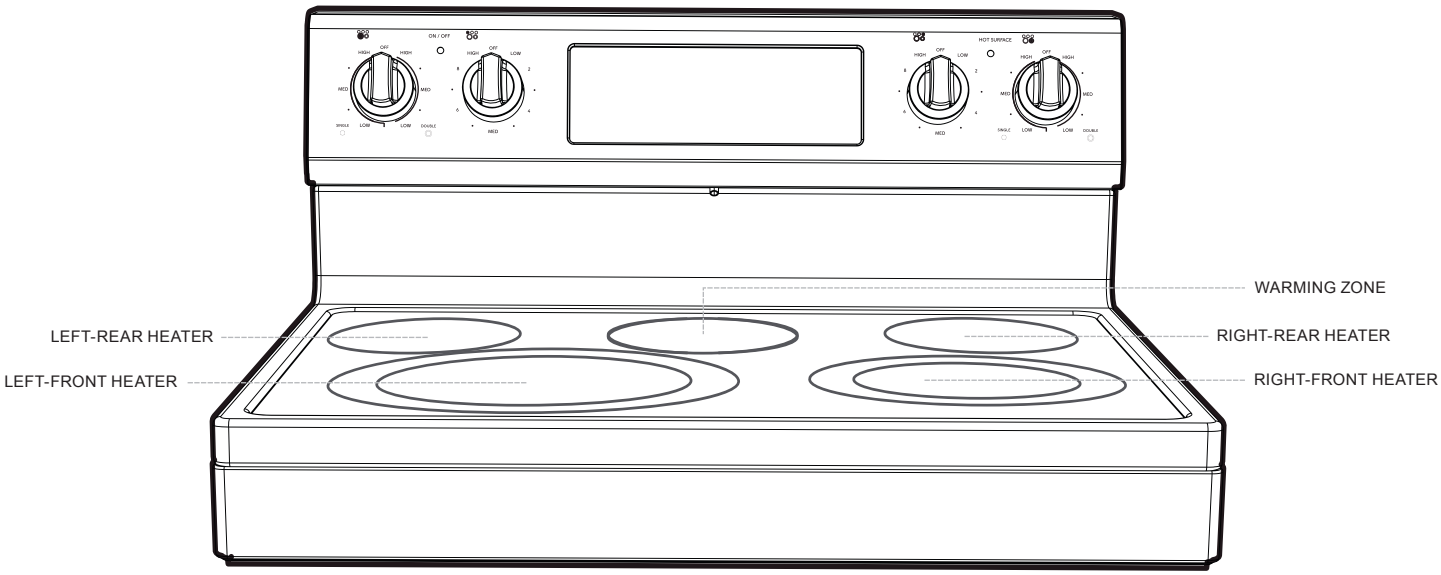


## CONTROL KEYPAD AND DISPLAY

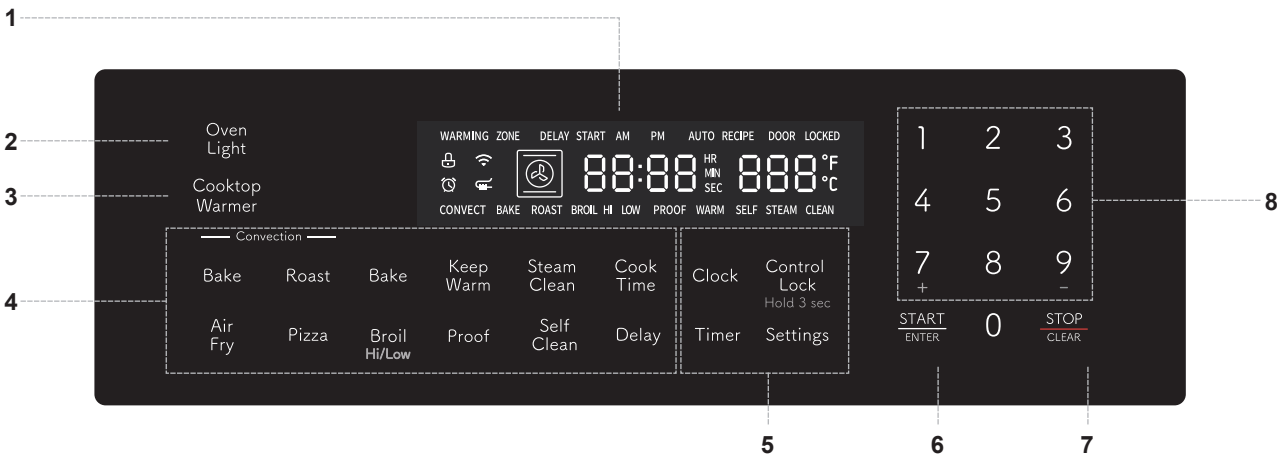


1 **Display**: communicates information, including time-of-day, oven temperature and cooking mode

2 **Oven Light pad**: controls interior oven light

3 **Cooktop Warmer Pad:** controls cooktop warming zone

4 **Oven Operations**: available operating modes

5 **Auxiliary Features**: useful features not associated with oven operation, such as Timer, Control Lock and Settings

6 **START/ENTER pad**: initiates the selected oven operation or selects an available option

7 **STOP/CLEAR pad**: immediately halts any oven operation

8 **Numeric Input pads**: used to enter desired oven temperature, set the clock, change settings or input other information

## SETTINGS

Navigate through the Settings menu to customize the appliance. Settings can only be adjusted when no other oven operation is in progress.

### TO SCROLL THROUGH SETTINGS

1 Touch **Settings** pad on the control panel. The first menu option *VoL* appears in flashing letters and the current setting appears in solid letters.

2 Use the **7+** pad to scroll through the menu. Use the **9-** pad to scroll backwards through the menu.

3 Touch **START/ENTER** pad to select a menu item.

4 Touch **7+** and **9-** pads to toggle through the setting options.

5 Touch **START/ENTER** pad to accept changes. Touch **Settings** pad or **STOP/CLEAR** pad to reject changes.

6 Touch **STOP/CLEAR** pad to exit Settings menu.

### SETTINGS MENU

| SETTING | DISPLAY | OPTIONS | DESCRIPTION |
|---|---|---|---|
| Volume | *VoL* | 1 or 2 | The audible feedback of the control panel is programmed by default at maximum volume. Use this setting option to reduce the volume. |
| Display Brightness | *dISP* | 1, 2 or 3 | The display is programmed by default at maximum brightness. Use this setting option to reduce the brightness of the display. |
| Hold after Cook | *hold* | OFF or ON | When a timed bake function completes, by default the oven turns off. Use this setting option to program the oven to switch to Keep Warm mode. |
| Sabbath Mode | *SAbE* | OFF or ON | Use this setting to program the appliance into an operating mode compliant with the standards required for use during Sabbath. |
| Degree Units | *dEG* | F or C | The oven is programmed by default to use degrees Fahrenheit, but it can be changed to operate in degrees Celsius. |
| Oven Calibration | *CAL* | + or - 25 ° | If the oven temperature is higher or lower than expected based on outcomes of familiar recipes, use this setting to offset the oven's target temperature. Calibration can be offset between -25 °F and +25 °F. Default calibration offset is zero. |
| Sales (Demo) Mode | *SALE* | OFF or ON | In Sales mode, or Demo mode, controls function as normal, but no cooking mode is initiated, and heat is not produced. This setting is intended for use by retailers. By default, Sales mode is off. |

## CONTROL LOCK

The Control Lock function disables all pads on the control panel to prevent accidental operation of the oven, such as by pets, children or while cleaning. The **STOP/CLEAR** pad is never disabled. Control Lock can be used after the start of a baking mode.

### TO USE CONTROL LOCK

1 Touch and hold **Control Lock** pad for three seconds to activate Control Lock.

2 Touch and hold **Control Lock** pad for three seconds to deactivate Control Lock.

## TIMER

This appliance includes a built-in kitchen timer.

### TO SET THE TIMER

1 Touch **Timer** pad. *00:00* appears on the display.

2 Enter time in hours and minutes (hh:mm) and touch **START/ENTER** pad. The clock begins to count down.

3 When the set time has passed and the clock reaches *00:00*, an audible alert sounds to signal the time is complete.

4 Touch **Timer** pad to clear the signal or exit Timer early.

## OVEN LIGHT

Touch **Oven Light** pad to turn the oven light on or off. See page 26 for bulb replacement instructions.

## SABBATH MODE

When in Sabbath mode, the oven operation may be controlled as described below, however audible signals will not sound, the clock is disabled, oven lights are disabled and changes to the display may be delayed from 30 to 60 seconds. There is no need to remove oven light bulbs during Sabbath mode. The oven will be allowed to operate indefinitely until Sabbath mode is exited, overriding the factory 12-hour default maximum continuous oven operation.

### TO SET SABBATH MODE

1 Touch **Settings** pad.

2 Use the **7+** pad to scroll through the menu until *SAbE* appears on the display.

3 Touch **START/ENTER** pad to select the Sabbath mode.

4 By default, this setting is OFF. Touch **7+** and **9-** pads to toggle between ON and OFF.

5 Touch **START/ENTER** pad to turn on Sabbath mode. A single ] bracket appears on the display, indicating Sabbath mode is active.

During Sabbath mode, the function of touchpads on the control panel are modified as shown below.

| FUNCTION DURING SABBATH MODE | | |
|---|---|---|
| 1 | 2 | 3 |
| Bake 200 ˚F | Bake 250 ˚F | Bake 300 ˚F |
| 4 | 5 | 6 |
| Bake 350 ˚F | Bake 400 ˚F | 90 minutes |
| 7 | 8 | 9 |
| 2 hours | 3 hours | 4 hours |
| | 0 | |
| | 5 hours | |

### TO CONTROL OVEN IN SABBATH MODE

1 For continuous baking operation, touch the pad corresponding to the desired oven temperature. Touch **START/ENTER** pad.

2 For timed baking operation, touch the pad corresponding to the desired oven temperature, then touch the pad corresponding to the operating time. Touch **START/ENTER** pad.

3 After **START/ENTER** pad is touched, a random delay between 30 and 60 seconds elapses and a second bracket ] [ appears on the display, indicating the oven is baking.

4 Temperature can be adjusted at any time. To adjust the oven temperature, touch the pad corresponding to the desired oven temperature, then touch **START/ENTER** pad.

5 Touch **STOP/CLEAR** pad to cancel any baking operation in progress. A random delay between 30 and 60 seconds elapses, and a single bracket ] appears on the display.

### TO EXIT SABBATH MODE

1 Quickly touch **Settings** pad three times to reopen the Settings menu.

2 Use the **7+** pad to scroll through the menu until *SAbE* appears on the display.

3 Touch **START/ENTER** pad to select the Sabbath mode.

4 Touch **7+** pad to toggle between ON and OFF.

5 When *OFF* appears on the display, touch **START/ENTER** pad to turn off Sabbath mode.

**NOTE**: If a power outage occurs while the appliance is in Sabbath mode, when power returns, the appliance will still be in Sabbath mode, but baking operations will not resume and will have to be reset.

## HOLD TO KEEP WARM SETTING

The Hold to Keep Warm setting is designed to keep cooked foods hot. When this setting is activated, the oven will remain on at a lower temperature after cooking time has completed to keep food at a suitable temperature for eating. For best results, do not leave food in the oven for longer than 2 hours on Hold.

**⚠WARNING FOODBORNE ILLNESS HAZARD**

- Bacteria may grow in food at temperatures below 140 °F. This mode is designed to keep cooked foods warm, not heat cold foods.

### TO SET HOLD TO KEEP WARM MODE

1 Touch **Settings** pad.

2 Use the **7+** pad to scroll through the menu until *hold* appears on the display.

3 Touch **START/ENTER** pad to select the Hold setting.

4 By default, this setting is OFF. Touch **7+** and **9-** pads to toggle between ON and OFF.

5 Touch **START/ENTER** pad to accept changes. Touch **STOP/CLEAR** pad to exit Settings menu.

## BEFORE FIRST USE

1 Remove all packaging, literature, removable labels and protective plastic from the appliance. Check inside the oven, inside the drawer and around the door and trim edges carefully.

2 Ensure the appliance is properly installed and connected to power according to all instructions in the included Installation Manual.

3 Wipe all surfaces, including inside oven and drawer, with a damp, soft cloth to remove any dust that may have settled during shipping and storage.

4 Read and understand this manual and familiarize yourself with the controls and features described.

5 Confirm cooktop burners and oven operate as intended. Contact Sharp customer support immediately if the appliance does not work as expected.

6 Ventilate the kitchen, then touch **Bake** pad, adjust the temperature to 450 °F and touch **START/ENTER** pad. Allow the oven to heat for 1 hour to remove any dust or impurities in the cavity. During this initial operation, an odor is normal.

## SET THE CLOCK

1 Touch **Clock** pad on the control panel.

2 Enter the time of day using the numeric keypad and touch **Clock** pad to toggle between AM and PM.

3 Touch **START/ENTER** pad to accept the displayed time. Touch **STOP/CLEAR** pad to reset.

## CONDITION OF THE UNIT

Check the appliance for any damage. If there is any damage, do not operate the appliance and contact your dealer or a Sharp Authorized Servicer. Return the appliance to the nearest authorized service facility for examination, repair or adjustment. Call 1-800-BE-SHARP for support.

## SERVICE AND REPAIR WARNING

Do not repair or replace any part of the Sharp Freestanding Electric Range. If the display, heaters or touch controls fail, consult a Sharp Authorized Servicer.

## PRODUCT DISPOSAL

This product may not be treated as household waste. To dispose of the appliance, deliver it to an applicable collection point for the recycling of electrical and electronic equipment. Dispose of this product correctly to prevent negative consequences for the environment and human health, which could otherwise be caused by inappropriate waste handling of this product. For more detailed information about recycling of this product, please contact your local city office, your household waste disposal service or the shop where you purchased the product.

# COOKTOP USE

## ABOUT THE RANGETOP

**⚠ WARNING FIRE HAZARD**

• DO NOT USE WATER ON GREASE FIRES. Smother fire or flame with a closefitting lid or metal tray. Never pick up a flaming pan.

• Never leave cooktop heating elements unattended. Boil-over causes smoking and greasy spillovers that may ignite. Turn off all controls when done cooking.

### GLASS-CERAMIC SURFACE

Ensure the cooktop surface and the pan bottom are clean before heating. Do not use the cooktop if the surface is broken or if metal has melted on it.

### RADIANT HEATERS

The radiant heaters are below the smooth glass-ceramic cooktop. The design on the cooktop outlines the area of the heater unit below. The cooktop surface may be hot even if the burner does not appear to glow red.

**⚠ WARNING** The areas surrounding the heaters may become hot enough to cause burns.

### HOT SURFACE INDICATOR

The Hot Surface Indicator illuminates when any unit heater is on or still hot. This Indicator is located on the back panel and has two lights, one for each side of the cooktop. This will indicate if either unit heater on the left or right side is on or still hot.

**⚠ WARNING** In the event of a power failure to the home or to the appliance, cooktop surfaces may still be hot even though the Hot Surface Indicator light is off. Indicators do not automatically illuminate once power has been restored.

### TEMPERATURE LIMITER

To protect the glass-ceramic cooktop from damage, the radiant heaters have a Temperature Limiter that allows the unit to cycle on and off, even at high settings. Cycling can occur at the high settings when improper cookware is used on the cooktop.

**⚠ WARNING** The hot surface of the cooktop may ignite flammable items, melt or soften plastics or cause risk of eruption of closed containers due to increased pressure. Never leave any items on the cooktop surface.

**NOTE:**

- Never store heavy items above the rangetop, as they can cause damage if dropped onto the surface.
- Never cook food directly on the cooktop. Always use proper cookware.
- Never touch hot cookware directly with your hands. Always use oven mitts or potholders when handling hot cookware to protect hands and arms from burns.

**IMPORTANT:** Improper use of cookware can cause damage to the cooktop surface not covered under warranty.

- Do not slide cookware across the cooktop surface, as it can scratch the glass and may leave marks that need to be removed promptly.
- Do not leave empty utensils on hot cooktop surfaces.
- Never allow a pan to boil dry, as it could damage the pan and the cooktop.
- Do not use aluminum foil on the cooktop surface.
- Do not use the cooktop as a cutting board.

## ABOUT COOKTOP UTENSILS

### BOTTOM OF PAN

Use pans with flat bottoms that make good contact with the entire surface of the burner. Use a straight edge to check pan's flatness Pans with curved or warped bottoms are not recommended. For wok cooking, use only flat-bottom woks that make good contact with the entire surface of the heater. Do not use round-bottom woks or woks with a support ring.

### SIZE OF PAN

Use pans of the correct size for the quantity of food and for the size of the heater in use. Do not use canners or pans that exceed the width of the burners.

### MATERIAL OF PAN

Always use a utensil for its intended purpose. Some utensils are not made to be used on the glass-ceramic cooktop. Follow manufacturer's recommendations. See ACCEPTABLE COOKTOP UTENSILS chart on page 17.

**NOTE:**

- Always follow cookware manufacturer recommendations for use.
- Cookware with heavier bottoms distribute heat effectively and deliver consistent cooking results.
- Grease and residue buildup on the bottom of pots and pans affects heating. Always use cookware that can be easily cleaned after each use.

## ACCEPTABLE COOKTOP UTENSILS

The quality and material of the cookware affects how rapidly and evenly heat is distributed, which affects cooking results.

| COOKWARE MATERIALS | |
|---|---|
| aluminum | • conducts heat quickly and evenly<br>• works for most cooking<br>• medium to heavy weight cookware |
| stainless steel | • heats quickly but with uneven heat distribution<br>• improved heat distribution with steel cookware containing an aluminum or copper core or base |
| copper | • conducts heat quickly and evenly |
| porcelain enamel coated cast iron or stainless steel | • conducts heat slowly and evenly<br>• ideal for frying and browning foods<br>**NOTE:** Do not use bare cast iron on the glass-ceramic cooktop, as it can scratch and damage the surface. Enameled cast iron cookware is recommended, as the smooth porcelain coating will not scratch the cooktop. |
| glass-ceramic or ceramic | • heats slowly but with uneven heat distribution<br>• best results when cooking with low to medium heat |

## ABOUT COOKWARE PLACEMENT

Always place the pan in the center of the heater in use.

**⚠ WARNING** Use of undersized cookware exposes a portion of the hot surface, resulting in a risk of contact with skin or clothing that may cause burns.

**NOTE:** The front burners have an added heating element to use with larger cookware.

| CORRECT PLACEMENT | INCORRECT PLACEMENT |
|---|---|
| 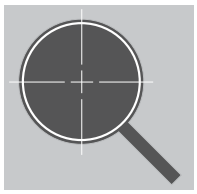 | 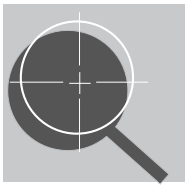 |
| • Cookware centered correctly on heater surface<br>• Pan has a flat bottom and straight sides<br>• Pan rests completely on the cooktop surface<br>• Pan is properly balanced<br>• Pan does not extend more than 1/2" beyond the surface of the heater | • Cookware not centered on heater surface<br>• Curved or warped pan bottoms or sides<br>• Pan does not meet the minimum size required for the heater in use<br>• Pan bottom rests on cooktop trim or does not rest completely on the cooktop surface<br>• Heavy handle tilts pan |

# COOKTOP USE

## RADIANT SURFACE UNITS

Surface units of the radiant cooktop are turned on and adjusted using the control knobs.

Total Cooktop Wattage 9200W

### TO SET RADIANT BURNER

1 Place cookware of the proper size on the radiant surface unit.

2 Push in the corresponding knob on the unit control panel and turn in either direction to the desired heat setting.

When cooking is complete, turn the knob to **Off** and remove the pan from the hot surface.

## SINGLE HEATER BURNERS

The rear burners are Single Heater Burners with heat settings of **High**, **Med** or **Low**.

Rear burners: 6" 1400W

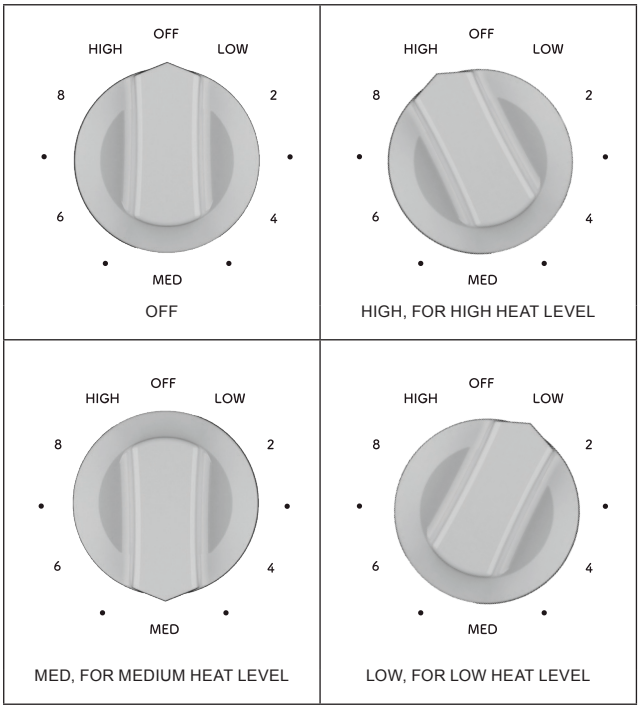


### TO USE SINGLE HEATER BURNER

1 Push in the corresponding control knob and turn in either direction.

2 Select from **High**, **Med** or **Low** heat in the options indicated on the control knob.

## DOUBLE HEATER BURNER

The front burners are Double Heater Burners and are adjustable for either small cookware and lower power heating or larger cookware and higher power heating.

Right-front double burner: 6" / 9" 3000W

Left-front double burner: 9" / 12" 3300W

Both heating elements of a Double Heater Burner are controlled by the same knob, with the element being controlled indicated by a single ring for the smaller heaters and a double ring for the larger heaters.

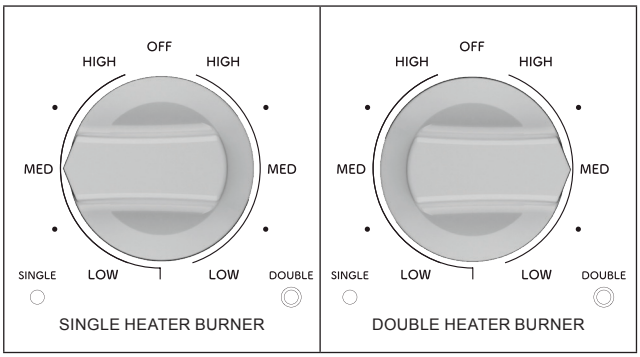


### TO USE DOUBLE HEATER BURNER

1 Push in the corresponding control knob and turn in either direction.

2 Select from **High**, **Med** or **Low** heat in the options indicated on the control knob for the center heating element.

3 If desired, select from **High**, **Med** or **Low** heat in the options indicated on the control knob for the outer heating element.

## WARMING ZONE

The center-rear Warming Zone can be used to keep cooked food warm. The Warming Zone does not have variable heat settings.

Warming Zone: 100W

**⚠ WARNING FIRE, CARBON MONOXIDE HAZARD**

• If materials inside the oven ignite, keep the door closed, turn off the appliance and disconnect the power at the circuit breaker. Wait for the oven to cool before removing contents, then clean the oven and restore power.

• Never place anything (aluminum foil, spill mat, baking stone, cookware, etc.) on the bottom of the oven cavity. Items on the bottom of the oven cavity can trap heat or melt, resulting in damage to the appliance and risk of electric shock, smoke or fire.

• Never cover any slots, holes or passages in the oven bottom and never cover a rack with materials such as aluminum foil, as it blocks airflow and results in risk of carbon monoxide poisoning.

• Do not operate oven without cooktop grates in place, as the grates direct vented air away from walls and cabinets.

**⚠ CAUTION BURN HAZARD**

• Always use dry potholders or oven mitts when using the oven. Moist or damp potholders in contact with hot surfaces may cause steam and risk of burns.

• Do not block or cover oven vents. When the oven is in use, this area may get very hot.

• Racks are designed to stop before coming completely out of the oven to reduce the risk of dropped or spilled foods.

## ABOUT OVEN COOKING

**IMPORTANT:** Do not place anything, including dishes, foil and oven trays, on the bottom of the oven when it is in operation to avoid damaging the porcelain. Never set cookware directly on the bottom of the oven cavity.

1. Preheating the oven is necessary for most oven cooking. Unless the recipe specifically instructs otherwise, place food in the oven only after preheating is complete.
2. It is normal for steam or moisture to emit from the oven vent. Moisture evaporates from food during any cooking process. The moisture content of the food determines the amount of steam or vapor emitted. The moisture may condense on any surface that is cooler than the oven interior, such as door trim and the control panel.
3. During operation, do not leave the oven door open longer than necessary. If the door is left open too long during operation, baking mode will automatically cancel.
4. During operation, the convection fan will automatically stop when the oven door is opened.
5. All baking modes have a time limit of twelve hours. Broil mode has a time limit of one hour. To continue cooking past time limits, simply reset the oven.
6. Place a baking tray on a lower rack to catch drips and spills during cooking.
7. If operating at altitudes greater than 3,000 feet, recipes may require adjustment. Consult USDA or other trusted sources for recommendations on high-altitude baking.

## OVEN RACKS

The SFR3075MS model of the Sharp Freestanding Electric Range comes with two wire flat racks, which can be placed in any of the seven rack positions in the oven.

### FLAT RACK

The flat racks are versatile, low profile, and slide in and out of the oven on rack guides. Multiple racks can be used simultaneously.

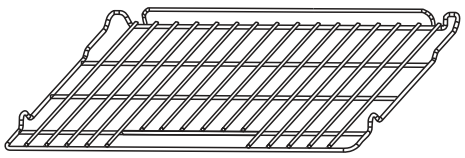

### INSERT/REMOVE RACKS

**NOTE:** The rack can be installed in only one direction.

#### TO INSERT RACK

1. Orient the rack so the handle is toward the front and the interlock features are on the top.
2. Tip the rack so the front is several inches higher than the back.
3. Slip the interlock features under the stop position on the rack guides.
4. Lower the rack front while pushing back until completely inserted.

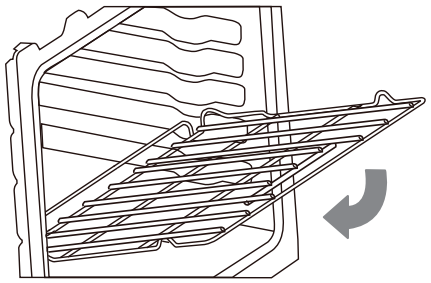

# OVEN USE

### TO REMOVE RACK

1 Remove all food and utensils from rack.
2 Firmly grasp rack from both sides.
3 Pull rack out until it reaches the stop position.
4 Lift up on the front of the rack and pull outward.

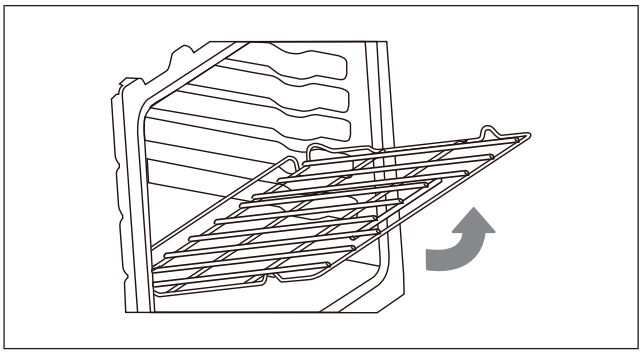

### RACK POSITIONS

For best performance, adjust racks so food is positioned at the center of the oven. For most foods, the best rack position is the center position, the fourth from the bottom. For larger foods, such as roasts or turkeys, use a lower position. When broiling, food should be close to the broil burner in one of the top two rack positions. When using multiple racks simultaneously, space out the food around the oven center.

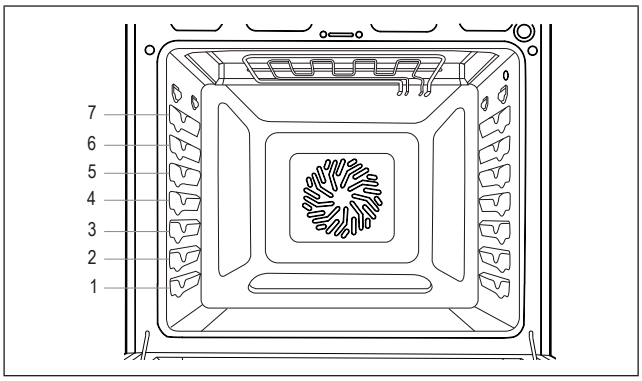


## COMPONENT COOLING FAN

The cooling fan activates during any cooking mode to cool inner components and outer door surfaces. This air is exhausted through the vent located above the oven door. It continues to run until components have cooled sufficiently. The cooling fan operates at double speed (or RPM's) whenever the inner components' temperature becomes too high.

## OVEN DOOR

To avoid oven door glass breakage:

- Always ensure racks are fully inserted and no bakeware extends past the front edge of an oven rack before closing the oven door.
- Do not hit glass surfaces with bakeware or other objects.
- Do not wipe down glass surfaces until the oven has completely cooled.
- Do not set objects on the glass surface of the oven door.

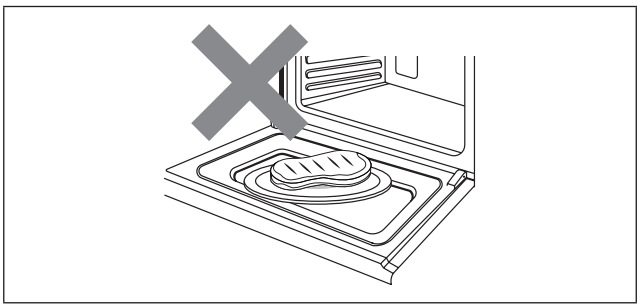

## OVEN VENTS

Blocking or covering the oven vents will cause poor air circulation, affecting cooking, cleaning and cooling results.

- Both the upper and lower oven vents allow fresh air to enter the cooling system.
- The lower oven vent also allows hot air to be expelled from the cooling system.

## OVEN CONDENSATION AND TEMPERATURE

- It is normal for a certain amount of moisture to evaporate from food during any cooking process. The amount of condensation depends on the moisture content of the food.
- The moisture may condense on any surface that is cooler than the inside of the oven, such as the control panel.
- The Freestanding Electric Range has an electronic temperature sensor to help maintain an accurate temperature. Your previous oven may have had a mechanical thermostat that drifted gradually to a higher temperature. You may need to adjust your favorite recipes when cooking in a new oven.

## COOKING WITH TRUE EUROPEAN CONVECTION

In a conventional oven, the heat sources cycle on and off to maintain an average temperature in the oven cavity. As the temperature gradually rises and falls, gentle air currents are produced within the oven. This natural convection tends to be inefficient because the currents are irregular and slow.

Sharp's Freestanding Electric Range utilizes True European Convection, which enhances cooking efficiency, as well as the general cooking process.

TRUE EUROPEAN CONVECTION

Bake Element and Broil Element

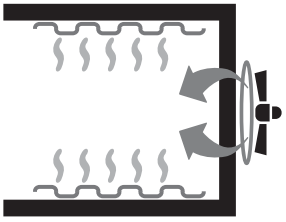

## ADVANTAGES OF CONVECTION COOKING

- Baking on multiple racks saves time and provides even cooking results in food
- Prepares whole meals at once with no flavor transfer
- Requires no specialized bakeware
- Dehydrates herbs, fruits and vegetables
- Saves time and energy
- Convection broiling allows for extraordinary grilling with thicker cuts of food

## OVEN OPERATION SYMBOLS

| FUNCTION | ICON | DEFAULT TEMP. |
|---|---|---|
| Bake | | 350 °F |
| Broil Hi | | 590 °F |
| Broil Low | | 550 °F |
| Pizza | | 400 °F |
| Air Fry | | 400 °F |
| Convection Bake | | 350 °F |
| Convection Roast | | 350 °F |
| Warm | | 150 °F |
| Proof | | No default temperature |
| Steam Clean | | No default temperature |
| Self Clean | | 820 °F |

# OVEN USE

## PREHEAT

For most oven cooking, preheating the oven is recommended and desirable. Some foods, such as large pieces of meat where the total cooking time is much longer than preheating time, do not technically require preheating time.

In all oven modes that require preheating, the oven will automatically enter preheat mode after **START/ENTER** pad is touched. The temperature display will show the current oven temperature as it increases until the set temperature is reached. Once the set temperature is reached, an alert will sound indicating preheating is complete.

## BAKE

The Bake mode applies heat from both above and below the food to achieve exceptional baking performance. The Bake mode works best with small to medium sized foods requiring only one rack positioned at the center of the oven, such as casseroles, frozen dinners, single-layer cakes and individual racks of cookies.

### TO BAKE

1. Touch **Bake** pad.
2. The default temperature for Bake mode is 350 °F. Use the numeric keypad to adjust to the desired oven temperature.
3. Touch **START/ENTER** pad.
4. Allow the oven to preheat before placing food in oven.
5. When cooking is complete, touch **STOP/CLEAR** pad to exit Bake mode.

## BROIL HI/LOW

The Broil mode is designed to provide similar results to grilling by exposing food to direct radiant heat from the broil burner at the top of the oven. Broil can be used to cook steaks or other foods where a seared exterior is preferred or in short durations to brown casserole tops or melt cheese. Broil works best with food in rack positions near the top of the oven. The Broil mode will not operate if the oven door is open. If the door is left open, an alert will sound to close the door, and if the door is not closed, Broil mode will cancel automatically.

**NOTE**:

- The broil heating element is very powerful. Monitor food closely to avoid burning.
- When broiling meat, it is recommended to use a broiling pan to allow grease and juices to drain from the meat.

### TO BROIL

1. Touch **Broil** pad.
2. The default setting is Hi Broil. To select Low Broil, touch **Broil** pad again.
3. Touch **START/ENTER** pad. Allow the oven to operate 5–10 minutes before placing food in the oven. No preheat alert will sound.
4. When broiling is complete, touch **STOP/CLEAR** pad to exit Broil mode.

## PIZZA

The Pizza mode uses a customized heating algorithm to bake fresh pizza. Fresh pizza can be homemade or purchased from a store or specialty shop.

### TO BAKE PIZZA

1. Place oven rack in the center position, then touch **Pizza** pad.
2. The default temperature for Pizza mode is 400 °F. Use the numeric keypad to adjust to the desired oven temperature.
3. Touch **START/ENTER** pad.
4. Allow the oven to preheat before placing food in oven.
5. When cooking is complete, touch **STOP/CLEAR** pad to exit Pizza mode.

## AIR-FRY

The Air Fry mode uses convection fans to cook foods with moist, soft interiors and perfectly crisped exteriors without using cooking oil.

1. Place an oven rack one position above center, then touch **Air Fry** pad.
2. The default temperature for Air Fry mode is 400 °F. Use the numeric keypad to adjust to the desired temperature.
3. Touch **START/ENTER** pad.
4. Allow the oven to preheat before placing food in oven.
5. Place food for air-frying on a flat, non-stick baking tray, and heat according to your recipe or the chart below.
6. When air-frying is complete, touch **STOP/CLEAR** pad to exit Air Fry mode.

| AIR-FRY FOODS | TEMPERATURE | COOK TIME (MINUTES) |
|---|---|---|
| frozen fries | 475 °F | 20 |
| fresh fries | 475 °F | 18 |
| frozen wings | 450 °F | 45 |
| fresh wings | 450 °F | 35 |
| frozen mozzarella sticks | 475 °F | 6 |
| frozen chicken nuggets | 440 °F | 12 |
| brussels sprouts | 440 °F | 15 |
| chicken tenders | 440 °F | 30 |

**NOTE**: For more even and crispy results, flip foods halfway through cooking time.

## CONVECTION BAKE

The Convection Bake mode uses a fan inside the oven to circulate hot air, providing even distribution of heat for more efficient baking. This mode is perfect for baking recipes that require the use of multiple racks.

**NOTE**: Multiple rack heating works best with the racks arranged evenly around the center of the oven.

### TO CONVECTION BAKE

1. Touch **Convection Bake** pad.
2. The default temperature for Convection Bake mode is 350 °F. Use the numeric keypad to adjust to the desired oven temperature.
3. Touch **START/ENTER** pad.
4. Allow the oven to preheat before placing food in oven.
5. When baking is complete, touch **STOP/CLEAR** pad to exit Convection Bake mode.

## CONVECTION ROAST

The Convection Roast mode is designed for roasting large pieces of meat and uses a fan inside the oven to circulate hot air. This provides an even distribution of heat for more efficient heating and is better for browning roasts and creating crispier skin on poultry.

### TO CONVECTION ROAST

1. Touch **Convection Roast** pad.
2. The default temperature for Convection Roast mode is 350 °F. Use the numeric keypad to adjust to the desired oven temperature.
3. Touch **START/ENTER** pad and allow the oven to preheat before placing food in oven.
4. When cooking is complete, touch **STOP/CLEAR** pad to exit Convection Roast mode.

## KEEP WARM

The Keep Warm mode is designed to keep cooked foods hot by maintaining a maximum temperature of 150 °F. For best results, do not use Keep Warm mode for more than 2 hours.

**⚠ WARNING FOODBORNE ILLNESS HAZARD**

- Bacteria may grow in food at temperatures below 140 °F. Do not attempt to cook food using Keep Warm mode. This mode is designed to keep cooked foods warm, not heat cold foods.

### TO KEEP WARM

1. Touch **Keep Warm** pad.
2. Touch **START/ENTER** pad.
3. When warming is complete, touch **STOP/CLEAR** pad to exit Keep Warm mode.

## PROOF

The Proof mode uses the oven lights to provide a gently warm environment for rising bread or dough. As high temperatures will kill yeast, Proof mode will not start if the oven is too warm from previous use.

### TO PROOF

1. Touch **Proof** pad.
2. Touch **START/ENTER** pad. Preheat is not required. Place food in oven immediately.
3. When proofing is complete, touch **STOP/CLEAR** pad to exit Proof mode.

## STEAM CLEAN

The Steam Clean mode is designed to gently warm oven surfaces to create steam and loosen grease and light soils.

**⚠ CAUTION BURN HAZARD**

- Use caution to avoid contact with hot surfaces. Oven surfaces, especially the oven bottom, may be hot.
- Hot surfaces may create steam in a wet sponge or cloth. If steam occurs when wiping the oven, allow the oven to cool slightly before wiping.

### TO STEAM CLEAN

1. Start with a cool oven and remove all items from inside, including oven racks. Wipe out any large spills or excess debris. Scrape off and remove any burnt-on debris with a stiff plastic utensil, such as a hard plastic spatula or plastic paint scraper. To soften tough stains, spray inside surfaces with water or wipe with a wet sponge before using Steam Clean mode.
2. Pour 1 cup (8 oz) water in the center bottom of the oven and close the door.
3. Touch **Steam Clean** pad. Touch **START/ENTER** pad. The door does not lock during a Steam Clean cycle. Do not open the door until the Steam Clean cycle is complete.
4. When the Steam Clean cycle is complete, soak up any water in the oven bottom and wipe down interior surfaces with a soft, nonabrasive sponge or cloth. Touch **STOP/CLEAR** pad to exit.

# OVEN USE

## SELF CLEAN

The Self Clean mode uses very high oven temperatures capable of reducing stubborn oven spoils to ash that can be easily wiped out once the oven is cool.

**⚠ WARNING FIRE AND BURN HAZARDS**

- Before starting a Self Clean cycle, ensure oven is empty. Remove broiler pan, racks, cookware and any other materials and remove excess grease or food from inside the oven to avoid risk of ignition.
- The oven door locks several minutes after the start of a Self Clean cycle. If the door is opened before it locks, the Self Clean cycle is canceled. If the door does not lock within 15 minutes, cancel Self Clean and contact an authorized servicer for repair.

**NOTE**:

- Due to the high temperatures, it is advisable to use Self Clean mode during cooler weather to avoid unnecessarily burdening the home air conditioning system.
- Self Clean can be set to run for 3, 4 or 5 hours. Shorter times use less energy, but longer times allow for more thorough cleaning.
- 3, 4 and 5-hour cycles do not include cooling time. Allow an additional 60 to 90 minutes for the door to unlock.
- During Self Clean, do not use the rangetop. It is not safe to operate any part of the appliance during a Self Clean cycle.

### TO SELF CLEAN

1. Start with a cool oven and remove all items from inside, including oven racks. Wipe out any large spills or excess debris.
2. Touch **Self Clean** pad. Use the numeric pad to select the number of hours of the Self Clean cycle.
3. Touch **START/ENTER** pad. The oven door is locked during a Self Clean cycle.
4. When the oven has unlocked and cooled completely, wipe out any ashy residue with a damp, nonabrasive sponge or cloth. Touch **STOP/CLEAR** pad to exit. If a Self Clean cycle is canceled prematurely, the oven remains locked until it has cooled sufficiently.

## DELAY

The Delay function allows you to delay the start of a baking operation until a specified time.

**⚠ CAUTION FOODBORNE ILLNESS HAZARD**

- Foods that spoil easily, such as milk, eggs, fish, stuffing, poultry and pork, should not be allowed to sit for more than 1 hour before cooking. Spoilage may occur sooner if oven is warm.

**NOTE**:

- Once Delay has been set, it cannot be modified. To set a different Delay start time, oven operation must be canceled and restarted.
- Delay cannot be used with Pizza or Broil modes.
- Delay start time cannot be set more than 12 hours in advance.

### TO DELAY OVEN OPERATION

1. Select oven baking mode according to previous directions.
2. Touch **Delay** pad. The clock will begin to flash, indicating the start time can be entered.
3. Use the numeric keypad to set the start time. Touch **Delay** pad to toggle between AM and PM.
4. Touch **START/ENTER** pad. Place food in the oven.
5. Between time of entry and set Delay start time, the clock on the display will alternate between the time of day and set Delay start time. DELAY START will appear above the clock whenever the Delay function is set.
6. When the Delay start time is reached, an alert sounds to indicate the oven is starting.

## COOK TIME

The Cook Time function is used to set oven operation for a specific duration, after which time oven operation will stop. The Cook Time function can be used in conjunction with the Delay function. To use Cook Time with Delay, set the delayed start time as described above first, then set Cook Time as described below.

### TO SET COOK TIME

1. Select oven baking mode by touching the corresponding touchpad.
2. Touch **START/ENTER** pad.
3. Touch **Cook Time** pad. The clock will display *00:00*, indicating the duration can be entered.
4. Use the numeric keypad to set the duration in hours and minutes (hh:mm).
5. Touch **START/ENTER** pad. The clock begins to count down.
6. When the clock reaches 00:00, the display flashes and an alert sounds to indicate the baking mode has ended. The oven will either turn off or revert to Keep Warm mode, depending on Control Settings. See page 13 for Control Settings.
7. Touch **STOP/CLEAR** pad to clear the signal or exit timed bake early.

**⚠ WARNING** TIP-OVER HAZARD

- Always confirm the anti-tip device is engaged per instructions in Installation Manual before moving the appliance for cleaning, servicing or any other reason. Failure to follow these instructions results in a risk of injury or death to a child or adult if the range is tipped.

## COOKTOP CLEANING

**⚠ CAUTION** Before cleaning any part of the rangetop, ensure the following:

- Cooktop surface burners are all turned OFF.
- Cooktop surface is cool and Hot Surface Indicator is OFF.
- Controls are LOCKED. See CONTROL LOCK on page 13.

## DAILY USE CLEANING

Use only products specifically designed for glass-ceramic cooktops. Read and follow all instructions and warnings on the cleaning product labels.

Before using the rangetop, clean the cooktop with cooktop cleaner. To avoid damage to the cooking surface, do not apply cooktop cleaner to the glass surface when it is hot. Do not wipe any heater areas until the Hot Surface Indicator is off and the heater is cool.

### TO CLEAN RANGETOP

1. Apply a few drops of cooktop cleaner to the cool cooktop.
2. Dampen a paper towel and wipe the cooktop surface.
3. Wipe off cooktop cleaner with another dampened paper towel.
4. Wipe dry with a dry paper towel.

**NOTE:**

- Sugary spills and other products can damage the ceramic glass surface and must be removed at once while the surface is still hot. See BAD SPILLS below.
- Cookware bottoms and cooktop must be clean before the cooktop is turned on.
- Wipe up food spills and spatters before they burn on the surface.
- Do not mix cleaning products. Mixtures may interact and damage the surface.

## BAD SPILLS

If spills of dry sugar, sugar syrup, tomato products or milk occur or other residue is heavily burned-on during heating, clean the glass surface at once. These spills and residue can cause pitting of the surface of your cooktop unless the spill is removed while the cooktop is hot.

**⚠ WARNING USE SPECIAL CARE WHEN REMOVING BAD SPILLS WHILE COOKTOP SURFACE IS HOT.**

### TO REMOVE BAD SPILLS

**IMPORTANT:** It is necessary to begin cleaning bad spills (sugary spills, milk or tomato-based product spills, melted plastics or heavily burned-on residue) while the cooktop is HOT.

1. Turn off all heaters and remove all pans at once.
2. Wearing an oven mitt, use a scraper at a 30° angle to the glass-ceramic surface and scrape spill or residue from hot surface to a cooler area.
3. Remove the soil with paper towels.

**NOTE:**

- Do not use the scraper for daily cleaning, as it may wear the pattern on the glass.
- If the glass-ceramic surface of the cooktop is damaged due to pitting, it should be replaced. Damage from pitting is not covered by warranty.

## METAL MARKS

Metal marks should be removed directly after the cooktop has cooled. Metal marks can become permanent if not removed at once.

### TO REMOVE METAL MARKS

1. Dampen a cleaning pad. A dry or soiled pad or a pad not specifically designed for glass-ceramic cooktops can damage the glass-ceramic surface.
2. Scrub the area of the marks to remove as much soil as possible.
3. Apply a few drops of cooktop cleaner over the soil, cover with a damp paper towel and let stand 30 minutes to 1 hour. Cover with plastic wrap to keep moist.
4. Scrub again and wipe off with a clean, damp paper towel.
5. Wipe dry with a dry paper towel.

### DO NOT USE ON RANGETOP

- glass cleaners containing ammonia or chlorine bleach
- caustic cleaners that may etch the surface
- abrasive cleaners
- metal scouring pads, scrub sponges or steel wool
- powdery cleaners containing chlorine bleach
- flammable cleaners, such as lighter fluid or WD-40

## DAMAGED COOKTOP

**DO NOT TRY TO CLEAN A CRACKED OR BROKEN COOKTOP.**

**Call 1-800-BE-SHARP for an authorized servicer.**

# CLEANING AND MAINTENANCE

## MAINTAINING STAINLESS-STEEL

The stainless-steel drawer exterior and rangetop control panel should be wiped often with a damp, soft cloth and polished to maintain its beauty. There are many products designed specifically for cleaning and shining the stainless exterior. Cleaner should be applied to a soft cloth rather than sprayed directly on the appliance. Follow all cleaning product package instructions carefully.

### TO POLISH STAINLESS STEEL

1 Dampen a clean, soft cloth with water or cider vinegar. For heavy staining, use undiluted vinegar. For light staining, dilute 2 tablespoons cider vinegar in 1 cup warm water.

2 Wipe the exterior stainless-steel in the direction of the grain.

3 Buff with a clean, dry, soft cloth until dry.

## CONTROL PANEL CLEANING

**⚠ CAUTION ELECTRIC SHOCK HAZARD**

- Do not use excessive water or cleaners to clean knob areas. Do not spray kitchen cleaners directly into the openings behind the knobs. If moisture is forced into openings behind knobs, there is risk of electric shock.

**IMPORTANT:** Do not use scouring pads, abrasive cleaners, strong liquid chemicals, steel wool or oven cleaners to clean the control panel, as these may damage the finish and cause cosmetic damage.

**NOTE**: The control panel and oven control can be disabled during cleaning by activating the Control Lock. Touch and hold **Control Lock** pad for 3 seconds to activate or deactivate Control Lock.

### TO CLEAN CONTROL PANEL

1 For best results and a prolonged life, clean the user interface and control panel after each use. To remove knobs for easier cleaning, ensure knobs are in the **OFF** position, then pull straight back with firm pressure to remove knob from stem.

2 Clean entire panel with a slightly damp, non-abrasive cloth, using mild soap and water. Glass cleaner can be used on oven control panel to remove streaks, and stainless-steel cleaner can be used on exposed metal to remove streaks.

3 Handwash knobs in warm, soapy water.

4 Replace knobs, taking care to align the profile in the knob to the stem shape to ensure a smooth fit and avoid damage to knob or control.

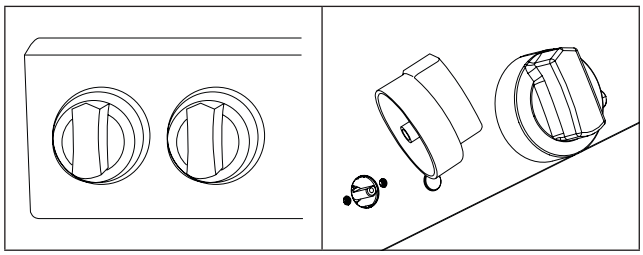

## OVEN INTERIOR CLEANING

**⚠ CAUTION BURN HAZARD**

- Oven surfaces may be hot, and hot surfaces may create hot steam in a wet sponge or cloth when cleaning. Use caution to avoid contact with hot surfaces. If steam is evident, wait until the oven has cooled completely.

### TO CLEAN OVEN INTERIOR

1 For best results and a prolonged life, check oven after each use for spills or spattering that require clean-up. Wipe out interior with a slightly damp, non-abrasive cloth, using mild soap and water to remove light spills.

2 For moderate soil, use Steam Clean. For stubborn or heavy soil, use Self Clean. See pages 23 and 24.

## OVEN LIGHTS

**⚠ CAUTION SHOCK, BURN, LACERATION HAZARDS**

- Disconnect power to oven and allow oven to cool completely before attempting to service light bulbs.
- Handle the glass lamp cover carefully. If the lamp cover is difficult to remove, do not force it, as it may break. Contact a qualified service provider for repairs.
- Never operate the oven without the glass lamp cover in place.

### TO REPLACE OVEN LIGHT BULB

1 Locate oven lamps in the top of the oven, near the oven door.

2 Carefully unscrew the glass cover from the base. The light bulb can be removed by firmly pulling straight out from the light socket.

3 Replace the bulb only with G8 style 120V halogen bulb rated 25W or less.

4 Twist the glass cover back onto the lamp socket. Never operate the oven without the glass lamp cover in place.

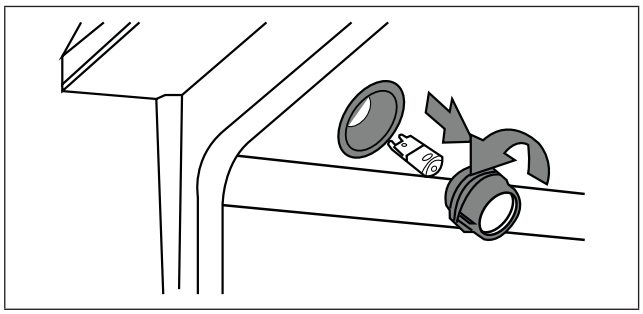

## DRAWER AND DOOR

The oven door can be removed for easier cleaning, servicing or installation.

### TO CLEAN OVEN DOOR

1 Clean the door and drawer frequently to remove dust, spatters and fingerprints. Wipe door surfaces with a slightly damp, non-abrasive cloth, using mild soap and water.

2 For burned-on residue on interior door glass, use a glass cleaning compound and/or a razor scraper.

3 Clean enameled portions of the door interior with a non-abrasive sponge and soapy water.

4 Clean exposed metal portions with stainless-steel cleaner to remove streaks.

**IMPORTANT:** Do not allow excess water or cleaner to enter any holes or slots in the door.

**⚠ WARNING FIRE HAZARD**

- When reinstalling the oven door, confirm it operates and seals correctly. Heat escaping from around the door could ignite cabinetry if the door gasket does not seal completely.
- If the gasket is worn, frayed or damaged in any way, contact a qualified service provider for repair. To maintain proper door seal, do not rub or clean the door gasket, as it has a very low resistance to abrasion.

### TO REMOVE OVEN DOOR

1 Open the door fully.

2 On both door hinges, flip down the lock mechanism. The lock will engage with the door when the door is moved as if it is being closed.

3 Rotate the door toward closed position, stopping when the door is about 2 inches from closed position.

4 Grasp the door firmly from both sides and lift the door up and away from the oven face. Do not lift the door by the handle.

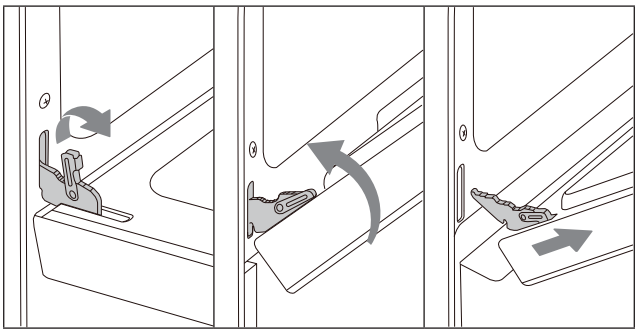

### TO REPLACE OVEN DOOR

1 Holding the door firmly from both sides, align the door to the oven so the hinges slip back into the openings.

2 Rotate the door toward closed position, stopping when the door is about 2 inches from closed position. Allow the door to drop into the notches on the hinges.

3 Rotate the door until fully open and flip up the locking mechanism.

4 Ensure the door opens and closes correctly and is sealed properly. If the door does not operate correctly, remove the door and reattempt installation or contact a qualified service provider.

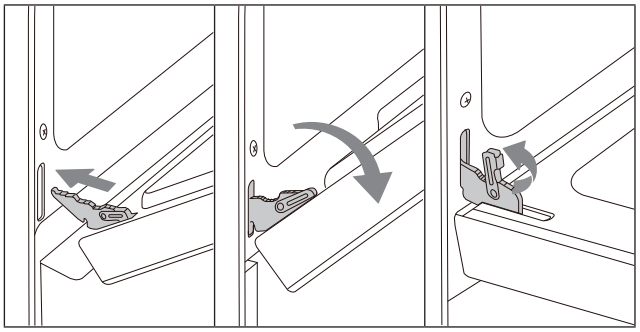

### TO REMOVE DRAWER

It is not necessary to remove the drawer for cleaning, but if desired, it can be removed.

1 Fully extend the drawer.

2 Engage the release levers on each side while gently pulling on the drawer.

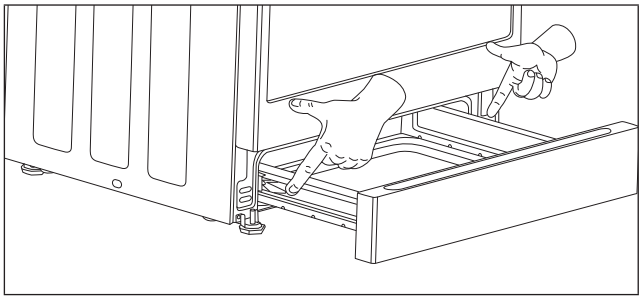

### TO REPLACE DRAWER

1 Align the rails on the drawer with the slides on the range.

2 Gently push the drawer into place until fully closed. Open and close the drawer to ensure slide rails operate properly.

# TROUBLESHOOTING

## BEFORE YOU CALL

| COOKTOP | |
|---|---|
| **PROBLEM** | **SOLUTION** |
| Part of all of the appliance does not operate | The appliance may be disconnected from the power source. If the Control Panel Display is not illuminated or does not respond to manual commands, check the following:<br>• Power is connected at the circuit breaker<br>• The fuse is still functional and not blown<br>• The power cord is properly plugged in to a functional outlet |
| Radiant heaters too hot or not hot enough | Improper cookware: Only use pans with flat bottoms that match the diameter of the cooktop burner in use. Large pots and pans can lose significant heat from the top. Cover pans with a lid to retain heat better. |
| Radiant heater stops glowing | This is normal when radiant heaters are set to low heat settings. |
| Cooktop produces a strong odor or light smoke when turned on | This is normal during the first few uses and will cease after a few initial uses. Ventilate the room to remove odors. |
| Areas of discoloration on cooktop surface | Always clean food spills before the next use to avoid discoloration. See page 25. |
| Metal marks on cooktop surface | Do not slide metal cookware on the cooktop surface. See page 25. |
| Brown streaks or specks on cooktop surface | Always clean boil-overs before the next use to avoid streaks or specks. See page 25. |

| OVEN | |
|---|---|
| **PROBLEM** | **SOLUTION** |
| Strong odor during initial use of new oven | This is normal and will disappear after one or two uses. To be careful, ensure all packaging has been removed from the appliance and check around door sides and inside drawer. |
| Control Panel Display is dark and unresponsive | If the Control Panel Display shows only ] or ] [, the appliance is in Sabbath mode. See page 14. |
| Control Panel Display is illuminated but unresponsive | Control Lock may be activated. Touch and hold **Control Lock** pad for 3 seconds to unlock. Alternatively, disconnect and reconnect power at the circuit breaker to reset. |
| Oven door is locked and will not open | If a Self Clean cycle has recently finished, this is normal. Wait for the oven to cool fully, then it will unlock. |
| Door will not close properly | Door is not installed properly. See page 27. |
| Drawer will not close properly | Drawer is not installed properly. See page 27. |
| Oven taking too long to cook | Adjust the oven calibration. See page 13. |
| Food is overcooked | Adjust the oven calibration. See page 13. |
| Food is not baking evenly | Ensure racks are in the correct position. See page 20. |
| Oven light is not working | **1** Oven light bulb may be burned out and need replacing. See page 26.<br>**2** If the Control Panel Display shows only ] or ] [, the appliance is in Sabbath Mode. See page 14. |
| Oven will not start Self Clean cycle | If the oven was recently used or the cooktop is currently in use, this is normal. Self Clean can only be initiated when the oven is cool and the cooktop is not in operation. |
| Metal popping sounds during Self Clean cycle | This is normal. |

| OVEN | |
|---|---|
| **PROBLEM** | **SOLUTION** |
| Oven not clean after Self Clean cycle | After a Self Clean cycle, remaining ash residue must still be wiped out by hand. If black soil still remains, the oven may have been too heavily soiled for a single Self Clean cycle. Rerun Self Clean on the longest possible setting. Some areas, such as bottom door corners, may remain too cool to turn to ash and need to be cleaned by hand. |
| Convection fan runs in modes other than Convection Bake or Convection Roast | This is normal. |
| Hot air emitted from openings at back of cooktop | This is normal. |
| Smoke or steam coming from openings at back of cooktop | **1** It is normal for steam to be released from the oven vent. If the exhaust has no smell or smells like normal baking food, this is normal.<br>**2** If the exhaust smells like burning food, check the food in the oven and ensure there is no spillage or spattering producing smoke.<br>**3** If the oven is in a Self Clean cycle, this is normal.<br>**4** If the exhaust smells like something other than food and residue burning, such as plastic or wood, turn off the oven and contact a qualified service provider. |
| Condensation on door glass | This is normal. |
| Cooling fan continues to run after oven is turned off | This is normal. |
| E + a number appears in the display | This is an error code. Touch **STOP/CLEAR** pad to clear the display and stop beeping. If necessary, reset power to the oven at the circuit breaker. If the error code remains or repeats, make note of the error code and contact a qualified service provider. |

# ERROR CODES

| ERROR CODES | DESCRIPTION | NOTES |
|---|---|---|
| E003 | If the temperature sensor is detected to be open circuit at any time, the fault code will be displayed, all loads will be turned off, and other buttons will be invalid except the CLEAR OFF button. | After the fault is restored, press the CLEAR OFF key to return to standby mode. |
| E004 | If a temperature sensor short circuit is detected at any time, a fault code will be displayed, all loads will be turned off, and other buttons will be invalid except the CLEAR OFF button. | After the fault is restored, press the CLEAR OFF key to return to standby mode. |
| E005 | If a power board data transmission error is detected at any time, a fault code will be displayed, all loads will be turned off, and all buttons will be invalid. | After the fault is restored, it automatically returns to standby mode |
| E006 | If a short circuit is detected in the meat probe circuit at any time, a fault code will be displayed, all loads will be turned off, and all buttons except the CLEAR OFF button will be invalid. | After the fault is restored, press the CLEAR OFF key to return to standby mode. |
| E008 | If it is detected at any time that the door lock motor cannot lock or unlock the door normally within 40 seconds, a fault code will be displayed, all loads will be turned off, and other buttons except the CLEAR OFF button will be invalid. | |
| E009 | When starting other heating modes except high temperature self-cleaning, the cavity temperature is detected to be over 640°F During the operation of other heating modes except high temperature self-cleaning, the cavity temperature is detected to be over 640°F, the fault code is displayed, all loads are turned off, and other buttons except CLEAR OFF button are invalid. | |
| E010 | During the high temperature self-cleaning mode, if the cavity temperature is detected to be over 925°F, a fault code will be displayed, all loads will be turned off, and all buttons except the CLEAR OFF button will be invalid. | |
| E012 | During the high temperature self-cleaning mode, if the door is detected to be open, a fault code will be displayed, all loads will be turned off, and other buttons except the CLEAR OFF button will be invalid. | |
| E013 | During the high temperature self-cleaning mode, a door lock error is detected, a fault code is displayed, all loads are turned off, and other buttons except the CLEAR OFF button are invalid. | |
| E017 | In the temperature-controlled heating mode (except PROOF mode), during the preheating stage and the temperaturecontrolled heating stage after entering the temperature control stage, the temperature does not rise by more than 3°C within 20 minutes of continuous heating (when the target temperature is reached, the timer is reset and the judgment is repeated after the heating tube opening temperature is reached). Turn off the load for 2 minutes. After 2 minutes, the temperature drops by less than 2 degrees, the fault code is displayed, all loads are turned off, and other buttons except the CLEAR OFF button are invalid. If the temperature rises by more than 3°C within 10 minutes, the timer will be reset after 10 minutes. | After the fault is restored, press the CLEAR OFF key to return to standby mode. |
| E027 | After starting the heating, if the AD value of the fixed level 2.5V position is detected to be less than 1638 or greater than 2457 for 2 consecutive minutes, the E027 fault will be reported. The fault code will be displayed, all loads will be turned off, and other buttons except the CLEAR OFF button will be invalid and will not beep. The work can be started by disconnecting R77 or R78, and the fault will be triggered after 2 minutes. | After the fault is restored, press the CLEAR OFF key to return to standby mode. |

## PRODUCT SPECIFICATIONS

| | | |
|---|---|---|
| Description | Electric Free Standing Oven | |
| Voltage | 120/208VAC 40Amp | 120/240VAC 50Amp |
| Electric power | 9690W | 12850W |
| Exterior Dimensions | 46 1/4 H x 29 7/8 W x 26 15/16 D | |
| Height to Cooking Surface | in 36" (91.4cm) | |
| Net/Gross Weight | 213/240 lb | |
| Oven Capacity | 6.3 cu. ft. | |
| Power Ratings | Refer to rating plate label | |

## CONTACT US

If at any time you have questions or comments concerning your SHARP product, please contact the SHARP Customer Assistance Center. We are available to assist you through multiple contact methods for your convenience:

**EMAIL**
Available 24/7
US: sharpusa.com

**See the Contact Us section on our sites**

**CHAT ONLINE**

**U.S. | https://support.sharpusa.com/s/**

**CALL US**

**US** **800-BE-SHARP**
800-237-4277

**Contact a Sharp Advisor on the phone**

SHARP®

**SHARP ELECTRONICS CORPORATION** • 100 Paragon Drive • Montvale, New Jersey 07645 • USA
1-800-BE-SHARP (1-800-237-4277)

TINSEB784MRR0 MAY 29, 2026