Installation Instructions and Use & Care Guide

Commercial Gas Tankless Water Heaters

Commercial On-Demand Gas Tankless Water Heaters

Read this manual and the labels on the water heater before you install, operate, or service it. If you have difficulty following the directions, or aren't sure you can safely and properly do any of this work yourself:

- Call our Technical Assistance Hotline which is listed on your warranty. We can help you with installation, operations, troubleshooting, or maintenance. Before you call, write down the model and serial number from the water heater's rating plate.
- Incorrect installation, operation, or service can damage the water heater, and other property, and present risks including fire, scalding, electric shock, and explosion, causing serious injury or death.

WARNING: If the information in these instructions is not followed exactly, a fire or explosion may result causing property damage, personal injury or death.

Do not store or use gasoline or other flammable vapors and liquids in the vicinity of this or any other appliance.

WHAT TO DO IF YOU SMELL GAS

- **Do not try to light any appliance.**
- **Do not touch any electrical switch; do not use any phone in your building.**
- **Immediately call your gas supplier from a neighbor's phone. Follow the gas supplier's instructions.**
- **If you cannot reach your gas supplier, call the fire department.**

Installation and service must be performed by a qualified installer, service agency or the gas supplier.

MODEL:

CTH-199M

LOW LEAD CONTENT

Keep this manual with the heater for future reference whenever maintenance, adjustment or service is required.

Retain your original receipt as proof of purchase.

100401602_2000854752B
May 2026

TABLE OF CONTENT

WATER HEATER BASICS 4

COMPONENT VIEW 4

TYPICAL INSTALLATIONS 5

DIMENSIONS 6

SUPPLY CONNECTIONS 7

SPECIFICATIONS 8

IMPORTANT SAFETY INFORMATION 9

RISKS DURING INSTALLATION AND MAINTENANCE 10

RISKS DURING OPERATION 10

GETTING STARTED 12

Read Before Installation 12

Included Items 14

Available Accessories 15

INSTALLATION 17

Installation Environment 17

Unit Clearances 17

Mounting the Water Heater 17

Combustion Air and Venting Installation 18

Venting 21

Installing the Vent Pipe 23

Exhaust Vent for Indoor Installation 23

Typical Venting Configurations: 24

Common Venting 28

Clearances for Sidewall Terminations 33

Clearances for Rooftop Terminations 34

Exhaust Venting for Outdoor Installation 37

Outdoor Available Accessories 37

Gas Supply and Gas Pipe Sizing 38

Gas Conversion Restriction 40

Water Connections 40

Recirculation 41

Combination Potable Water and Space Heating 42

TABLE OF CONTENTS

Dual Purpose Water Heating for the State of Massachusetts 43
Water Quality 44
Pressure Relief Valve 45
Condensate Drain 45
Electrical Connections 46
Cascade System 47
OPERATION **48**
Accessory Connections 49
FOR YOUR SAFETY, READ BEFORE OPERATING 50
Start-up Instructions 50
Shut-Down Instructions 50
Emergency Shut-Down 50
Temperature Adjustment/Setting the Temperature 53
Unit Conversion Mode 54
Configuration Mode (A Mode) 55
Configuration Mode (C Mode) 56
Configuration Mode (P Mode) 57
MAINTENANCE **58**
THIS PAGE INTENTIONALLY LEFT BLANK 59
Regular Maintenance 60
Unit Draining & Power Outage (Freeze Protection) 61
Condensate Drain 61
Inlet Water Filter 61
Bypass Cartridge 64
General Troubleshooting 65
Error Codes 66
Fault Analysis of Error Codes 66
TROUBLESHOOTING **72**
COMPONENT LIST **73**
FLOW RATE CAPACITY CHART **78**
GPM VS PRESSURE LOSS CHART **79**

COMPONENT VIEW

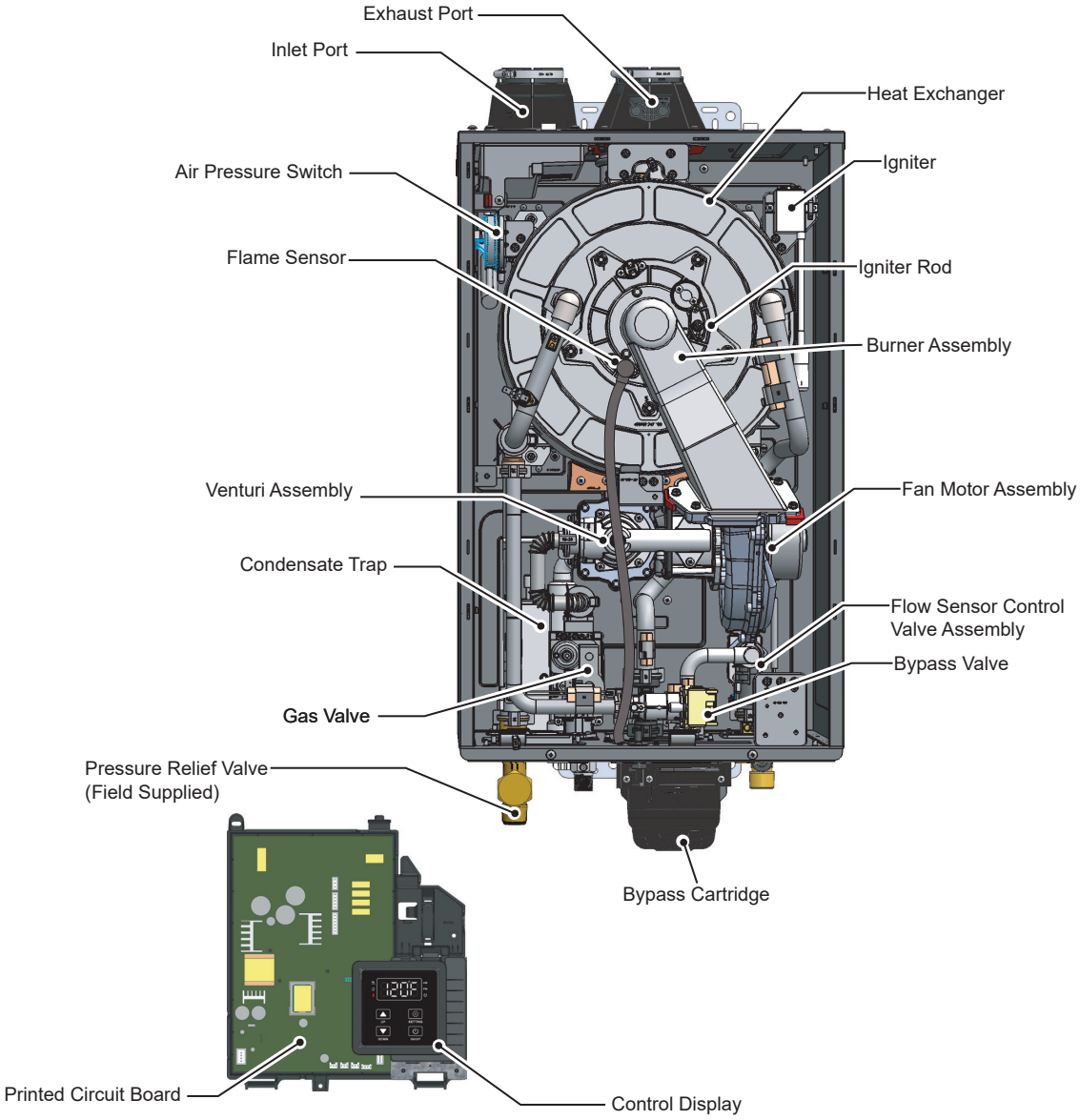

Bypass Cartridge:
The Bypass cartridge will come preinstalled from the factory. Please verify the three screws securing the Bypass cartridge are tightened, See “Bypass Cartridge” on page 64. NOTE: Pressure Relief Valve will need to be field supplied with this model.

TYPICAL INSTALLATIONS

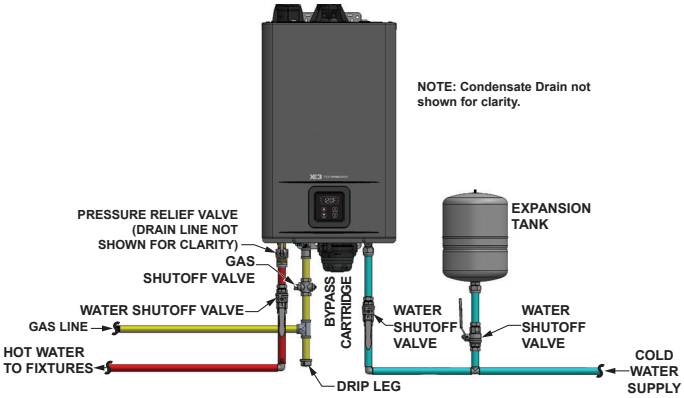

Typical Installation with Bypass Cartridge

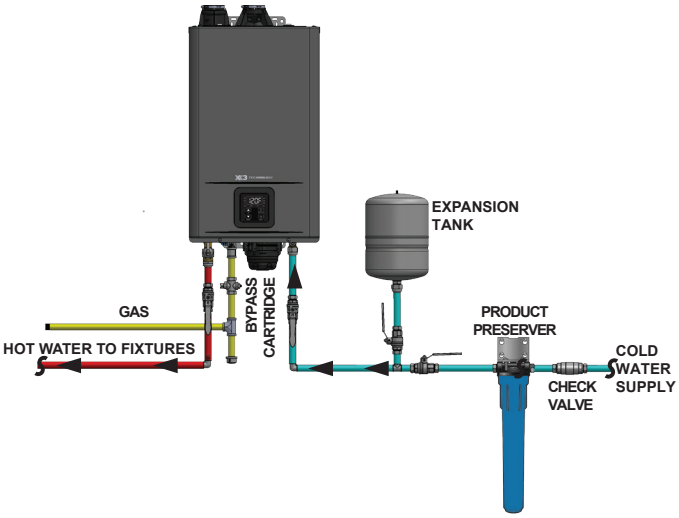

Typical Installation with Bypass Cartridge and Product Preserver

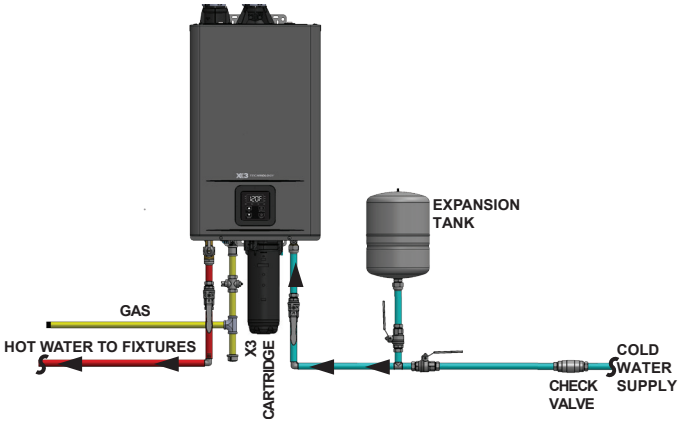

Typical Installation with X3 Cartridge

NOTE: If copper piping is used, then unions must be dielectric at inlet and outlet.

DIMENSIONS

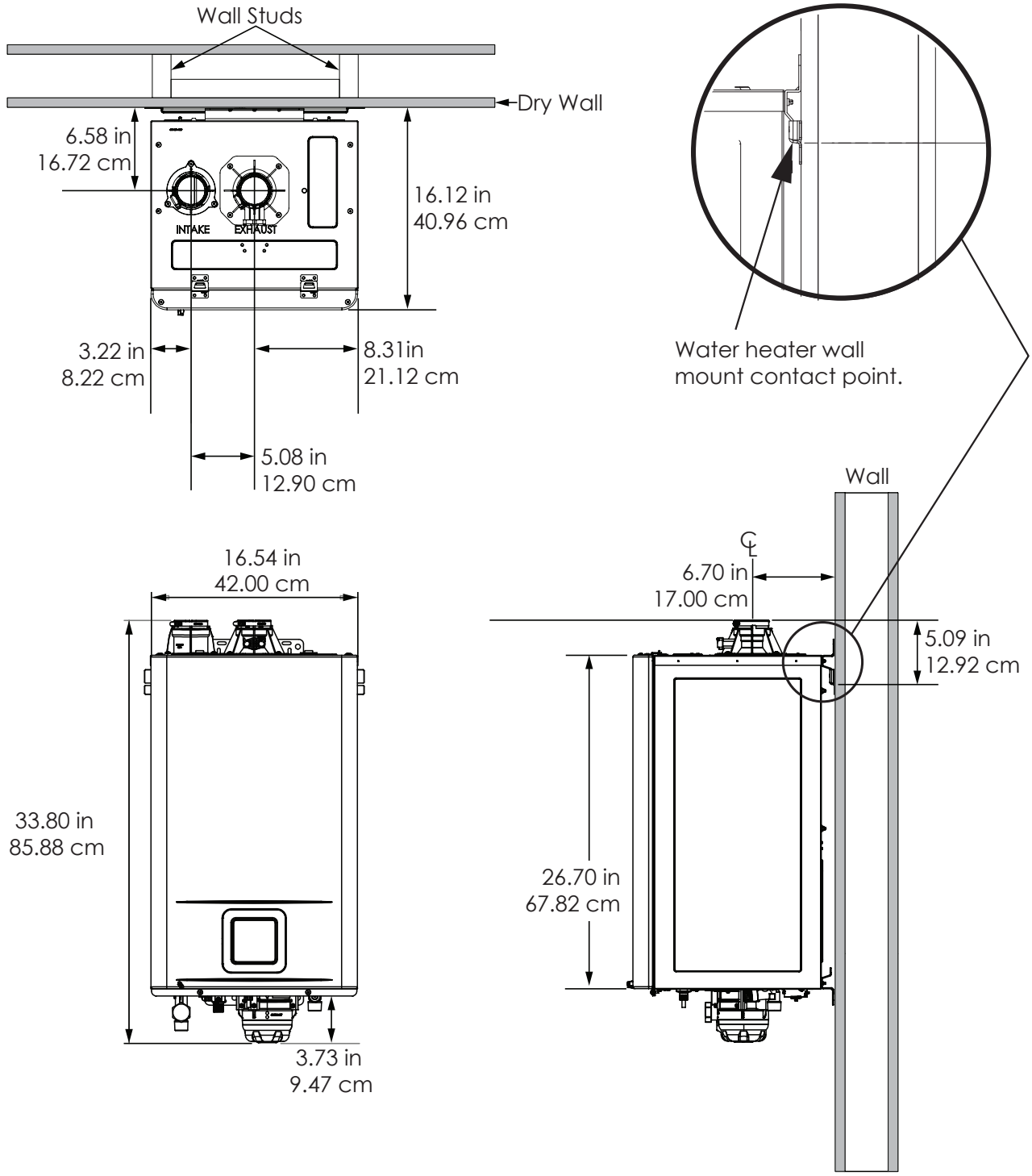

Note: If optional X3 cartridge installed - top of flue to base of 41.8 inches (106.2cm)

SUPPLY CONNECTIONS

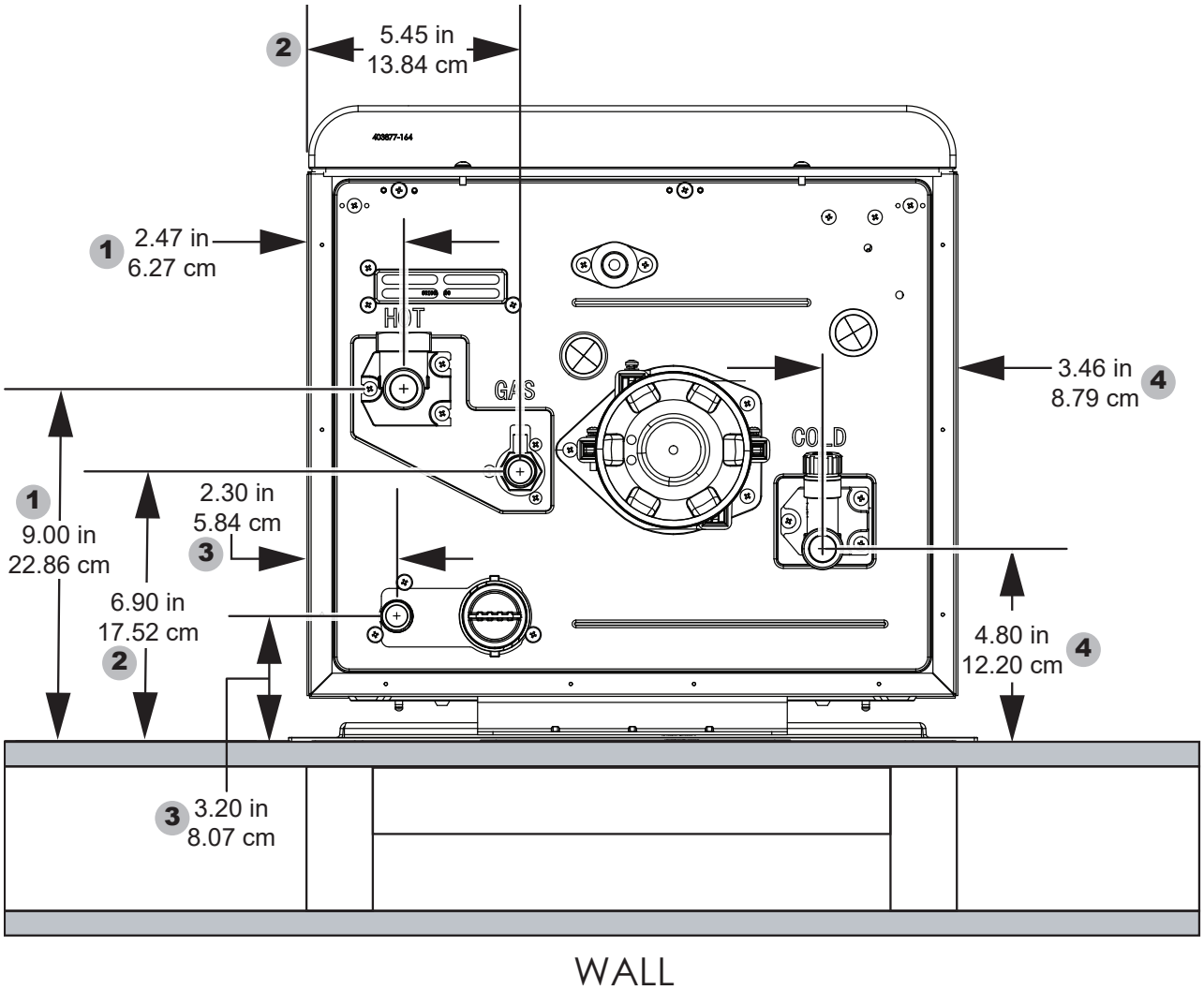

Table 1: Supply Connections

Item	DESCRIPTION	MEASUREMENT	CONNECTION SIZE
1	HOT OUTLET	9.00 in/22.86 cm x 2.47 in/6.27 cm	3/4 in MNPT
2	GAS INLET	6.90 in/17.52 cm x 5.45 in/13.84 cm	1/2 in MNPT
3	CONDENSATE	3.20 in/8.07 cm x 2.30 in/5.84 cm	1/2 in MNPT
4	COLD INLET	4.80 in/12.20 cm x 3.46 in/8.79 cm	3/4 in MNPT

SPECIFICATIONS

Table 2: Specifications

Model		CTH-199M
Natural Gas/Propane Input (Minimum Operating Range)	BTU/h	9,000
Natural Gas/Propane Input (Maximum Operating Range)	BTU/h	199,000
Gas Connection		1/2 in MNPT
Water Connections		3/4 in NPT
Water Pressure*	psi (MPa)	15 - 150 (0.1 - 1)
Water Flow Rate	gpm (Lpm)	0.26 - 10.5 (1.0 - 39.7), Activation min: 0.4 (1.5)
Natural gas Inlet Pressure	in W.C. (kPa)	Min 3.5 (0.87) Max. 10.5 (2.62)
Propane Inlet Pressure	in W.C. (kPa)	Min 8.0 (1.99) Max. 13.0 (3.24)
Weight	lbs (kg)	102 (46.2)
Dimensions (including By-Pass Cartridge)	inch	W 16.54 x H 33.80 x D 16.12
	cm	W 42.00 x H 85.55 x D 40.96
Ignition		Electronic Ignition
Electric Supply		120 V, 60 Hz, <2 A

*40 psi or above is recommended for maximum flow.
****Water Heater Category -** Does not apply to Outdoor or Direct Vent Installations.
Category IV - a water heater that operates with a positive vent static pressure and with a vent gas temperature that may cause excessive condensate production in the vent.

NOTE:

- Check the rating plate to ensure that this product matches your specifications.
- The manufacturer reserves the right to discontinue, or change at any time, specifications or designs without notice and without incurring obligation.

IMPORTANT SAFETY INFORMATION

Read and follow all safety messages and instructions in this manual.

This is the safety alert symbol. It is used to alert you to potential physical injury hazards. Obey all safety messages that follow this symbol to avoid possible property damage, serious injury or death. Do not remove any permanent instructions, labels, or the data plate from either the outside of the water heater or on the inside of the access panels. Keep this manual near the water heater.

DANGER	**DANGER indicates a hazardous situation that, if not avoided, will result in death or serious injury.**
WARNING	**WARNING indicates a hazardous situation that, if not avoided, could result in death or serious injury.**
CAUTION	**CAUTION indicates a hazardous situation that, if not avoided, could result in minor or moderate injury.**
NOTICE	**NOTICE indicates practices not related to physical injury.**

⚠ WARNING! If the information in these instructions is not followed exactly, a fire or explosion may result causing property damage, personal injury or death. Do not store or use gasoline or other flammable vapors and liquids in the vicinity of this or any other appliance.

An odorant is added by the gas supplier to the gas used by this water heater. This odorant may fade over an extended period of time. Do not depend upon this odorant as an indication of leaking gas. We recommend installing a fuel gas and carbon monoxide detector.

This product is certified to comply with a maximum weighted average of 0.25% lead content.

Important information to keep

Fill out this section and keep this manual in the pocket of the water heater for reference.

Date Purchased:

Model Number:

Serial number:

Maintenance performed:*	Date:

**Operate the Pressure Relief Valve annually and inspect Pressure Relief Valve every 2-4 years (see the label on the Pressure Relief Valve for maintenance schedule). If no label is attached to the Pressure Relief Valve, follow the instructions in the Maintenance section of this manual. See the Regular Maintenance section for more information about maintaining this water heater.*

IMPORTANT SAFETY INFORMATION

To reduce the risk of property damage, serious injury or death, read and follow the precautions below, all labels on the water heater, and the safety messages and instructions throughout this manual.

RISKS DURING INSTALLATION AND MAINTENANCE

Lifting Risk

⚠ WARNING! The water heater is heavy. Follow these precautions to reduce the risk of property damage, injuries from lifting or impact injuries from dropping the water heater.

- Use at least two people to lift the water heater.
- Be sure you both have a good grip before lifting.
- Use an appliance dolly or hand truck to move the water heater.

Explosion Risk

⚠ WARNING! Read the water heater's data plate to determine the type of gas required. Failure to follow these instructions can result in serious injury or death from explosion, fire or carbon monoxide poisoning.

- Do not connect a natural gas water heater to an L.P. gas supply.
- Do not connect an L.P. gas water heater to a natural gas supply.
- Use a new gas supply line approved for Propane or Natural Gas that meets all local and state/provincial codes.
- Install a full port shut-off valve on the gas supply line.
- Maintain the Pressure Relief Valve properly. Follow the maintenance instructions provided by the manufacturer of the Pressure Relief Valve (label attached to Pressure Relief Valve). If no label is attached to the Pressure Relief Valve, follow the instructions in the Regular Maintenance section of this manual. An explosion could occur if the Pressure Relief Valve or discharge pipe is blocked. Do not cap or plug the Pressure Relief Valve or discharge pipe.

Gas Pressure

⚠ WARNING! The gas supply pressure must not exceed the maximum supply pressure as stated on the water heater's data plate. The minimum supply pressure is for the purpose of input adjustment. L.P. gas supply pressure must not exceed 13" water column. Have a qualified person (licensed plumber, gas company personnel, or authorized service technician) check for proper L.P. gas pressure. L.P. gas pressures exceeding 13" water column can result in serious injury or death from explosion or fire.

RISKS DURING OPERATION

Scalding Risk

This water heater can make water hot enough to cause severe burns instantly, resulting in severe injury or death.

- Feel water before bathing or showering.
- To reduce the risk of scalding, install Thermostatic Mixing Valves (temperature limiting valves) at each point-of-use. These valves automatically mix hot and cold water to limit the temperature at the tap. Mixing valves are available at your local plumbing supplier. Follow the manufacturer's instructions for installation and adjustment of the valves.
- Water temperatures over 125°F (52°C) can cause severe burns instantly or death from scalding. The water temperature is set at 120°F (50°C) from the factory to minimize any scalding risk. Before bathing or showering, always check the water temperature. Higher temperatures increase the risk of scalding, but even at 120°F, hot water can scald. If you choose a higher temperature setting, Thermostatic Mixing Valves located at each point-of-use are particularly important to help avoid scalding.

Table 3: Burn/Scald Table

Temperature	Time to Produce a Serious Burn
120°F (49°C)	More than 5 minutes
125°F (52°C)	1½ to 2 minutes
130°F (54°C)	About 30 seconds
135°F (57°C)	About 10 seconds
140°F (60°C)	Less than 5 seconds
145°F (63°C)	Less than 3 seconds
150°F (66°C)	About 1½ seconds
155°F (68°C)	About 1 second

For more information about changing the factory temperature setting, refer to the "Adjusting the Temperature" section in this manual.

- Water temperature will be hotter if someone adjusted the set temperature to a higher setting.
- Should overheating occur or the burner fail to shut off, turn off the manual gas supply valve to the water heater and call a qualified person.

To reduce the risk of unusually hot water reaching the fixtures in the building, install Thermostatic Mixing Valves at each point-of-use.

If anyone in your building is at particular risk of scalding (for example, the elderly, children, or people with disabilities) or if there is a local code or state/provincial law requiring a certain water temperature at the hot water tap, these precautions are particularly important.

According to a national standard American Society of Sanitary Engineering (ASSE 1070) and most local plumbing codes, the water heater's thermostat should not be used as the sole means to regulate water temperature and avoid scalds.

Properly adjusted Thermostatic Mixing Valves installed at each point-of-use allow you to set the temperature to a higher setting without increasing the risk of scalds

Water Contamination Risk

Do not use chemicals that could contaminate the potable water supply. Do not use piping that has been treated with chromates, boiler seal, or other chemicals. Suitable for potable water heating only.

Fire Risk

To reduce the risk of a fire that could result in property damage, or serious injury or death:

- Do not store things that can burn easily such as paper or clothes next to the water heater.
- Do not store or use gasoline or other flammable substances in the vicinity of this or any other appliance.
- Keep the water heater from becoming wet. Immediately shut off the water heater and have it inspected by a qualified person if you find that the wiring, gas valve or user interface have been exposed to water in any way (e.g., leaks from plumbing, leaks from the water heater itself can damage property and could cause a fire risk). If the water heater is subjected to flood conditions or the gas valve or user interface has been submerged in water, the entire water heater must be replaced.

Explosion Risk

High pressures in the water heater can cause an explosion resulting in property damage, serious injury or death. A Pressure Relief Valve is required to be installed on the water heater. A Pressure Relief Valve is supplied. Additional pressure protective equipment may be required by local codes.

A nationally recognized testing laboratory maintains public inspection of the valve production process and certifies that it meets the requirements for Relief Valves for Hot Water Supply Systems, ANSI Z21.22. The Pressure Relief Valve's relief pressure must not exceed the working pressure rating of the water heater as stated on the rating plate.

Carbon Monoxide Risk

⚠ WARNING! This water heater operates by burning gas. Carbon monoxide is a colorless, odorless, gas that is a by-product of burning of fuels such as coal, wood, charcoal, oil, kerosene, propane, and natural gas. Breathing excessive and abnormal amounts of carbon monoxide can cause carbon monoxide poisoning, resulting in serious injury or death. This water heater must be supplied with adequate combustion air and must be properly vented to the outdoors. Have a qualified person (licensed plumber, authorized gas company personnel, or authorized service technician) install the venting system using these installation instructions. When the installation is complete, check the vent's draft using the instructions on page 21.

- Do not install this water heater in a mobile home or manufactured housing.
- Failure to follow these instructions can result in serious injury or death from carbon monoxide poisoning

⚠ WARNING! To reduce the risk of carbon monoxide poisoning, install a fuel gas and carbon monoxide detector if the water heater is installed in a bathroom, bedroom, or any occupied room normally kept closed. Install and maintain the detector in accordance with the manufacturer's instructions and local codes

Read Before Installation

1 Review all of the instructions before you begin work. Improper installation can damage the water heater, your property and other property, and can present risks of serious injury or death.

2 This water heater is designed as a Category IV, positive vented static pressure water heater (vent gas temperatures may cause excessive condensate production in the vent,) which takes its combustion air either from the installation area or from air ducted to the unit from the outside. This water heater must be installed:

- Following all local codes, or in the absence of local codes, follow the current edition of ANSI Z223.1/NFPA 54, National Fuel Gas Code in the USA or B149.1, Natural gas and propane installation code in Canada.
- DO NOT install in a manufactured home (mobile homes).
- Follow the electrical code requirements of the local authority having jurisdiction. In the absence of such requirements, follow the current edition of the National Electrical Code ANSI/NFPA 70 in the U.S. or the current edition of CSA C22.1 Canadian Electrical Code Part 1 in Canada.

These are available from the following:

CSA Group, Inc.
United States:
8501 East Pleasant Valley Road
Cleveland, OH 44131

Canada:
178 Rexdale Blvd.
Toronto, ON
Canada M9W 1R3

National Fire Protection Association
1 Batterymarch Park
Quincy, MA 02269

Check with local code officials about codes governing this installation. Have your installation inspected by a code official to ensure the installation meets all local codes.

NOTICE: Installation and service must be performed by a qualified installer (for example, a licensed plumber or gas fitter). Otherwise, the warranty will be void. The installer (licensed professional) is responsible for the correct installation of the water heater and for compliance with all national, state/provincial, and local codes.

Massachusetts code requires this water heater to be installed in accordance with Massachusetts 248-CMR 2.00 and 248-CMR 5.00: State Plumbing Code. Other local and state/provincial authorities may have similar requirements or other codes applicable to the installation of this water heater.

3 Before you start, check the following:

⚠ Warning! Do not store or use flammable materials, vapors, or liquids in the same location where this water heater is installed.

- All gas water heaters require correct installation to ensure safe and efficient operation. This manual must be followed exactly. Read the entire manual before installation and review the Safety Guidelines" Section.
- Carefully plan the installation location of the heater and vent terminations.
- The water heater must be installed where the proper amount of combustion air will be available to it at all times without obstructions. When installed indoors, the water heater can be direct vented.
- The length of piping between the water heater and fixture determines the time it takes for the hot water to arrive. Consider installing the water heater closer to the fixtures, if the plumbing system allows for it. The water heater should be the first appliance to access the water line after utilities water meter.
- Locate your water heater close to a drain where water leakage will not do damage to surrounding areas. As with any water heating appliance, the potential for leakage at some time in the life of the product does exist. A drain pan, or other means of protection against water damage, is recommended to be installed under the water heater in case of leaks to lessen the chance of sustaining property damage. In addition, you may install an active water leak detector with a shutoff valve which can turn off the water supply in the event of a leak. The manufacturer is not responsible for damage due to water leaks.
- The water heater shall be securely wall-mounted or mounted on a stand.
- Maintain proper space for servicing. Install the unit so that it can be connected or removed easily. Refer to the "Unit clearances" section page 17 for proper clearances.
- For outdoor installations, locate the water heater in an open , unroofed area. Maintain 3 in. (76 mm) minimum clearance from the left and right sides of the unit.
- The manufacturer does not recommend installing the water heater in an attic due to safety issues. See the installation section for further information.

- Failure to observe these warnings could result in severe personal injury, death, and/or property damage.

Venting/Combustion:

- Do not install the heater where water, debris or flammable vapors may get into the flue terminal. This may cause damage to the heater and void the warranty.
- Do not locate your heater in a pit or location where gas and water can accumulate.
- Do not install the exhaust vent for indoor and outdoor models within 3 ft (914 mm) of an overhang.
- Do not install the unit where the exhaust vent is pointing into any opening in a building or where the noise may disturb your neighbors. Make sure the vent termination meets the required clearance from any doorway or opening to prevent exhaust from entering a building. Check local code requirements prior to installation.
- Vent termination must be at least 2 ft (610 mm) away from both the inside and outside corners for outdoor installation and direct-vent installation.

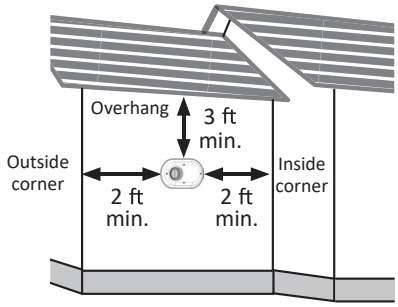

Figure 1 - Sidewall clearances

- Do not install next to a dryer or any source of airborne debris that can be trapped inside the combustion chamber, unless the system is direct-vented. When direct vented, do not install the air intake near the dryer vent or any source of airborne debris.
- Do not common vent this water heater with any other water heaters or appliances.

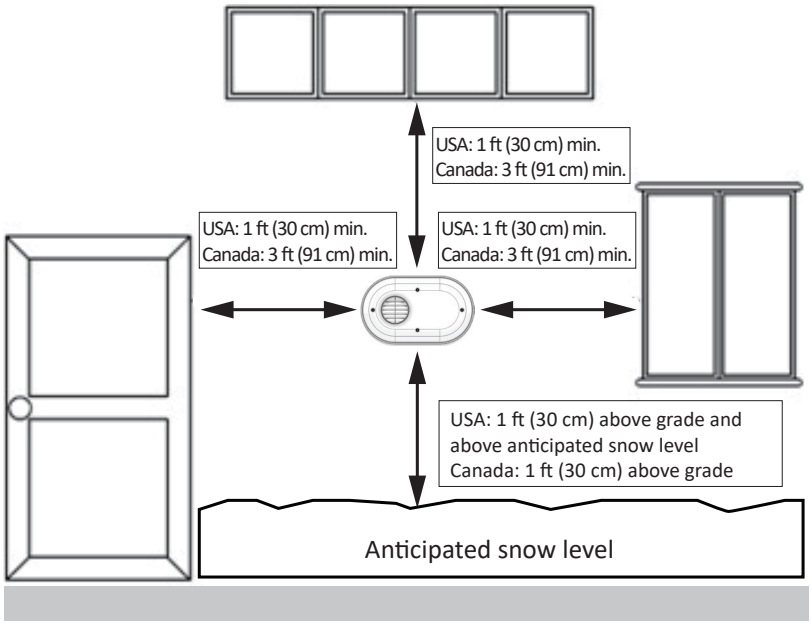

Figure 2 - Minimum Vent Clearances (Indoor)

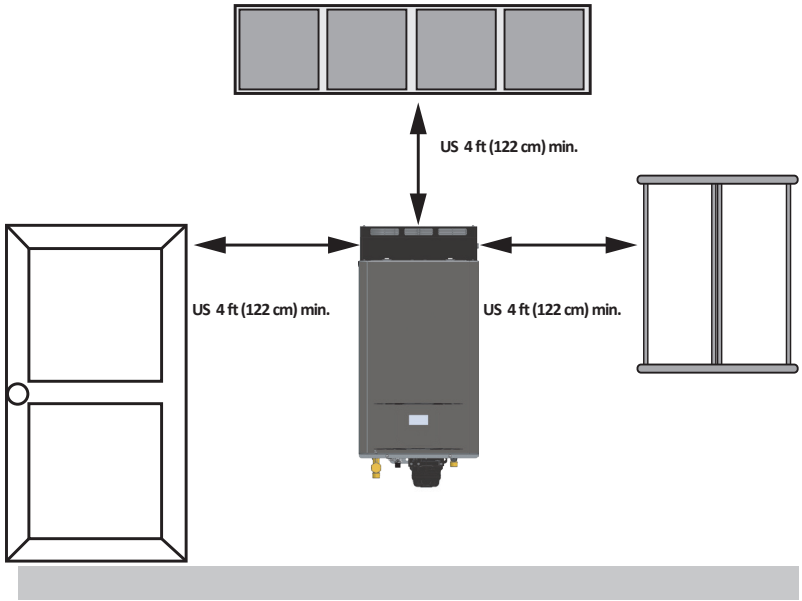

Figure 3 - Minimum Vent Clearances (Outdoor Venting)

4 Before you start, be sure you have the following tools and supplies:

- Plumbing tools and supplies appropriate for the type of water pipes in your building.
- Thread sealant tape or pipe joint compound approved for potable water.
- Pipe dope approved for gas connections or gas tape.
- For buildings with water lines using threaded connectors suitable for the specific type of plastic pipe used: CPVC or PEX (cross-linked polyethylene). Do not use PVC pipe.
- Non-corrosive gas leak detection solution made from hand dishwashing soap mixed with water (1 part soap to 15 parts water) or children's soap bubbles and a small, soft-bristled brush or approved gas leak detection device.
- An appliance dolly or hand truck to move the water heater.

Recommended Accessories

- Automatic water leak detection and shut-off device
- Thermostatic Mixing Valves at each point-of-use
- Fuel gas and carbon monoxide detector

Included Items

Table 4: Items Included with your Water Heater

Item	Description	
Manual	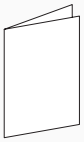	Installation Instructions and Use & Care Guide.
Wall Mounting Bracket	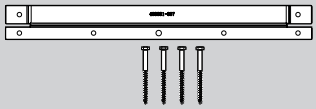	Kit for mounting water heater contains: • Mounting Bracket (1x) • 1/4 in x 3 in Lag Bolts (4x)
Screws for Vent Ports	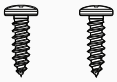	Screws to secure the vent piping to the vent ports. See "Installing the Vent Pipe" on page 23. • 3/16 in x 3/8 in Vent Screw (x2)
Cascading Cable	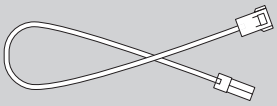	Cascading Cable for electronically connecting tankless water heaters in series for greater output. • P/N 100377343
2 in Bird Screens	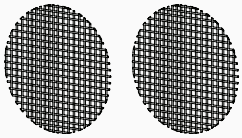	Bird screen to restrict small animals, birds, pests, and other foreign objects from entering the vent system. Kit contains 2 screens sized for 2 in vent elbows.

Available Accessories

Table 5: Accessories available for your Water Heater

Item	Description	
Wi-Fi Module Kit	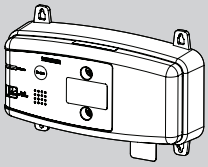	Wi-Fi Module for electronically connecting tankless water heaters to the Internet and adapter to connect to the water heater. • P/N 100371922
Remote Temperature Controller	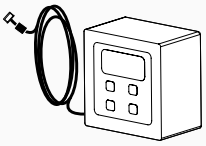	Remote Temperature Controller with 10 ft (3 m) cable. • P/N 100402144
Communication Cables	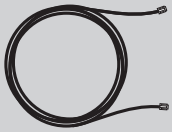	Communication Cable Extensions for Remote Temperature Controller, Wi-Fi Module, or Remote Recirculation Kit. • P/N 100377341 for 10 ft (3 m) • P/N 100377342 for 32 ft (10 m)
Bypass Cartridge Freeze Protection		• Bypass Freeze Protection can add an extra layer of freeze protection to external cartridge. Cartridge not protected by heater's internal freeze protection. P/N 100371918 for Bypass Models
Pipe Cover	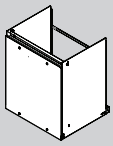	Pipe Cover protects plumbing connections to the heater while improving the appearance of the installation. Affixes to bottom of heater. • P/N 100374697
Non-Return Vent Adapter Kit	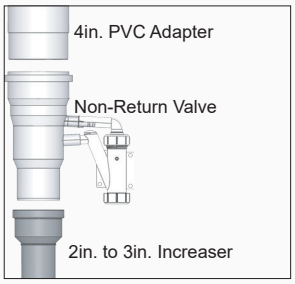	Non-Return Vent Adapter Kit (For Common Vent Installations only) • P/N 100402142.
Neutralizer Assembly Kit		Neutralizer Assembly neutralizes the condensate (acidic water) that forms in the heat exchanger of the water heater. It connects to the condensate drain port of the water heater by using connectors included with the neutralizer kit. • P/N 100112159

GETTING STARTED

Outdoor Vent Cap Kit		Outdoor Installation Kit containing the outdoor vent cap and User Interface overlay. • P/N 100369060
Crossover Valve Kit		Crossover Valve for recirculation systems without a dedicated return line. The kit includes a lead free Stainless/Brass Crossover Valve, Brass Tees and 2 ft. Flex Hose. • P/N 100327167
Isolation Valve Kit with Pressure Relief Valve	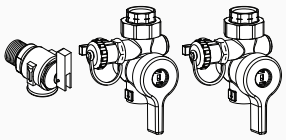	Isolation Valve supports routine maintenance and allows for draining and flushing the heater; whereas, the Pressure Relief Valve, as the name implies, serves to limit internal pressure in the system. • P/N 100112156
X3® Cartridge	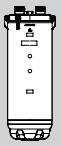	Adds an additional layer of scale prevention to the heater in extreme hard water conditions. Suitable for use in commercial applications as long as the return water temperature does not exceed 120°F. See Table 16 on page 42. • P/N 100368986
X3 Cartridge® Freeze Protection	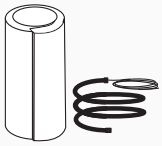	X3 Cartridge Freeze Protection can add an extra layer of freeze protection to external cartridge. (**NOTICE**: cartridge not protected by heaters internal freeze protection) • P/N 100325654 for X3 Cartridge Models
Product Preserver® Cartridge		Can be installed on the cold water line upstream of the tankless heater to add an additional layer of scale prevention. • P/N 100291509 for PP-AS20 Anti-Scale System • P/N 100291510 for PP-AS20R Replacement Cartridge
Bypass Cartridge Screws		Screws to secure the Bypass Cartridge • M4-12 mm (1x) • M4-25 mm (2x)

Installation Environment

Proper mounting and clearance

The water heater shall be securely mounted on a wall that can support the weight of the water heater. A wall mounting bracket is supplied with the water heater to securely mount the water heater to wall studs. The water lines, gas line, condensate drain line, and pressure relief valve discharge line shall be supported using field supplied pipe hangers. The water heater shall not bear the weight of these lines. The water heater requires proper installation clearance for operation and service as described in Unit Clearances section.

⚠ Warning! The installer (licensed professional) is responsible for the correct installation of the water heater and for compliance with all national, state/provincial, and local codes.

Atmosphere temperature

Install the water heater in a heated area where below freezing temperatures cannot occur. A pipe cover is recommended when the water heater is installed outdoors because it provides better protection from the elements. The warranty does not cover damage caused due to freezing. See "Freeze Protection System" on page 60.

Combustion air supply

The water heater requires fresh combustion air and should be free of corrosive elements and flammable vapors. Direct venting installation is required when corrosive elements and flammable vapors are present in the room air.

Proper ventilation

For proper operation the water heater must be vented in accordance with the section "Venting" of the current edition of the ANSI Z223.1/NFPA 54, National Fuel Gas Code in the United States and/or Section 8 of the B149.1, Natural gas and propane installation code in Canada, as well as applicable local building codes.

Condensate Drain line

The condensate produced is acidic. Drain the condensate in accordance with all local codes and common safety practices.

Unit Clearances

⚠ Warning! Maintain all clearances around the water heater. Failure to do so could create a fire hazard, potentially leading to death, serious injury, and/or property damage.

Indoor

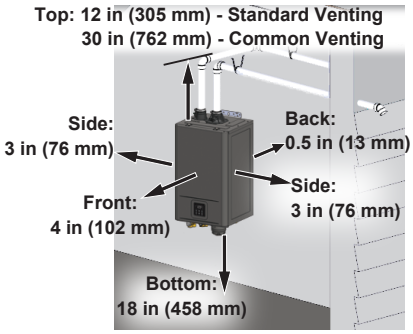

Figure 4 - Indoor Clearances

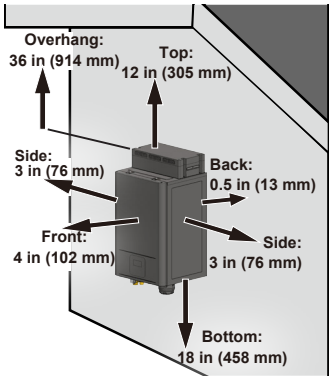

Figure 5 - Outdoor Clearances

It is recommended that the front should have 24 inches (610 mm) of clearance for maintenance.

Mounting the Water Heater

1. Secure the wall mounting bracket with the four supplied lag bolts to the wall studs. See Figure 6. DO NOT secure to the drywall only. NOTICE: The supplied fasteners are for wood studs only. When mounting on any other surface use fasteners approved for that wall material/construction. Make sure to level the bracket.

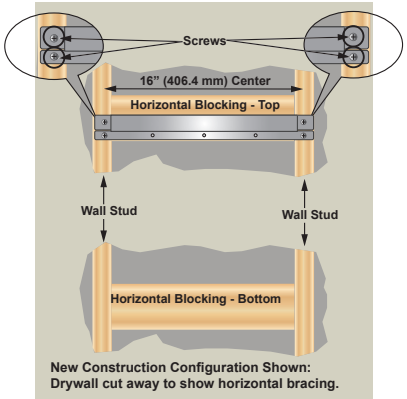

Figure 6 - Wall bracket installation.

1. Hang the water heater on the wall bracket. See Figure 7.

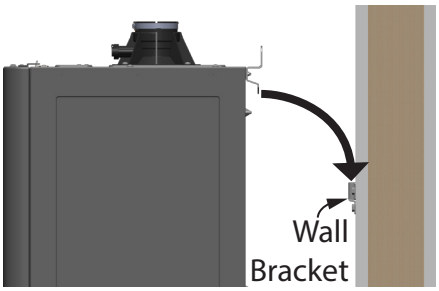

Figure 7 - Mounting the water heater.

2. Secure the water heater firmly fastening appropriate screws into the upper bracket/bottom brackets of the water heater and wall. NOTICE: these screws are not provided.

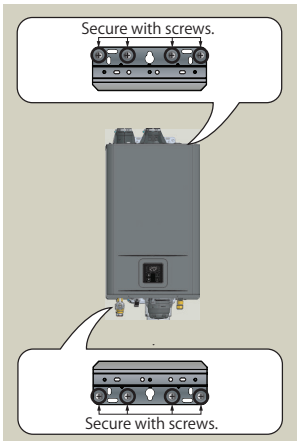

Figure 8 - Use mounting screws.

Combustion Air and Venting Installation

Combustion Air

Before installing the water heater, you must determine the amount of air needed to supply this water heater and any other gas appliances in the same area and provide adequate air for combustion and ventilation. This section does not apply if the water heater is direct vented. Consult a qualified person if you're unsure of the proper way to supply air to your water heater.

⚠ WARNING! This gas water heater requires an adequate source of clean air for combustion and ventilation. Without sufficient air, your water heater will have frequent outages and may emit excessive and abnormal amounts of carbon monoxide.

Before beginning:

Calculate total Btu/hr rating of all appliances.

To calculate the combustion air and ventilation required, add up the total Btu/hr ratings of all gas burning appliances (e.g., water heaters, furnaces, clothes dryers) in the same area.

Your water heater's Btu/hr rating is on the rating plate, located on the side of the water heater. The Btu/hr ratings should be on the other appliances' data plates. If you have trouble determining the Btu/hr ratings, contact the manufacturer or have a qualified person determine the ventilation requirements.

NOTICE: If you are replacing your old water heater with one that has a higher Btu/hr rating, the amount of ventilation required may be greater.

Example:

Gas Burning Appliance	Btu/hr Rating
Gas Water Heater	199,000
Furnace	75,000
Dryer	20,000
Total	294,000

Your Appliances:

Gas Burning Appliance	Btu/hr Rating
Gas Water Heater	
Total	

Option A: Installation without outside ventilation (not recommended)

Ventilation with outdoor air is recommended for all installations. Even if the water heater is installed in a large, open room inside the building, outdoor air is usually needed because modern buildings are very tightly sealed and often do not supply enough air to the water heater. However, when installed in a large indoor space, it may be possible to provide enough air without outside ventilation. If you are unsure if your installation location has enough ventilation, contact your local gas utility company or code officials for a safety inspection.

The following instructions will help determine if it may be possible to install without outside ventilation. If there is not enough ventilation, you will need to ventilate with outside air.

Check for Chemicals:

Installations where corrosive chemicals may be present require outside air. Air for combustion and ventilation must be clean and free of corrosive or acid-forming chemicals such as sulfur, fluorine, and chlorine. Ventilation with outside air will reduce these chemicals, but it may not completely eliminate them. Failure due to corrosive chemicals is not covered by the warranty. Examples of locations that require outside air due to chemicals include:

- Beauty salons
- Photo processing labs
- Indoor pools
- Laundry, hobby, or craft rooms
- Chemical storage areas

Products such as aerosol sprays, detergents, bleaches, cleaning solvents, gasoline, air fresheners, paint and varnish removers, and refrigerants should not be stored or used near the water heater.

A1: Calculate the air volume of the room

Air requirements depend on the size of the room.

Floor Area (square feet) x Ceiling Height (feet) = Room Volume (cubic feet)

If there are large objects in the room (e.g., refrigerator, furnace, car), subtract their volume from the volume of the room to get a better estimate of the air available.

Room Volume – Object Volume = Air Volume

A2: Calculate required air volume

A water heater installed in an unconfined space, such as an attic or garage, requires that the space be at least 50 cubic feet per 1,000 Btu/hr of the total input for all gas burning appliances in the same area.

[Total Btu/hr/1000] x 50 = Cubic feet of air required.

Example:

(294,000 / 1000) x 50 = 14,700

If the air volume of the room is less than the required air volume, you must provide two permanent outside air openings that draw in sufficient air. Use Option B.

If the air volume of the room is greater than the required air volume, it may be possible to install the water heater without outside ventilation.

A3: Check that combustion ventilation is adequate

Because modern buildings are often well-sealed to prevent drafts, a large room may not provide enough combustion air without ventilation. Confirm that your installation has enough combustion air.

Option B: Installation with outside ventilation

Ventilation with outside air is recommended, and, for most installations, is needed. There may be existing ventilation that is adequate, or you may need to add more ventilation.

Supplying outside air typically requires two openings. One opening must be within 12 inches from the floor and the second opening must be within 12 inches from the ceiling. Although a single opening is not preferred, you may use a single opening to outside air if the minimum free area is sized according to Table 6. Two openings must be used when ventilating with air from another room.

B1: Determine type of ventilation

There are several types of ventilation that can be used:

1. Direct to outdoors
2. Vertical ducts
3. Horizontal ducts
4. Single opening (not recommended); must be at least 100 square inches. Not appropriate for confined spaces smaller than 50 cubic feet per 1,000 Btu/hr as calculated in section A or when getting air from another room.
5. From a larger room inside the building (not recommended — refer to section A to determine if the combined volume of the room may be adequate)

B2: Determine minimum free area required for each vent opening

The size of the vent openings depends on the total Btu/hr rating of all appliances in the space (use your calculation from “Before Beginning”) and the type of vent used. Table 6 provides the minimum free area for each vent opening depending on the type of ventilation.

B3: Calculate minimum size of vent openings and ducts

The vent cross-sectional area needed to provide the free area depends on the covering on the vent openings. Typical vents use louvers or grilles to protect the opening. The louver or grille itself blocks some of the free area, so the opening may need to be larger to meet the minimum free area requirements.

Use the following formula to calculate the required cross-sectional area:

Cross-sectional area = minimum free area required ÷ percent free area of covering (in decimals – e.g., 60% = .6)

For example, an installation area that requires openings with 100 square inches of free area would need 134 square inch openings if using metal louvers rated at 75% free area (100 sq in ÷ .75 = 134 sq in).

If you do not know the % (percentage) free area for your louver or grille, use the following values:

- For wood louvers or grilles: 20%
- For metal louvers or grilles: 60%

Follow these rules to ensure that vents and ducts provide adequate air flow:

- Each vent opening must be no smaller than 100 square inches.
- Ducts must have the same cross-sectional area as free area of the opening.
- Rectangular ducts must have a minimum dimension of no less than three inches.
- All screens must have mesh ¼ in or larger.
- Movable louvers must be locked open or interconnected with the equipment so that they open automatically during operation.
- Keep louvers and grilles clean and free of debris or other obstructions.

B4: Check that air source is clean and free of chemicals

Air for combustion and ventilation must be clean and free of corrosive or flammable chemicals. A failure due to corrosive chemicals in the air is not covered by the warranty. Combustion air must be free of acid-forming chemicals such as sulfur, fluorine, and chlorine. Be sure that air at the vent inlets is free of such chemicals.

B5: Check that combustion ventilation is adequate

To confirm that your installation has enough combustion air.

Combustion Air Supply Options

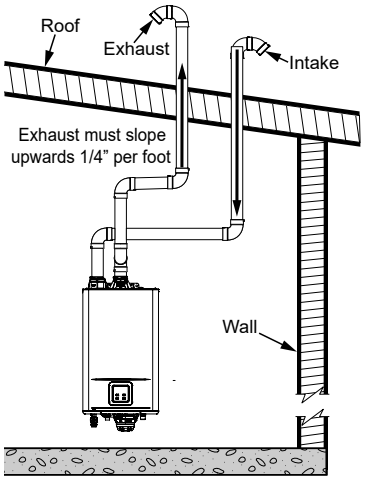

Figure 9 - Direct Vent Vertical Installation

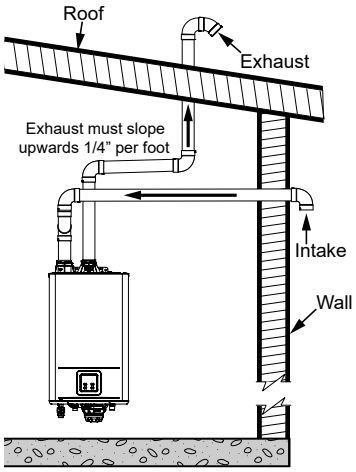

Figure 10 - Direct Vent Vertical/Horizontal Installation

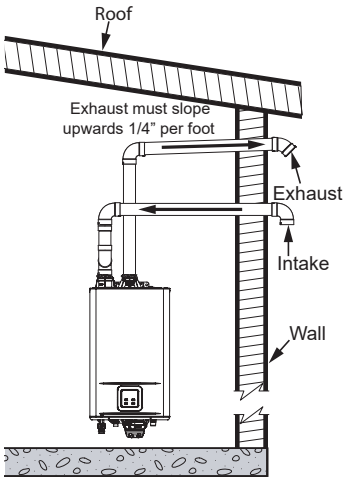

Figure 11 - Direct Vent Horizontal Installation

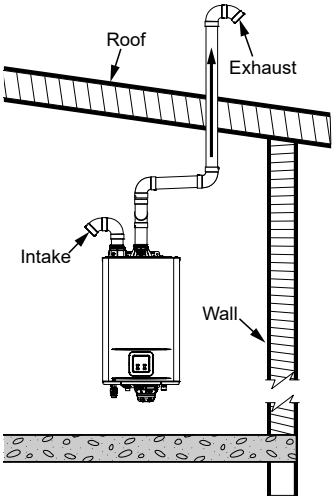

Figure 12 - Indirect Vent Vertical Installation

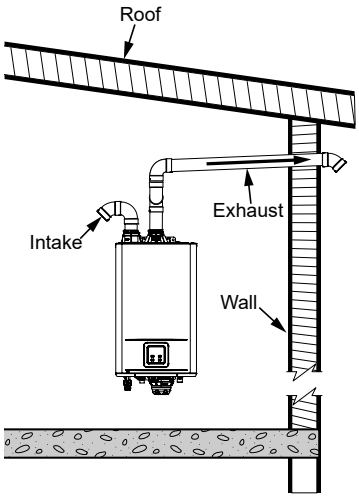

Figure 13 - Indirect Vent Horizontal Installation

Table 6: Minimum Free Area of Permanent Openings for Ventilation and Combustion Air Supply – Air from outdoor or indoor spaces. Based on the total Btu/hr input rating for all gas burning appliances within a confined space.	
Opening Source	Minimum Free Area
Direct to outdoors*	1 in^2 (6.5 cm^2) per 4,000 Btu/hr
Vertical ducts	1 in^2 (6.5 cm^2) per 4,000 Btu/hr
Horizontal ducts	1 in^2 (6.5 cm^2) per 2,000 Btu/hr
Single Opening	1 in^2 (6.5 cm^2) per 3,000 Btu/hr
Two permanent openings to another room**	1 in^2 (6.5 cm^2) per 1,000 Btu/hr Opening: 100 in^2 (645 cm^2) Min Minimum dimension of air openings: no less than 3 in (76 mm)
*These openings connect directly with the outdoors through a ventilated attic, a ventilated crawl space, or through an outside wall. **United States: For direction on combining spaces in different stories within the structure, refer to the current edition of the National Fuel Gas Code ANSI Z223.1/NFPA 54. In Canada, refer to the current edition of B149.1 Natural gas and propane installation code.	

Venting

⚠ WARNING! Carbon Monoxide Hazard. This water heater must be supplied with adequate air and vented to outdoors. The vent system must be installed by a qualified person. Examples of a qualified person include gas technicians, authorized gas company personnel, and authorized service technicians. Failure to properly vent the water heater can result in severe injury or death from carbon monoxide poisoning.

This vent system must be installed in accordance with the current edition of ANSI Z223.1/NFPA 54, National Fuel Gas Code in the USA or B149.1, Natural gas and propane installation code in Canada, as well as applicable local building codes.

The use of venting materials approved for Category III/IV appliances is recommended whenever possible. However, this model may also be vented with plastic pipe materials such as ABS, PVC (solid core), CPVC (solid core), or polypropylene. For details, please refer to the Exhaust Vent (ABS, PVC, CPVC, or Polypropylene Vent) Section on page 23. Vent installations in Canada which utilize plastic vent systems must use venting that is certified to ULC S636.

Venting may not intermingle with other manufactured material types, other than approved adapters.

General rules for venting water heaters:

This water heater is designed as a Category IV, positive vented static pressure water heater (vent gas temperatures may cause excessive condensate production in the vent,) which takes its combustion air from the air ducted to the unit from the outside.

- Follow the vent pipe manufacturer's installation instructions when installing the vent pipe.
- Place the water heater as close as possible to the vent termination.
- The vent collar of the water heater must be fastened directly to an unobstructed vent pipe.
- Do not cut or alter the vent collar of the unit.
- The vent must be easily removable from the top of the water heater for normal service and inspection of the unit.
- For single venting installations use 2 inch or 3 inch vent piping. For common venting 4 inch vent piping must be used.
- The water heater vent must not be common vented to any other gas appliance or vent stack.
- Air supply pipe can be made of ABS, PVC (solid core), CPVC (solid core), polypropylene, or Category III/IV stainless steel.
- Use of cellular core PVC (ASTM F891), cellular core CPVC, or Radel® (polyphenylsulfone) in nonmetallic venting systems is prohibited
- Covering non-metallic vent pipe and fittings with thermal insulation is prohibited.
- Sidewall venting is recommended for the Indoor model. Vertical venting (roof termination) is acceptable.
- The manufacturer recommends running the exhaust vent and the intake pipe as parallel as possible.
- For rooftop venting, a rain cap or other form of termination that prevents rain water from entering into the water heater must be installed.
- Do not terminate vent into a chimney. If the vent must go through the chimney, the vent must run all the way through the chimney with approved vent pipe.
- The water heater shall not be connected to a chimney flue serving a separate appliance, designed to burn solid fuel.

General rules for vent terminations:

- Avoid locating the water heater vent termination near any air intake devices. These fans can pick up the exhaust flue products from the water heater and return them to the building. This can create a health hazard.
- Locate the vent termination so that it cannot be blocked by any debris, at any time. Most codes require that the termination be at least 12 in (305 mm) above grade and anticipated snow level, but the installer may determine if it should be higher depending on the job site condition and applicable codes.
- A proper sidewall termination is recommended when the water heater is vented through a sidewall.
- Check the clearances from the exhaust termination to the air inlet or opening.
- To reduce the risk of carbon monoxide poisoning, install a fuel gas and carbon monoxide detector. Install and maintain the detector in accordance with the manufacturer's instructions and local codes.

Replacing a Water Heater Using the Existing Vent System

⚠ WARNING! Improper venting of this appliance can result in excessive levels of carbon monoxide which can result in severe personal injury or death. Improper installation can cause nausea or asphyxiation, severe injury or death from carbon monoxide and flue gases poisoning. Improper installation will void product warranty.

Do not use Category I or Category II venting systems with this water heater.

If existing venting and vent terminations are used, they MUST be cleared of ALL restrictions for proper operation, such as a restricter plate.

Read the "Installing Vent Pipe" section of this manual and make sure your vent system is properly installed. Inspect the existing vent system for obstructions, corrosion, and proper installation. Repair or replace if necessary.

Table 7: Plastic Vent Pipe Table

Item	Material	United States	Canada
Exhaust pipe* and Fittings	Schedule 40 PVC	ANSI/ASTM D1785	ULC S636 Certified Materials Only
	PVC-DWV	ANSI/ASTM D2665	
	Schedule 40 CPVC	ANSI/ASTM F441	
	Schedule 40 ABS-DWV	ANSI/ASTM D2661	
	Polypropylene	UL-1738	
Pipe Cement/Primer	PVC	ANSI/ASTM D2564	
	CPVC	ANSI/ASTM F493	
	ABS	ANSI/ASTM D2235	
Use of cellular core PVC (ASTM F891), cellular core CPVC, or Radel® (polyphenylsulfone) in non-metallic venting systems is prohibited. Covering non-metallic vent pipe and fittings with thermal insulation is prohibited.			

NOTE: Approved vent and air intake Polypropylene vent materials: Centrotherm InnoFlue® Single Wall Vent System

*NOTE: This product is set to use PVC as the default vent pipe material. If the return water temperature for the application is higher than 140°F (60°C) to circulate back to the water heater, C08 must be set to '1'. Otherwise, the water heater will control maintain the exhaust and DHW temperatures below 149°F (65°C) and 140°F (60°C) respectively. Note When C08 is set to '1' (factory default is '0'), CPVC, PP, or SS vent must be used for the exhaust pipe.

Table 8: Vent Pipe Lengths

No. of Elbows	Max. Vertical or Horizontal (Total) Vent Length	
	2 in venting	3 in venting
0	75 ft (22.9 m)	150 ft (45.7 m)
1	70 ft (21.3 m)	145 ft (44.2 m)
2	65 ft (19.8 m)	140 ft (42.7 m)
3	60 ft (18.3 m)	135 ft (41.1 m)
4	55 ft (16.8 m)	130 ft (39.6 m)
5	50 ft (15.2 m)	125 ft (38.1 m)

Excludes vent terminators, termination elbows, or rain caps.
For details on the vent connection, refer to "Installing the Vent Pipe" on page 23.
For each 90 degree elbow added, deduct 5 ft. 45 degree elbows count as 2.5 feet.

Installing the Vent Pipe

⚠ WARNING! Improper installation can cause nausea or asphyxiation, severe injury or death from carbon monoxide and flue gases poisoning. Improper installation will void product warranty

- When inserting the pipe into the exhaust/intake port, make sure that the pipe end is cut straight and positioned properly under the o-ring to seal the connection firmly.
- Improper venting of this appliance can result in excessive levels of carbon monoxide which can result in severe personal injury or death.

Vent Piping

1 For single pipe venting insert 2 in diameter straight pipe fully into the exhaust/intake connection ports until fully seated (See Figure 14). The pipes will insert at a minimum of 1.5 inches.
NOTICE: For Common Venting installations see "Common Venting" on page 28.

⚠ WARNING: The exhaust vent pipe connection to the water heater must be flush to maintain a proper seal. Check pipe for a 90° edge before installation. DO NOT use a field cut end for the connection. Failure to follow can cause carbon monoxide poisoning or death.

NOTICE: For 3 in Venting, install a 2 in x 3 in increaser to convert to 3 in venting. For low clearance installations, a 2 in long sweep elbow may be used. Then 12 in max length straight pipe may be used to fit a 2 in x 3 in increaser.
Air Intake for Power Vent Installs: Insert the male end of a 2 in long sweep street elbow into the heater's air intake port.

2 Use a screwdriver to tighten the clamp. (See Figure 14)

3 Use the supplied self-tapping screws to secure the venting to the intake and exhaust ports as shown in the image on the right. (See Figure 14)

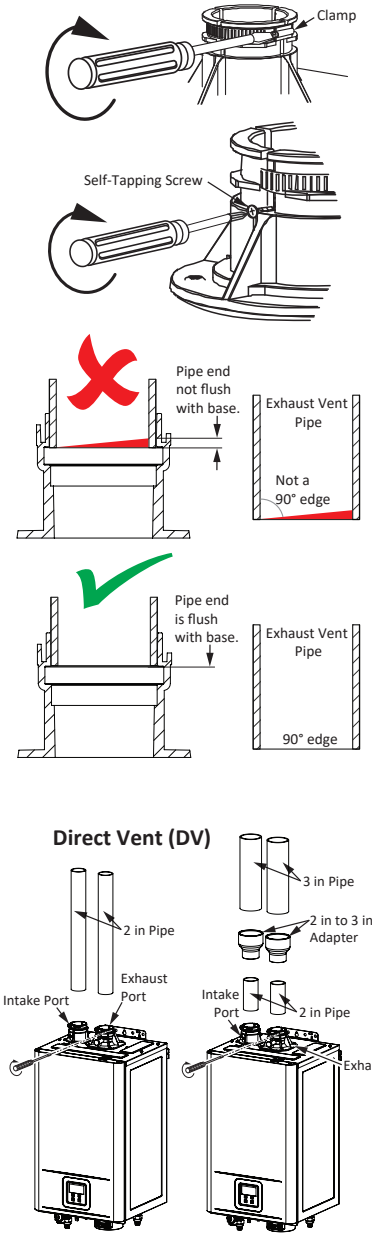

Figure 14 - Vent Pipe Installation

Exhaust Vent for Indoor Installation

ABS, PVC, CPVC or polypropylene vent

This model can be vented with ABS, PVC, CPVC, or polypropylene (temperature rated up to 149°F). In Canada, plastic venting must be certified to ULC S636.

- The maximum length of exhaust venting or intake piping shall not exceed the lengths listed in Table 8.
- Do not use more than five elbows in a vent system. For every 90 degree elbow added, deduct five feet and 45 degree elbows count as 2.5 ft. If an elbow(s) is used in the vent system, deduct each equivalent length from the Max. vent length to decide the total vent length.
- When the horizontal vent run exceeds 5 ft (1.5 m), support the vent run at 3 ft (0.9 m) intervals with overhead hangers.
- In areas of high rainfall the installation of the rain trap may be necessary.
- Slope horizontal venting sections 1/4 in (6 mm) upwards for every 12 in (305 mm) toward the termination or according to local and state codes, or in the absence of local or state/provincial codes, the current edition of the ANSI Z223.1/NFPA 54, National Fuel Gas Code or B149.1, Natural gas and propane installation code.
- Do not use tight 90° elbows. Standard and long sweep elbows are acceptable. See Figure 15.

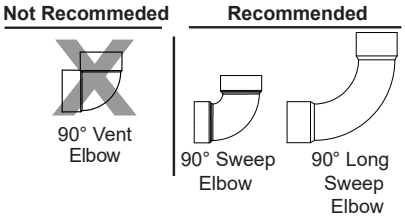

Figure 15 - Correct/Incorrect Elbows

Typical Venting Configurations:

The following are typical single venting configurations examples.

Direct Vent Horizontal Installation Examples

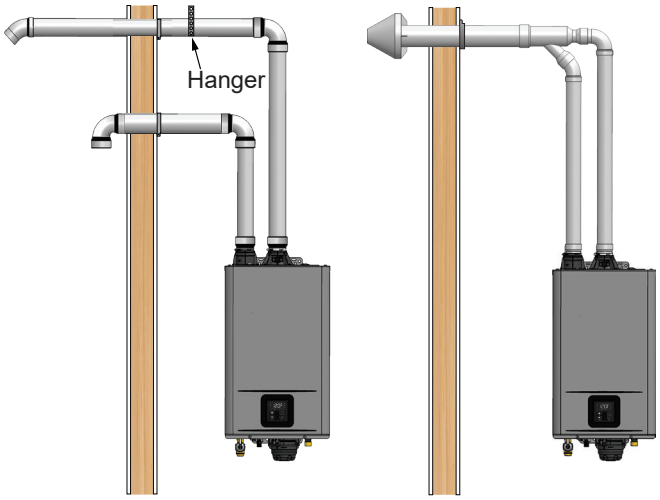

Direct Vent Vertical Installation Examples

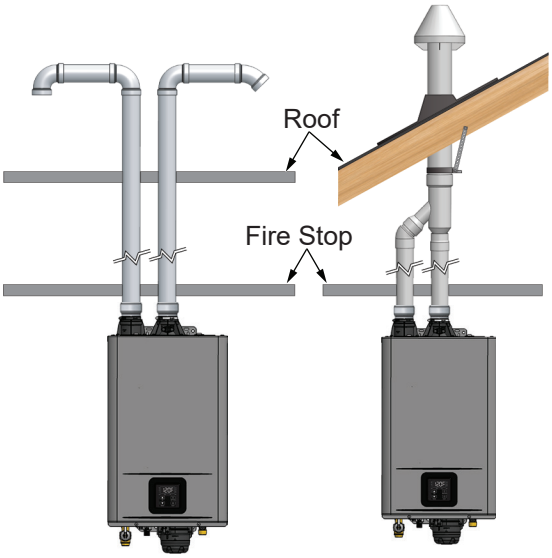

Figure 16 - Vent Configuration Examples for Direct Vent

Table 9: - Vent Terminations

LOW PROFILE TERMINATION

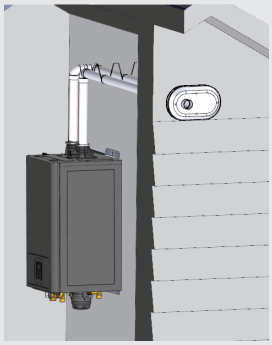

If used in vertical position, the exhaust port must be placed in the upper side.

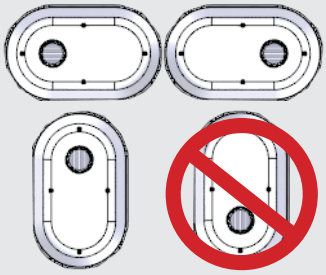

Vent Pipe Size	PVC Kit Number	IPEX PVC Part Number	IPEX System 1738® PVC Part Number
2 in	100187903	196984	397984
3 in	100187887	196985	397985

CONCENTRIC TERMINATION

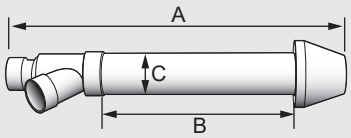

	A	B	C
FGV 2"	29″	16"	2"
FGV 3"	36″	20"	3"

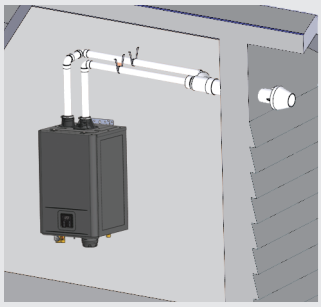

Vent Pipe Size	PVC Kit Number	IPEX PVC Part Number	IPEX System 1738® PVC Part Number	IPEX System 636® CPVC Part Number
2 in	100112869	196005	397005	197040
3 in	100112163	196006	397006	197006

POLYPROPYLENE CONCENTRIC TERMINATION

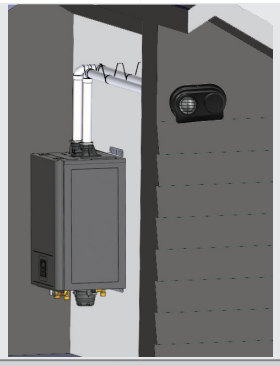

Vent Pipe Size	Centrotherm Part Number
2 in	ISLPT0202
3 in	ISLPT0303

POLYPROPYLENE TERMINATION TEE	
Vent Pipe Size	**Centrotherm Part Number**
2 in	ISTT0220
3 in	ISTT0320
POLYPROPYLENE RADIUS ELBOWS	
Vent Pipe Size	**Centrotherm Part Number**
2 in 45° EXHAUST ELBOW	ISELS0245UV
3 in 45° EXHAUST ELBOW	ISELS0345UV
2 in 87° INLET ELBOW	ISELS0287UV
3 in 87° INLET ELBOW	ISELS0387UV
POLYPROPYLENE CONCENTRIC WALL TERMINATION	
Vent Pipe Size	**Centrotherm Part Number**
2 in	ICWT242*
3 in	ICWT352*
*Consult the vent manufacturer for approved concentric / twin pipe adaptors	

Vent Termination Clearances

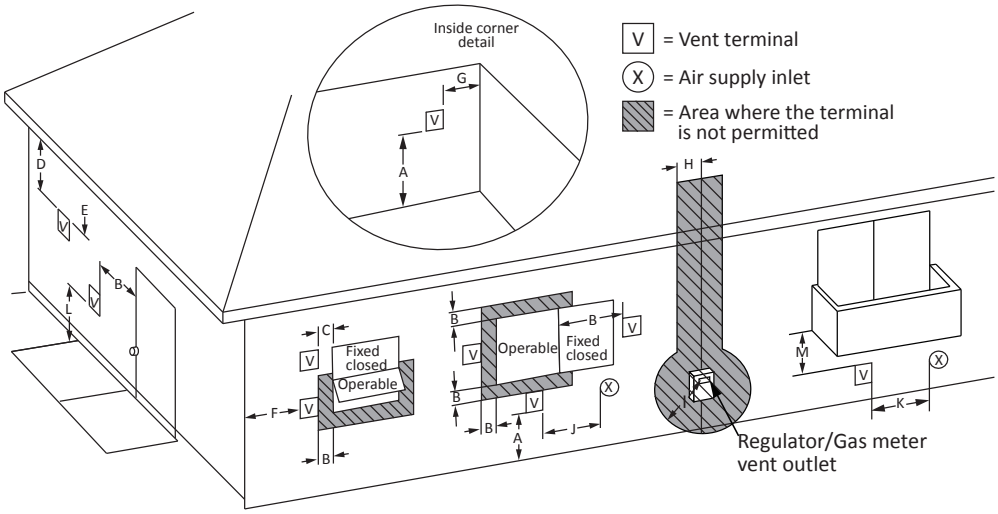

		Canada Installations[1]	US Installations[2]	
		Direct vent and other than direct vent	Direct vent	Other than direct vent
A	Clearance above grade, veranda, porch, deck, or balcony	1 ft (30 cm)	1 ft (30 cm)	
B	Clearance to window or door that may be opened	3 ft (91 cm)	1 ft (30 cm)	4 ft (1.2 m) below or to side of opening; 1 ft (30 cm) above opening
C	Clearance to permanently closed window	0	0	0
D	Vertical clearance to ventilated soffit located above the vent terminator within a horizontal distance of 2 feet (61cm) from the center line of the termination	3 ft (91 cm)	3 ft (91 cm)	3 ft (91 cm)
E	Clearance to unventilated soffit	3 ft (91 cm)	3 ft (91 cm)	3 ft (91 cm)
F	Clearance to outside corner	2 ft (61 cm)	2 ft (61 cm)	2 ft (61 cm)
G	Clearance to inside corner	2 ft (61 cm)	2 ft (61 cm)	2 ft (61 cm)
H	Clearance to each side of center line extended above meter/regulator assembly	3 ft (91 cm)	*	*
I	Clearance to service regulator vent outlet	Above a regulator within 3 ft (91 cm) horizontally of the vertical center line of the regulator vent outlet to a maximum vertical distance of 15 ft (4.5 m)	*	*
J	Clearance to non-mechanical air supply inlet to a building or the combustion air inlet to any other appliance.	3 ft (91 cm)	1 ft (30 cm)	4 ft (1.2 m) below or to side of opening; 1 ft (30 cm) above opening
K	Clearance to mechanical air supply inlet	6 ft (183 cm)	3 ft (91 cm) above if within 10 ft (3 m) horizontally.	
L	Clearance above paved sidewalk or paved driveway located on public property	7 ft (213 cm)**	7 ft (213 cm)	7 ft (213 cm)
M	Clearance under veranda, porch deck, or balcony	1 ft (30 cm)***	1 ft (30 cm)***	1 ft (30 cm)***

*Clearance in accordance with local installation codes and the requirements of the gas supplier.
**A vent shall not terminate directly above a sidewalk or paved driveway that is located between two single family dwellings and serves both dwellings.
***Permitted only if veranda, porch, deck, or balcony is fully open on a minimum of two sides beneath the floor.

The vent for condensing water heaters shall not terminate:

- over public walkways; or
- near soffit vents or crawl space vents or other areas where condensate or vapor could create a nuisance or hazard or cause property damage; or
- where condensate vapor could cause damage or could be detrimental to the operation of regulators, relief valves, or other equipment.

Notes:

1) *In accordance with the current CSA B149.1,* Natural Gas and Propane Installation Code
2) *In accordance with the current ANSI Z223.1/NFPA 54*, National Fuel Gas Code

Common Venting

⚠ WARNING! Carbon Monoxide Hazard. This water heater must be supplied with adequate air and vented to outdoors. The vent system must be installed by a qualified person. Examples of a qualified person include gas technicians, authorized gas company personnel, and authorized service technicians. Failure to properly vent the water heater can result in severe injury or death from carbon monoxide poisoning.

The Indoor model must be vented in accordance with the current edition of ANSI Z223.1/NFPA 54, National Fuel Gas Code in the USA or B149.1, Natural gas and propane installation code in Canada, as well as applicable local building codes.

- The Indoor model can be vented together using the same exhaust and intake venting in a common venting configuration. Direct venting must be used in this configuration. DO NOT use indirect venting.
- The use of venting materials approved for Category III/IV appliances is recommended whenever possible. However, the Indoor model may also be vented with plastic pipe materials such as ABS, PVC (solid core), CPVC (solid core), or polypropylene. For details, please refer to the Exhaust Vent (ABS, PVC, CPVC, or Polypropylene Vent) Section on page 23. Vent installations in Canada which utilize plastic vent systems must use venting that is certified to ULC S636.
- Venting may not intermingle with other manufactured material types, other than approved adapters.
- A non-return valve (100402144) must be used for each water heater that is part of the common vent system. See"Non-Return Vent Adapter" on page 32.
- ANSI Z223.1/NFPA 54 and/or B149.1, Natural Gas and Propane Installation Code (Current Editions), local codes, and the venting manufacturer's instructions.
- For common-venting pieces and components, the manufacturer recommends Centrotherm's vent line.

Common vented unit must be connected using the Cascading/Easy Link cable. To casacade units the follow parameters must be set C13 and C14 in configuration mode (C Mode), see page 56.

Set C19 to 1 see page 56.

The following figures are examples of typical common venting installation options.

To calculate the maximum vent length use the following instructions.

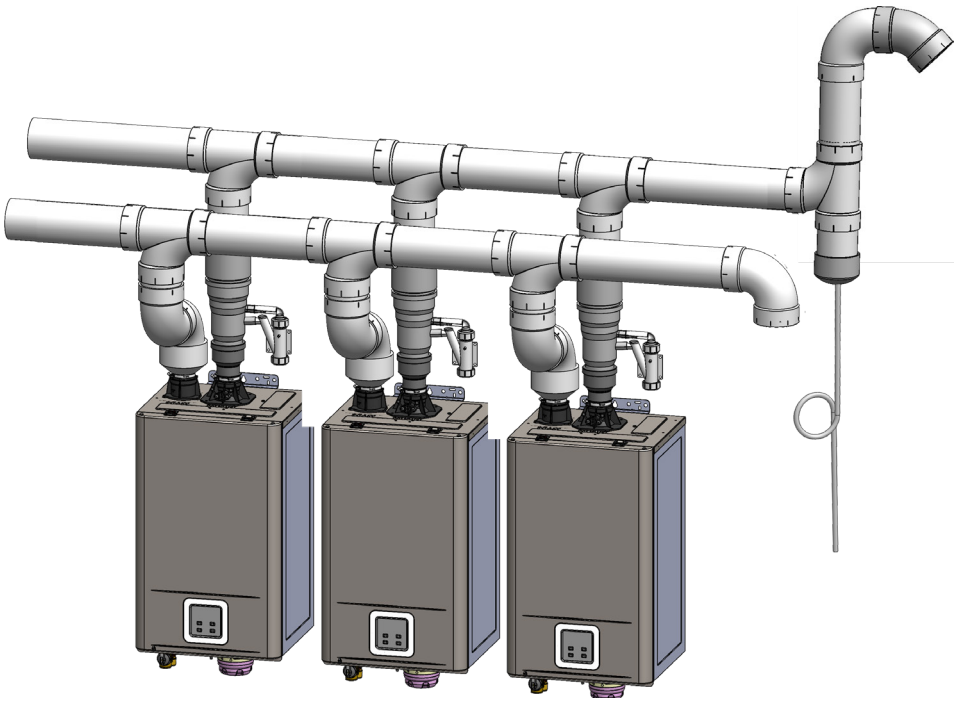

Figure 17 - Typical Common Vented Installation

Table 10: - Common Vent Fittings (Tees, Elbows, and Terminations)

Description	Termination	Horizontal	Vertical	Equivalent Lengths (ft)
Tee	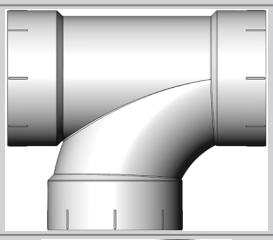	YES	YES	8 ft
90° Elbow	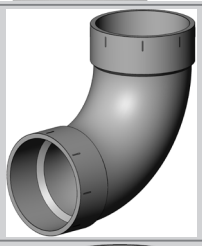	YES	YES	8 ft
45° Elbow	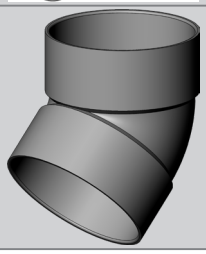	YES	YES	5 ft

Table 11: Allowable Maximum Vent Length (AMVL)

			Main Vent Header Diameter			
			4"	6"	8"	10"
No. of Tankless Heater Units	Maximum BTU/Hr*	Minimum BTU/HR with cascading	Allowable Maximum Vent Length (AMVL) for Common Vented units (Feet)			
2	398000	9,000	105	150	X	X
3	597000	9,000	80	150	X	X
4	796000	9,000	65	150	X	X
5	995000	9,000	X	140	X	X
6	1194000	9,000	X	125	150	X
7	1393000	9,000	X	105	120	X
8	1592000	9,000	X	85	120	150
9	1791000	9,000	X	70	95	135
10	1990000	9,000	X	50	80	120
11	2189000	9,000	X	X	X	105
12	2388000	9,000	X	X	X	90

*The common vented unit must be connected using Cascade/Easy Link cable. Refer to parameter C13 and C14 to cascade the multiple units, see page 56.
*Set C19=1, see page 56.
* Do not common vent different types of tankless water heaters.

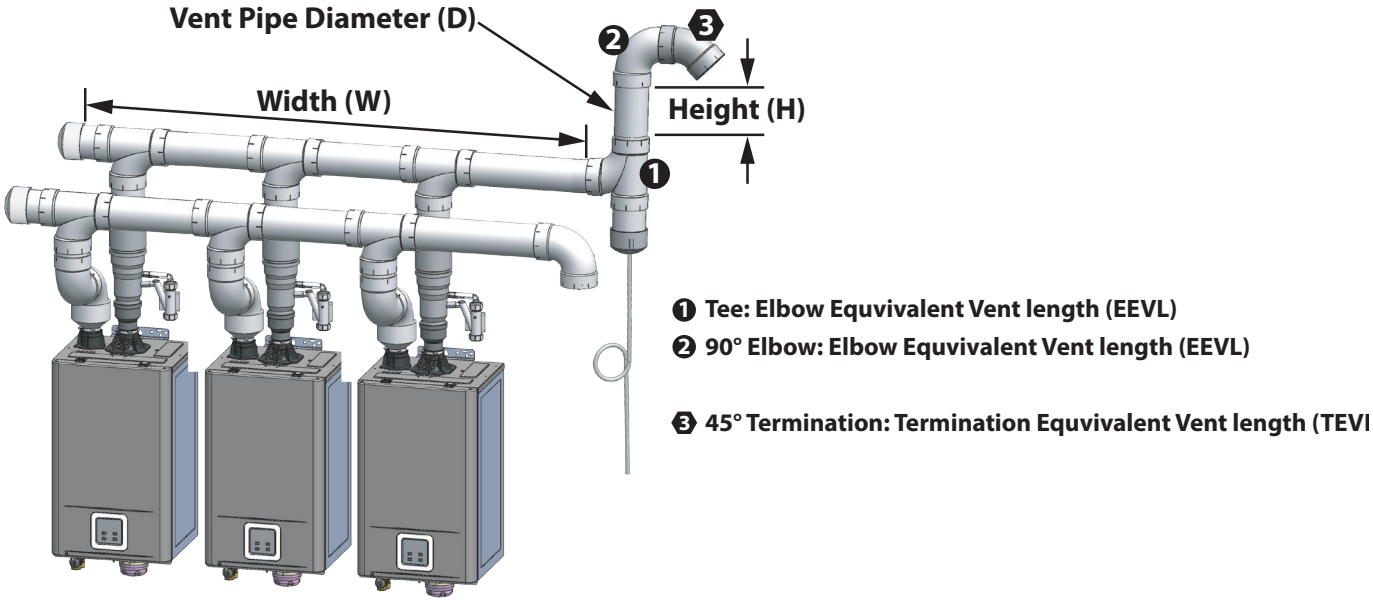

EXAMPLE:

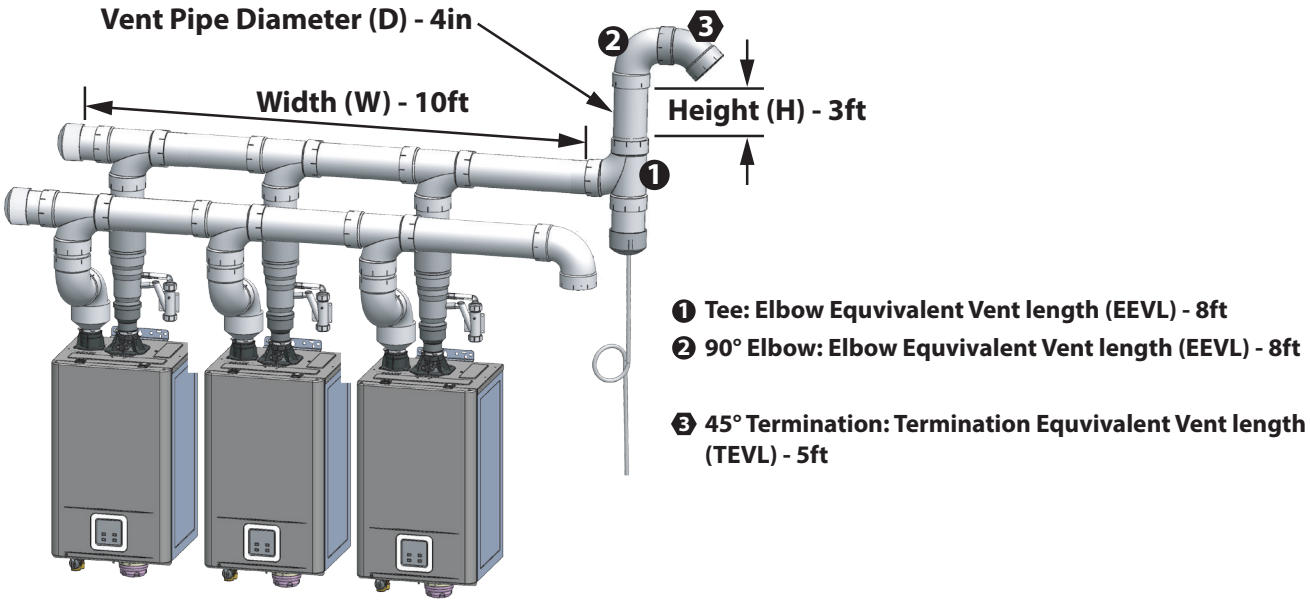

BTU Rating for each Unit in Cascade - 199,000 per unit.

Figure 18 - Maximum Allowable Vent Length

Maximum Vent Length Formula

Calculating the Maximum Vent Length Formula requires the summation of 3 component variables then comparing them to the values in Table 11. The calculated vent length must be under the maximum amount in the table. Use the steps below to make the calculations and record the values in the following table.

1. Calculate and record the Straight Vent Length (SVL) = Width (W) + Height (H)
2. Calculate and record the Elbow Equivalent Vent Length (EEVL) = Sum of elbow equivalent lengths in vent system. (See Table 10 for component lengths)
3. Record the Termination Equivalent Vent Length (TEVL) = Termination equivalent length in vent system. (See Table 10 for component lengths)
4. Record Vent Pipe Diameter (VPD) = Diameter of Vent Piping.
5. Record the number of units in the Cascade system.
6. Calculate and record the total BTU/H by adding the BTU rating of all heaters in the Cascade system.
7. Compare the information in the table below with Table 11 to see if the configuration is within the allowable length.

Straight Value Length (SVL)	(W) 10ft + (H) 3ft =	13ft (SVL)

Elbow Equivalent Vent Length (EEVL)	Tee	8ft (EELV)
	90° Elbow	8ft (EELV)
	Sum of EELV	16ft (EELV)

Termination Equivalent Vent Length (TEVL)*	90° Elbow	5ft (TELV)

Calculated Maximum Vent Length	(SVL)+(EEVL)+(TEVL)=	34ft

Vent Pipe Diameter	4in	
Number of Units in Cascade System	3	
Sum the BTU rating of all units in the Cascade System	199,000 x 3	597,000

Allowable maximum vent length (AMVL) is 80ft for 3-unit configuration with a 4in header diameter as per Table 11. The calculated maximum vent length of 34ft is within the allowed limit.

Table 11: Allowable Maximum Vent Length (AMVL)

			Main Vent Header Diameter			
			4"	6"	8"	10"
No. of Tankless Heater Units	**Maximum BTU/Hr***	**Minimum BTU/HR with cascading**	**Allowable Maximum Vent Length (AMVL) for Common Vented units (Feet)**			
3	597000	9,000	80	150	X	X

*If using a concentric vent, replace the (TELV) with equivalent length (ft) for the concentric vent.

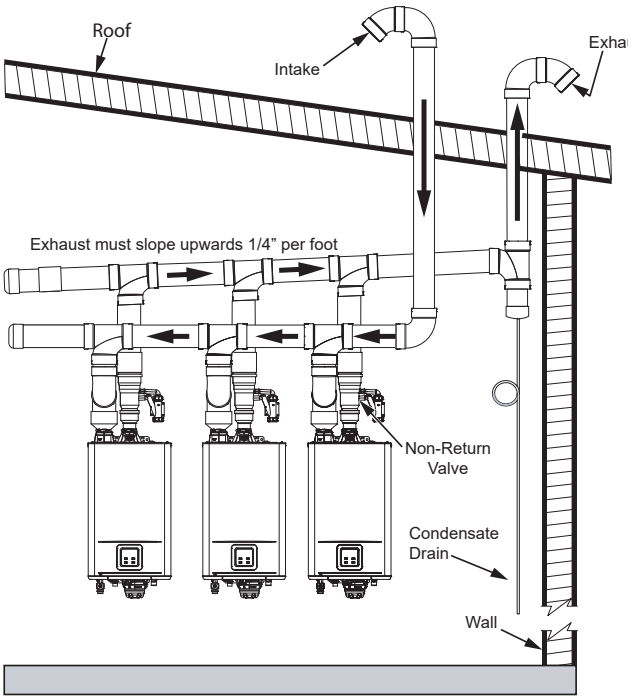

Figure 19 - Vertical Combustion Air and Venting

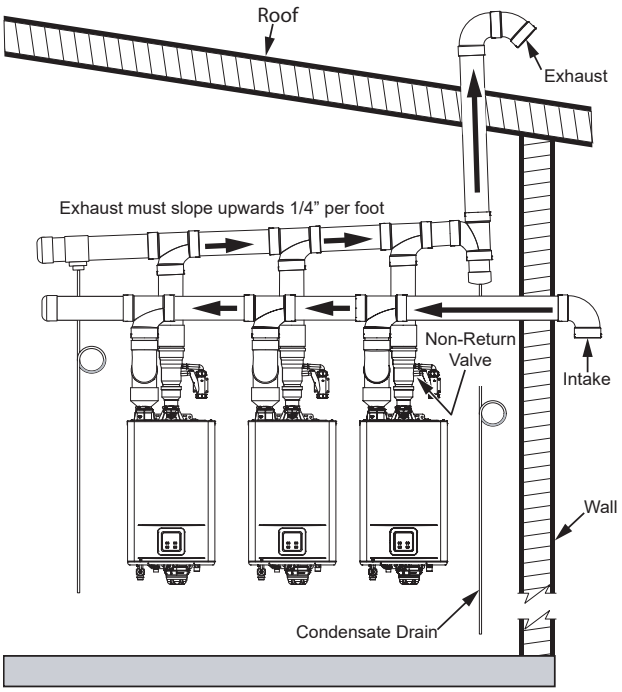

Figure 20 - Horizontal Combustion Air and Vertical Venting

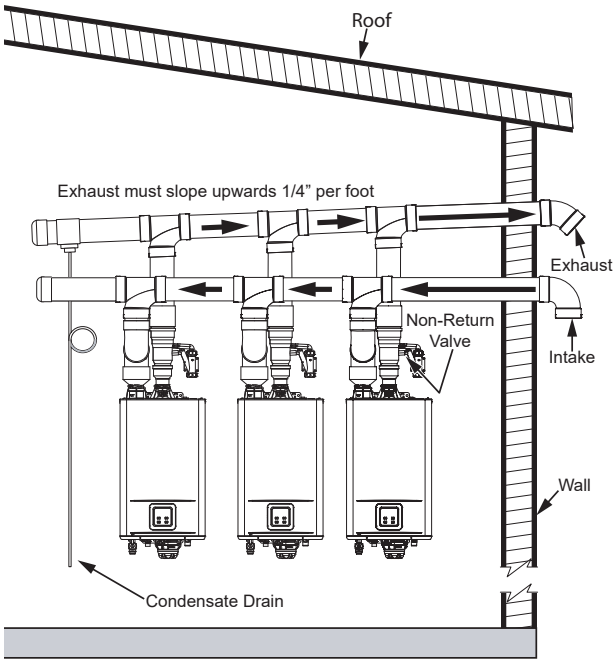

Figure 21 - Horizontal Combustion Air and Venting

Non-Return Vent Adapter

WARNING! Each common vented heater must have a Non-Return Valve (NRV), p/n 100402144, installed in the heater's exhaust. See the instructions packaged with the NRV for proper installation. The installer (licensed professional) is responsible for the correct installation of the Non-Return Valve (NRV) and for compliance with all national, state/provincial, and local codes.

• A Non-Return Valve must be installed for each water heater. This prevents the escape of combustion gas through non-operating appliances.

• For detailed instructions on the common-venting system, refer to the instructions that are packaged with the vent parts or web site.

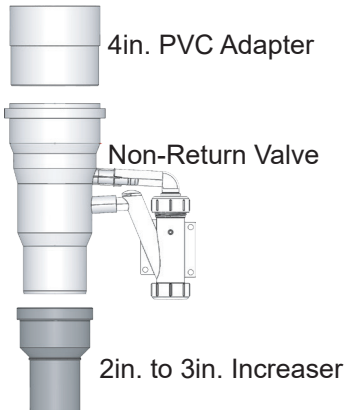

Figure 22 - NRV Part Kit

Clearances for Sidewall Terminations

WARNING! Improper installation can result in carbon monoxide poisoning or death. Follow all local and national codes in regards to proper termination clearances. In the absence of such codes, the clearances below can be used as guidelines. Local codes supersede these guidelines

Multiple Sidewall Terminations

An exhaust termination must be at least: 1 ft (305 mm) from another exhaust termination and 2 ft (610 mm) from an inside corner

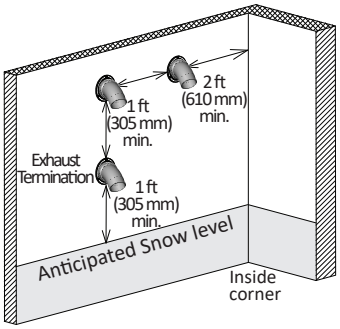

Figure 23 - Multiple Sidewall Terminations

Multiple DV Sidewall Terminations

A direct vent (DV) termination must be at least:

- 1 ft (305 mm) from other DV terminations
- 2 ft (610 mm) from an inside corner

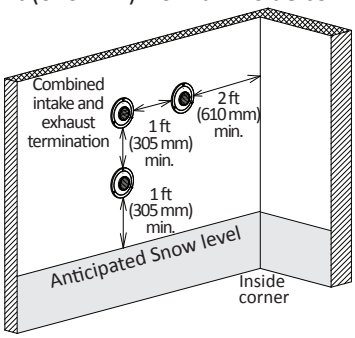

Figure 24 - Multiple DV Sidewall Terminations

Exhaust and/or direct vent sidewall terminations should be at least 2 ft (610 mm) away from an opposite surface/wall. Do not place the termination directly in front of an opening into a building.

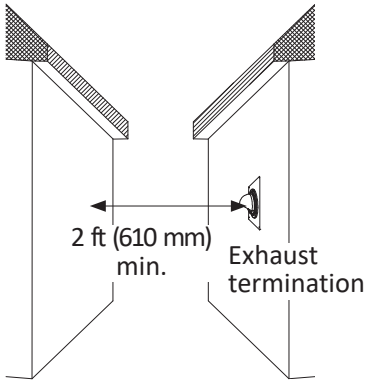

Figure 25 - Sidewall Termination Minimum Distance to another Structure.

For direct vent sidewall terminations that use two separate penetrations for the intake and exhaust, keep the termination clearances shown in the diagrams below.

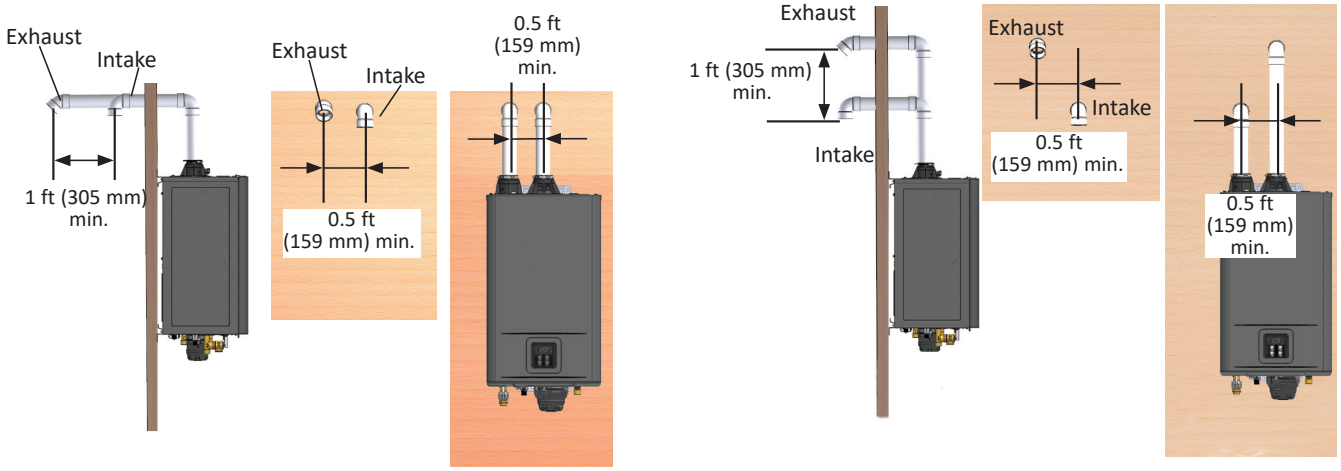

Figure 26 - Direct Vent Sidewall Terminations

Clearances for Rooftop Terminations

WARNING! Follow all local and national codes in regards to proper termination clearances. In the absence of such codes, the clearances below must be met. Local codes supersede these clearances. Failure to observe this warning may result in severe personal injury or death.

NOTICE: Canadian requirements differ from the guidelines in this section.

In Canada, follow the current edition of B149.1, Natural gas and propane installation code as well as local and provincial codes. Contact your local code enforcement agency for direction.

- Exhaust terminations must be at least 1 ft (305 mm) away from any obstructions.
- Minimum spacing between multiple terminals:
  - Intake terminals: 1 ft (305 mm) spacing between each
  - Exhaust terminals: 1 ft (305 mm) spacing between each
- The exhaust termination must be a horizontal distance of at least 2 ft (610 mm) from a wall or surface unless specified differently by local code.
- Failure to observe this warning may result in severe personal injury or death.

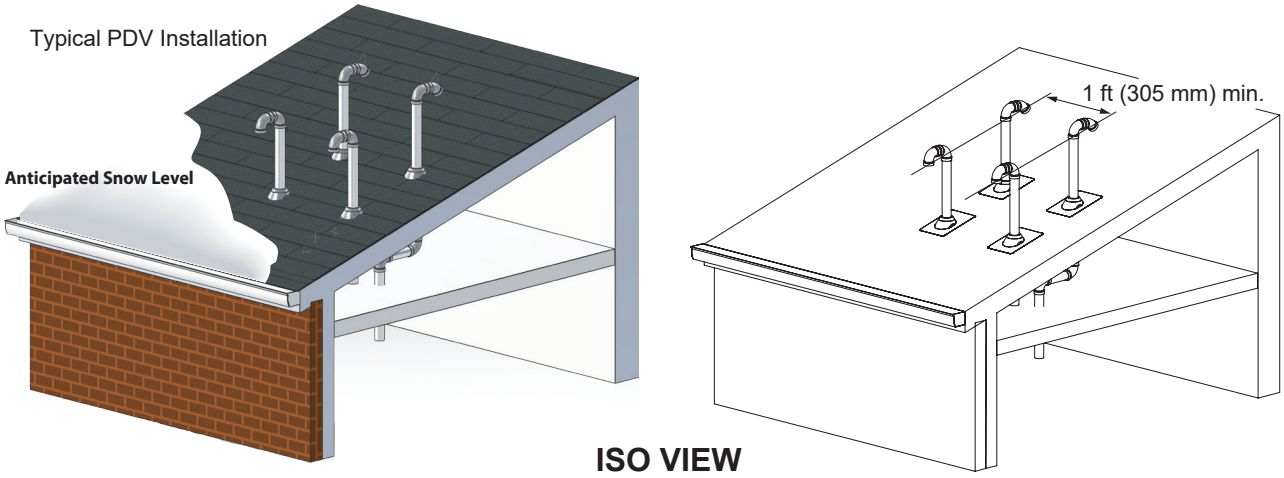

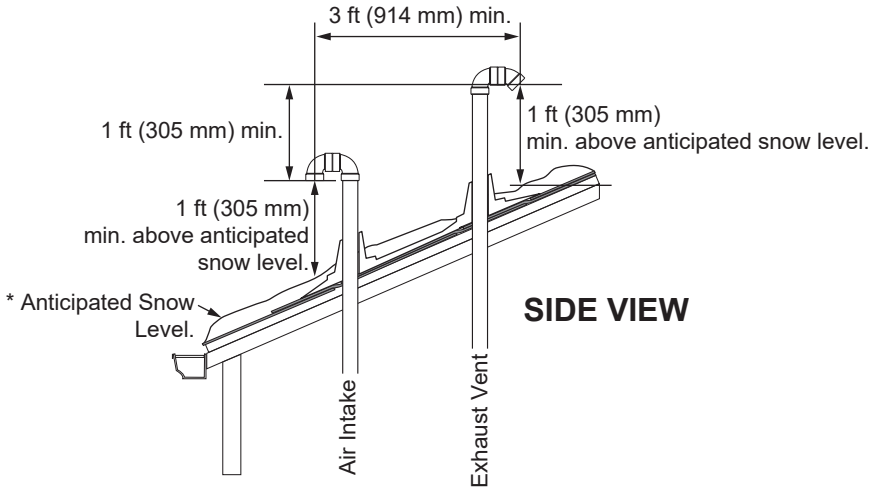

Follow all local and national codes in regards to proper termination clearances. In the absence of such codes, the clearances below must be met. Local codes supersede these clearances.

Figure 27 - Pitched roof with multiple vertical terminations.

Typical PDV Concentric Installation

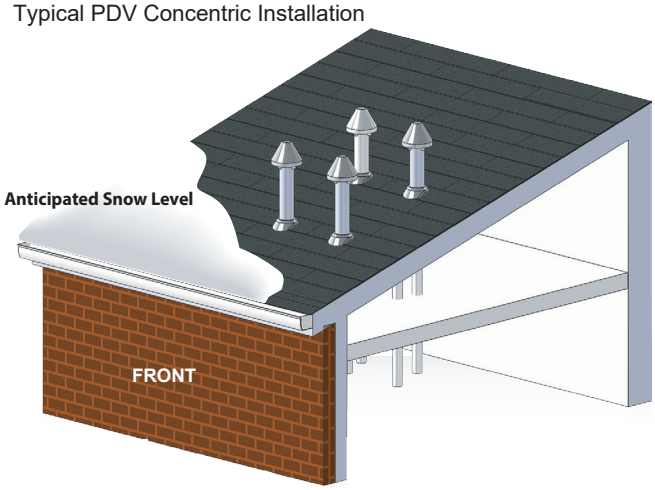

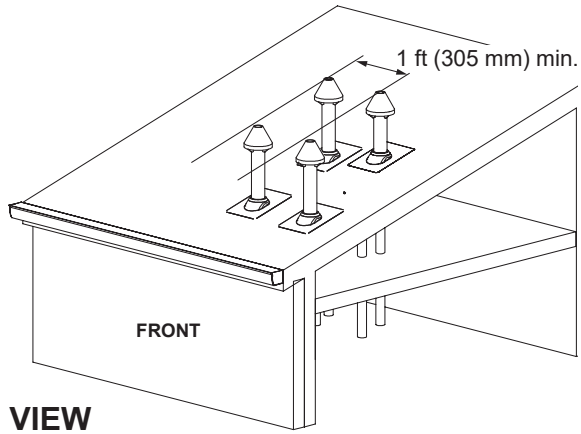

ISO VIEW

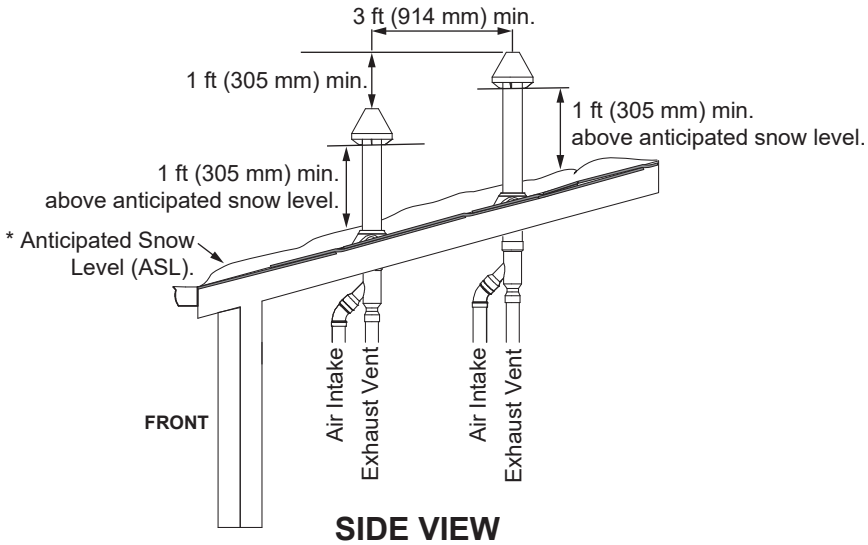

SIDE VIEW

Follow all local and national codes in regards to proper termination clearances. In the absence of such codes, the clearances below must be met. Local codes supersede these clearances.

Figure 28 - Pitched roof with multiple vertical concentric terminations.

Typical Flat Roof Terminations (Both Single and Multiple)

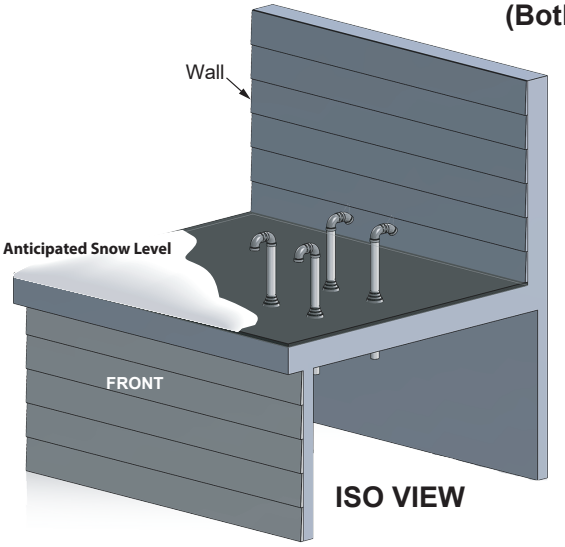

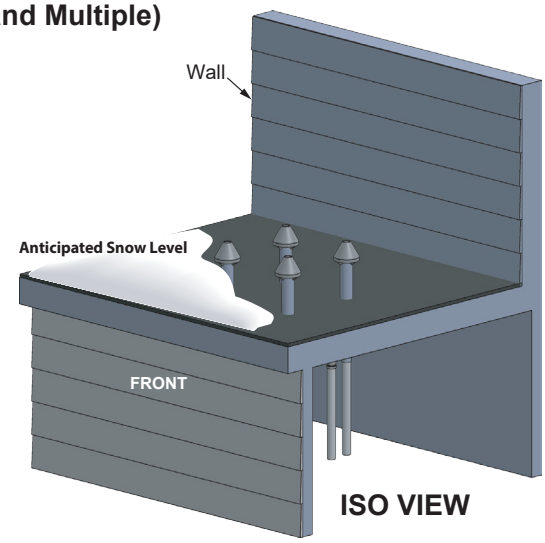

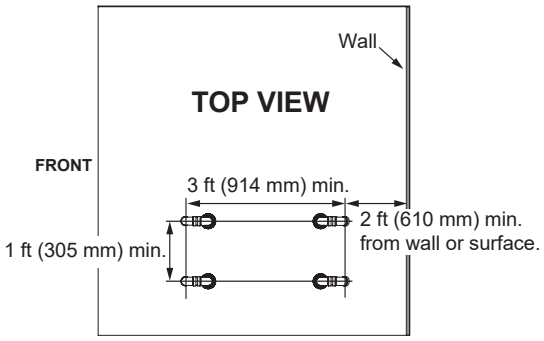

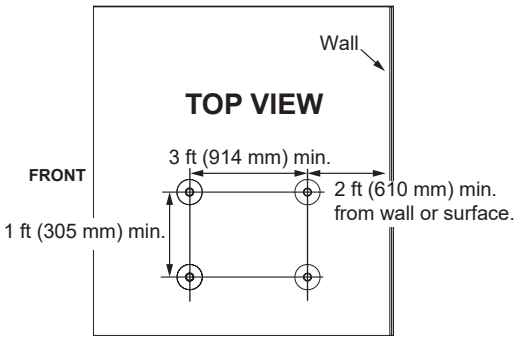

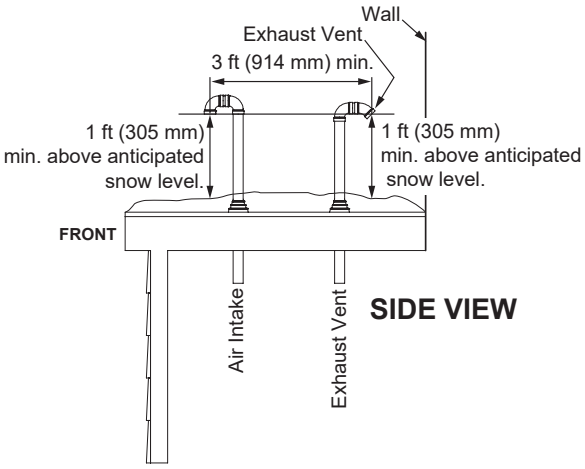

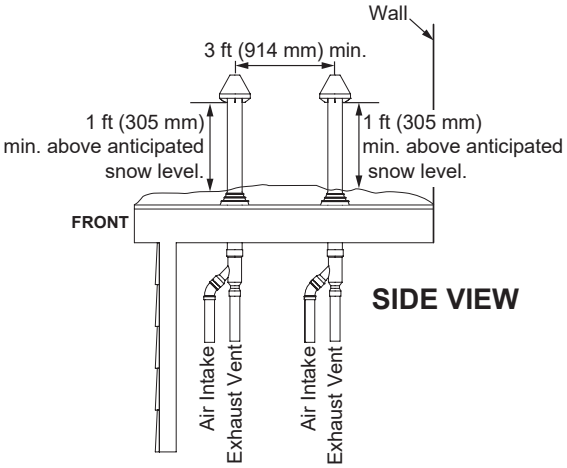

Follow all local and national codes in regards to proper termination clearances. In the absence of such codes, the clearances below must be met. Local codes supersede these clearances.

Figure 29 - Flat roof with multiple vertical terminations.

Exhaust Venting for Outdoor Installation

1 Turn off power and the gas supply to the water heater. Remove the four screws from the top plate of the water heater as shown in the figure below.

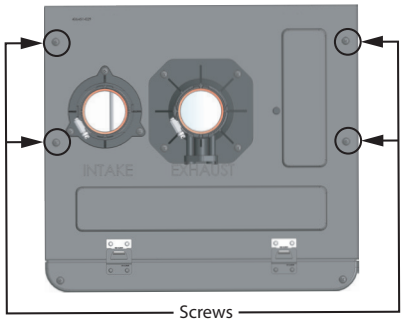

Figure 30 - Remove top plate screws.

2 Orient the outdoor vent cap as shown in Figure 31.

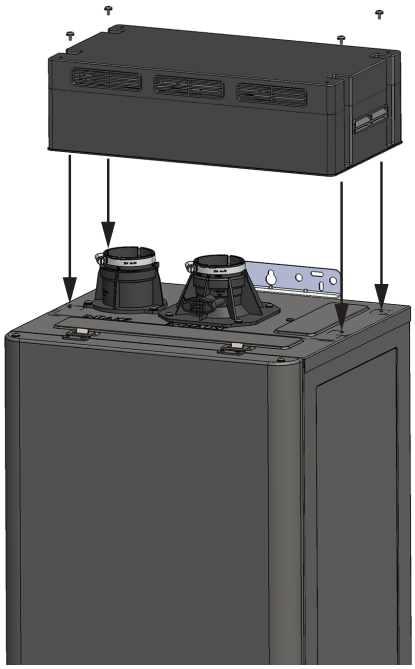

Figure 31 - Outdoor Vent Cap secure with screws.

3 Secure the Outdoor Vent Cap to the water heater at each corner with the screws removed earlier. See Figure 31.

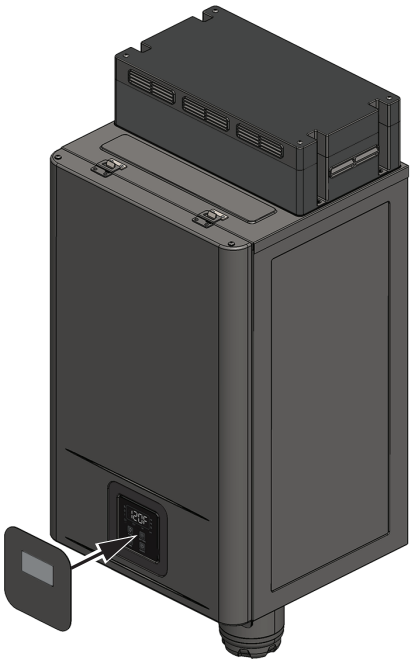

Figure 32 - Control Panel Cover Plate Install.

4 Attach the UIM overlay as shown in Figure 322.

5 Remove the front cover and remove the screw on the top left holding the computer board in place, press the locking tab and pull the computer board towards yourself to lower it on the hinge to access the air inlet plate.

6 Locate the air inlet plate as shown in Figure 333. Remove and keep the 3 screws securing it to the base of the water heater. The plate is color coded and it should be rotated so that the yellow side of the plate is rotated up. Secure with the screws removed earlier.

INDOOR CONFIGURATION

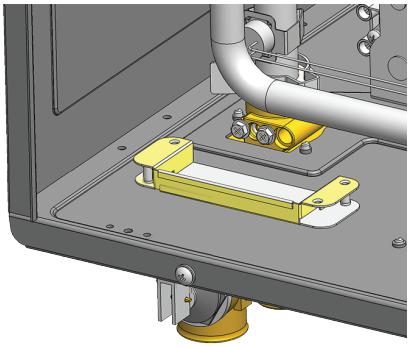

OUTDOOR CONFIGURATION

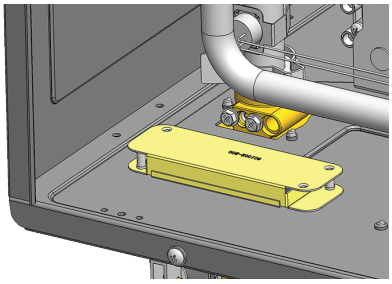

Figure 33 - Air inlet plate orientation options

. 7 Connect the water heater to power. See “Electrical Connections” on page 46.

NOTICE: This water heater comes equipped with a SJWT rated cord which is weather resistant and rated for outdoor use. See “Electrical Connections” on page 46.

Outdoor Available Accessories

It is recommended that a Cartridge Freeze Protection Kit be installed if the water heater is installed outside or in unconditioned areas subject to freezing temperatures.

A pipe cover is available and affixes to bottom of heater. It protects plumbing connections to the heater while improving the appearance of the installation.

For more information see “Available Accessories” on page 15

Gas Supply and Gas Pipe Sizing

Gas Piping

⚠ WARNING! Read the water heater's data plate to determine the type of gas required. Failure to follow these instructions can result in serious injury or death from explosion, fire or carbon monoxide poisoning.

- **Ensure that any and all gas regulators used are operating properly and providing gas pressures within the specified range shown below. Excess gas inlet pressure may cause serious accidents.**
- **The water heater is set only for Natural Gas at the factory.**

Gas piping must be installed according to local and state/provincial codes, or in the absence of these codes, the current editions of ANSI Z223.1/NFPA 54, National Fuel Gas Code in the USA or B149.1, Natural gas and propane installation code in Canada.

- **DO NOT** attach the gas line to the water heater until after supply line pressure testing has been completed to avoid any damage to the water heater.
- The minimum and maximum inlet gas pressures are:

Table 12: - Inlet Gas Type/Pressure
Natural Gas: Min 3.5 in W.C. (0.87 kPa) Max. 10.5 in W.C. (2.62 kPa)
Propane: Min 8.0 in W.C. (1.99 kPa) Max. 13.0 in W.C. (3.24 kPa)

Size the gas pipe appropriately to supply the necessary volume of gas pressure, and allowable pressure drop required for the water heater using gas piping manufacturer instructions, local and state/provincial codes, or in the absence of these codes, the current editions of ANSI Z223.1/NFPA 54, National Fuel Gas Code in the USA or B149.1, Natural gas and propane installation code in Canada. Otherwise, flow capabilities and output temperatures will be limited.

- Inlet gas pressures that fall outside the range of values listed above may adversely affect the performance of the water heater. These pressures are measured when the water heater and all other gas appliance(s) served by the same gas line are in full operation.
- Inlet gas pressure must not exceed the maximum values in Table 12; gas pressure above the specified range will cause dangerous operating conditions and damage to the unit.
- If the gas supply pressure to the heater is greater than the specified maximum, a field-supplied regulator is required. The regulator must lower the gas pressure within the approved range.
- Install the gas regulator according to the manufacturer's instructions. Some manufacturers may require a certain amount of straight pipe on the outlet prior to any additional fittings.
- The regulator must be sized for the water heater's minimum to maximum input and provide the specified pressures that are listed on the rating plate.
- In the absence of minimum install distance stated by the regulator manufacturer, it is recommended that there is at least 3 ft (1 m) of piping between the regulator outlet and the water heater's inlet gas connection.

Gas Connections

1. Use a 1/2 in union to connect gas piping to the water heater's 1/2 in male NPT connection.
2. Install a readily accessible manual shut-off valve in the gas supply line as recommended by the local utility. Know the location of this valve and how to turn off the gas to this unit.
3. Install a Sediment Trap as shown in ."TYPICAL INSTALLATIONS" on page 5 The Sediment Trap must be no less than three inches long for the accumulation of dirt, foreign material, and water droplets.
4. When the gas connections are completed, it is necessary to perform a gas leak test either by applying soapy water to all gas fittings and observing for bubbles or by using a gas leak detection device.
   - The water heater and its individual shutoff valve must be disconnected from the gas supply piping system during any pressure testing of that system at test pressures in excess of 1/2 psi (3.5 kPa).
   - The water heater must be isolated from the gas supply piping system by closing its individual manual shutoff valve during any pressure testing of the gas supply piping system at test pressures equal to or less than 1/2 psi (3.5 kPa).
5. Always purge the gas line of any debris and/or water before connecting to the gas inlet.
6. Install a ground joint union between the gas control valve and the manual gas shut-off valve. This is to allow easy removal of the gas control valve.
7. Turn the gas supply on and check for leaks. Use a small, soft-bristled brush to apply a hand dishwashing soap and water mixture (1 part soap to 15 parts water) or children's soap bubbles to all connection points of the gas piping. Saturate all the connections and check for gas leaks (which will appear as small bubbles). If any leaks are detected, tighten the appropriate connection(s) and re-check.

Natural Gas Supply Piping

Maximum delivery Capacity in Cubic Feet of Gas per Hour (based on IPS

Pipe carrying Natural Gas with 0.60 Specific Gravity with a Pressure Drop of 0.5 in W.C.).
Based on Energy Content of 1,000 BTU/ft^3: The water heater requires 199 ft^3/h for the CTH-199M.
The following tables are from ANSI Z223.1/NFPA 54. (Unit: Cubic feet per hour)

Table 13: Natural Gas Table

Pipe Size	Length												
Diameter	10 ft (3.0 m)	20 ft (6.1 m)	30 ft (9.1 m)	40 ft (12.2 m)	50 ft (15.2 m)	60 ft (18.3 m)	70 ft (21.3 m)	80 ft (24.4 m)	90 ft (27.4 m)	100 ft (30.5 m)	125 ft (38.1 m)	150 ft (45.7 m)	200 ft (61.0 m)
1/2 in	172	118	95	81	72	65	60	56	52	50	44	40	34
3/4 in	360	247	199	170	151	137	126	117	110	104	92	83	71
1 in	678	466	374	320	284	257	237	220	207	195	173	157	134
1-1/4 in	1,390	957	768	657	583	528	486	452	424	400	355	322	275
1-1/2 in	2,090	1,430	1,150	985	873	791	728	677	635	600	532	482	412
2 in	4,020	2,760	2,220	1,900	1,680	1,520	1,400	1,300	1,220	1,160	1,020	928	794

Propane (LP) supply piping

Maximum Capacity of Propane (LP) Based on 11 in W.C. supply pressure at a 0.5 in W.C. pressure drop. (Unit: kBTU per hour)

Table 14: Propane Gas Table

Pipe Size	Length												
Diameter	10 ft (3.0 m)	20 ft (6.1 m)	30 ft (9.1 m)	40 ft (12.2 m)	50 ft (15.2 m)	60 ft (18.3 m)	70 ft (21.3 m)	80 ft (24.4 m)	90 ft (27.4 m)	100 ft (30.5 m)	125 ft (38.1 m)	150 ft (45.7 m)	200 ft (61.0 m)
1/2 in	268	184	148	126	112	101	93	87	82	77	68	62	53
3/4 in	567	393	315	267	237	217	196	185	173	162	146	132	112
1 in	1,071	732	590	504	448	409	378	346	322	307	275	252	213
1-1/4 in	2,205	1,496	1,212	1,039	913	834	771	724	677	630	567	511	440
1-1/2 in	3,307	2,299	1,858	1,559	1,417	1,275	1,181	1,086	1,023	976	866	787	675
2 in	6,221	4,331	3,465	2,992	2,646	2,394	2,205	2,047	1,921	1,811	1,606	1,496	1,260

Gas sizing example

(Natural Gas)

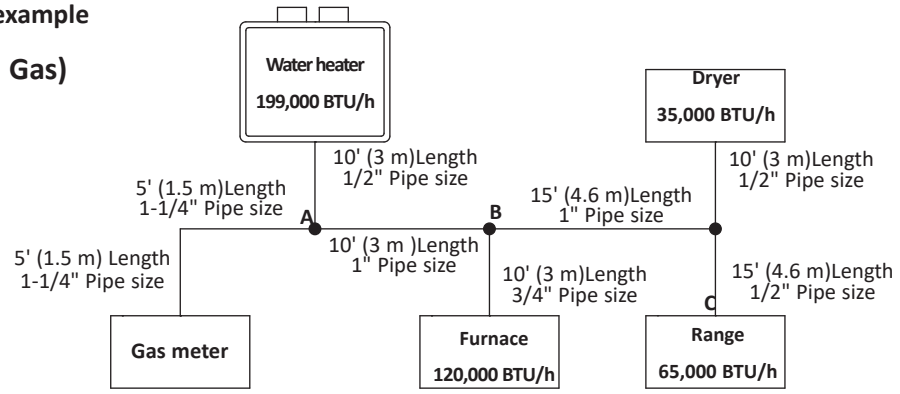

Based on Energy Content of 1,000 BTU/ft^3:

Divide each appliance's BTU/h requirement by 1,000 BTU/ft^3 to get the appliance's ft^3/h requirement.

Take into account the distance the appliance is from the gas meter, look in the above gas chart to properly size the line.

For sections of the gas line supplying gas to more than one appliance (Ex: Point A to Point B), add up the cubic ft per hour requirements of the appliances that are being supplied by that section, and size to the farthest appliance.

For Example: The section from A to B supplies gas to the furnace, range and dryer. Adding up the BTU/h requirements and dividing by 1,000 yields a ft^3/hr requirement of 220 ft^3 of gas per hour. The farthest appliance is the range, which is 50 ft away from the meter. Looking at the above chart, and under the column of 50 ft, Section A to B needs to be 1 in in order to supply 220 ft^3.

Gas Conversion Restriction

The water heater is set only for natural gas at the factory. No field gas conversion is allowed.

WARNING! An improper field conversion could cause potentially dangerous conditions that may cause an explosion or fire resulting in property damage, bodily injury or both.

Water Connections

⚠ WARNING! Do not use this appliance if any part has been under water. Immediately contact a qualified installer or service agency to replace a flooded water heater. Do not attempt to repair the unit! It must be replaced!

NOTICE: Do not reverse the hot outlet and cold inlet connections to the water heater. If you reverse the connections, the water heater will not activate properly.

Determine the type of water pipes in your building. Use fittings appropriate for the type of pipe in your building (copper, CPVC, or PEX). Do not use iron or PVC pipe – they are not suitable for potable water. All pipes, pipe fittings, valves and other components, including soldering materials, must be suitable for potable water systems. Also, an automatic air vent or air separator must be installed when the water heater operates in a closed loop system such as a recirculation system. Trapped air bubbles in the water system can cause a pump to cavitate or damage the water heater's heat exchanger. This equipment must be installed according to its manufacturer's instructions.

- A manual shutoff valve must be installed on the cold water inlet to the water heater between the main water supply line and the water heater.
- Install Thermostatic Mixing Valves to regulate the temperature of the water supplied to each point-of-use (for example, kitchen sink, bathroom sink, bath, shower). Install and adjust the mixing valve according to its manufacturer's instructions.

  ⚠ WARNING! Even if the water heater's thermostat is set to a relatively low temperature, hot water can scald. Install Thermostatic Mixing Valves at each point-of-use to reduce the risk of scalding (see Table 3).

  BACKGROUND: A Thermostatic Mixing Valve, installed at each point-of-use, mixes hot water from the water heater with cold water to more precisely regulate the temperature of hot water supplied to fixtures. If you are not sure if your plumbing system is equipped with properly installed and adjusted Thermostatic Mixing Valves at each point where hot water is used, contact a qualified person.
- Water expands when heated, and the increased volume of water must have a place to go, or thermal expansion will cause large increases in water pressure (despite the use of a Pressure Reducing Valve in the home's main water supply line). The Safe Drinking Water Act of 1974 requires the use of backflow preventers and check valves to restrict water from your home reentering the public water system. Backflow preventers are often installed in water meters and may not be readily visible. As a result, most all plumbing systems today are now "closed," and almost all homes now need a Thermal Expansion Tank Expansion tanks are pre-charged with a minimum of 12 psi air charge. The expansion tank's air pressure must be adjusted to match the inlet pressure of your home but must not be higher than 80 psi.
- Connect the cold water supply using 3/4 inch National Pipe Thread "NPT" to the fitting marked COLD.
- For ease of removing the water heater for service or replacement, connect the water pipes with a union. We recommend using a dielectric-type union (available at your local plumbing supplier). Dielectric unions can help prevent corrosion caused by tiny electric currents common in copper water pipes and can help extend the life of the water heater.
- Connect the hot water supply using 3/4 inch NPT to the fitting marked HOT. Follow the same connection guidelines as for the cold water supply.
- In addition, a manual shutoff valve is also recommended on the hot water outlet.

- Double check to make sure the hot and cold water pipes are connected to the correct hot and cold water fittings on the water heater.
- If needed, install (or adjust) the building's Pressure Reducing Valve.
- Before installing the water heater, flush the water line to remove all debris, and after installation is complete, purge the air from the line. Failure to do so may cause damage to the heater.
- There is a wire mesh filter within the cold inlet to trap debris from entering your heater. This will need to be cleaned periodically to maintain optimum flow.
- Install insulation (or heat tape) on the water pipes especially if the indoor installation area is subject to freezing temperatures. Insulating the hot water and return pipes will reduce heat loss.
- If water hammer is evident install water hammer arrestors on the inlet side.
- A drain pan, or other means of protection against water damage, is recommended to be installed under the water heater in case of leaks.

IF YOU HAVE COPPER PIPES:

If your building has copper water pipes, you can solder the water pipe connections or use compression fittings which don't require soldering. Compression fittings are easier to

install than soldering pipe. Check with local plumbing officials to determine what types of pipe materials are suitable for your location. Do not use lead-based solder.

NOTICE: Do not solder pipes while they are attached to the water heater. The water heater contains non-metallic parts which could be damaged. The proper way to connect the water heater to copper water pipes is as follows:

- Solder a short length of pipe (about a foot or so) to a threaded adapter using only 95/5 tin antimony or equivalent solder.

- Attach the threaded adapters to the water heater's connections (using thread sealant tape or pipe joint compound). Connect the building's water pipes by soldering, keeping the connections at the water heater cool with wet rags.

Recirculation

External Pump

When installing an external recirculation pump, care must be taken to properly size the pump for the application. Sizing must be performed by the installing contractor or engineer. The following requirements need to be observed when sizing:

- Size the recirculation pump to flow no less than 2 gpm (7.6 l/m) and no more than 4 gpm (15.1 l/m) per activated heater. The manufacturer's suggested flow rate is 3 gpm (11.4 l/m). Refer to the water heater's pressure drop chart on its specification sheet for losses at other flow rates. Head loss at 3 gpm is approximately 16.9 ft. of head (7.3 psi) The pump should be controlled by a field supplied aquastat with immersion probe and an adjustable differential. The minimum suggested differential is 15°F (8.3°C). NOTE: Running the pump continuously will reduce the warranty of the water heater.
- An air elimination device is suggested to remove air from the piping system. Air may cause the recirculation pump to cavitate and may reduce the water flow rate. These items should be installed per the manufacturer's instructions.

The installer will need to consider the size of water tubing, material type, and fittings when determining the pressure drop of the system to size the recirculation pump. Note that these characteristics vary for each tubing material of the same nominal size. Refer to the water tubing manufacturer for pressure drop information that is needed to size the recirculation pump.

Below is a suggested piping diagram. Check with local codes and ordinances for additional installation requirements. Refer to the water heater manufacturer's website for additional layouts.

Thermostatic mixing valves may be used with tankless water heaters. Consult with the mixing valve manufacturer for the appropriate mixing valve for the application. Refer to the thermostatic mixing valve manufacturer for proper installation when recirculation is in use.

To reduce the risk of scalding, install Thermostatic Mixing Valves (temperature limiting valves) at each point of use.

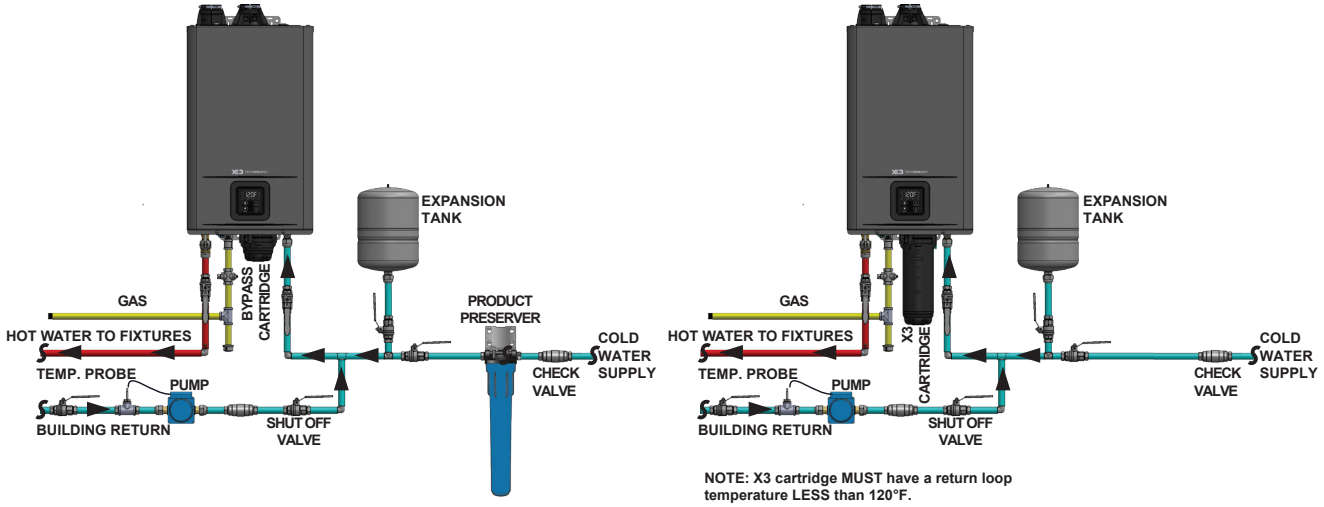

Figure 34 - Recirculation Loop Typical Configurations

Combination Potable Water and Space Heating

⚠ WARNING! This water heater is suitable for combination water (potable) heating & space heating, and not suitable for space heating applications only.

- **This water heater shall not be connected to any heating system or component(s) previously used with non-potable water where any chemicals were added to the water heating appliances.**
- **Toxic chemicals used in boiler treatments such as alcohol, glycerol, and glycol groups must not be introduced into the water system.**
- **When the system requires water for space heating at temperatures higher than required for other uses, thermostatic mixing valves must be installed at each point-of-use. Water temperatures over 125°F (52°C) can cause severe burns instantly or death from scalding. Failure to observe these warnings could result in severe personal injury or death.**

Care must be taken by the installing contractor or design engineer to size the components of the system appropriately for flow rate and temperature. In addition to sizing the water heater for the domestic potable water, the installer must size the water heater to provide the flow rate required by the manufacturer of the air handler. Refer to the air handler manufacturer's instructions and specification documents for this flow rate. The pump, field supplied or provided by the air handler manufacturer, must be able to provide this minimum flow rate.
When sizing the pump, the installer must take into account the pressure drop of the following:

- Hydronic Air Handler. Refer to the manufacturer for this information.
- Water Heater. Refer to the water heater's specification sheet for pressure drop information. At 3 gpm, the approximate head loss is 16.9 ft. of head (7.3 psi).
- Water Tubing Size, Length, and Material. Refer to the water tubing manufacture for pressure drop information as it differs from one material to the next and at different sizes. There may be additional application requirements by the water tubing manufacturer.
- Fittings: Refer to the fitting manufacturer for pressure drop information.

Additional considerations are:

- Installing an air elimination device to remove air that may cause cavitation in the pump.
- A priority control device, such as a flow switch, to prioritize the domestic water system over the heating system.
- Thermostatic mixing valves at each point-of-use. Refer to the mixing valve manufacturer for proper selection and installation.

Figure 35 is a suggested piping layout. The installer must properly install the system per manufacturer's instructions and local codes.

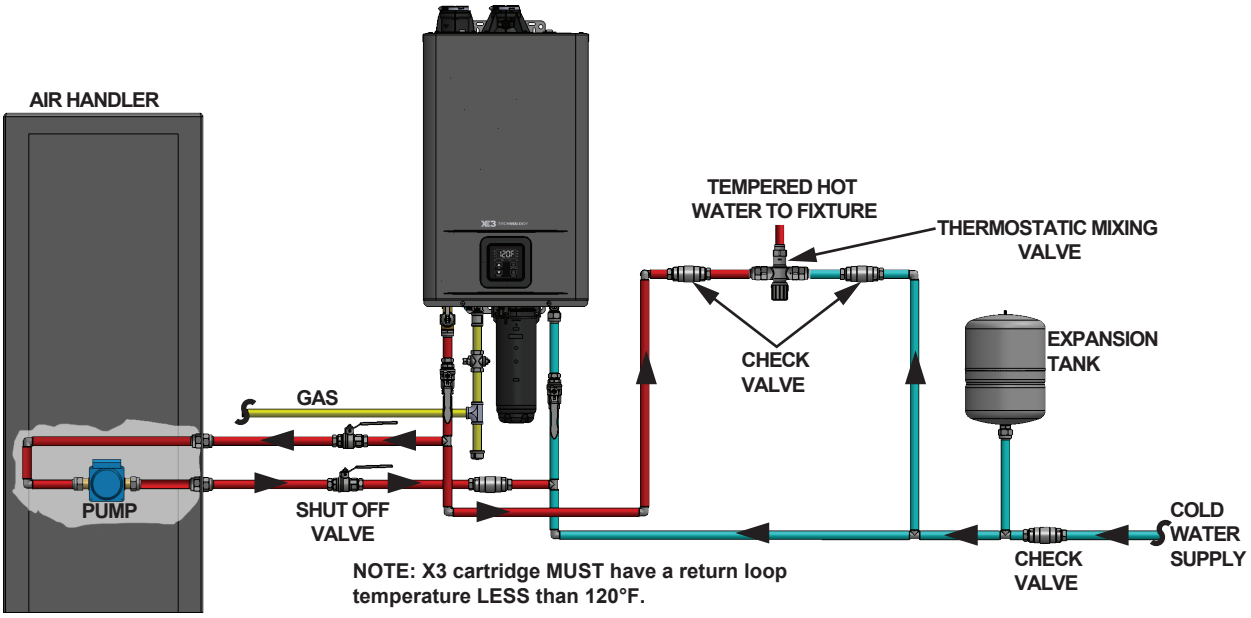

Figure 35 - Air Handler/Recirculation Loop Configurations

Dual Purpose Water Heating for the State of Massachusetts

- This section applicable to Massachusetts (USA) installations only. Not applicable in Canada.
- Priority Control Devices such as a flow switch, an Aquastat or other electronic controller can be used to prioritize the domestic water system over the heating system.
- Follow all local codes, or in the absence of local codes, follow the current edition of the National Standard Code, ANSI Z21.10.3, CSA 4.3.
- The illustration below is a concept design only. The reference to the 1/8-inch hole in the check valve is only required in the State of Massachusetts. There are a wide variety of variations to the application of controls and equipment presented. Designers must add all the necessary safety and auxiliary equipment to conform to code requirements and design practice. For more details, contact the manufacturer or local code authority.

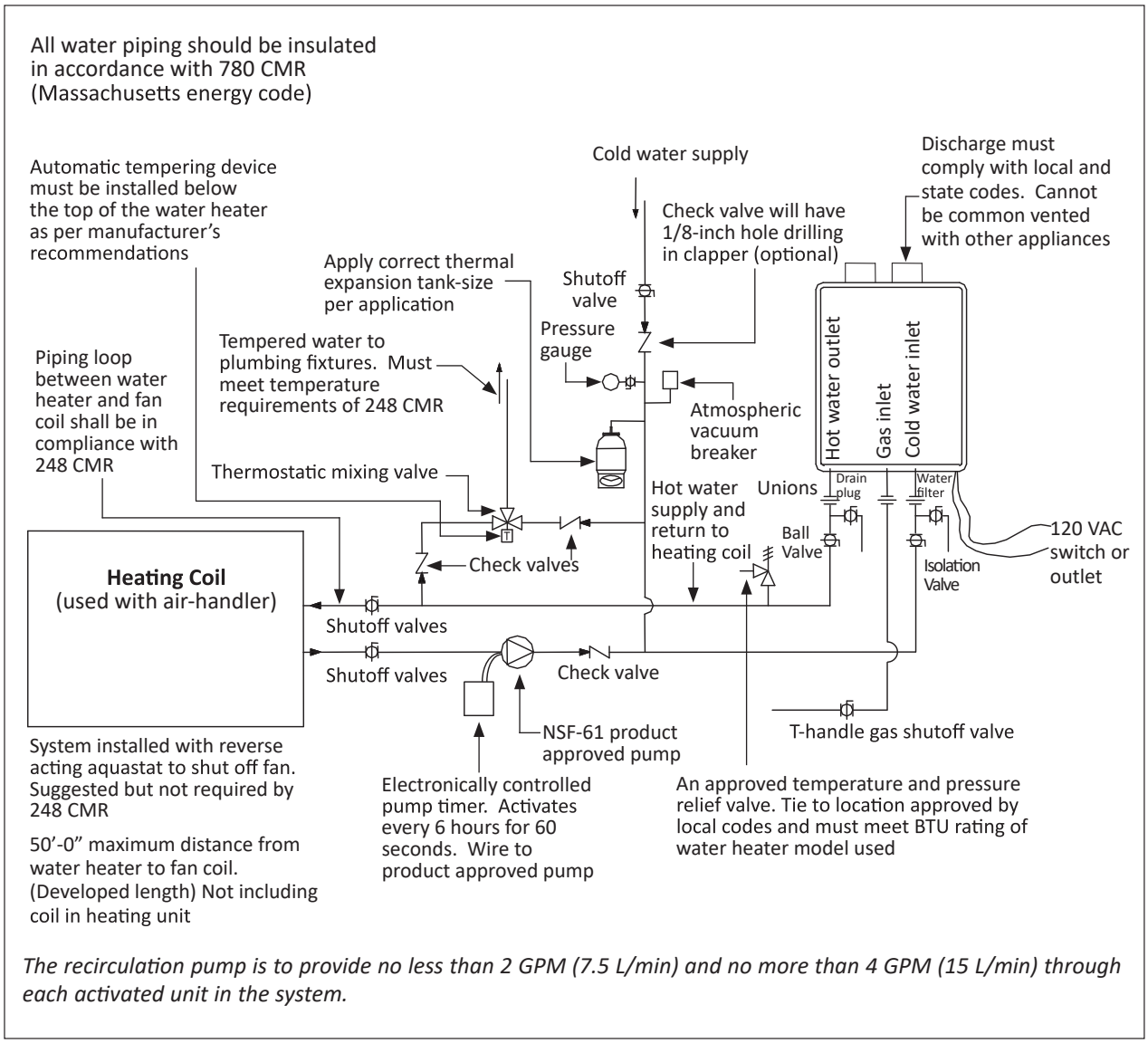

Figure 36 - Diagrammatic Layout of Radiant Heating and Domestic Water Heater

Water Quality

The performance, efficiency, and service life of a tankless water heater depends heavily on the quality of the water supplied to the unit. For safe, reliable, long-life operation, the tankless water heater should only be connected to a potable water source that meets drinking water standards. Water should be free of corrosive chemicals, aggressive cleaning agents, or other contaminants that can cause premature deterioration of internal components, reduce heat exchanger efficiency, and lead to avoidable maintenance issues and premature failure. Untreated or contaminated water may result in damages not be covered under warranty.

In regions with hard water, additional treatment such as softening, conditioning, or flushing/descaling may be required to prevent scale accumulation within the heat exchanger. Excess mineral content significantly affects system performance and will increase maintenance frequency and should be properly managed. Consult a qualified technician familiar with water quality in your area to formulate a plan for routine maintenance.

Ensuring appropriate water quality is a critical part of protecting the equipment, maintaining warranty compliance, and achieving long-term, trouble-free operation.

Table 15: Secondary Maximum Contaminant Levels For Public Water Systems

Contaminant	Maximum Level
Total Hardness	Up to 200 mg/L (12 gpg)
Aluminum	Up to 0.2 mg/L
Chloride	Up to 250 mg/L
Copper	Up to 1.0 mg/L
Iron	Up to 0.3 mg/L
Manganese	Up to 0.05 mg/L
pH	6.5 to 8.5
Sulfate	Up to 250 mg/L
Total Dissolved Solids (TDS)	Up to 500 mg/L
Zinc	Up to 5 mg/L

Source: EPA Part 143 - National Secondary Drinking Water Regulations

Table 16: Water Hardness & Suggested Maintenance Matrix

Hardness Classification	MG/L	Grains Per Gallon	Water Treatment Method	Commercial Flushing Maintenance Frequency
Soft	0 - 60	0 - 3.5	Water Softener or Product Preserver (PP-AS20) Recommended	Once/Year
Moderately Hard	61 - 120	3.5 - 7.0	Water Softener or Product Preserver (PP-AS20) or X3 Scale Prevention Cartridge* Highly Recommended	Twice/Year**
Hard	121 - 180	7.0 - 10.5		
Extremely Hard	181 - 250	10.5 - 14.5	Water Softener or Product Preserver (PP-AS20)or X3 Scale Prevention Cartridge* Required	

*X3 Scale Prevention cartridge (100368986) replaces the commercial CTH-199M Bypass Cartridge to add an additional layer of scale prevention to the heater in extreme hard water conditions. The X3 Scale Prevention cartridge is suitable for use in commercial applications with or without recirculation as long as the return water temperature does not exceed 120°F. Not suitable for commercial recirc systems with dedicated return lines where returning water temperatures may exceed 120°F.

**Frequency of flushing maintenance may need to be increased dependent on a variety of factors including water treatment methods employed, set point water temperature, water usage, and local water hardness. Consult a qualified professional familiar with local water conditions and commercial applications for guidance on maintenance scheduling to maintain optimal performance.

Pressure Relief Valve

NOTICE: A Pressure Relief Valve is NOT provided with the water heater and must be field supplied by the installer.

WARNING! Hot water could be released. Before operating the pressure relief valve manually, check that it will discharge in a safe place. If water does not flow freely from the end of the discharge pipe, turn the gas supply and power OFF and call a qualified person to determine the cause.

Refer to the pressure relief valve manufacturer's instructions for inspection and maintenance requirements.

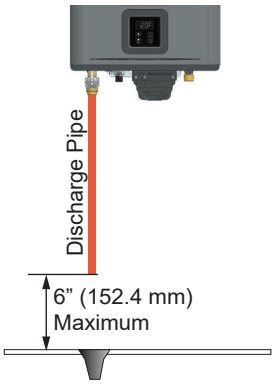

Figure 37 - Discharge Pipe

The water heater has a high-temperature shutoff switch built in as a standard safety feature (called a Hi-Limit switch) therefore a "pressure only" relief valve is required.

- The discharge piping for the pressure relief valve must be directed so that the hot water cannot splash outward and cause damage or personal injury.
- The pipe must also be able to withstand 210°F without distortion. Use only copper or CPVC pipe approved for discharge use. Do not use any other type of pipe, such as PVC, iron, flexible plastic pipe, or any type of hose.
- Attach the discharge tube to the pressure relief valve and run the end of the tube to within 6 in (152 mm) from the floor for US installations and 12 in (305 mm) for Canadian installations. This discharge tube must allow free and complete drainage without any restrictions.
- In cold climates, terminate the discharge pipe inside the building to an adequate drain. Outside drains could freeze and obstruct the drain line — protect the discharge pipe from freezing.
- If the pressure relief valve discharges periodically, this may be due to thermal expansion in a closed water supply system. Contact the water supplier or a local plumbing professional on how to correct this situation. Do not plug the pressure relief valve.
  The pressure relief valve must be manually operated annually to check for correct operation. Before operating the valve manually, check that it will discharge in a place for secure disposal.
- No valve must be placed between the relief valve and the water heater.
- If another pressure relief valve is used or needs to be replaced, it must meet the following:
  - The pressure relief valve must conform to local codes.
  - The discharge capacity must be at least 199,000 BTU/h for the CTH-199M model,
  - The pressure relief valve needs to be rated for a maximum of 150 psi (1 MPa).

Condensate Drain

- Follow all code requirements of the local authority on condensate neutralizers and whether or not they are required for the installation.
- Discharge condensate (acidic water) in accordance with all local codes and common safety practices.
- Install minimum 1/2 in corrosion resistant pipe, such as PVC, for the condensate drain line. Do not use metal pipe.
- The condensate drain does not require a trap.
- Maintain a downward slope on the drain line(s), including installations in which the drain is not directly below the water heater.
- If a neutralizer is installed, a field-supplied overflow bypass fitting (tee/wye) is recommended.
- Do not connect the condensate drain line directly to a condensate pump.
  If the drain line is required to have bends, ensure that there are no kinks that will restrict the flow of condensation.
- The condensate drain is at atmospheric pressure (non-pressurized) and therefore must be allowed to drain freely with gravity only. Ensure that the condensate drain tube is not plugged or blocked, and ensure that it slopes downward to allow condensate to flow freely. All portions of the condensate drain (neutralizer and drain tube) must be at a lower elevation than the water heater to prevent condensate water from building up inside the heat exchanger.
- Condensate cannot be effectively neutralized if the neutralizer elements have been completely consumed. If this happens, condensate will remain acidic and can possibly cause damage to items such as pipes, concrete, etc., if drained improperly.
- The actual life of the neutralizer may vary, depending on the application and usage. Replace the cartridge when the condensate pH goes below 6.0.
- All preventative measures and safety practices must be adhered to when draining condensate. The manufacturer will not be responsible for any damage caused by condensate.
- A drain pan, or other means of protection against water damage, is recommended to be installed under the water heater in case of leaks.

Electrical Connections

WARNING! Working on an energized circuit can result in severe injury or death from electrical shock.

1. The water heater must be electrically grounded. Do not attach the ground wire to either the gas or the water piping.
2. The water heater requires a 120 VAC, 60 Hz electrical power supply that is properly grounded.
   - A proper disconnect (i.e. on/off switch, power plug, etc.) controlling the main power to the water heater must be provided for service reasons. (Must comply with local codes.)
   - This water heater comes equipped with a SJWT rated cord which is weather resistant and rated for outdoor use.
3. The water heater can be hardwired or plugged into an outlet with the correct voltage listed above using the supplied power cable already attached.
4. The use of a surge protector is recommended in order to protect the unit from power surges.

Plug-in Connection

1. The water heater should be plugged into a 120VAC, 60 HZ ground electrical outlet.

Hard Wired Connection

NOTE: Follow the steps below if the power supply must be hardwired to the water heater. Otherwise, you may skip this section.

1. Remove and keep the screws securing the front cover, then remove it.
2. Remove and keep the screw in the upper left corner of the printed circuit board.
3. Depress the latch in the upper right corner of the printed circuit board and lower it.
4. Locate the system power cord using Figure 388. Cut the wires at the location shown in Figure 388.

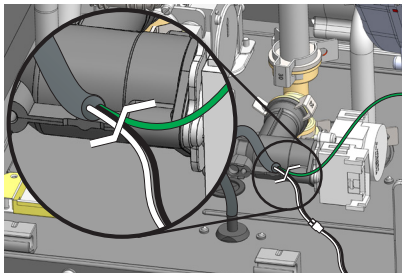

Figure 38 - System power cord cut location.

5. Remove the screws securing the power cord to the bottom of the water heater.
6. Remove the power cord from the bottom of the water heater and install a strain relief connector in the opening.
7. Make the electrical connection to the water heater. Follow all local codes or in the absence of local codes, with the National Electrical Codes: ANSI/NFPA 70 in the USA.
8. Verify all electrical connections are secure.
9. Replace the front cover and turn on power to the water heater.
10. Follow the instructions in the Getting Started section of this manual.

Cascade System

The Cascade System allows up to 12 heaters of the same input to be linked in a Parent/Child configuration. Do not link heaters of different input rates together.

The Cascade System will activate heaters based on the system flow rate demand. When system demand increases or decreases, the cascade system will activate/deactivate heaters as needed to balance flow through the heaters.

The Parent heater determines when to activate/deactivate heaters. The order of heater activation is set by the Parent heater and will sequence the heaters in order from the least combustion hours to the most. This allows for even operation of all the water heaters in the cascade system. The heaters will deactivate in the reverse order that they are activated, meaning if Child Heater 11 was the last to turn on, it will be the first to turn off when system demand decreases. The Parent heater will reorder the sequence on a weekly basis.

The new sequence of activation will start with the heater that has the least combustion hours to the most. Each heater will activate based on predetermined flow rate factors. These factors vary based on heater model. Contact the heater manufacturer for additional information.

If any child heater encounters an error code, the cascade system will bypass that heater and continue to operate. If the Parent heater loses power, then the cascade system deactivates. The user will need to change the settings of one of the other heaters to be the Parent or resolve the issue of the Parent heater.

WARNING! Working on an energized circuit can result in severe injury or death from electrical shock.

1. The Cascade system should be configured with the Parent water heater as either the first or last in the series of water heaters connected to the cold water supply. The Child units will follow sequentially. See Figure 40.

2. Before proceeding, disconnect electrical power to all water heaters in the Cascade configuration.

3. Remove the front cover and keep the two screws from the Parent and from each Child water heater for re-installation.

4. On the Parent water heater lift the plastic clip locking the control panel in place and lower it down out of the way.

5. Remove and keep the clear plastic shield material that covers the Printed Circuit Board (PCB) for re-installation.

6. On the bottom of the water heater locate the rubber access grommet. Route the single harness end of the Cascade Linking Cable through the bottom and around to the circuit board. NOTICE: The cable should be routed under the circuit board assembly to prevent strain to the wiring harness.

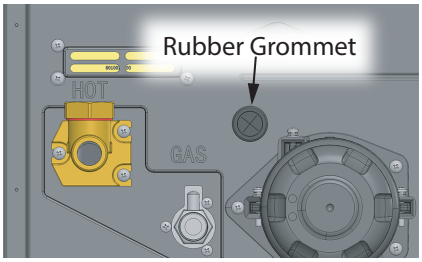

Figure 39 - Bottom of water heater - Grommet.

7. Use Figure 40 as a reference to locate the connection point for the Parent Cascade Unit. Use the single harness end of the Cascade Linking Cable to make the initial connection.

8. Follow steps 4-6 to route the double harness end of the Cascade Linking Cable to the printed circuit board on the first Child water heater.

9. If more than one Child water heater is used then route the single harness end of the second Cascade Linking Cable through rubber grommet on the bottom of the first Child water heater and connect it to the open harness on the first Cascade Linking Cable as shown in Figure 40.

10. Once all connections are made, the water heaters must be assigned their position in the system. Turn on the power supply to all of the water heaters, making sure there is no water flow.

11. On the Parent water heater simultaneously press and hold the SETTING and UP buttons until C00 appears. See Table 21 on page 56.

12 Press the UP arrow button to reach the C13 option, then press SETTING button to enter that option.

NOTE: C13 defines the number of Child water heaters that will be connected to the parent unit.

Enter the number of Child water heaters attached to the parent water heater and press Settings to load the number to memory. For example, if the system consists of four total water heaters, then enter 3 for three child heaters into C13. Press the SETTING button again to return to normal operation.

13 After the Parent water heater is configured, the Child water heaters must be configured. Perform the following steps on each Child water heater.

14 On each Child unit's UIM, press and hold both the SETTING and UP buttons until C00 appears.

15 Press the UP arrow button to reach the C14 option, then press the SETTING button to enter that option.

NOTICE: C14 defines the number assigned to each Child water heater connected to the parent water heater.

16 Enter number 2 for the first Child water heater and press the SETTING button to load the number to memory. Repeat this step assigning a sequencial number at each additional Child water heater.

17 Press and hold the SETTING button again to return to normal operation. NOTICE: A maximum 31 Child water heaters can be connected to a Cascade System of 32 total water heaters.

18 Verify all electrical connections and conduit connections are secure.

19 Follow the instructions in the Getting Started section of this manual.

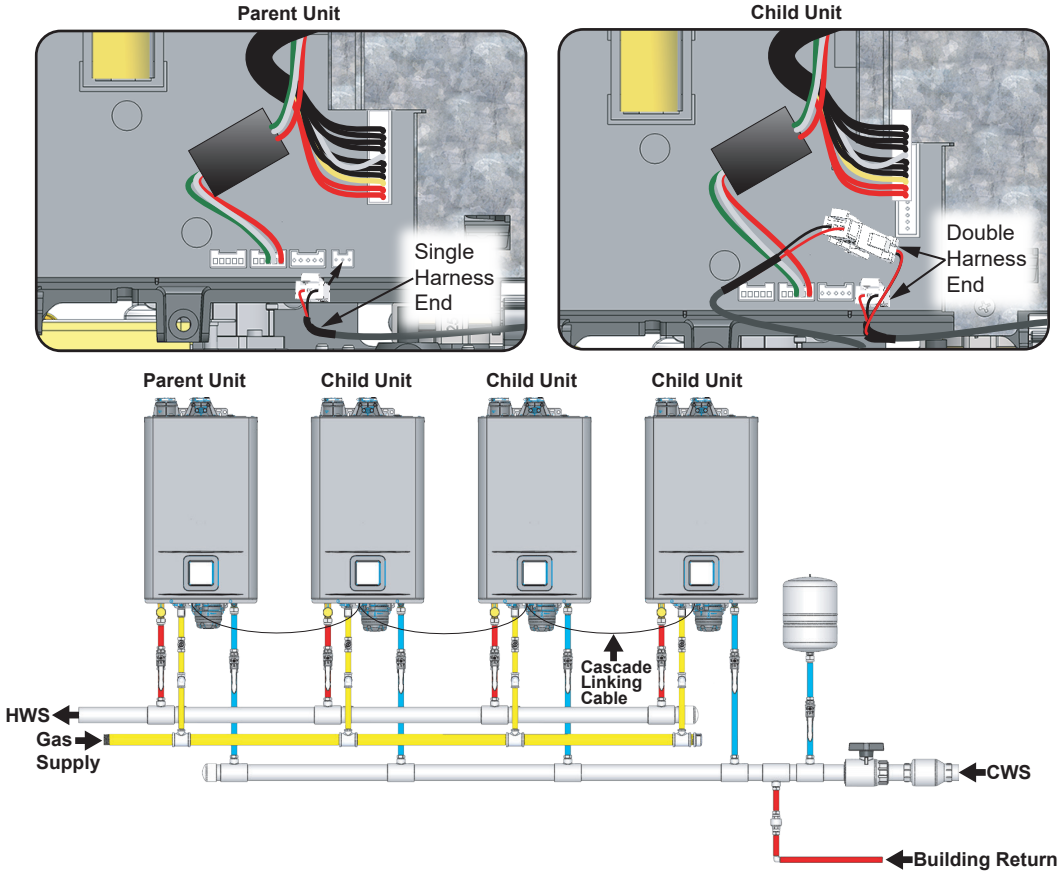

Figure 40 - Multi Unit Cascade Configuration

Accessory Connections

This system supports up to three accessories connected in series. NOTE: If multiple water heaters are used in a Cascade configuration, all accessories must be connected in series to the parent unit.

Follow the accessory kit instructions to access the control board.

Each accessory has a both a five pin female connector and a section of cable with a five pin male connector on the end. See Figure 41 The male connector connects to the control board or to the next accessory in the series. The five pin female connector allows another accessory to connect and create a series. Reference the figure below when creating a series of accessories. If the length of the accessories cord is not long enough, communication cables can be purchased to extend the length. These cables are available in 10 ft (3 m) and 32 ft (10 m) lengths. Connect the single five pin connector on communication cable to the five pin female connector on the accessory. The maximum wire length from the water heater (parent in a Cascade System) to the furthest accessory is 100 ft (30 m).

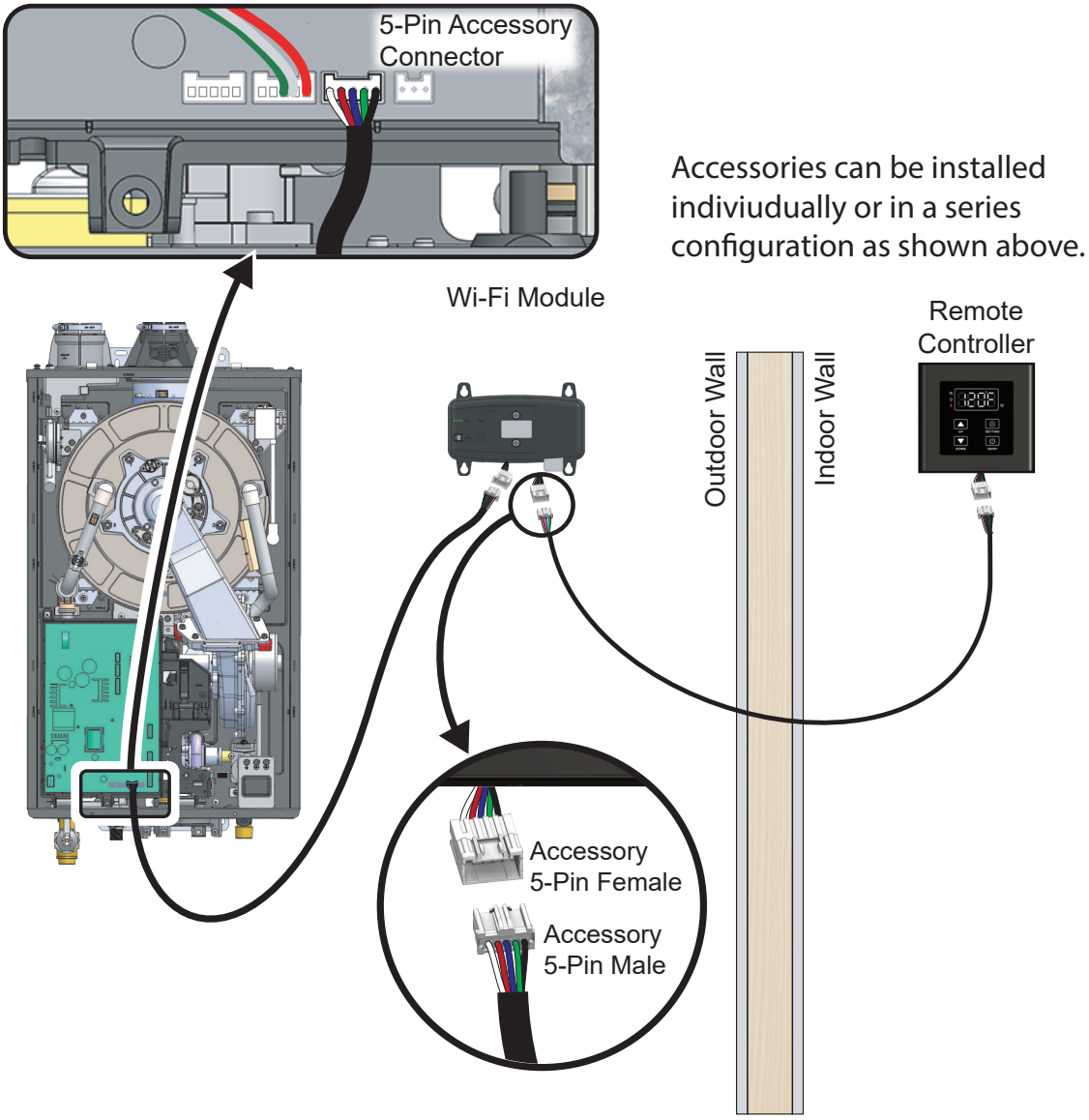

Figure 41 - Accessories installed in series

FOR YOUR SAFETY, READ BEFORE OPERATING

WARNING! IF YOU SMELL GAS:

- Do not try to start the water heater.
- Do not touch any electric switches; do not use any phone in your building.
- Immediately call your gas supplier from a neighbor's phone. Follow the gas supplier's instructions.
- If you cannot reach your gas supplier, call the fire department.
- Failure to observe these warnings could lead to fire or an explosion, resulting in severe injury or death.
  - ✔ Check the GAS and WATER CONNECTIONS for leaks before firing unit for the first time.
  - ✔ Open the main gas supply valve to the unit using only your hand to avoid any spark. Never use tools. If the knob will not turn by hand, do not try to force it; call a qualified service technician. Forced repair may result in a fire or explosion due to gas leaks.
  - ✔ Be sure to check for the presence of leaking gas toward the bottom of the unit because some gases are heavier than air and may settle towards the floor.
  - ✔ Check the GAS PRESSURE. Refer to "Gas Supply and Gas Pipe Sizing" on page 38.
  - ✔ Check for PROPER VENTING and COMBUSTIBLE AIR to the water heater.
  - ✔ Purge the GAS and WATER LINES to remove any air pockets.
  - ✔ Do not use this appliance if any part has been under water. Immediately contact a qualified installer or service agency to replace a flooded water heater. Do not attempt to repair the unit! It must be replaced!

Start-up Instructions

Read and understand these directions thoroughly before attempting to start-up the water heater. Make sure the water is plumbed correctly before attempting to start the water heater. Check the data plate on the right side of the water heater to ensure the correct gas type. Do not use this water heater with any gas other than that for which the heater is configured. If you have any questions or doubts, consult your gas supplier or gas utility company.

NOTICE: A newly installed water heater will have air in the gas line. It may take several attempts to clear all the air from the gas line.

1. Make sure the manual gas valve for the water heater's supply line is ON.
2. Plug the water heater into a grounded 120 VAC outlet or activate the breaker/disconnect, if the water heater is hardwired.
3. The user interface will display the current temperature setting. The default is 120°F.
4. To change the set temperature press the "UP" or "DOWN" buttons to raise or lower the temperature. See "Temperature Adjustment/Setting the Temperature" on page 53.

Shut-Down Instructions

1. Press the "ON/OFF" button and wait for the display to shut-off.

NOTICE: The power button on the water heater and remote DOES NOT disconnect power to the water heater. You must physically disconnect power to the water heater.

Emergency Shut-Down

Should overheating occur or the gas supply fail to shut off follow these steps.

1. Turn off gas supply to the water heater at the manual shut-off valve.
2. Press the "ON/OFF" button on the water heater.
3. Disconnect power to the water heater by unplugging it or by turning off the circuit at the breaker box, as appropriate.
4. Call a qualified person (licensed plumber, authorized gas company personnel, or authorized service technician for assistance.

FOR YOUR SAFETY READ BEFORE OPERATING

WARNING: If you do not follow these instructions exactly, a fire or explosion may result causing property damage, personal injury or loss of life.

A. This appliance does not have a pilot. It is equipped with an ignition device which automatically lights the burner. Do not try to light the burner by hand.

B. BEFORE OPERATING smell all around the appliance area for gas. Be sure to smell next to the floor because some gas is heavier than air and will settle on the floor.

WHAT TO DO IF YOU SMELL GAS

- **Do not try to light any appliance.**
- **Do not touch any electric switch; do not use any phone in your building.**
- **Immediately call your gas supplier from a neighbor's phone. Follow the gas supplier's instructions.**
- **If you cannot reach your gas supplier, call the fire department.**

C. Use only your hand to turn the gas shutoff valve. Never use tools. If the valve will not turn by hand, don't try to repair it. Call a qualified service technician. Force or attempted repair may result in a fire or explosion.

D. Do not use this appliance if any part has been under water. Immediately contact a qualified installer or service agency to replace a flooded water heater. Do not attempt to repair the unit! It must be replaced!

OPERATING INSTRUCTIONS

1. **STOP! Read the safety information above on this label.**
2. **Turn off all electric power to the appliance.**
3. **Do not attempt to light the burner by hand.**
4. **Turn the gas shutoff valve located on the outside of the unit to the closed position.**
5. **Wait five (5) minutes to clear out any gas. If you then smell gas, STOP! Follow "B" in the safety information above on this label. If you don't smell gas, go to the next step.**
6. **Turn the gas shutoff valve located on the outside of the unit to the open position.**
7. **Turn on all electrical power to the appliance.**
8. **If the appliance will not operate, follow the instructions in "To Turn Off Gas to Appliance," and call your service technician or gas supplier.**

TO TURN OFF GAS TO APPLIANCE

1. **Turn off all electric power to the appliance if service is to be performed.**
2. **Turn the gas shutoff valve located on the outside of the unit to the closed position.**

⚠ DANGER

⚠ **Vapors from flammable liquids will explode and catch fire causing death or severe burns.**
Do not use or store flammable products such as gasoline, solvents or adhesives in the same room or area near the water heater.

Keep flammable products:
1. Far away from heater
2. In approved containers
3. Tightly closed and
4. Out of reach of children.

Vapors:
1. Cannot be seen.
2. Are heavier than air.
3. Go a long way on the floor.
4. Can be carried from other rooms to the main burner by air currents.

Water heater has a main burner, which may come on at any time and will ignite flammable vapors.

Installation: Do not install water heater where flammable products will be stored or used unless the main burner is at least 18 in (457 mm) above the floor. This will reduce, but not eliminate the risk of vapors being ignited by the main burner.

Read and follow water heater warnings and instructions. If the owner's manual is missing, contact the retailer or manufacturer.

⚠ DANGER

1. Water temperature over 125°F (52°C) can cause severe burns instantly or death from scalds.
2. Children, disabled and elderly are at highest risk of being scalded.
3. Feel water before bathing or showering.
4. Temperature limiting valves are available. See manual.
5. To reduce the risk of scalding, install Thermostatic Mixing Valves (temperature limiting valves) at each point of use.
6. The outlet temperature of the water heater is set at 120°F (50°C). If you require water temperatures below this setting, follow the instruction manual.
7. Use this heater at your own risk. Test the water before bathing or showering. Do not leave children or an infirm person unsupervised. See your local water supply company [plumbing hardware retailer] for temperature limiting valves that are available.

A pressure relief valve listed as complying with the standard for Relief Valve and Automatic Gas Shutoff Devices for Hot Water Supply System, ANSI Z21.22 • CSA 4.4, shall be installed at the time of installation of the water heater in the location specified by the manufacturer. Local codes shall govern the installation of relief devices for safety operation of the water heater. The relief valve must not be removed or plugged.
No valve shall be placed between the relief valve and the water heater. The relief from the discharge of the pressure relief valve shall be disposed of in a suitable place where it will cause no damage. Also, there shall be no other reducing coupling or other restrictions installed on the discharge line to restrict flow.
Before operating the pressure relief valve manually, check that hot water coming out of the relief valve will discharge in a safe place to avoid contact with hot water and water damage.
See Installation Manual heading "PRESSURE RELIEF VALVES" for installation and maintenance of relief valve discharge line and other safety precautions.

California Prop 65:
⚠ **WARNING**: Cancer and Reproductive Harm - www.p65warnings.ca.gov

Figure 42 - Lighting Instructions

OPERATION

DISPLAY OVERVIEW

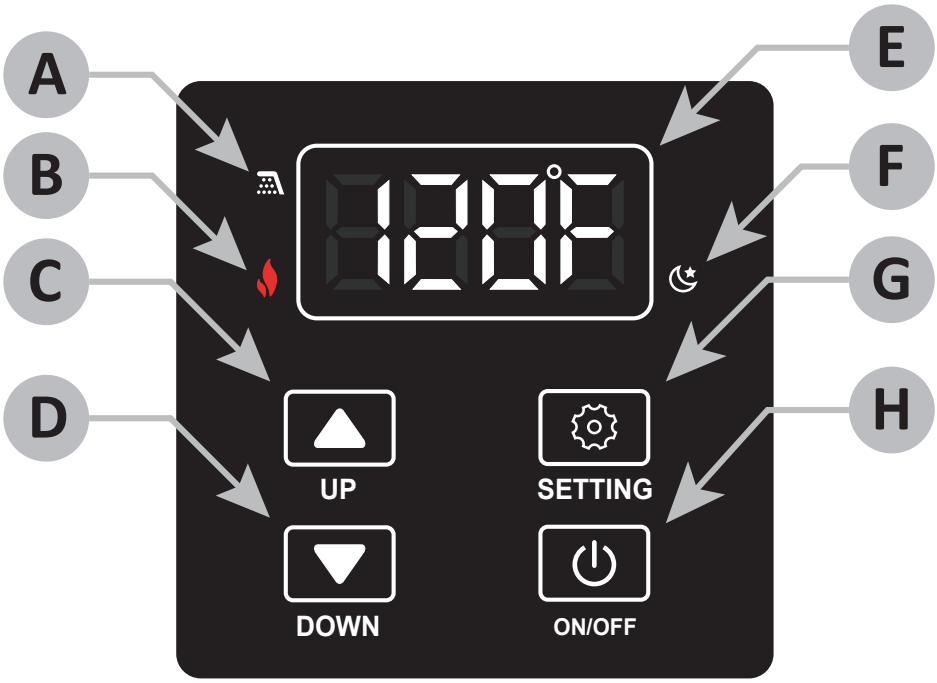

Figure 43 - User Interface Display Diagram

Table 17: User Interface Display

Item	Description
A	Water Flow Detected
B	Flame Detected
C	Up Button
D	Down Button
E	Display
F	Standby Mode
G	Settings Button
H	Operation ON/OFF Button

Temperature Adjustment/Setting the Temperature

With the installation steps completed, you may adjust the water heater's temperature setting if desired. The water temperature set point is factory set to 120°F (49°C). The temperature set point may be increased or decreased in increments by simply pressing the "UP" button or the "DOWN" button. To set the water heater to a temperature above 125°F (52°C), follow the procedure below.

⚠ WARNING! Higher temperatures increase the risk of scalding, but even at 120°F, hot water can scald. Install Thermostatic Mixing Valve(s) at each point-of-use to reduce the risk of scalding.

	Operation	Screen on the Controller Built-in Controller
1	Turn on the 120 VAC power supply to the water heater.	
2	Press the DOWN button to decrease the water temperature.	
3	Press the UP button to increase the water temperature. ⚠ **WARNING!** Higher temperatures increase the risk of scalding, but even at 120 °F (50 °C), hot water can scald (See Table 3). NOTE: You can only increase the water temperature to 125°F. Additional steps are required to increase the temperature above 125°F.	
4	To raise the temperature above 125°F, press and hold the SETTING button for 5 seconds then release. The display will alternately flash A00 and 125°F.	
	4a Press the SETTING button again. The temperature setting will flash. You can increase the temperature above 125°F.	
	4b Press the UP button to set the desired temperature.	
	4c Press the SETTING button once to lock in the selection, then hold the SETTING button to return the display to normal operation. The new set temperature will appear in the selected unit (Example: 130°F).	
	4d The display should show the updated temperature.	

Unit Conversion Mode

Table 18: Water Heater Temperature Set Points

°F	100	102	104	106	108	110	115	120	125	130	135	140	145	150	155	160	165	170	175	180	185
°C	38	39	40	41	42	43	46	49	52	54	57	60	63	65	68	71	74	77	79	82	85

Units of measure can be changed from Imperial to Metric and vice versa. For example, temperature can be changed from °F to °C. Flow rate will also change from gallons per minute to liters per minute when this setting is changed. Follow this procedure to change this setting.

Table 19: Unit Conversion

	Operation	Screen on the Controller Built-in Controller
1.	Turn on the 120 VAC power supply to the water heater.	
2.	Press the ON/OFF button on the controller in order to turn the controller on.	
3	The set point temperature will display as shown in the picture on the right (Example: 120°F).	
4	Press and hold the SETTING button for 5 seconds to access the water heater A Mode.	
5	The display will show code A00. Press the UP button once to display code A01. Press the SETTING button to show the current temperature setting. The temperature will flash.	
6	Press the UP button to alternate between F (Fahrenheit) and C (Celsius).	
7	Press the SETTING button to execute the change.	
8	Press and hold the SETTING button to return the display to normal operation. The new set temperature will appear in the selected unit (Example: 49°C).	

Configuration Mode (A Mode)

You can configure the water heater to accommodate your application from A Mode. Follow the procedure below to access A Mode:

1. Press and hold the SETTING button for 5 seconds to access A Mode.
2. Press the UP button or the DOWN button to search for the desired A Code.
3. If applicable, press the SETTING button to adjust the value. When the setting flashes, use the UP or DOWN arrows to change the setting.
4. Press the SETTING button again to confirm the new value selected is correct.
5. Press and hold the SETTING button for 5 seconds to return the display to normal operation.

Table 20: A Table Settings

CODE	DESCRIPTION	OPTIONS												
A00	Set Temperatures above 120°F/49°C	°F °C	120 49	130 54	140 60	145 63	150 65	155 68	160 71	165 74	170 77	175 79	180 82	185 85
A01	Temperature Unit	°F °C	°F, °C											

Configuration Mode (C Mode)

You can configure the water heater to accommodate your application from C Mode. Follow the procedure below to access C Mode:

1. Press and hold the “UP” button and the “SETTING” button for 5 seconds to access C Mode.
2. Press the “UP” button or the “DOWN” button to search for the desired C Code.
3. If applicable, press the “SETTING” button to adjust the value of the C Code using the “UP” and “DOWN” buttons. The value will flash.
4. Press the “SETTING” button again to confirm the new value selected is correct.
5. Press and hold the “UP” button and the “DOWN” button for 5 seconds to return the display to normal operation.

Table 21: C Table Settings

CODE	DESCRIPTION	OPTIONS	
C01	Elevation Settings in Feet (meters)	0: 1: 2: 3:	0 – 1,999 (default) (0 - 609) 2,000 – 5,399 (610 - 1,645) 5,400 – 7,699 (1,646 - 2,347) 7,700 – 10,100 (2,347 -3,078)
C03	Gas Type	0: 1:	Natural Gas (default) Propane
C07	Power Frequency	60:	60Hz (default)
C08	Vent material selection for high temperature application	0: 1:	Allowable outlet temperature less than 145°F (default) Allowable outlet water temperature more than 145°F
C13	Number of Child Units in Cascade System	0: 1-31:	No Cascade System (default) Identify Number of Child Units. This activates the Cascade System
C14	Cascade System Heater ID Number	1: 2-32:	Parent Heater (default) Individually set each child unit per user preference
C15	Descaling Mode	Off: dScL:	No Descale (default) Activate Descale Mode
C19	Common Vent	0: 1:	Disable (default) Enable
C20	Main Valve Controlled by Manual	0: 1:	Fully open. (default) 1 Completed Close.

NOTE This product is set to use PVC as the default vent pipe material. If the return water temperature for the application is higher than 140°F (60°C) to circulate back to the water heater, C08 must be set to ‘1’. Otherwise, the water heater will control maintain the exhaust and DHW temperatures below 149°F (65°C) and 140°F (60°C) respectively. Note When C08 is set to ‘1’ (factory default is ‘0’), CPVC, PP, or SS vent must be used for the exhaust pipe.

Configuration Mode (P Mode)

You can configure the water heater to accommodate your application from P Mode. Follow the procedure below to access P Mode:

1. Press and hold the “UP” button and “DOWN” button for 5 seconds to access P Mode.
2. Press the “UP” button or the “DOWN” button to search for the desired P Code.
3. Press and hold the “UP” button and the “DOWN” button for 5 seconds to return the display to normal operation.

Table 22: P Table Settings

CODE	DESCRIPTION	
P00	Heat Exchanger water outlet temperature	Heat Exchanger water outlet temperature
P01	Domestic water outlet temperature	Water outlet temperature
P02	Domestic water inlet temperature	Water inlet temperature
P03	Domestic water flow	0.1*Gallon/min OR 0.1*L/min
P04	Fan speed	Real-time Fan speed
P05	Not applicable for this unit	Not applicable for this unit
P06	Not applicable for this unit	Not applicable for this unit
P07	Bypass Water Valve position	The real-time position of bypass valve
P08	Main Water Valve position	The real-time position of main valve
P09	AD value of flame	The value to reflect flame combustion condition (the flame sensing needle detects this value) • Less than 140 when no flame • Bigger than 180 when flam exist. The larger the value, the greater the boiler load
P10	Venturi Stepper motor position	Venturi Stepper motor position
P11	Not applicable for this unit	Not applicable for this unit
P12	1st recent historical faults	The 1st recent error code
P13	2nd recent historical faults	The 2nd recent error code
P14	3rd recent historical faults	The 3rd recent error code
P15	Flue-gas temperature	flue-gas temperature
P16	Display Software Version No.	Front Board Software Version
P17	Controller Software Version No.	Main Board Software Version
P18	Not applicable for this unit	Not applicable for this unit
P19	Model Number	199
P20	Combustion time	8-digital,2 screen display (Hour)
P21	Ignition times record	8-digital,2 screen display
P22	Not applicable for this unit	Not applicable for this unit
P23	Not applicable for this unit	Not applicable for this unit

CODE	DESCRIPTION	
P24	Venturi 0 position combustion time	5-digital,2 screen display (Hour)
P25	Venturi 200 position combustion time	5-digital,2 screen display (Hour)
P26	Venturi 380 position combustion time	5-digital,2 screen display (Hour)
P27	Integrating water flow during combustion	8-digital,2 screen display (100L)
P28	380 MAX	The corrected value
P29	380 MIN	The corrected value
P30	200 MAX	The corrected value
P31	200 MIN	The corrected value
P32	0 MAX	The corrected value
P33	0 MIN	The corrected value
P36	Number of child machines	Default (0: Parent) Number of Children
P37	Child machine ID	Default (Parent) Child Unit ID Number
P38	BMS active	0 Inactive 1 Active

THIS PAGE INTENTIONALLY LEFT BLANK

Regular Maintenance

⚠ WARNING! Turn OFF the electrical power supply and close the manual gas shut-off valve and the manual water control valve before servicing. Failure to do so could result in serious personal injury or death.

Routine maintenance will help your water heater last longer and work better. Failure to perform required or recommended maintenance may void the warranty. If you cannot perform these routine maintenance tasks yourself, contact a qualified person:

IMPORTANT! Failure to perform required or recommended maintenance as described in the following sections may void the warranty.

The manufacturer recommends having the unit checked once a year or as necessary by a licensed technician or qualified person. If repairs are needed, any repairs should be done by a licensed technician.

- Clean the cold-water/inlet filter.
- The intake and venting system should be checked annually for any leaks, corrosion, blockages, or damage. Replace any damaged section of venting and clear any blockage.
- Keep the area around the water heater and terminations clear. Regularly ensure that the area around the water heater, vent termination, and air intake is free from dust, debris, and other contaminants. Remove any combustible materials, gasoline, flammable vapors, and liquids.
- If the pressure relief valve discharges periodically, it may be due to thermal expansion in a closed water supply system. Contact the water supplier or local plumbing inspector on how to correct this situation.
- The pressure relief valve must be manually operated annually to check for correct operation. Before operating the valve manually, check that it will discharge in a place for secure disposal.

  Note that a dripping Pressure Relief Valve is usually caused by the building's water pressure being too high and/or lack of a Thermal Expansion Tank.
- The condensate drain system must be inspected regularly that it drains properly in accordance with local codes or the manufacturer's instructions.
- The screen on the rain protection tray should be inspected annually and cleaned if needed.

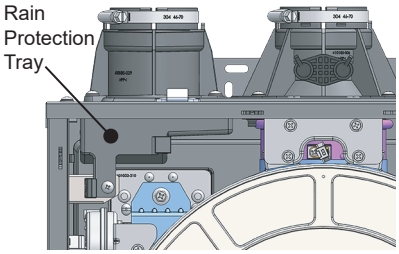

Figure 44 - Rain Protection tray

Freeze Protection System

This unit comes equipped with heating blocks as well as the auto-fire mode to protect it from damage associated with freezing. The auto-fire mode activates the burner for a short period of time.

For this freeze protection system to operate, there has to be electrical power to the unit. Damage to the heat exchanger caused by freezing temperatures due to power loss is not covered under the warranty. In cases where power losses can occur, consider the use of a backup power supply.

It is the installer's responsibility to be aware of freezing issues and take all preventative measures. The manufacturer will not be responsible for any damage to the heat exchanger as a result of freezing.

NOTICE: Only pipes within the water heater are protected by the freeze protection system. Any water pipes (hot or cold) located outside the unit will not be protected. Properly protect and insulate these pipes from freezing. See "Available Accessories" on page 15 for the Cartridge Freeze Protection Kit. .

If you will not be using your heater for a long period of time or power has been lost during freezing conditions:

1. Completely drain the water out of the unit (see "Unit Draining & Power Outage (Freeze Protection)" on page 61.
2. Disconnect power to your water heater.

Unit Draining & Power Outage (Freeze Protection)

1. Close the manual gas shutoff valve.
2. Disconnect power to the water heater by unplugging it or by turning off the circuit at the breaker box.
3. Close the cold inlet water valve.
4. Open all hot water taps in the building. When the residual water flow has ceased, close all hot water taps.
5. Drain the Bypass Cartridge: Have a bucket or pan to catch water from the By-Pass Cartridge. To remove the By-Pass Cartridge, remove and keep the 3 screws securing the cartridge in place. Pull down to remove it from the water heater. Empty the water out of the cartridge into the bucket.
6. Wait a few minutes to ensure all water has completely drained from the unit.
7. Keep the cold water valve closed. Keep the gas valve closed. Keep supply power disconnected.
8. To restore the unit to operation reinstall the By-Pass Cartridge with 3 screws removed earlier.
9. Open the cold inlet water valve. Check all water connections for leaks. If leaks are found, shut-off the cold water inlet valve and immediately fix any leaks. If no leaks are present proceed to the next step.
10. Reconnect power to the water heater.
11. Open the manual gas shutoff to the water heater.
12. If the set temperature is not displayed, press the ON/OFF button.
13. NOTE: If any errors occur shutoff the water immediately.

Condensate Drain

- Inspect the drain lines for any clogs and clear.
- Check the drain lines for a downward slope. Correct any lines where water does not drain freely.
- Inspect the built-in condensate trap drain lines for debris. Disconnect the lines and drain to remove the debris.
- If a neutralizer is installed, check the pH. Replace the neutralizer if the pH of the outlet water is below 6.0.

Inlet Water Filter

If this filter is clogged, water will not be supplied to the water heater properly.

1. Close the manual gas shutoff valve.
2. Disconnect power to the water heater by unplugging it or by turning off the circuit at the breaker box.
3. Close the inlet water valve.
4. Open all hot water taps in the building. When the residual water flow has ceased, close all hot water taps.
5. Drain the By-Pass Cartridge: Have a bucket or pan to catch water from the By-Pass Cartridge. To remove the By-Pass Cartridge, remove and keep the 3 screws securing the cartridge in place. Pull down to remove it from the water heater. Empty the water out of the cartridge into the bucket. For detailed instructions see “Bypass Cartridge Removal” on page 64.
6. Wait a few minutes to ensure all water has completely drained from the unit.
7. Unscrew the inlet water filter and remove it from the water heater.
8. Clean the filter: Check the water filter located within the cold inlet. With a tiny brush, clean the water filter of any debris which may have accumulated.
9. Screw the inlet water filter back into place. Hand- tighten only. NOTICE: Handle with care and verify the O-ring is not dirty or damaged.
10. To restore the unit to operation reinstall the By-Pass Cartridge with 3 screws removed earlier. For detailed instructions see “Bypass Cartridge Installation” on page 64.
11. Turn ON the cold water supply to the water heater at the cold inlet valve. The system will fully pressurize and any leaks at water connections will be apparent. Correct any leaks immediately.
12. Turn ON the gas supply to the water heater at the manual gas shut off valve.
13. Restore power to the water heater. The water heater is now ready for operation.

Descaling (Flushing)

During operation, a tankless water heater (supplied with hard water) accumulates hard water deposits on the interior surfaces of the heat exchanger. These deposits make it difficult to transfer heat into the water, lowering the water heater's efficiency and causing excessive wear to the components. Removing any deposits is essential to the proper operation and longevity of the water heater. The X3 model should not require descaling, however, if you choose to descale the water heater **you must use the Bypass cartridge.** A Bypass cartridge can be ordered from the manufacturer, p/n: 100374700.

NOTICE: DO NOT descale the water heater using the X3 cartridge as this may damage the cartridge media.

Tools and Materials:

- Submersible transfer pump
- 3 gallons of 5% acidity white vinegar (food grade), available from most grocery stores
- Washing machine hoses (2)
- Five gallon bucket
- Water heater isolation valve kits, installed on both the cold water inlet and hot water outlet of the water heater X3 Bypass Cartridge (See Figure 46)

The water heater has a descaling mode that will do the following to help descale the water heater:

- Locks out the heater firing operation so the heater remains in standby.
- The flow control valve will stay in the fully open position
- The bypass water valve will move to the fully closed position to force the descaling solution through the heat exchanger.
- The freeze protection system will not be active.

1. Close the isolation valves (C & D) to stop the main inlet/outlet flow of water to the house. See Figure 46.
2. Pour the white vinegar (3 gallons) into the five gallon bucket. See Figure 47.
3. Connect inlet hose to the transfer pump's discharge outlet. Connect its opposite end to the inlet hose connection at the cold water inlet's isolation valve. See Figure 47.
4. Place the pump in the bucket of vinegar.
5. Connect the second hose to the outlet hose connection at the hot water outlet. Place its loose end into the bucket with the vinegar. See Figure 47.
6. Open the hot and cold service valves (A & B). See Figure 47..
7. Activate the water heater's descaling mode by entering the C mode.
   A. Simultaniously press and hold the UP arrow and Setting button for approximately 6 seconds.
   A. The display will flash C00.
   B. Press the UP button or DOWN button to cycle to C15.
   C. Press the SETTING button
   D. The display will flash OFF.
   E. Press the UP button or DOWN button to cycle to dScl

Figure 45 - UIM display

   F. Press the SETTING button to activate the descaling mode.

7. Turn power to the pump on and let it run for approximately 45 minutes.
8. Shut off power to the pump when descaling is complete.
9. Close service valves A & B. See Figure 47.
10. If possible connect the outlet hose to a drain or outside in order to flush the water heater. If unable, go to step 12.
11. Open valve A to flush the water heater and remove loose scale and vinegar. Suggested flush time is approximately 10 minutes. Go to step 14.
12. If unable to relocate the outlet hose to a drain or outside, confirm valves A and B are closed.
13. Open valves C & D.
14. Open the nearest hot water fixture to flush the water heater of any remaining vinegar. Suggested flush time is approximately 10 minutes. **NOTICE:** DO NOT use a combined hot and cold fixture typically found in a shower.
15. When flushing is complete, close all valves and remove all hoses.
16. Press the SETTING button on the water heater's controller.
17. Use the UP button or DOWN button to change the display from dScL to OFF.
18. Press the SETTING button on the water heater's controller.
19. Simultaniously press and hold the UP arrow and Setting button for approximately 6 seconds to enter normal operating mode.
20. Turn on the gas supply valve.
21. Open valves C & D.
22. Open the nearest hot water fixture for a short time to test fire the heater and make sure there are no issues.

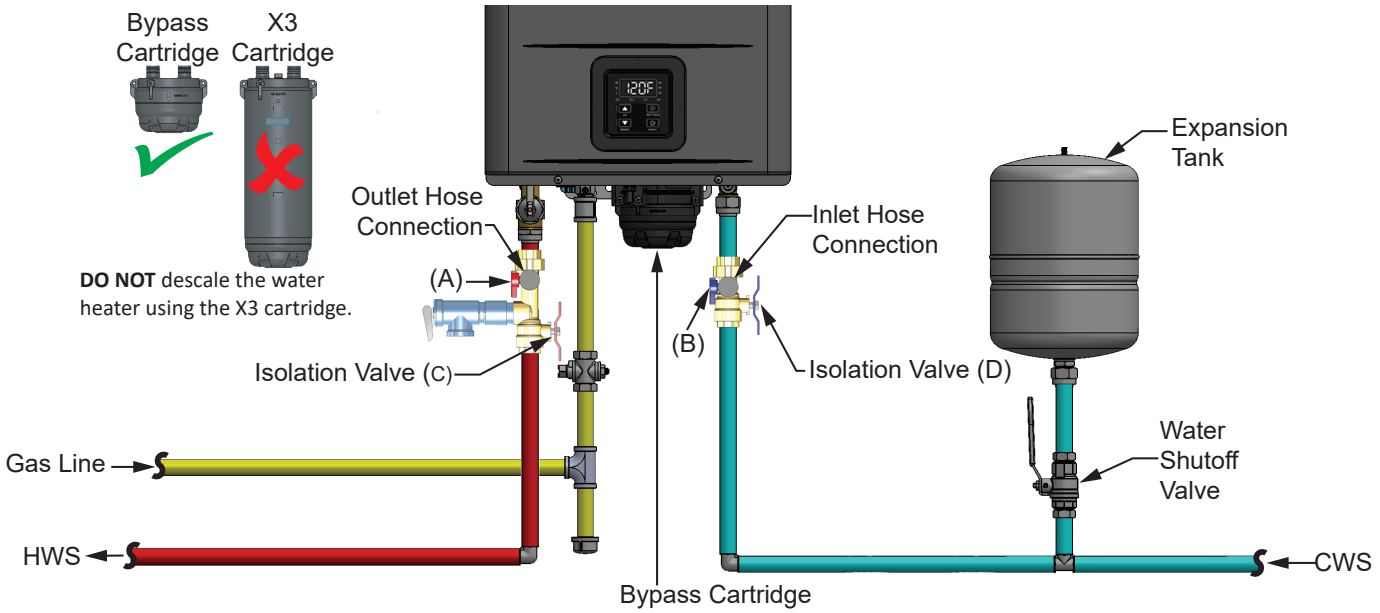

NOTE: Condensate Drain not shown for clarity.

Figure 46 - Descaling the water heater

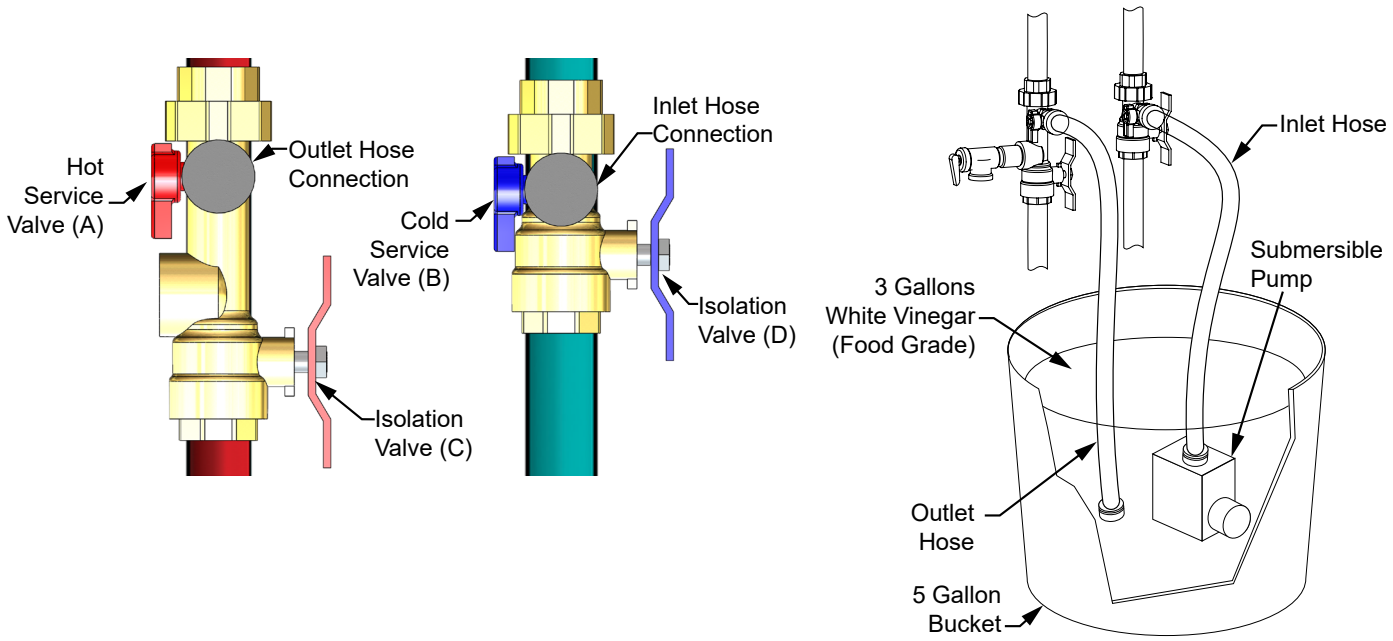

Figure 47 - Isolation valve connection points

Bypass Cartridge

The Bypass cartridge comes pre-installed in the water heater.

⚠ WARNING! DO NOT operate water heater without the Bypass cartridge installed into the manifold located on the underside of the water heater cabinet. Failure to do so may result in leaks and potential property damage.

The Bypass Cartridge must be installed into the manifold located on the underside of the heater cabinet prior to operation of the unit

Figure 48 - Bypass Cartridges

Bypass Cartridge Removal

1. Disconnect power to the water heater by unplugging it or by turning off the circuit at the breaker box.

2. Close the cold inlet water valve.

3. Open all hot water taps in the building. When the residual water flow has ceased, close all hot water taps.

4. Remove the two long (M4-25mm) screws Ⓑ and one short (M4-12mm) screw Ⓐ securing the Bypass Cartridge to the manifold located on the underside of the water heater cabinet. Set the screws aside in a safe place for re-installation. Place a bucket under the water heater cabinet to collect any residual water. Note the order of the screws when removing them. Reference Figure 49.

5. Pull down to remove the Bypass Cartridge from the water heater.

NOTICE: The Bypass Cartridge will be full of water. Use caution not to tilt the cartridge until the water has been drained.

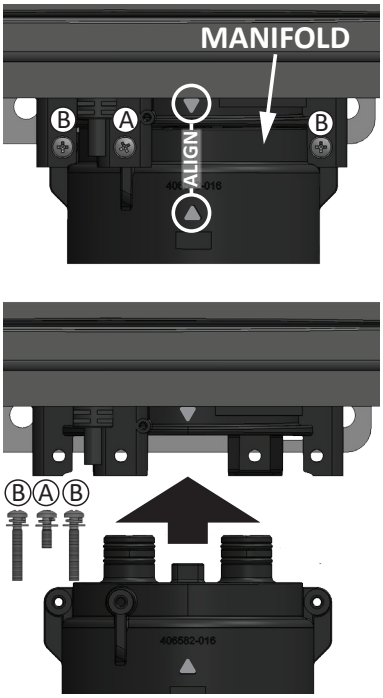

Figure 49 - Bypass Cartridge Installation

Bypass Cartridge Installation

1. Locate the three (3) screws removed earlier. Set the one M4-12mm screw Ⓐ and two M4-25mm screws Ⓑ aside in a safe place for re-installation.

2. Locate the Bypass Cartridge.

   NOTICE: Inspect o-rings for damage or debris. Handle with care and verify lubricant has been properly applied to o-rings.

3. Insert the Bypass Cartridge into manifold and secure with the two long screws and one short screw previously set aside in Step 1.

NOTICE: When inserting the cartridge, push up until the screw holes align. Some resistance is normal. See Figure 49.

Insert and snug all three screws by hand. Use a screwdriver to tighten the two Ⓑ screws first and lastly tighten screw Ⓐ. DO NOT use a drill or impact driver to tighten the screws.

General Troubleshooting

Table 23: Troubleshooting Chart

	PROBLEM	SOLUTIONS
Temperature and Amount of Hot Water	It takes a long time to get hot water at the fixtures.	• The time it takes to deliver hot water from the water heater to your fixtures depends on the length of piping between the two. The longer the distance or the bigger the pipes, the longer it will take to get hot water.
	The water is not hot enough.	• Check the set temperature of the water heater and adjust, if necessary. • Check cross plumbing between the cold water lines and hot water lines. • Is the gas supply valve open fully? • Is the gas line sized properly? • Is the gas supply pressure sufficient? • Check if the Point-of-Use mixing valves are set correctly, if they are installed.
	The water is too hot.	• Is the set temperature set too high?
	The hot water is not available when a fixture is opened.	• Make sure the unit has 120 VAC, 60 Hz power supply and power frequency is set to 60 hz. • Verify the operation setting is ON by viewing the UIM. If the set temperature is showing or you press the UP arrow to display the set temperature, then the operation setting is ON. If the display is blank and nothing appears when pressing the UP button, then the operation state is set to OFF. Press the ON/OFF button to activate the heater. The set temperature will display when set to ON. • Is the gas supply valve open fully and within the allowable gas pressure range? • Is the water supply valve open fully? • Is the filter on the cold water inlet clean? • Is the hot water fixture sufficiently open to draw at least 0.4 GPM (1.5 L/min) through the water heater? • Is the unit frozen? • Is there enough gas in the tank / cylinder? (For Propane models)
	The hot water turns cold and stays cold.	• Is the flow rate enough to keep the water heater running? • If there is a recirculation system installed, does the recirculation line have enough check valves? • Is the gas supply valve open fully? • Is the filter on the cold water inlet clean? • Are the fixtures clean of debris and obstructions?
	Fluctuation in hot water temperature.	• Is the filter on the cold water inlet clean? • Is the gas line sized properly? • Is the supply gas pressure sufficient? • Check for cross connection between the cold water lines and hot water lines.
WATER HEATER	Unit does not ignite when water goes through the unit.	• Is the flow rate over 0.4 GPM (1.5 L/min)? • Check for the filter on the cold water inlet. • Check for reverse connection and cross connection. • If you use the remote controller and/or built-in controller, is the power button turned on? • Check if the inlet temperature is too high. If it is too close to the set temperature, the water heater will not activate.
	The fan motor is still spinning after operation has stopped.	• This is normal. After operation has stopped, the fan motor keeps running in order to re-ignite quickly, as well as purge all the exhaust gas out of the flue.
	Unit sounds abnormal while in operation	• Contact Technical Support Department.

TROUBLESHOOTING

Error Codes

The water heater has self-diagnostic functions for safety and convenience when troubleshooting.

If there is a problem with the installation or the unit, the error code associated with that failure will be displayed on the built-in controller or remote controller. The display will flash E and the three digit number. It will show leading zeros. Example: E002

Error codes in the cascade system are different. The heater number and E### (three digit number) will alternately flash on the parent unit's user interface module (UIM) and temperature remote controller. The child unit in error will flash the E### (three digit number) on it's UIM.

Consult the the table below for the description of each error code.

Fault Analysis of Error Codes

If the water heater is displaying an error code, please check the following. After checking, consult with the manufacturer.

Table 24: Error Code Fault Analysis

Error Code	Error Type	Procedure
E002	Hi-Limit Switches	1. Manual Hi-Limit Switch on water outlet tripped. Check the switch for proper operation. Press the reset button (center of the switch), to reset it. NOTE: You will hear and feel the switch click when resetting it. If the high limit switch continues to trip contact a qualified service technician. 2. Automatic Hi-Limit Switch on burner door tripped. If the automatic Hi-limit switch trip has occurred, it cannot be reset and must be replaced. Contact a qualified service technician.
E006	PCB Hardware Fault	1. Check PCB wiring for loose, damaged, or cut wires/connectors. Correct any loose connections and replace any damaged wires/connectors. If all wires/connectors are intact, replace the PCB.
E010	Frequency Fault	1. PCB has detected an incorrect power supply frequency. Note the default frequency is 60 Hz. Confirm that C07 is set to the correct frequency of the supply power. See Table 21 to access modes 2. If the setting is correct and the error still occurs contact a qualified service technician.
E011	PCB - Memory	1. The water heater will continue to operate while in this error code is flashing, however, the recirculation pump will be disabled. If this heater is part of a cascade system, then the system will be affected based on the heater's setting. • Parent Heater: The cascade system will not operate. Remove this heater from the cascade system and set a different heater as the Parent. • Child Heater: This heater will not operate. The rest of the cascade system will continue to run.
E036	Flame Failure	**WARNING! Working on an energized circuit can result in severe injury or death from electrical shock.** 1. Check the flame sensor wire for a short or disconnection. Correct any loose connections and replace any damaged wire/connector. If the error still occurs, contact a qualified service technician.

Error Code	Error Type	Procedure
E037	False Flame Detection	**WARNING! Working on an energized circuit can result in severe injury or death from electrical shock.** 1. Check for a visible flame through the sight glass while water is not running through the water heater. If the error still occurs, immediately shut-off the water heater and contact a qualified service technician. 2. Check the flame sensor wire for a short or disconnection. Correct any loose connection and replace any damaged wire/connector. If the error still occurs, contact a qualified service technician.
E038	Ignition Failure	**WARNING! Working on an energized circuit can result in severe injury or death from electrical shock.** 1. Check for a visible flame through the sight glass. 2. Check the flame sensor wire and igniter wire for a short or disconnection. Correct any loose connections and replace any damaged wire/connector. If the error still occurs, contact a qualified service technician.
E041	Outlet Water Over-temp.	1. Verify the thermistor reading with the water outlet temperature. 2. Remove the outlet thermistor (do not lose the o-ring) and check for any dirt or debris. Clean with an Emery cloth. If the thermistor is damaged, replace it. If the error still occurs, contact a qualified service technician.
E049	Exhaust Thermistor Failure	1. Remove the thermistor (do not lose the o-ring) and check for any dirt or debris. Clean with an Emery cloth. If the thermistor is damaged, replace it. 2. Check the Thermistor sensor wire for a short or disconnection. Correct any loose connections and replace any damaged wire/connector. If the error still occurs, contact a qualified service technician.
E050	Inlet Thermistor Failure	1. Remove the thermistor (do not lose the o-ring) and check for any dirt or debris. Clean with an Emery cloth. If the thermistor is damaged, replace it. 2. Check the Thermistor sensor wire for a short or disconnection. Correct any loose connections and replace any damaged wire/connector. If the error still occurs, contact a qualified service technician.
E051	Outlet Thermistor Failure	1. Remove the thermistor (do not lose the o-ring) and check for any dirt or debris clean with Emery cloth. If the thermistor is damaged, replace it. 2. Check the Thermistor sensor wire for a short or disconnection. Correct any loose connections and replace any damaged wire/connector. If the error still occurs, contact a qualified service technician.
E052	Heat Exchanger Thermistor Failure	1. Remove the thermistor (do not lose the o-ring) and check for any dirt or debris clean with Emery cloth. If the thermistor is damaged, replace it. 2. Check the Thermistor sensor wire for a short or disconnection. Correct any loose connections and replace any damaged wire/connector. If the error still occurs, contact a qualified service technician.

TROUBLESHOOTING

Error Code	Error Type	Procedure
E383	Inlet Water Over-Temp.	1. Verify the inlet water temperature is not above the water heater's set temperature. 2. Remove the inlet thermistor (do not lose the o-ring) and check for any dirt or debris. Clean with Emery cloth. If the thermistor is damaged, replace it. 3. Check the Thermistor sensor wire for a short or disconnection. Correct any loose connections and replace any damaged wire/connector. If the error still occurs. Contact a qualified service technician.
E384	False Flame Detection	**WARNING! Working on an energized circuit can result in severe injury or death from electrical shock.** 1. Look through the sight glass for a flame. If the flame is present, immediately shut off the gas to the water heater. Contact a qualified service technician before attempting to use the water heater. 2. If no flame is present and the flame LED on the display is lit, Check the flame sensor wire for a short or disconnection. Correct any loose connections and replace any damaged wire/connector. If the error still occurs, contact a qualified service technician.
E385	Gas Valve - SV1	1. The PCB detects an incorrect voltage from the gas valve solenoid valve 1 (SV1). Correct any loose connections and replace any damaged wire/connector. If the error still occurs, contact a qualified service technician to replace the gas valve.
E388	Bypass Valve	1. Correct any loose connections and replace any damaged wire/connector. 2. Follow the draining procedure on page 61 to properly drain the water heater. Remove the Bypass valve and inspect for any debris or damage. Replace if needed.
E392	Fan - False Start	1. Check the fan motor wiring. Correct any loose connections and replace any damaged wire/connector. If the error still occurs, contact a qualified service technician.
E393	Fan - Signal Loss	1. Check the fan motor wiring. Correct any loose connections and replace any damaged wire/connector. If the error still occurs, contact a qualified service technician.
E394	Fan - Target Speed	1. Check the fan motor wiring. Correct any loose connections and replace any damaged wire/connector. 2. With the water heater power disconnected, check the exhaust vent and air intake piping for any blockages. Remove any blockages. 3. If the error still occurs, contact a qualified service technician.
E400	Communication Fault with UIM	1. Check the UIM wiring. Correct any loose connections and replace any damaged wire/connector. If the error still occurs, contact a qualified service technician.

Error Code	Error Type	Procedure
E401	Communication Fault with Remote Controller	1. Check the Remote Controller wiring. Correct any loose connections and replace any damaged wire/connector. 2. Only one remote controller can be installed, remove any additional remote controllers. 3. If the error still occurs, contact a qualified service technician.
E402	Communication Fault in Cascade System	1. Check the Cascade wiring. Correct any loose connections and replace any damaged wire/connector. 2. Cycle the heater's power off/on if the cascade wiring was disconnected while the system still had power. 3. If the error still occurs, contact a qualified service technician.
E403	Fan - Low Speed	1. Check the fan motor wiring. Correct any loose connections and replace any damaged wire/connector. 2. With the water heater power disconnected, check the exhaust vent and air intake piping for any blockages. Remove any blockages. 3. If the error still occurs, contact a qualified service technician.
E411	Heat Exchanger - Water Overheating.	1. Remove the heat exchanger thermistor (do not lose the o-ring) and check for any dirt or debris. Clean with an emery cloth. If the thermistor is damaged, replace it. 2. Check the Thermistor sensor wire for a short or disconnection. Correct any loose connections and replace any damaged wire/connector. If the error still occurs, contact a qualified service technician.
E412	Flame Signal Fault	1. Remove the flame sensor (do not lose the gasket) and check for any dirt or debris on the surface of flame sensor rod, also inspect inside of the installation hole of the heat exchanger. Remove any debris on the surface and inside the hole. 2. Reinstall install the flame sensor rod (secure with two screws). 3. If the error still occurs, contact a qualified service technician.
E413	Flame Sensor	1. Check the flame sensor wire for a short or disconnection. Correct any loose connections and replace any damaged wire/connector. 2. With the water heater power disconnected, check the exhaust vent and air intake piping for any blockages. Remove any blockages. 3. Verify the water heater has sufficient combustion air, reference the Combustion and Venting Installation section in the manual. 4. Check the installation area for corrosive elements, reference the see Installation Environment section in the manual. 5. If the error still occurs, contact a qualified service technician.

TROUBLESHOOTING

Error Code	Error Type	Procedure
E414	PCB-Flame Sensor Circuit	1. Check the flame sensor wire for a short or disconnection. Correct any loose connections and replace any damaged wire/connector. 2. If the error still occurs, contact a qualified service technician to replace the PCB.
E415	Gas Valve Fault	1. Check the gas valve wiring for a short or disconnection. Correct any loose connections and replace any damaged wire/connector. 2. If the error still occurs, contact a qualified service technician.
E416	Analog/Digital (AD) Value Fault	1. Check the outlet thermistor sensor wire for a short or disconnection. Correct any loose connections and replace any damaged wire/connector. If the error still occurs, contact a qualified service technician. 2. Remove the outlet thermistor (do not lose the o-ring) and check for any dirt or debris. Clean with an Emery cloth. If the thermistor is damaged, replace it. 3. If the error still occurs, contact a qualified service technician to replace the PCB.
E417	Flame Sensor Fault	1. Check the flame sensor wire for a short or disconnection. Correct any loose connections and replace any damaged wire/connector. 2. Check the inlet & heat exchanger thermistor sensor wires for a short or disconnection. Correct any loose connections and replace any damaged wire/connector. 3. Remove the inlet & heat exchanger thermistors (do not lose the o-ring) and check for any dirt or debris. Clean with an Emery cloth. If the either thermistor is damaged, replace it.
E418	Exhaust High Temperature	1. With the water heater power disconnected, check the exhaust vent and air intake piping for any blockages. Remove any blockages. 2. Remove the exhaust thermistor (do not lose the o-ring) and check for any dirt or debris clean with Emery cloth. If the thermistor is damaged, replace it. 3. If the error still occurs, contact a qualified service technician.
E420	Gas Valve - SV2	1. PCB detects an incorrect voltage from the gas valve's SV2. Correct any loose connections and replace any damaged wire/connector. If the error still occurs contact a qualified service technician to replace the gas valve.
E421	Pressure Switch	1. Check the pressure switch wires for a short or disconnection. Correct any loose connections and replace any damaged wire/connector. 2. Check the pressure tube for loose connections, debris, or blockages. Correct any issue immediately. 3. With the water heater power disconnected, check the exhaust vent and air intake piping for any blockages. Remove any blockages. 4. If the error still occurs, contact a qualified service technician.
E422	Venturi Assembly	1. Check the venturi assembly wires for a short or disconnection. Correct any loose connections and replace any damaged wire/connector. 2. If the error still occurs, contact a qualified service technician.

Error Code	Error Type	Procedure
E426	Condensate Drain Overflow	1. Place a bucket under the water heater to catch any water. 2. With the water heater off, check the condensate drain for any blockages. Remove any blockages. 3. With the water heater off, check the condensate trap for any blockages. Remove any blockages. 4. Check the condensate drain wires for a short or disconnection. Correct any loose connections and replace any damaged wire/connector. 5. Verify the condensate drain line is installed correctly, reference “Condensate Drain” on page 45.
E427	Flow Control Valve	1. Check the flow control valve wires for a short or disconnection. Correct any loose connections and replace any damaged wire/connector. 2. Remove the flow control valve and inspect for any debris or damage. Replace if needed. First follow the draining procedure in the Unit Draining & Power Outage section in this manual.
E428	Flow Sensor - Cascade Only	1. Verify the water heater’s operation is enabled. The heater’s UIM will display the set temperature when enabled. If it is disabled, press the heater’s ON/OFF button to enable the heater’s operation. 2. Verify that the heater’s water shutoff valves are open. 3. Check the flow sensor wires for a short or disconnection. Correct any loose connections and replace any damaged wire/connector. 4. Drain the water heater following Unit Draining & Power Outage section in this manual. 5. Remove the flow sensor and inspect for any debris or damage. Replace if needed. 6. Remove and clean the inlet water filter.
E429	Flow Control Valve Fault - Cascade Only.	1. Check the flow control valve wires for a short or disconnection. Correct any loose connections and replace any damaged wire/connector. 2. Remove the flow control valve and inspect for any debris or damage. Replace if needed. First follow the draining procedure in the Unit Draining & Power Outage section in this manual.
E430	Combustion Suspended Due To High Flue-Gas Temperature	1. Vent material selected for high-temperature applications and set C08 = 1 in C-mode. Refer Table 7: Plastic Vent Pipe Table

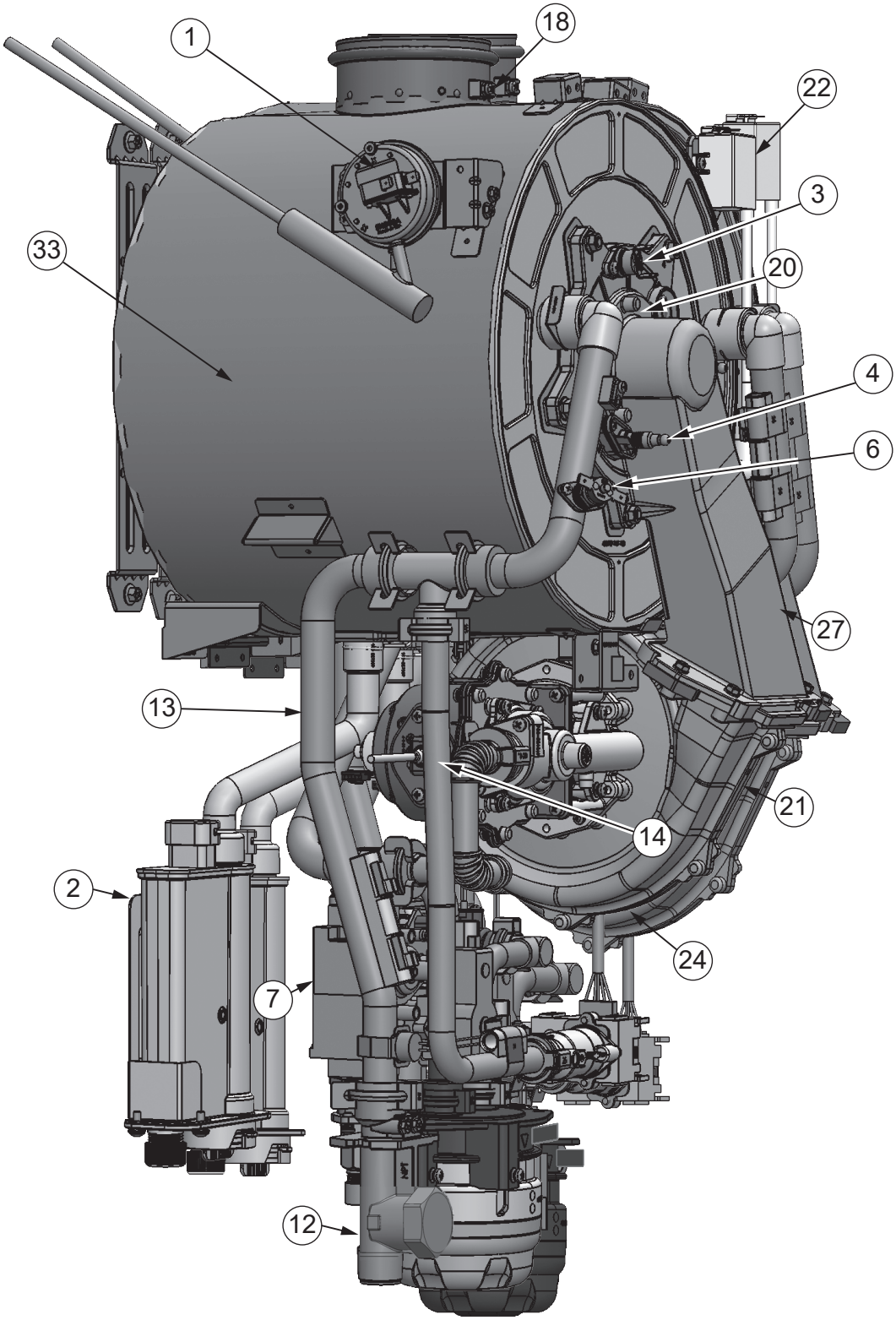
1
18
22
3
33
20
4
6
27
13
21
14
2
24
7
12

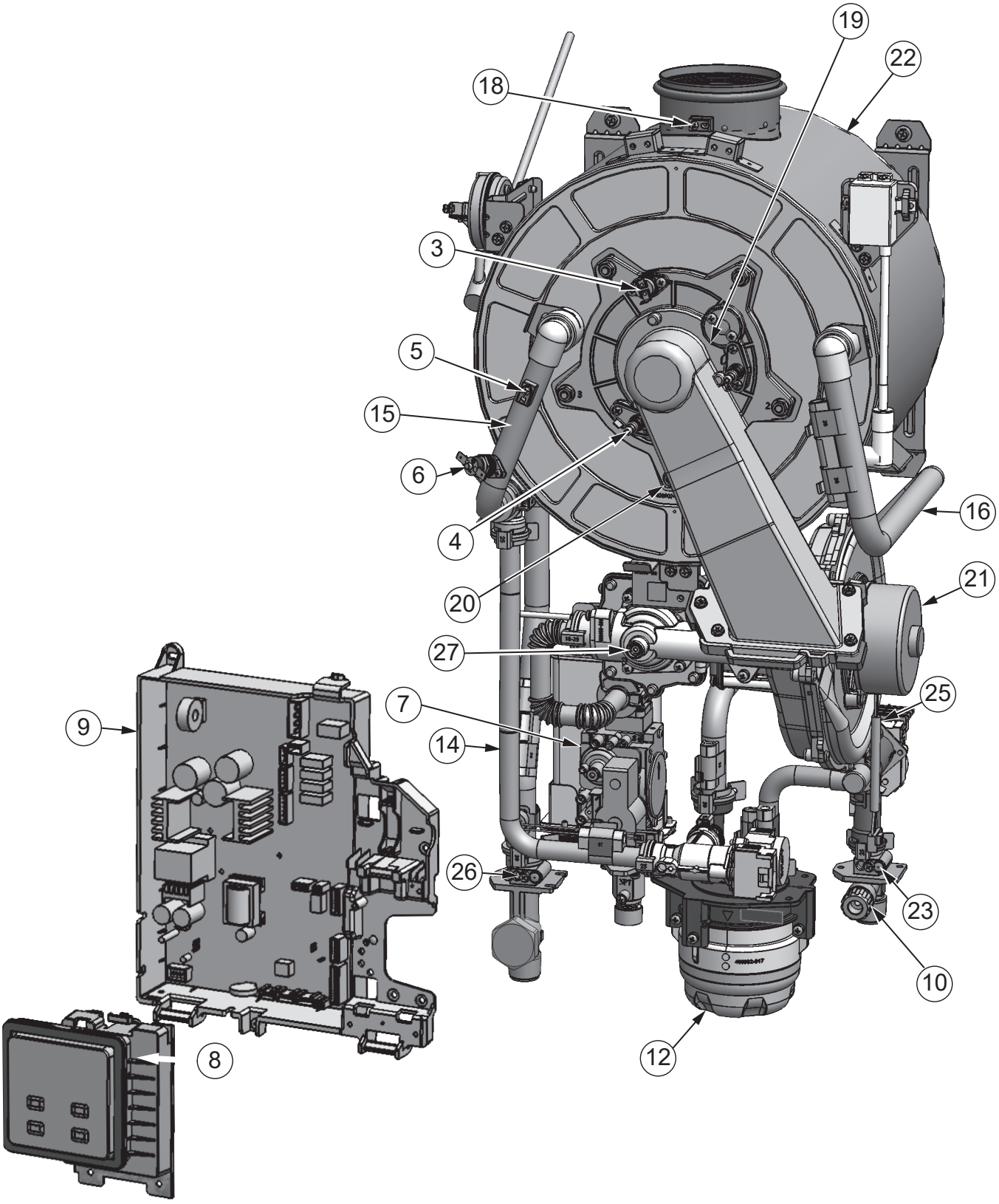
19
22
18
3
5
15
6
4
20
16
21
27
25
7
9
14
26
23
10
12
8

COMPONENT LIST

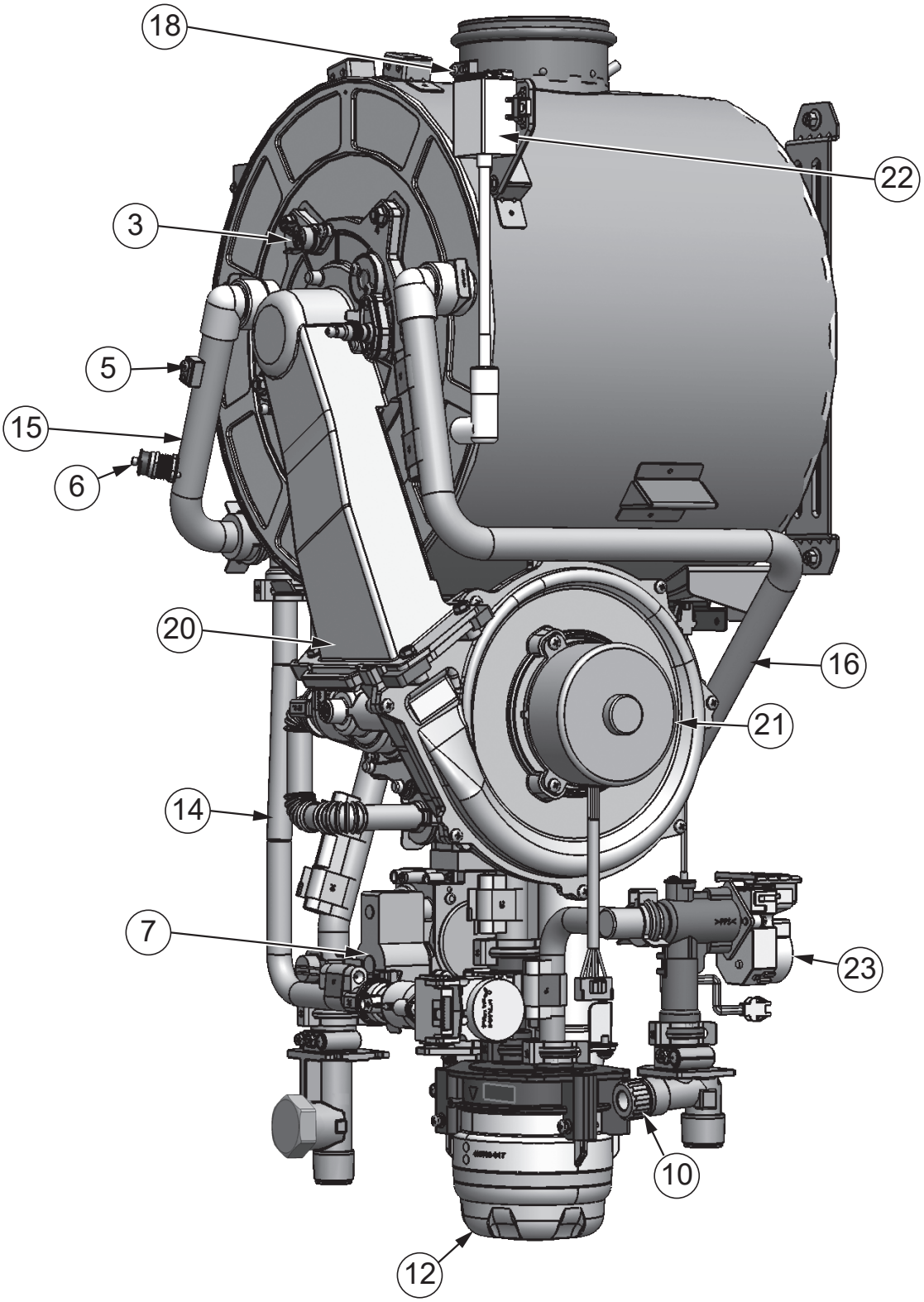

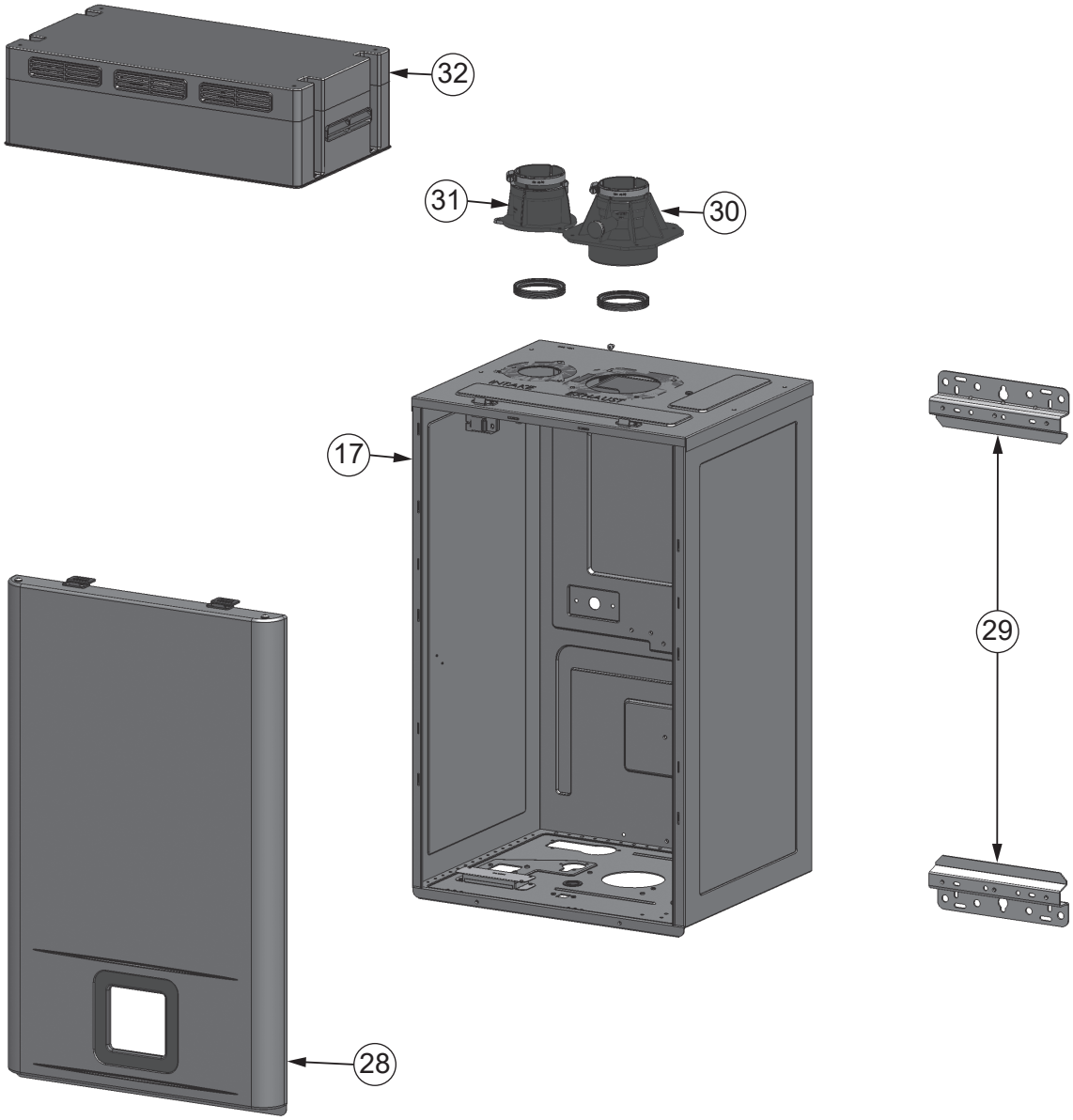
32
31
30
17
29
28

COMPONENT LIST

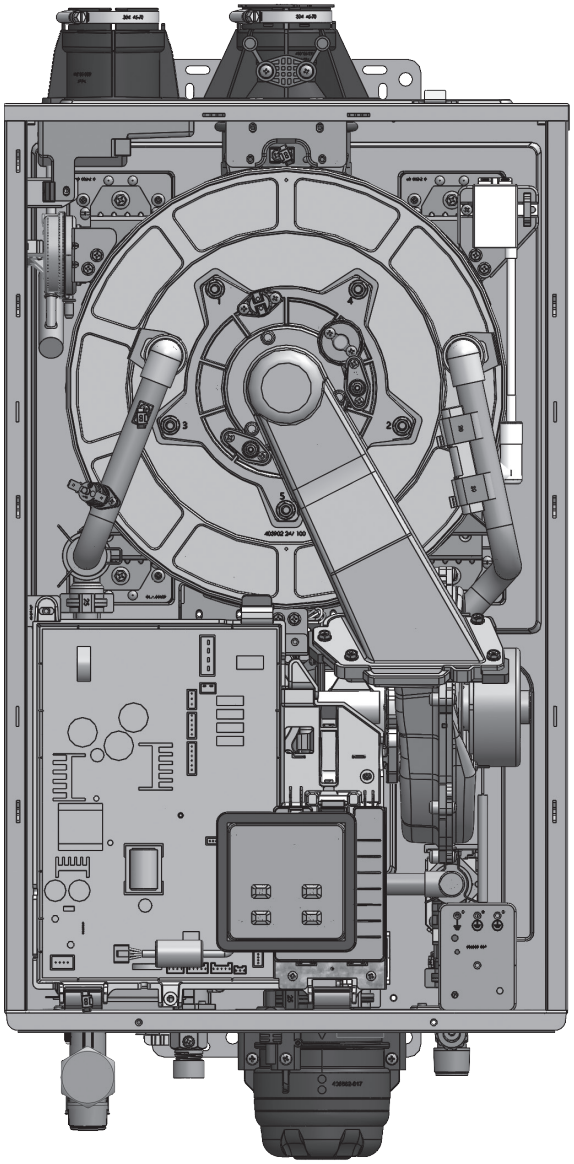

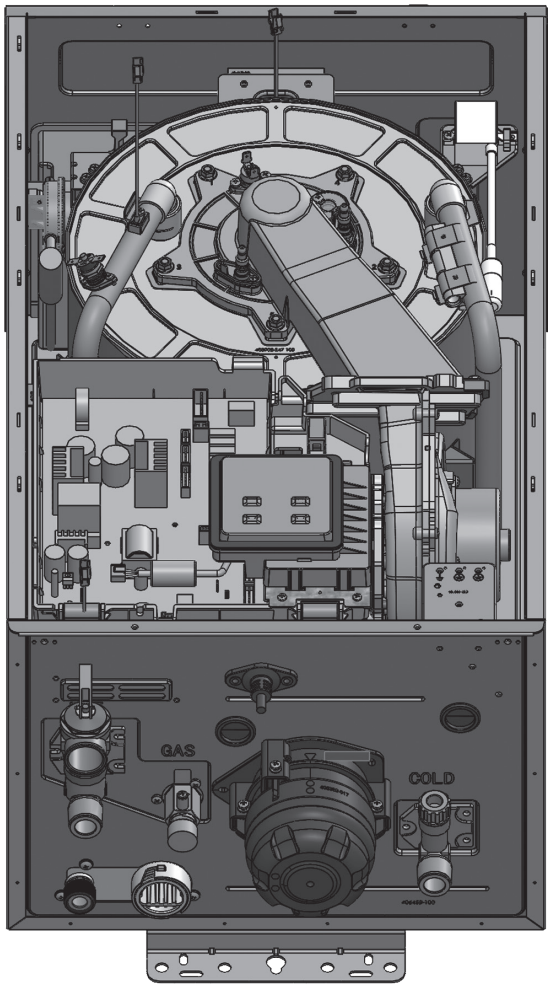

COMPONENT LIST

Replacement parts may be ordered through your local distributor or by calling our Technical Assistance Hotline which is listed on your warranty. When ordering parts, always give the following information:

1. Model and serial numbers. This info should be on the left side of the water heater
2. Part(s) description

Item No.	Component List
1	AIR PRESSURE SWITCH
2	CONDENSATE TRAP
3	BURNER DOOR HI-LIMIT
4	FLAME SENSOR
5	HEAT EXCHANGER THERMISTOR
6	HI-LIMIT SWITCH (MANUAL RESET)
7	GAS VALVE
8	USER INTERFACE
9	PRINTED CIRCUIT BOARD
10	INLET FILTER
11	X^3 CARTRIDGE (Not Shown)
12	BYPASS CARTRIDGE
13	OUTLET WATER TUBE
14	BYPASS WATER TUBE
15	HEAT EXCHANGER OUTLET WATER TUBE
16	INLET WATER TUBE
17	CASE (FRONT COVER NOT SHOWN FOR CLARITY)
18	EXHAUST THERMISTOR
19	IGNITER RODS
20	BURNER ASSEMBLY
21	FAN
22	IGNITER
23	FLOW SENSOR/FLOW CONTROL VALVE ASSEMBLY
24	BYPASS VALVE
25	INLET THERMISTOR
26	OUTLET THERMISTOR
27	VENTURI ASSEMBLY
28	CASE FRONT COVER
29	MOUNTING BRACKETS
30	EXHAUST PORT
31	INLET PORT
32	OUTDOOR VENT CAP
33	HEAT EXCHANGER ASSEMBLY

Flow Rate Capacity Chart

The chart is based on a properly sized gas line and installation at 0-2,000 ft. (0-610 m). The water heater will de-rate approximately 3% (NG) or 4.5% (LP) per 1,000 ft. (305 m) of elevation increase above 2,000 ft. (610 m).

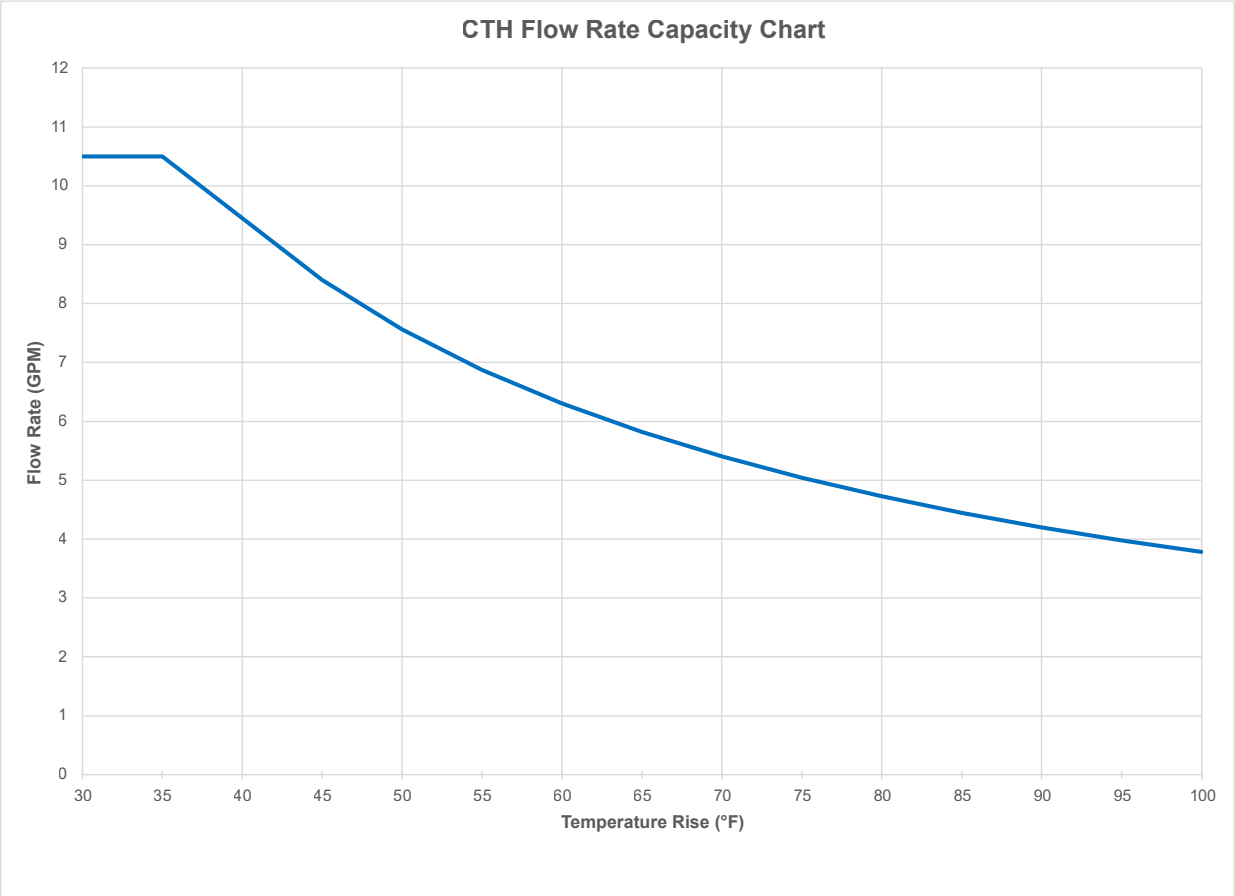

GPM vs Pressure Loss Chart

GPM vs Pressure Loss Chart

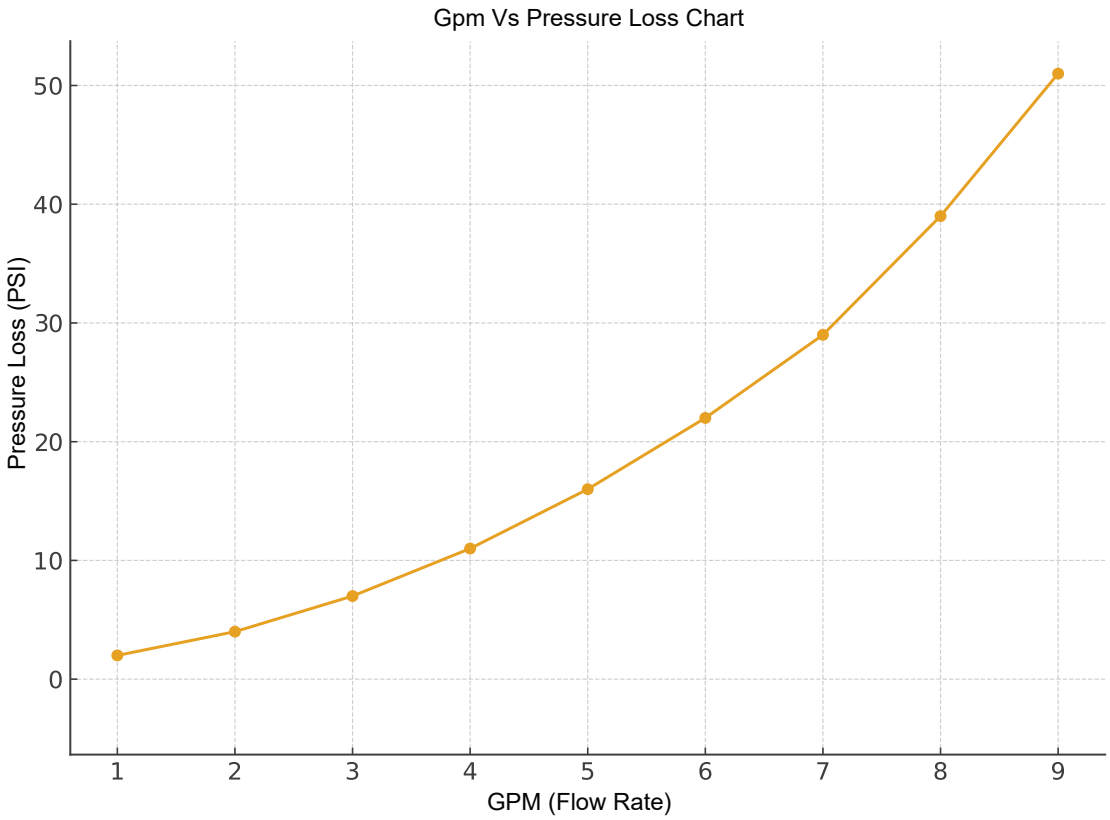

NOTES

NOTES

NOTES

NOTES

Copyright © 2026, A. O. Smith.

All Rights Reserved