DREO | Tower Fan
Nomad TF410

USER MANUAL

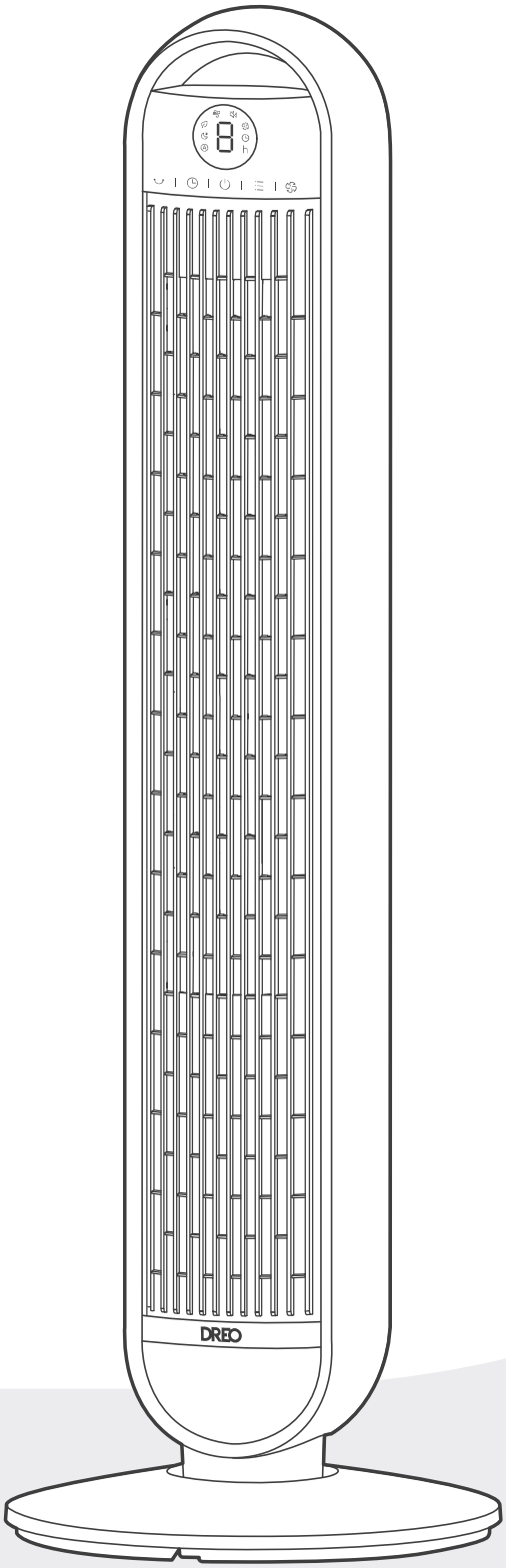

Thanks for Choosing DREO!

Your support means the world to us.
We hope you enjoy our product as much as we did creating it.

CONTENTS

01

IMPORTANT SAFETY INSTRUCTIONS

1-2

02

ASSEMBLING YOUR TOWER FAN

3-5

03

KNOWING YOUR TOWER FAN

6-7

04

USING YOUR TOWER FAN

8-10

05

CLEANING AND MAINTENANCE

11-13

06

TROUBLESHOOTING

14

07

DREO CUSTOMER CARE

15-16

IMPORTANT SAFETY INSTRUCTIONS 01

READ ALL CAUTIONARY MARKINGS ON THE APPLIANCE AND SAFETY INSTRUCTIONS IN THE USER MANUAL BEFORE USE.

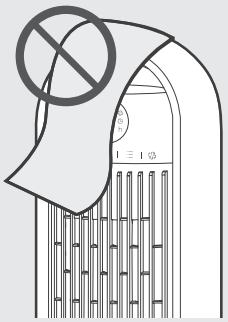

Do not cover the air inlet and outlet while in operation.



Do not use the fan near flammables and combustibles.

General Safety

1. Children shall not play with the appliance. Cleaning and maintenance shall not be performed by children without supervision.
2. Use the appliance as described in the user manual only. Any other use not recommended in the user manual may cause fire, electrical shock, or personal injury.
3. This appliance can be used by children aged above 8 years and persons with reduced physical, sensory or mental capabilities or lack of experience and knowledge if they have been given supervision or instruction concerning use of this appliance in a safe way and understand the hazards involved.

Operation Safety

1. Place the appliance on a flat, dry surface before use.
2. Do not immerse in water and any other liquids.
3. Do not use the appliance until the base is installed.
4. Do not insert your fingers, pencil, and any other objects into the grilles while in operation.
5. Do not dismantle, repair, or modify. All servicing should be performed by qualified personnel.

Electricity Safety

1. Make sure that the voltage of your electricity supply is the same as that indicated on the appliance.

2. Always unplug before cleaning or leaving the appliance unused for a long period of time. Keep your hands dry when plugging/unplugging.
3. Do not operate any fan with a damaged cord or plug. Discard fan or return to an authorized service facility for examination and/or repair.
4. Do not run cord under carpeting. Do not cover cord with throw rugs, runners, or similar coverings. Do not route cord under furniture or appliance.Arrange cord away from traffic area and where it will not be tripped over.
5. WARNING: To reduce the risk of fire or electric shock, do not use this Fan with any solid-state speed control device.
6. This appliance employs overload protection (fuse). A blown fuse indicates an overload or short-circuit situation. If the fuse blows, unplug the product from the outlet. Replace the fuse as per the user servicing instructions and check the appliance. If the replacement fuse blows, a short-circuit may be present and the appliance should be discarded or returned to an authorized service facility for examination and/or repair.
7. This appliance has a polarized plug (one blade is wider than the other). To reduce the risk of electric shock, this plug is intended to fit in a polarized outlet only one way, If the plug does not fit fully in the outlet, reverse the plug. If it still does not fit, contact a qualified electrician. Do not attempt to defeat this safety feature.
8. **WARNING:** To reduce the risk of fire, electric shock or injury to persons, do not use replacement parts that have not been recommended by the manufacturer (e.g. parts made at home using a 3D printer).

FOR HOUSEHOLD USE ONLY READ AND SAVE THESE INSTRUCTIONS

Gentle Reminder:



Check the appliance regularly and refer to TROUBLESHOOTING or contact our customer support if it shows any of the following signs:

- Power cord or plug is damaged.
- Loud noise, unusual smell or excessive heat.

Specifications

Model No.	DR-HTF020
Input	AC 120V ~ 60Hz
Rated Power	30W
Battery Type	AAA

ASSEMBLING YOUR TOWER FAN

02

Assembly Instructions

When using the appliance for the first time, remove the wraps and attach the parts by following the steps below.

1

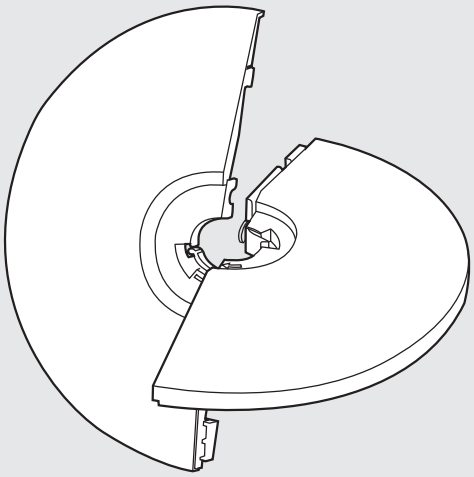

Intersect the two base halves diagonally.

2

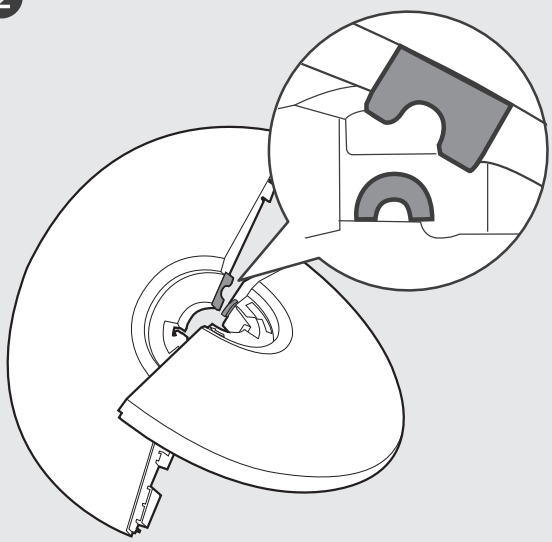

Match the arched cutout with the arched support on the base. Then, hook them together.

3

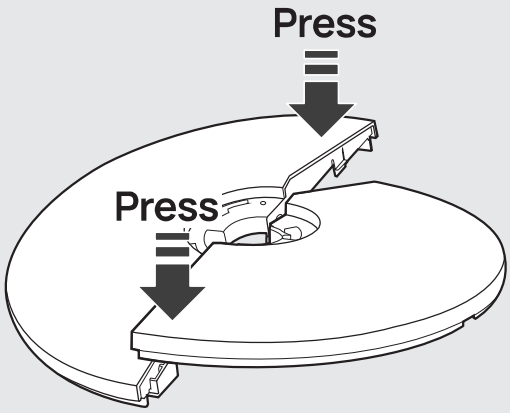

Press down on the edge until you hear a **click** to securely snap the two base halves together.

4

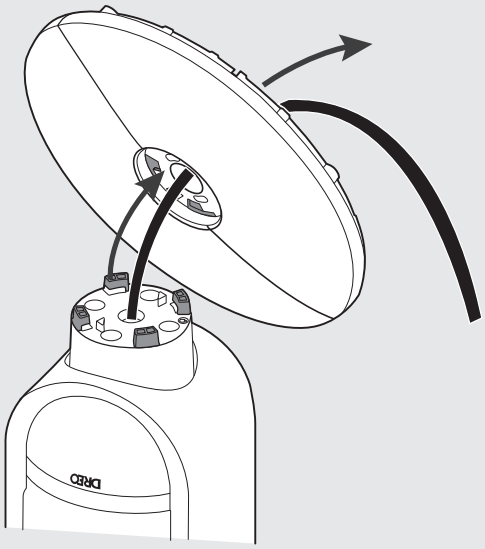

Thread the cord through the center hole and attach the base to the fan bottom.

5

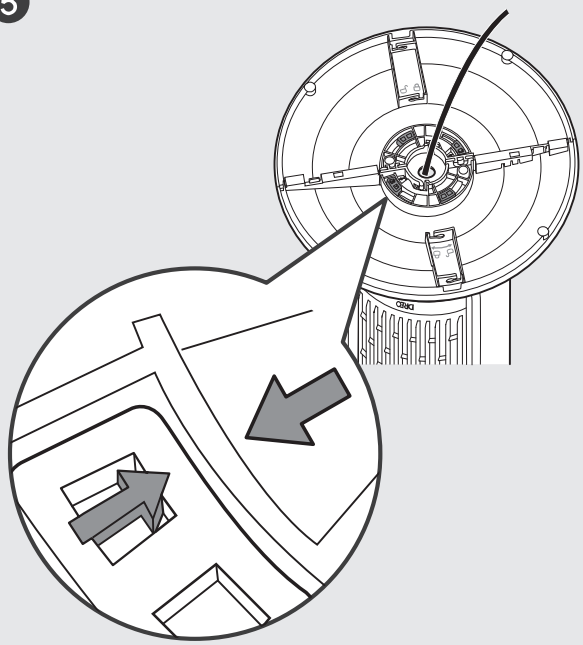

Make sure the arrows on both the base and fan bottom are aligned.

6

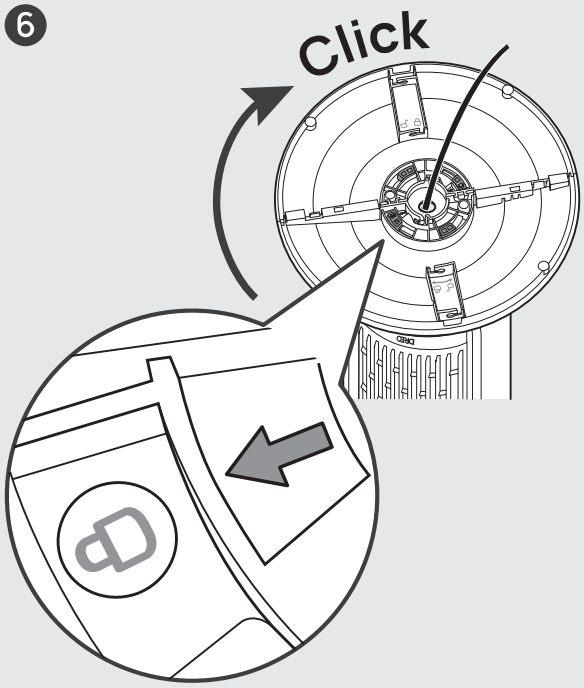

Turn the base clockwise until it **clicks** into place.

7

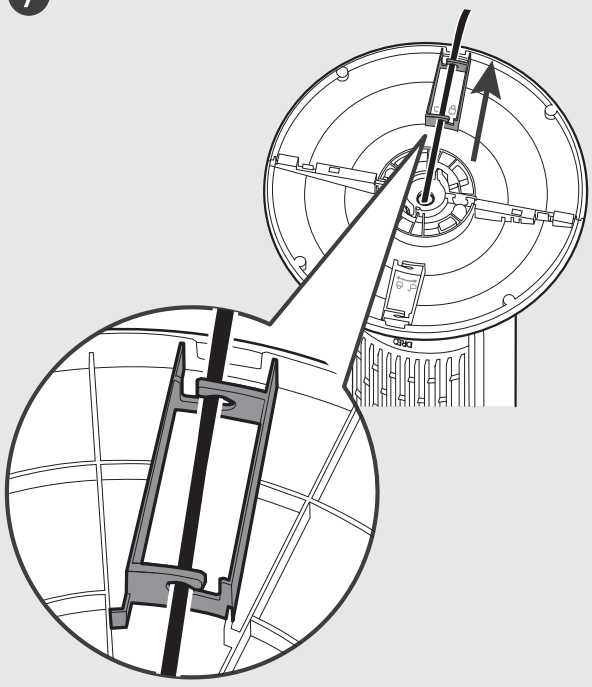

Thread the cord through all REAR cord keepers, then set the fan upright.

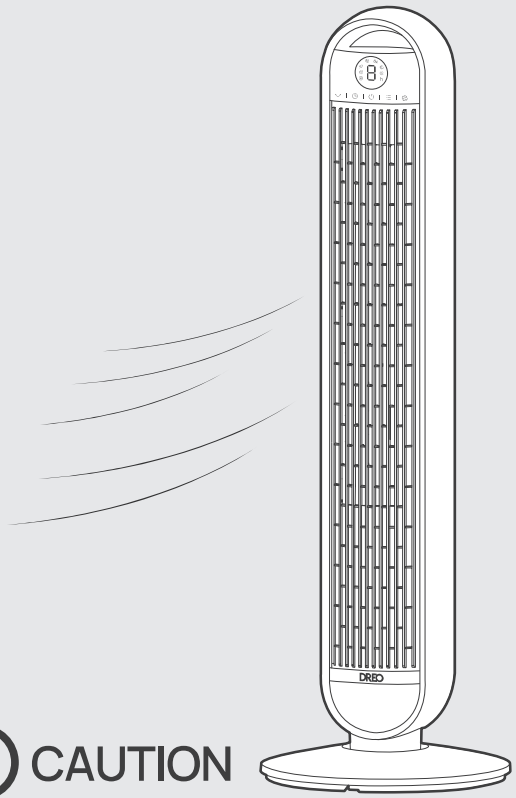

CAUTION

- Do not operate the tower fan if the base has not been installed.
- Make sure to thread the cord through all rear cord keepers.

Package Contents

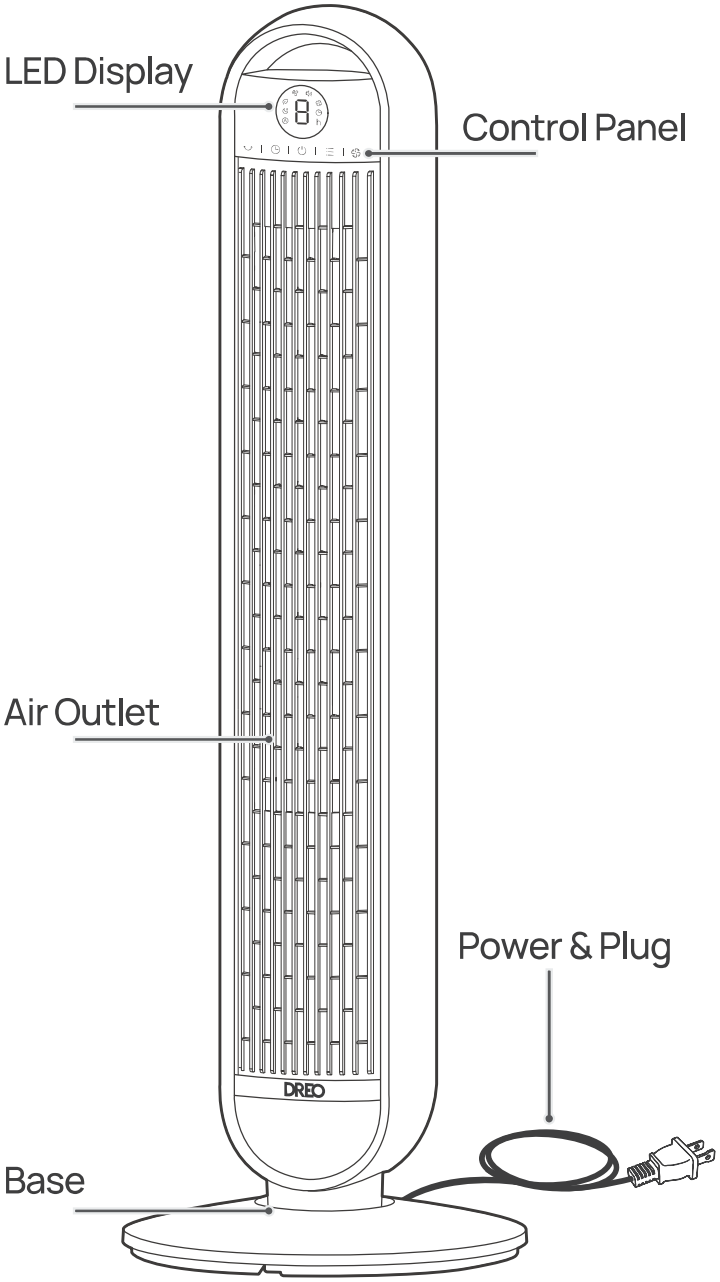

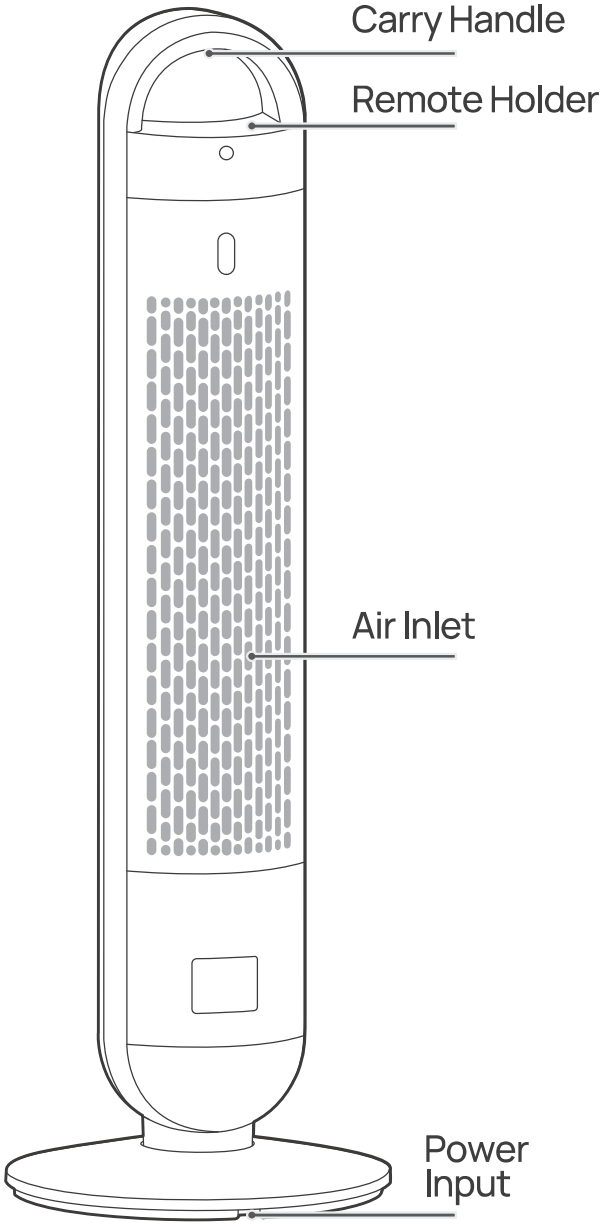

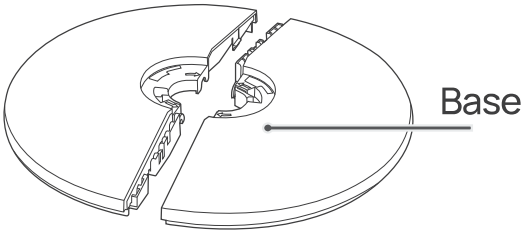

User Manual

Quick Start Guide



Remote Control
(Battery Included)

KNOWING YOUR TOWER FAN

03

Control Panel

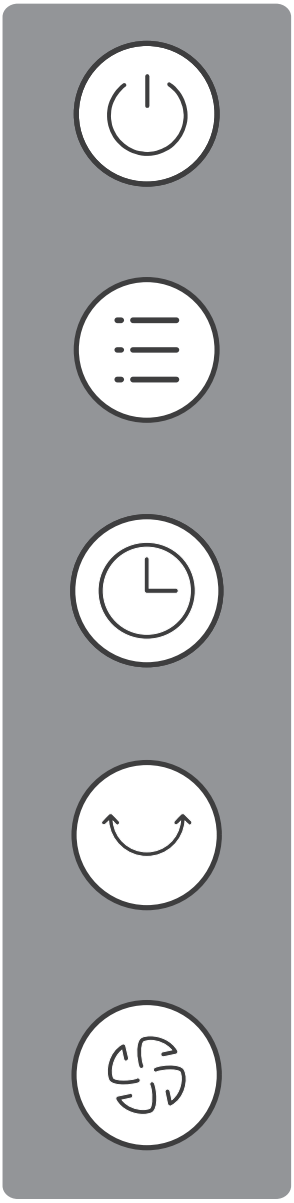

Power Button
- Turn power on/off

Mode Button
- Switch between Normal/Natural/Sleep/Auto Mode
- Long press to mute/unmute beep sounds.

Timer Button
Select to set a timer (0-8h)

Oscillation Button
- Adjust airflow direction

Fan Speed Button
- Adjust airflow volume (1-6 levels)

LED Display



Fan Speed/ Timer Hour

Normal Mode	Natural Mode	Sleep Mode	Auto Mode
Fan Speed	Mute	Hour Indicator	Timer

USING YOUR TOWER FAN

04

Working Modes

Normal Mode
Fan runs at the fixed speed.

Natural Mode
Fan speed goes up and down intermittently to replicate the natural breeze.

Auto Mode
Fan automatically increases speed when room temp is higher and decreases speed when temp is lower.

Sleep Mode
(Mute Auto On)

Balance comfort and noise by automatically decreasing fan speed as you fall sleep.

If the fan speed is 3 or higher, it will decrease two times, one speed every 30 minutes, then it will remain constant.

If the fan speed is 2, it will decrease one time after 30 minutes,then it will remain constant.

If the fan speed is 1, it will remain constant from the start.

Additional Features

Mute
Long press or press on the remote control to turn on/off the button sounds.

Timer
When the fan is ON/OFF, touch the timer button repeatedly to set a timer (1-8 h). When the timer ends, the fan will stop/start running automatically. To cancel, set the time to 0 hour.

Note: Display will return to fan speed after 3 seconds.

Memory

If the fan is turned OFF or disconnected from power, it will operate under the previous settings (except the timer setting) when it is turned ON again.

Display Auto Off

- Display turns off after 1 minute (after 5 seconds in sleep mode).
- Wake up the display with any button.

Getting the Most out of Your Tower Fan

1. Remove any tall obstacles that might block the airflow from the fan.

2. Combine with your AC unit to get cooler air throughout the room.

3. Position the tower fan closer to you to get more direct airflow.

4. Place a bucket of ice in front of the fan for an extra cooling boost.

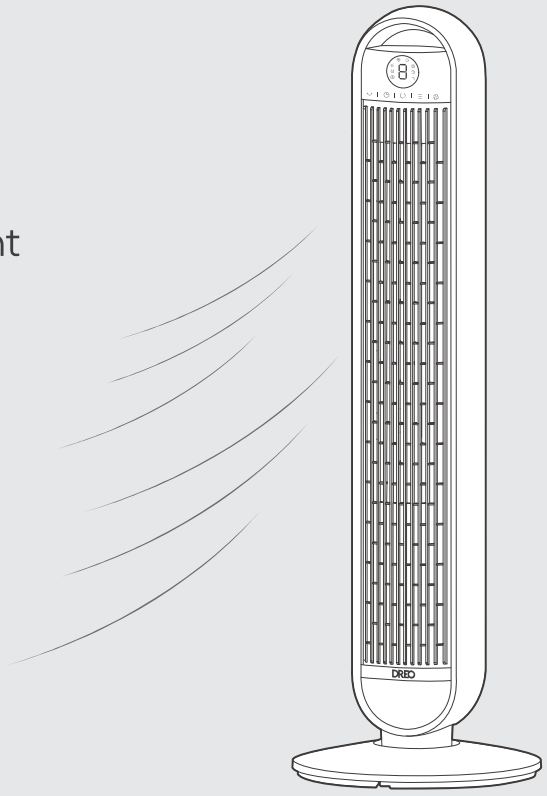

Remote Control

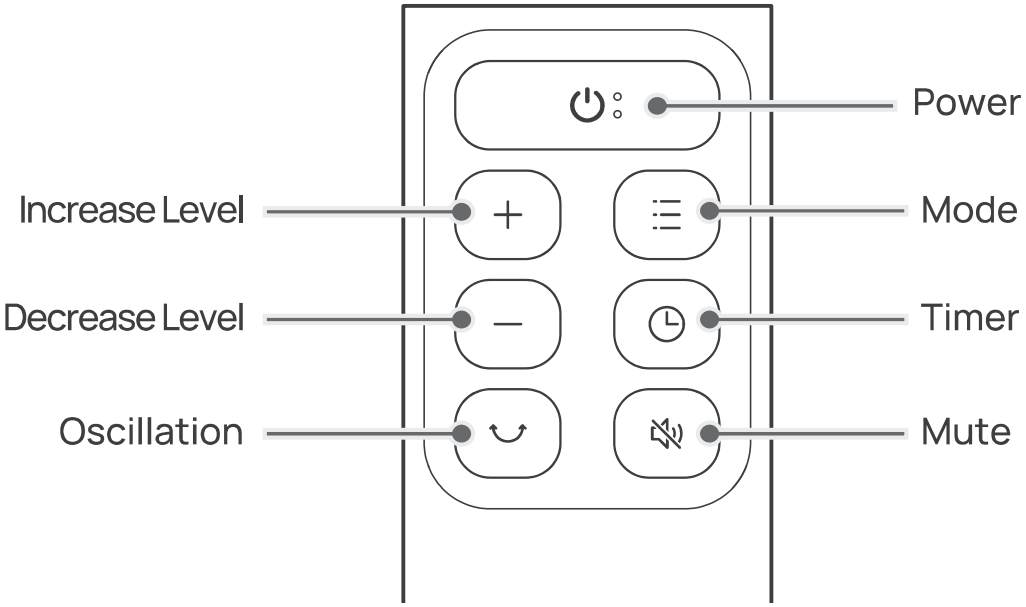

Battery Replacement

1. Remove the battery cover in the direction indicated by the arrow.
2. Replace with two new AAA 1.5V batteries. Make sure that the positive(+) and negative(-) terminals are positioned correctly.
3. Push the battery cover back into place.

WARNING

· Replace with new batteries of the same type when replacement is required.

· Remove the batteries when the remote control is unused for long period of time.

· Do not attempt to dismantle the batteries.

· Do not dispose the batteries in fire, batteries may explode or leak.

· Chemical burn hazard. Keep batteries away from children.

· Do not mix old and new batteries and Do not mix alkaline, standard (carbon-zinc) or rechargeable (ni-cad, ni-mh, etc.) batteries.

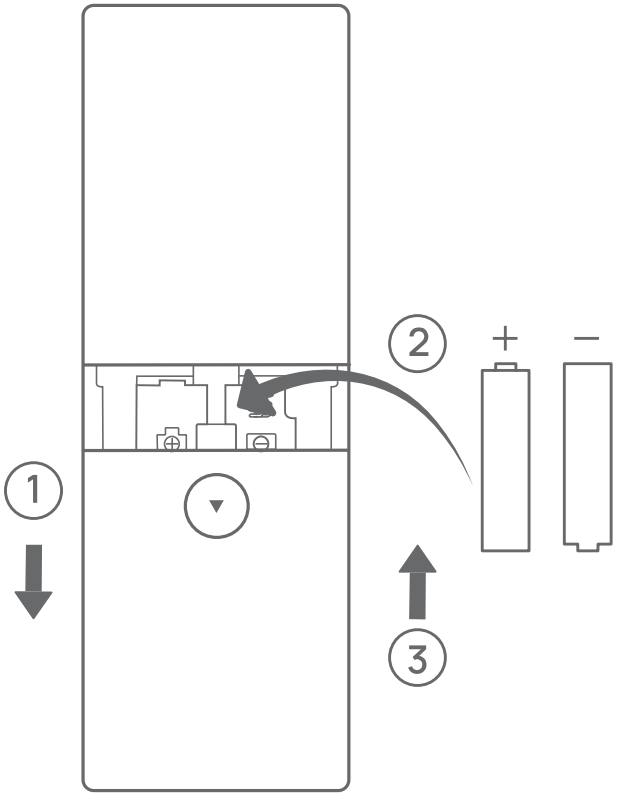

CLEANING AND MAINTENANCE

05

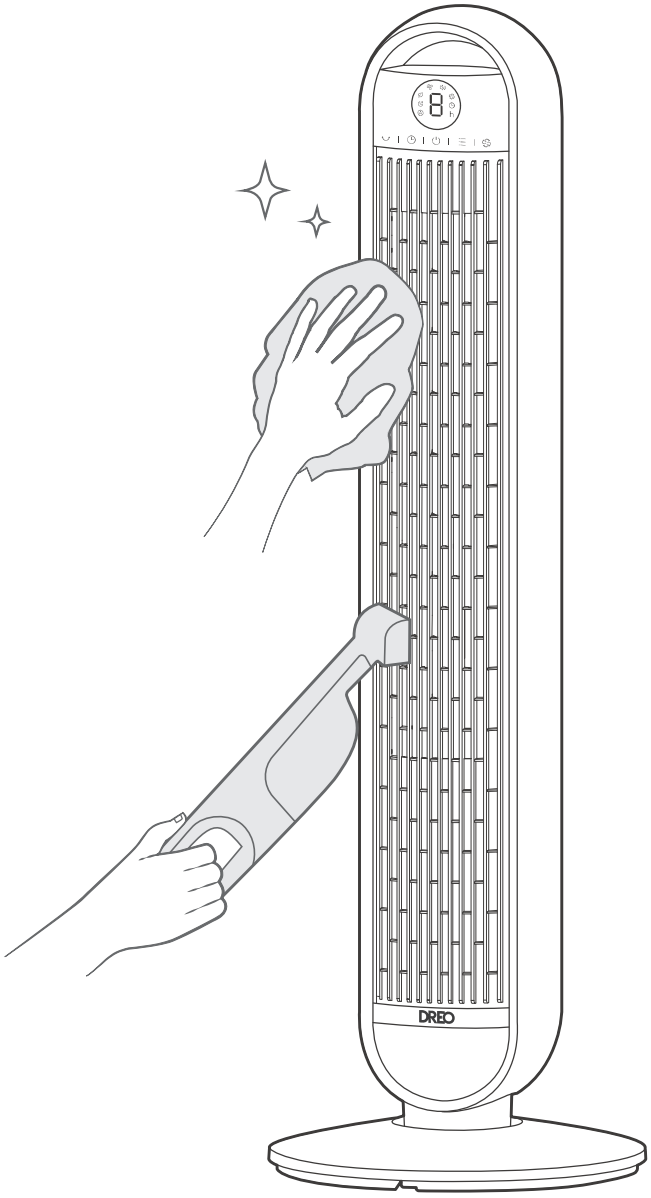

Outer Surface

Gently wipe off the dust with a soft, dry cloth.

Grilles & Blades

Remove the dust using a vacuum or air duster.

Base

The base can be disassembled in the reverse order of assembly.

CAUTION

1. Always unplug the fan before any cleaning or maintenance.
2. Do not immerse in water or get water inside the motor housing.
3. Do not use any chemical agents when cleaning the fan.
4. Store in a cool, dry place and cover it to protect from dust.

Rear Grille

WARNING
Turn off the appliance and unplug before any cleaning and maintenance.

1

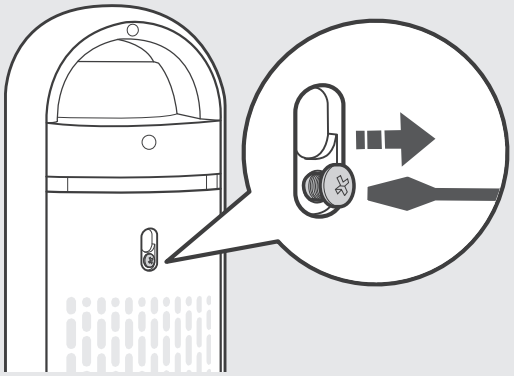

Remove the screw on the top of the rear grille with a Philips screwdriver.

2

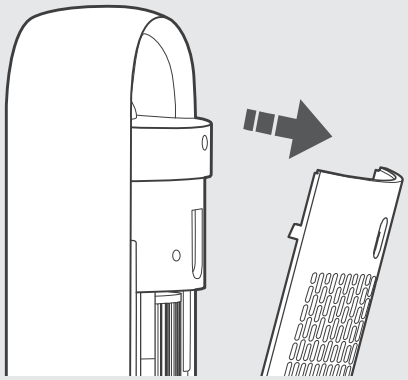

Lift up the grille and pull it out.

3

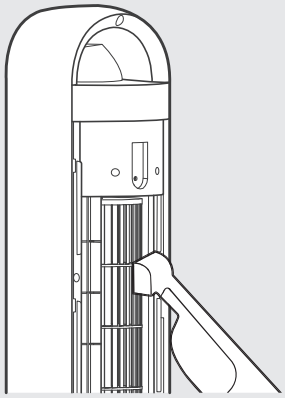

Clean the dust on blades using a vacuum cleaner or air duster. Rinse the rear grille under running water or with a clean, damp cloth.

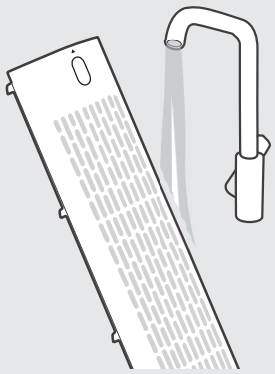

4

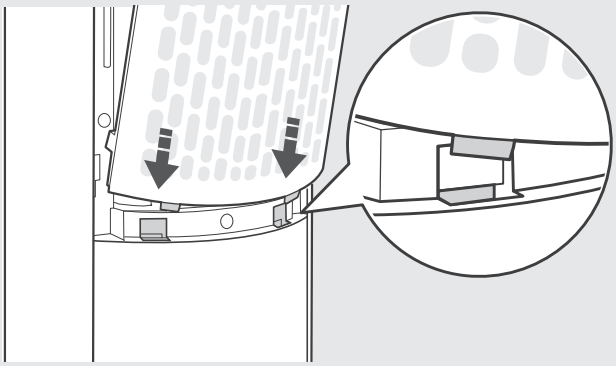

Dry up, then install the grille and the screw back in place, making sure the bottom pegs are fully inserted into the slots.

User Servicing Instructions (Fuse)

This appliance features a fused safety plug that protects against overload or short-circuit situations. If the fuse blows, please cut off power and follow the below instructions or consult a qualified electrician.

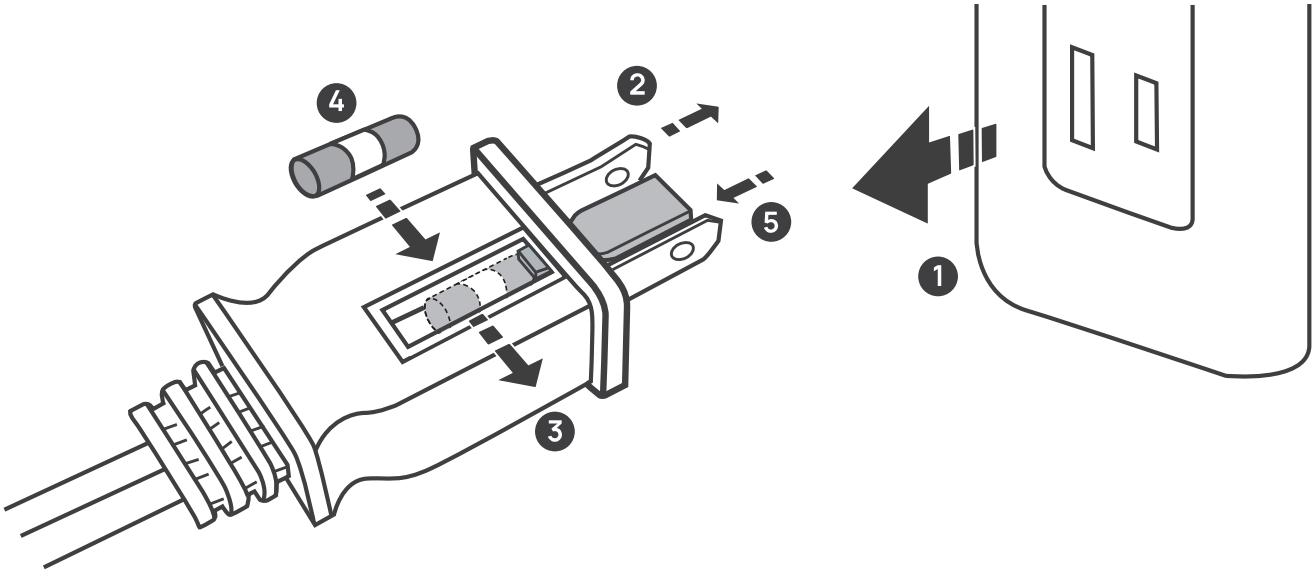

1. Grasp plug and remove from the receptacle or other outlet device. Do not unplug by pulling on cord.
2. Open fuse cover. Slide open fuse access cover on top of attachment plug towards blades.
3. Remove fuse carefully. Push the fuse from the other side to remove the fuse.
4. Risk of fire. Replace fuse only with 5 Amp.125 Volt fuse.
5. Close fuse cover. Slide closed the fuse access cover on top of attachment plug.
6. The fan shall not be modified by users, such as by adding supplemental filters to fans.

WARNING

Risk of fire. Do not replace attachment plug. Contains a safety device(fuse) that should not be removed. Discard product if the attachment plug is damaged.

TROUBLESHOOTING 06

My fan won't turn on!

Make sure that the cord is connected to a powered outlet and the mains voltage corresponds with the voltage indicated on the fan.

My fan is shaky and wobbling!

1. Place the fan on a flat, level surface.
2. Incorrect installation might also cause shakiness. Please refer to the assembly instructions in **page 3-4.** Note that the power cord must be run through all rear keepers.

My fan is making vibration and noise!

1. Place the fan on a flat, level surface.
2. Be sure not to insert anything into the air inlet and outlet.

If your problem is not listed or still persists, please contact our Customer Support (see page 16).

DREO CUSTOMER CARE

07

Default 12-Month Warranty

This appliance is covered by DREO warranty for 12 months from the date of its original purchase.

The warranty will not apply in cases of:

- Accident, misuse, or repairs performed by unauthorized personnel.
- Any unit that has been tampered with or used for commercial purposes.
- Normal wear and tear of wearable parts.
- Use of force, damage caused by external influences.
- Damage caused by non-observance of the User Manual, e.g. connection to an unsuitable mains supply or noncompliance with the instructions.
- Partially or completely dismantled appliances.
- Defects caused by or resulting from damages from shipping or from repairs, service, or alteration to the product or any of its parts that have been performed by a repair person not authorized by DREO.

We can only provide after-sales service for products that are sold by DREO or DREO authorized retailers and distributors. If you have purchased your unit from a different place, please contact your seller for return and warranty issues.

FCC Statement

This device complies with Part 15 of the FCC Rules. Operation is subject to the following two conditions: (1) this device may not cause harmful interference, and (2) this device must accept any interference received, including interference that may cause undesired operation.

Please note that changes or modifications of this product is not expressly approved by the party responsible for compliance could void the user's authority to operate the equipment.

NOTE: This equipment has been tested and found to comply with the limits for a Class B digital device, pursuant to Part 15 of the FCC Rules. These limits are designed to provide reasonable protection against harmful interference in a residential installation. This equipment generates, uses and can radiate radio frequency energy and, if not installed and used in accordance with the instructions, may cause harmful interference to radio communications. However, there is no guarantee that interference will not occur in a particular installation.

If this equipment does cause harmful interference to radio or television reception, which can be determined by turning the equipment off and on, the user is encouraged to try to correct the interference by one or more of the following measures:

-Reorient or relocate the receiving antenna.

-Increase the separation between the equipment and receiver.

-Connect the equipment into an outlet on a circuit different from that to which the receiver is connected.

-Consult the dealer or an experienced radio/TV technician for help.

Model No.: DR-HTF020
Rev_1.2_EN

We're Here to Help!

(888) 290-1688 (Mon - Fri, 9:00 am-5:00 pm PST/PDT)

support@dreo.com

www.dreo.com

Hesung Innovation Corp

377 Valley Rd, Unit #2686, Clifton, NJ 07013 U.S.A

MADE IN CHINA

Intertek
CONFORMS TO
UL STD.507