THOR KITCHEN

GORDON RAMSAY COLLECTION

USE + CARE MANUAL

32-inch 3-Burner Gas Grill with Rear Infrared Burner Built-In/Freestanding

RBG3201-G

RBG3201



REV.072025.RBG3201-G

USE AND CARE MANUAL

GR 32-inch 3-Burner Built-In Gas Grill with Rear Infrared Burner

RBG3201-G

GR 32-inch 3-Burner Freestanding Grill with Rear Infrared Burner

RBG3201

THOR KITCHEN

TABLE OF CONTENTS

SAFETY WARNINGS ……04

Before you start……08

SPECIFICATIONS&INSTALLATION……10

UNPACKING&ASSEMBLY ……15

GAS CONNECTION ……16

Natural Gas……17

LP Gas……17

Gas Conversion Kits ……19

ELECTRICAL CONNECTIONS ……21

FINAL CHECKS……22

Leak Testing……22

CHECKLIST BEFORE EACH USE (FOR SAFETY)……24

IMPORTANT SAFETY PRECAUTIOUS……25

GRILLING IN WINDY CONDITION……26

USING YOUR GRILL……27

Pre-Grill Checklist……28

Lighting your Grill……29

Basic Grilling……30

Using the Rotisserie Burner……31

CLEANING YOUR GRILL……35

TROUBLE SHOOTING YOUR GRILL……38

POTENTIAL PROBLEMS.……39

WARRANTY……44

SAFETY WARNINGS

WARNING

READ THIS MANUAL CAREFULLY and completely before using your grill to reduce the risk of:

1. Fire

2. Burn hazard, personal injury or property damage

3. Ruined steaks or other unpleasant cooking experiences

4. Unapproved installation or servicing.

THIS PRODUCT IS DESIGNED FOR OUTDOOR USE ONLY. Improper installation, adjustment, alteration, service or maintenance can cause property damage, injury or death.

Read this manual thoroughly before installation, use, or servicing of this product.

DANGER

IF YOU SMELL GAS:

1. Shut off all gas supply lines to the grill.

2. Extinguish any open fl ames.

3. Carefully open the lid. Remember, it may be extremely hot!

4. If odor continues, keep everyone away from the grill and immediately call your gas supplier or your fire department.

WARNING

1.DO NOT store or use gasoline or other flammable vapors and liquids in the vicinity of this or any other appliance.

2. An LP cylinder not connected for use shall not be stored in the vicinity of this or any other appliance.

DANGER

S'IL Y A UNE ODEUR DE GAZ:

1. Coupex l'admision de gaz de l'appariel.

2. Éteindre toute fl amme nue.

3. Ouvir le couvercle!

4. Si l'odeur persiste, éloignez-vous de l'appareil et appelez immédiatement le fournisseur de gaz ou le service d'incendie.

AVERTISSMENT

1.NE PAS entreposer ni ut ilioser de i'essence ni d'autres vapeurs ou liquides inflamma-bles dans le voisinage del'appare il,ni de tout autre appareil.

2. cordée en vue de son utilisation, ne doit pas être entreposée dans le voisinage de cet appareil ou de tout autre appareil.

SAFETY WARNINGS

WARNING

1. Always maintain the required clearances from combustible construction as detailed. The grill is designed for outdoor use only. Never use in a garage, building, shed, breezeway or other enclosed area. This grill shall not be used under any unprotected overhead combustible construction.

2. Gas grills are not design certifi ed for and are not to be installed in or on recreational vehicles, portable trailers, boats or any other moving installation.

3. Keep any electrical supply cord and the fuel supply hose away from any heated surfaces. Electrical cords should be placed away from walkways to avoid creating a tripping hazard.

4. Do not repair or replace any part of the grill unless specifi cally recommended in this manual. Other service should be performed by a qualifi ed technician.

5. All gas lines must have a shut-off that is readily and easily accessible. Be sure the owner knows where the shut-off is located. If you smell gas, check for gas leaks immediately. Check only with a soap and water solution. Never check for gas leaks with an open flame.

6. Never locate the grill under a roof or overhang, in a building, garage, shed or other such enclosed area.

7. Never locate the grill under unprotected combustible construction.

WARNING

1. The outdoor cooking gas appliance and its individual shutoff valve must be disconnected from the gas supply piping system during any pressure testing of that system at test pressures in excess of 0.39 psi (2.74kPa)/NG 0.145 psi (0.99 kPa).

2. The outdoor cooking gas appliance must be isolated from the gas supply piping system by closing its individual manual shutoff valve during any pressure testing of the gas supply piping system at test pressures equal to or less than LP 0.39 psi (2.74 kPa)/NG 0.145 psi (0.99 kPa)

STATE OF MASSACHUSETTS

1. Massachusetts requires all gas be installed using a plumber or gas fi tter carrying the appropriate Massachusetts license.

2. All permanently-installed natural gas or propane installations require a “T” handle type manual gas valve be installed in the gas supply line to this appliance.

3. This does not apply to portable propane installations using a 20 pound cylinder.

CALIFORNIA PROPOSITION 65 - WARNING: This product can expose you to Carbon Monoxide, which is on the list of substances known by the state of California to cause cancer, birth defects or reproductive harm. For more information go to: www.p65warnings.ca.gov. California law requires businesses to warn customers of potential exposure to such substances. To minimize exposure to these substances, always operate this unit according to the Use and Care Manual, ensuring you provide good ventilation when cooking with gas.

SAFETY WARNINGS

- Never use dented, rusty or damaged propane cylinders. Never store additional or empty propane cylinders in the grill cabinet or in the vicinity of this or any other appliance. Do not store propane cylinders indoors on their sides.
- Children should never be left alone or unattended in an area where a grill is located. Place your grill well away from areas where children play. Do not store items that may interest children in or around the grill, in the cart, or in the masonry enclosure.
- Never move the grill when hot. When in use, portions of the grill are hot enough to cause severe burns.
- Always maintain the required clearances from combustibles as detailed. The grill is designed for outdoor use only. Never use in a garage, building, shed, breezeway, or other enclosed area. Do not use this grill under any unprotected overhead combustible construction.
- Gas grills are not designed or certified for and are not to be installed in or on recreational vehicles, portable trailers, boats or any other moving installation.
- Always have an ABC Fire Extinguisher accessible — never attempt to extinguish a grease fire with water or other liquids.
- Storing your grill: Store your grill in a well-ventilated area. If stored indoors, detach and leave L.P. cylinder outdoors in a well-ventilated area away from heat and away from where children may tamper with it.
- Keep any electrical supply cord and the fuel supply hose away from any heated surfaces. Electrical cords should be placed away from walkways to avoid tripping hazard.
- Do not repair or replace any part of the grill unless specifically recommended in this manual. Other service should be performed by a qualified technician.
- If the grill is installed by a professional installer or technician, be sure that he/she shows you where your gas supply shut-off is located. All gas lines must have a shut-off that is readily and easily accessible. If you smell gas, check for gas leaks immediately. Check only with a soap and water solution. (See INDEX: “Leak Testing” for further details.) Never check for gas leaks with an open flame.
- Never remove the grounding prong from the plug or use this product with an ungrounded, 2-prong adapter
- Inspect the L.P. gas supply hose prior to each use of the grill. If there is evidence of excessive abrasion or wear, or the hose is cut, it must be replaced before using the grill.

SAFETY WARNINGS

- Installation must conform with local codes or, in the absence of local codes, with either the National Fuel Gas Code, ANSI Z223.1/NFPA 54, Natural Gas and propane Installation Code, CSA B149.1, or Propane Storage and Handling Code, B149.2, in Canada.
- For safety reasons, avoid grilling fatty cuts of meat. Excessive fat can lead to dangerous flare-ups and potential fire hazards. Always ensure that meats are trimmed of excess fat before grilling.

THIS MANUAL MUST REMAIN WITH THE PRODUCT OWNER FOR FUTURE REFERENCE.

This product complies with CSA/ANSI Z21.58-22.



To obtain replacement parts or service contact:

Thor Kitchen

4651 E. Airport Drive, ontario.California 91761

Service:(877) 288 -8099

BEFORE YOU START

WARNING

Installation into a combustible enclosure requires an insulated jacket accessory. DO NOT REMOVE BRACKET OR INSTALL UNIT without use of the insulated jacket. Doing so may result in a fire, injury or property damage. Bracket must be removed to complete install with insulated jacket.

Insulated jackets may be ordered at www.thorkitchen.com/product-category/parts or phone (877) 288 - 8099. Please have grill model and serial available when ordering.

IF SHIPMENT ARRIVES DAMAGED

VISIBLE LOSS OR DAMAGE

Be certain any visible damage to the carton is noted on freight bill or express receipt and signed by the person making delivery.

FILE CLAIM FOR DAMAGES IMMEDIATELY, regardless of extent of damage.

INDEX: “Obtaining Service” for further details.)

CONCEALED LOSS OR DAMAGE

If damage is unnoticed until the grill is unpacked, notify the transportation company or carrier immediately and file a“concealed damage” claim with them. This should be done within (15) days of the date delivery is made to you. Be sure to hold on to the container for inspection. We cannot assume responsibility for damage or loss incurred in transit.

IMPORTANT NOTES

WHERE’S THE WIND?

When selecting a suitable location, consider important factors such as exposure to the wind and foot-traffic patterns.If you have a freestanding grill, position it so the prevailing wind blows into the front control panel (at your back when grilling), supporting the proper front-to-rear airflow. Built-in grills located in areas with prevailing winds should be protected by a wind barrier. Winds hitting the back of the grill directly may cause problems, as well as wind blowing along the hood gap.

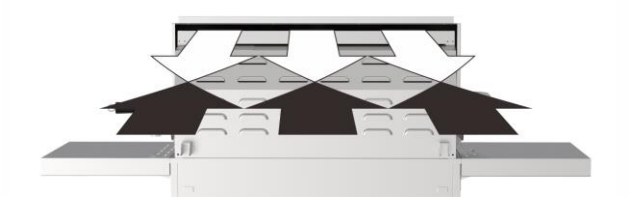

Be sure wind doesn’t blow into the hood gap.

HOW LONG IS YOUR RUN?

Keep all gas supply lines as short as possible because gas lines lose pressure over distance and with each elbow and tee that is added. This drop in pressure affects grill performance. (See INDEX: "Gas supply Line Runs" for further details.)

ARE YOU “ON-THE-LEVEL”?

Proper leveling during installation is critical. A grill that is out of level will cause erratic burner combustion and inefficient, uneven heating. A carpenter’s spirit level should be used to level the grill both front-to-back and side-to-side.

If the floor is uneven or has a decided slope, re-leveling may be required each time you move a freestanding unit.

BEFORE YOU START

BUILT-IN INSTALLATIONS

This built-in grill is designed for easy installation into masonry enclosures.

NOTE: Built-in grills are intended either for installation in a built-in enclosure constructed of non-combustible materials or for an installation in a built in enclosure constructed of combustible material when installed with a insulating jacket).

For non-combustible applications, the grill drops into the opening shown in the cutout detail drawing (See INDEX: “Gas Requirements”) and hangs from its counter-top trim. A deck is not required to support it from the bottom.

When using the insulated jacket in a combustible enclosure, the jacket must be supported from the bottom by a ledge on each side or a full deck beneath the jacket.

The enclosure should have ventilation holes to prevent gas build-up in the event of a leak. The deck ledges and counter should be flat and level. (refer to ANSI Z21.58 Standard for Outdoor Cooking Gas Appliances, Section 1.7 Enclosures For Self Contained LP-Gas Supply Systems)

This grill requires that a 120 volt, 60 hertz, 15 amp GFI certified outlet be installed by a qualified electrician.

CLEARANCE TO COMBUSTIBLE MATERIALS

Minimum clearance from the sides and back of the grill to adjacent combustible construction below the counter top surface is 12” from the sides and 6 1/4” from the back of the hood.

Dégagement minimal entre les parios latérales et l’arrière de l’appariel et la constructiohn combustible au-dessous de panneau supérieur de l’appariel (30 cm à partir des parois latérales et 15.9 cm à partir de l’arrière de la hotte).

Do not use this appliance under unprotected overhead combustible surfaces.

N’utilisez pas cet appareil sous des surfaces inflammables non protégées

A minimum of 6" of clearance is needed on the left side of the grill above the counter top for the motor and skewer.

If the grill is to be placed into a combustible enclosure, an approved insulated jacket is necessary and is available only from your Thor dealer. Insulated jackets have been designed and tested specifically for your grill.

REAR HOOD CLEARANCE

A 3 inch clearance is required behind the grill to allow the front hood to open.

The grill exhausts combustion products and cooking greases to the back.

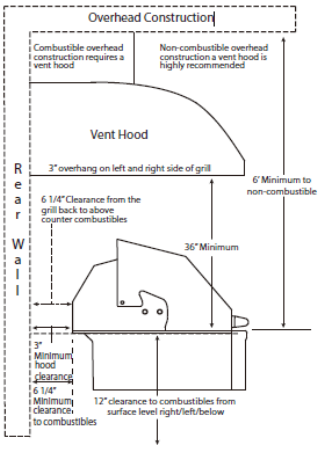

OVERHEAD PROTECTION AND EXHAUST REMOVAL

If installed under any combustible construction the cooking area over the grill must be covered with an exhaust hood.The hood must provide 3 - 6” of overhange on all exposed sides. The exhaust hood shall provide no less than 1,200 CFM for proper exhaust ventilation. The hood must be approved for outdoor installation and provided with a dedicated GFCI protected branch circuit.

SPECIFICATIONS & INSTALLATION

FEATURE

1. Hood	2.Grill light
3. Rotisserie backburner	4. Rotisserie kit
5. Warming rack	6. Cooking grate
7. Bezel	8.Knob
9. Drip pan	10.Motor
11. Rotisserie kit hook	12. Light switch
13. Panel light switch	

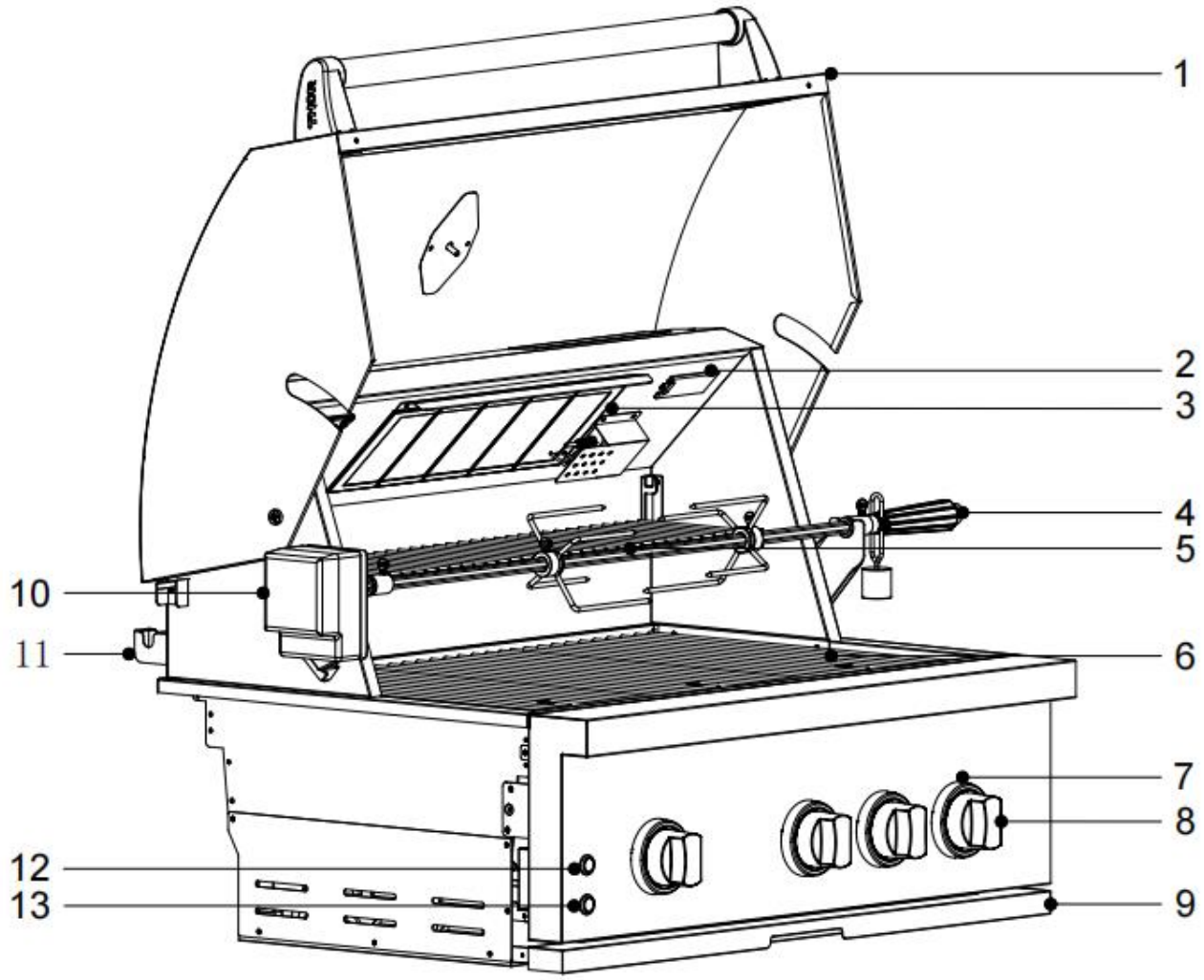

SPECIFICATIONS & INSTALLATION

The guides, measurements and dimensions detailed below are designated to assist you with planning your outdoor kitchen. NOTE: Due to continuing product innovation, specifications are subject to change without notice.

WITHOUT INSULATED JACKET INSTALLED

MODEL	Width/inch	Height/inch	Depth/inch
RBG3201-G	30 11/16	10 7/8	21 1/8

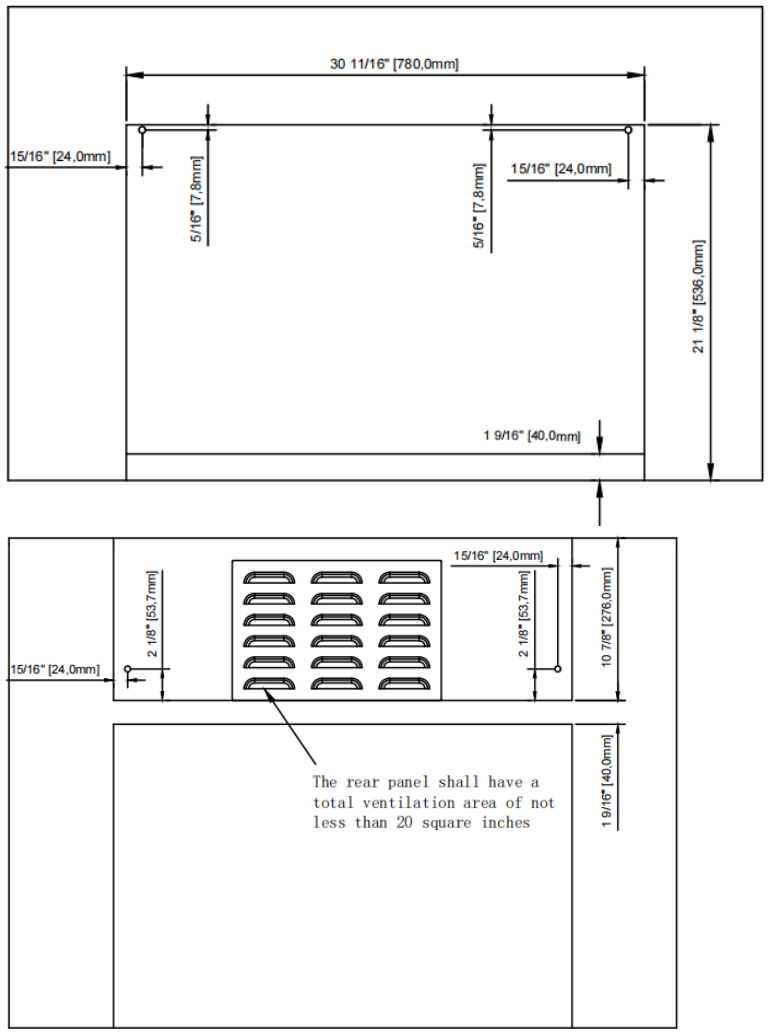

1. At least two ventilation openings shall be provided in the side walls of the enclosure, equally sized, placed on two adjacent sides, and unobstructed. The opening(s) shall have a total free area of not less than 20 square inches for each 20lb cylinder tank stored.

2.Ventilation opening(s) shall be provided at floor level of the enclosure and shall have a total free area of not less than 20 square inches for each 20lb cylinder tank. If ventilation openings at floor level are in a side wall, there shall be at least two openings. The bottom of the openings shall be 1 in (25.4 mm) or less from the floor level and the upper edge no more than 5 in (127 mm) above the floor level. The openings shall be equally sized, placed on two adjacent sides and unobstructed.

3. Every opening shall have minimum dimensions so as to permit the entrance of a 1/8 in (3.2 mm) diameter rod.

SPECIFICATIONS & INSTALLATION

Installation into a combustible enclosure requires an insulated jacket accessory. Not installing an insulated jacket could result in a fire, injury or property damage. Insulated jackets may be ordered at www.thorkitchen.com/product-category/parts or phone (877) 288 -8099. Please have grill model and serial available when ordering.

WITH INSULATED JACKET INSTALLED （MODEL: IJBG3226）

MODEL	Width/inch	Height/inch	Depth/inch
IJBG3226	33 7/8	11 5/8	22 1/4

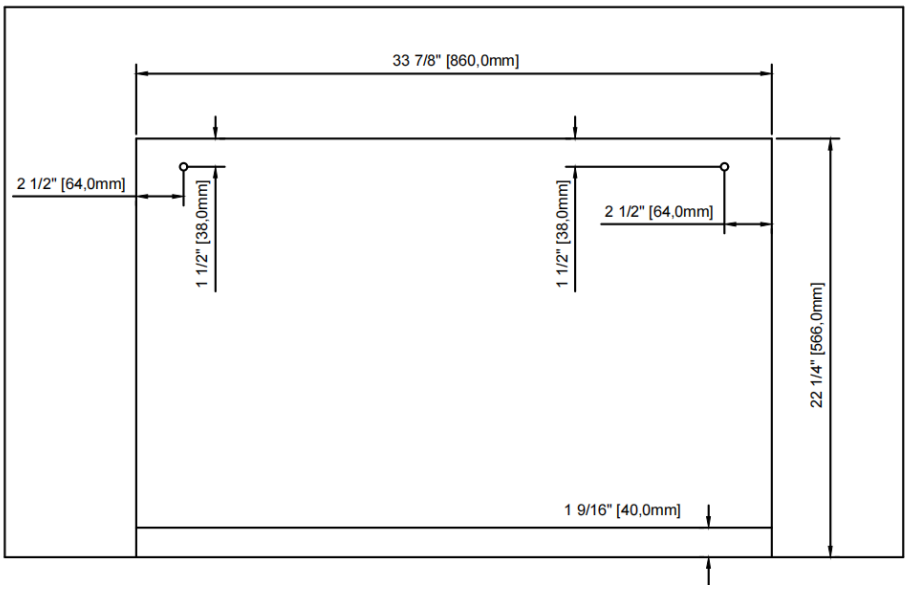

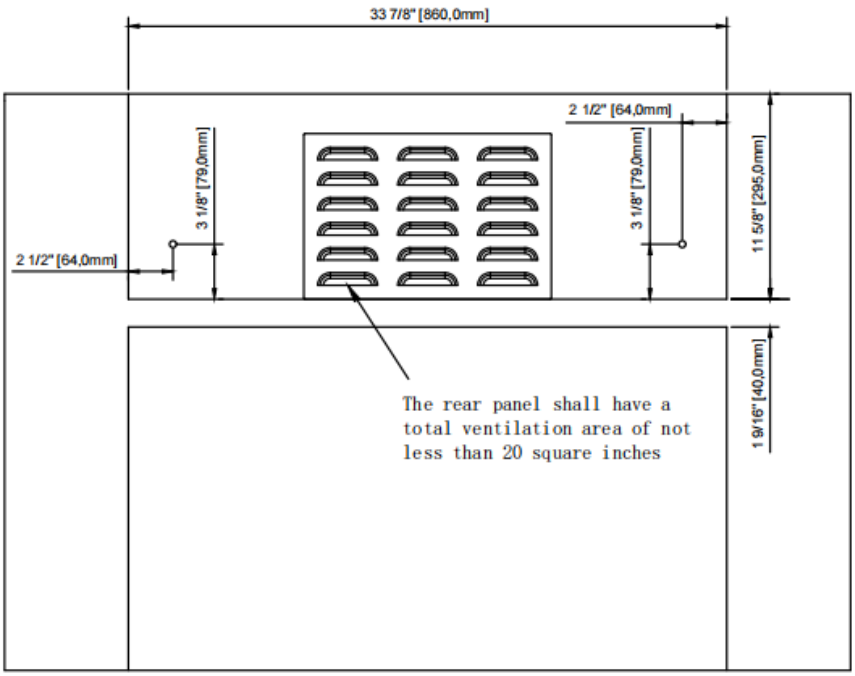

SPECIFICATIONS & INSTALLATION

MODEL-SPECIFIC BTU OUTPUTS

MODEL-SPECIFIC BTU OUTPUTS						
MODEL	Main burner(BTU)	Main Infrared Burner(BTU)	Rear Infrared Burner(BTU)	Total BTU	Rotisserie Motor	Hood Light
RBG3201-G	2@18,000	15,000	15,000	66,000	Yes	Yes

RBG3201-G

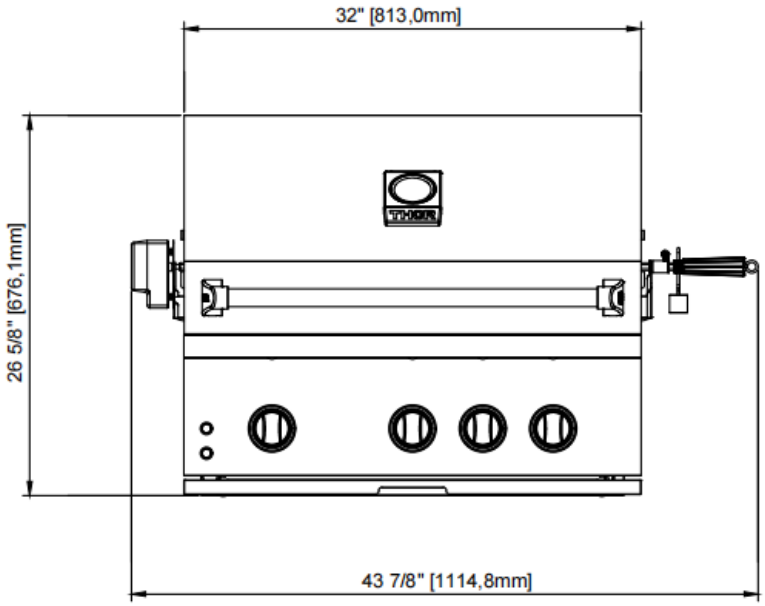

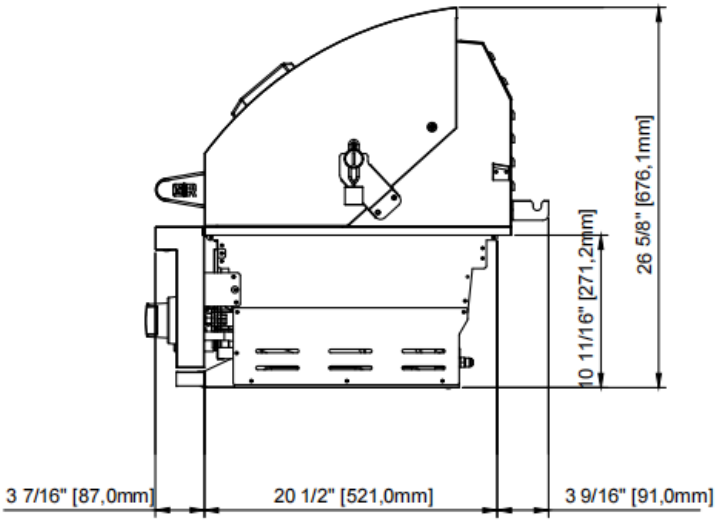

TG32CT (Installation Cart Model)

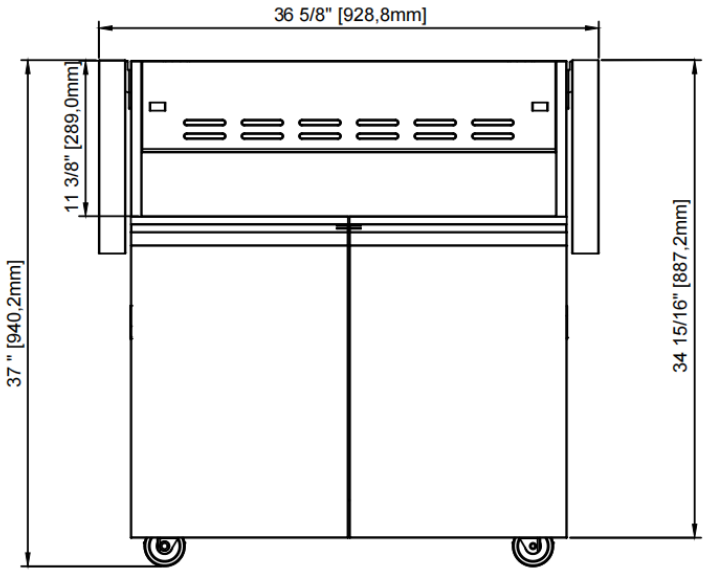

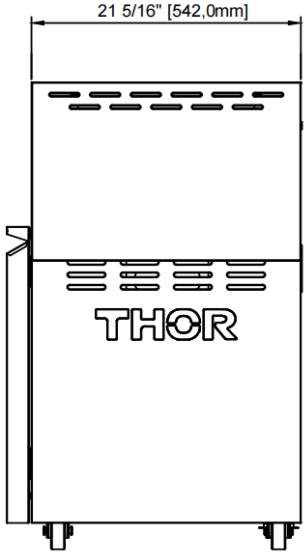

SPECIFICATIONS & INSTALLATION

RBG3201-G +TG32CT

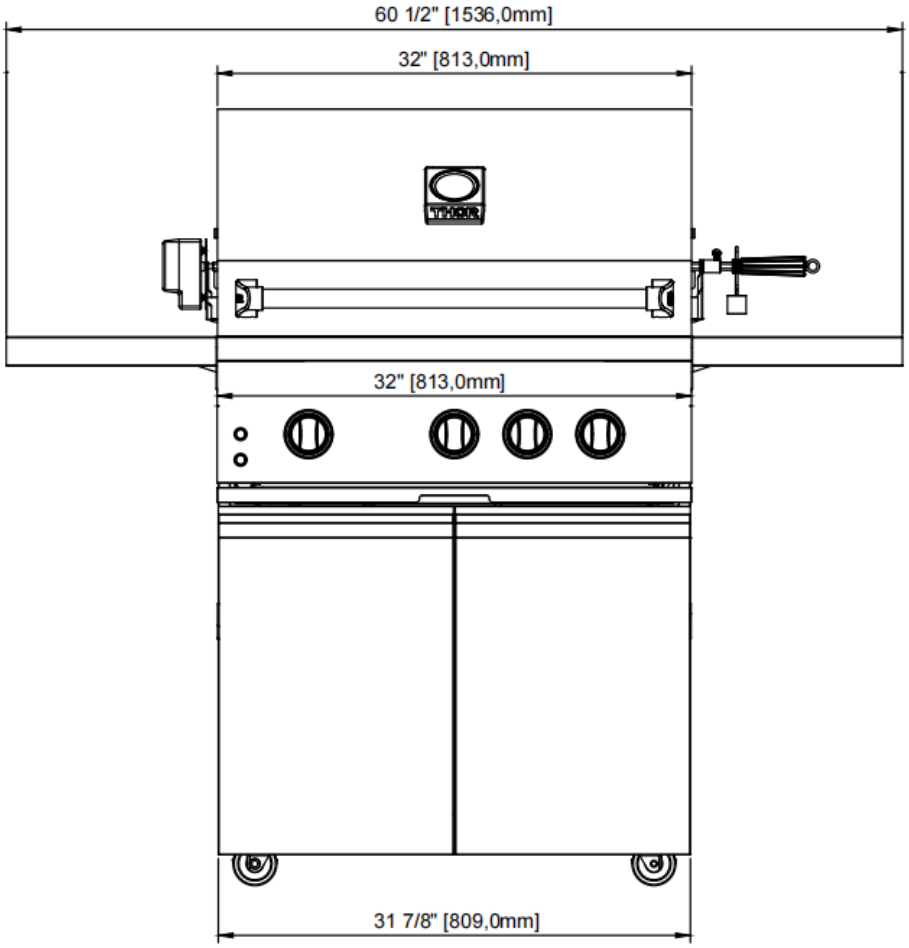

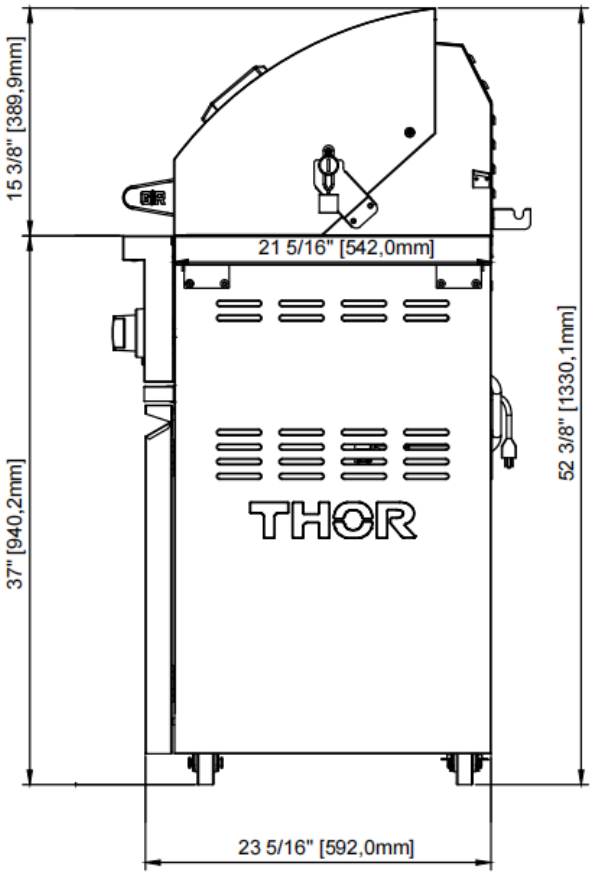

UNPACKING & ASSEMBLY

The grill arrives nearly ready to use and requires only minor assembly.

By carefully following the uncrating and unpacking steps, you will improve your first experience with the grill.

Shipping weight on smaller units is app. 300 pounds and larger units may weigh over 500 pounds.

⚠ WARNING:EXCESSIVE WEIGHT HAZARD!

Use two or more people to move or install this unit.

Failure to follow this instruction can result in back or other personal injuries.

INTERIOR PACKING

Thor uses sturdy tie-down cables and straps to ensure your grill arrives at your home in the same condition that it left our factory. BE SURE YOU HAVE REMOVED ALL PACKING DOWNS BEFORE USING YOUR GRILL.

- Remove the white accessory box and wood packing, the grill racks, and remove any loose items from the firebox.
- Ensure that all burners are properly seated on the burner valve orifice and sitting level with the legs in the frame slots and no side-to-side movement.

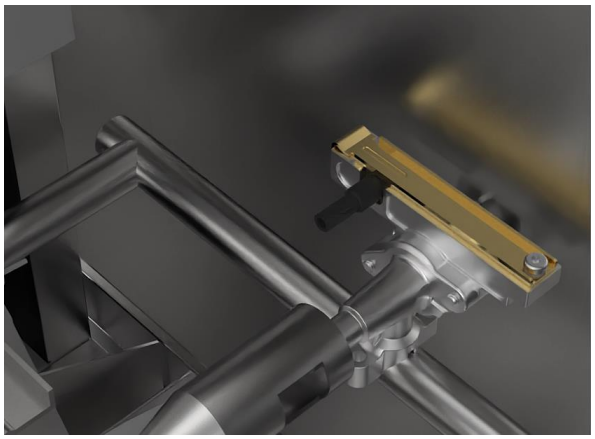

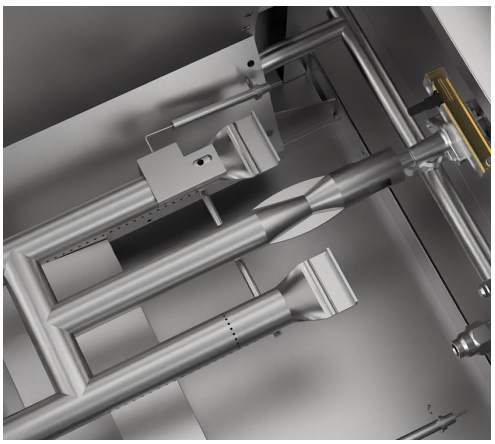

GAS CONNECTION

WARNING

NEVER CONNECT A GAS LINE DIRECTLY TO THE GRILL. A PRESSURE REGULATOR MUST BE INSTALLED ON ALL GAS EQUIPMENT. ALL LOCAL CODES REQUIRE THAT THE PRESSURE REGULATOR SUPPLIED WITH YOUR GRILL IS USED. REMOVING OR FAILING TO INSTALL THE PRESSURE REGULATOR CAN RESULT IN FIRE AND SERIOUS PERSONAL INJURY AND WILL VOID THE WARRANTY.

The grill is factory set to use either propane (LP) or natural ga (NAT). It is critical that the gas you use matches that which tl grill was set up for. You can verify that by checking the **rating plate**.

The Rating plate lists serial numbers, model numbers and gas type. This one is underneath the drip tray. The rating plate is located in one or more of the following places:

- Attached to the underside of the drip tray
- On the heat shield behind the front panel

Ensure that the gas supplied meets with the minimum pressure requirements. Do not operate the grill on any gas other than that for which the grill has been set.

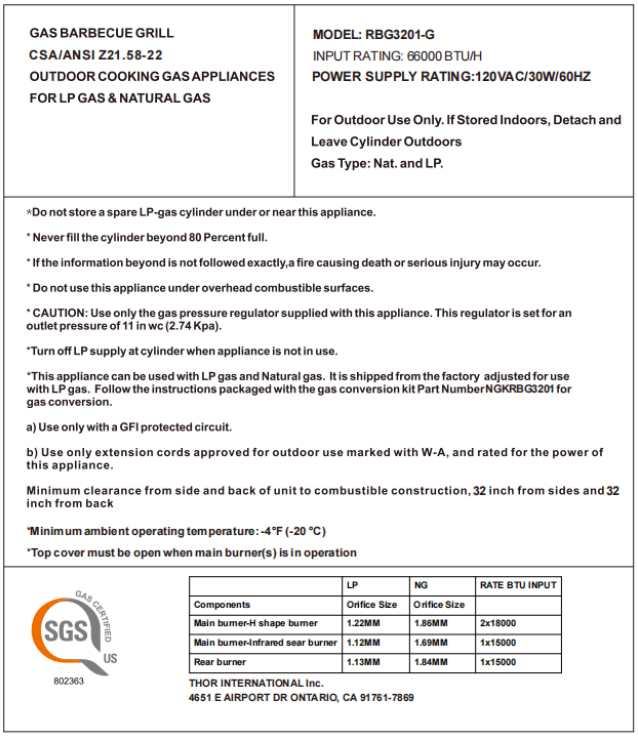

GAS BARBECUE GRILL
CSA/ANSI Z21.58-22
OUTDOOR COOKING GAS APPLIANCES
FOR LP GAS & NATURAL GAS

MODEL: RBG3201-G
INPUT RATING: 66000 BTU/H
POWER SUPPLY RATING:120VAC/30W/60HZ

For Outdoor Use Only. If Stored Indoors, Detach and Leave Cylinder Outdoors
Gas Type: Nat. and LP.

*Do not store a spare LP-gas cylinder under or near this appliance.
* Never fill the cylinder beyond 80 Percent full.
* If the information beyond is not followed exactly,a fire causing death or serious injury may occur.
* Do not use this appliance under overhead combustible surfaces.
* CAUTION: Use only the gas pressure regulator supplied with this appliance. This regulator is set for an outlet pressure of 11 in wc (2.74 Kpa).
*Turn off LP supply at cylinder when appliance is not in use.
*This appliance can be used with LP gas and Natural gas. It is shipped from the factory adjusted for use with LP gas. Follow the instructions packaged with the gas conversion kit Part Number NGKRBG3201 for gas conversion.
a) Use only with a GFI protected circuit.
b) Use only extension cords approved for outdoor use marked with W-A, and rated for the power of this appliance.
Minimum clearance from side and back of unit to combustible construction, 32 inch from sides and 32 inch from back
*Minimum ambient operating temperature: -4°F (-20 °C)
*Top cover must be open when main burner(s) is in operation

GAS CERTIFIED SGS US
802363

	LP	NG	RATE BTU INPUT
Components	Orifice Size	Orifice Size	
Main burner-H shape burner	1.22MM	1.86MM	2x18000
Main burner-Infrared sear burner	1.12MM	1.69MM	1x15000
Rear burner	1.13MM	1.84MM	1x15000

THOR INTERNATIONAL Inc.
4651 E AIRPORT DR ONTARIO, CA 91761-7869

Fuel	WC Max Inlet	WC Min Under Full Load
Nat Gas	7 in	4 in
LP	14 in	11

Water Column Requirements

Both the regulator and the manifold orifices have been tuned for the type of gas specified on the rating plate.

Converting to a different type of gas requires a conversion kit, available from your dealer and must be installed by a qualified technician.

Installation must conform with local codes or, in the absence of local codes, with either the National Fuel Gas Code, ANSI Z223.1/NFPA 54, Natural Gas and propane Installation Code, CSA B149.1, or Propane Storage and Handling Code, B149.2, in Canada. Canadian installations must conform to CGAB149.1/.2 natural gas/propane installation code. (Canada)

GAS CONNECTION

LP GAS

Grills set up for LP gas come equipped with an LP hose/regulator assembly for connection to a standard 20 lb. LP cylinder. (Type 1). All fittings necessary to attach the assembly to the grill are included.

Permanently plumbed LP connections, such as those in line with a bulk cylinder, require a 4/11 regulator.

When using the 4/11 regulator you must ensure that it is set for the proper fuel type. This is done by removing the regulator cap and gasket and looking at the bottom of the plunger to see what fuel type is visible. This is the regulator fuel setting. NAT is for natural gas and LP is for propane gas. The LP setting can be further identified by the large diameter disk on the bottom of the plunger. To change from one gas to the other simply push the plunger to the side to snap it out of the cap, turn the plunger so it reads the desired gas type on the bottom, and push the plunger until it snaps back into place in the cap then replace the cap into the regulator. Never connect an unregulated gas line to the grill.



LP cylinder with type 1 valve connection

WARNING

Do not change the regulator/hose assembly or use any other assembly than the one supplied with your grill. Do not attempt to use a 5LP-A equipped regulator/hose assembly with a standard 510 POL cylinder/valve assembly.
Do not store a spare LP-gas cylinder under or near this appliance.
Never fill the cylinder beyond 80 percent full.
If the information above is not followed exactly, a fire causing death or serious injury may occur.

LP Cylinder Requirements

The LP cylinder must be constructed and marked in accordance with the specifications for LP gas cylinders of the U.S. Department of Transportation (DOT) and designed for use with a Type 1 system only.
Cylinders of free standing grills must be secured using the provided cylinder retention system to avoid accidental movement.

When exchanging your cylinder for a refill, exchange only for a Type 1 20lb cylinder with an over-fill protection device.

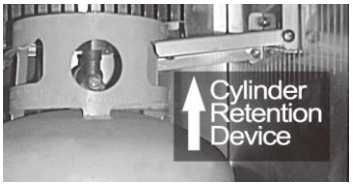

Never use a cylinder with a damaged valve.
A dented or rusty LP cylinder may be hazardous and should be avoided. If in doubt, have it checked by your LP supplier.
Always check for leaks after every LP cylinder change.
Always shut off the LP-gas supply at the cylinder when the grill is not in use.
Cylinders must be stored outdoors in a well-ventilated area out of the reach of children.

GAS CONNECTION

LP Connections

Make sure the LP cylinder valve is fully closed. It is possible for the valve to be open without releasing gas but, as soon as you start connecting the regulator, gas will leak from the connection.

Insert the regulator inlet into the cylinder valve and turn the black coupler clockwise until the coupler is hand tight. Do not over-tighten this connection.

To disconnect the coupler, first make sure the main cylinder valve is turned off . Grasp the coupler and turn counter clockwise. The inlet will then disengage.

Always leak-test the connection after refi lling or exchanging LP cylinders. (See INDEX: “Leak Test” for further details.)

Insert the regulator inlet into the cylinder valve and turn the black coupler clockwise until the coupler is hand tight. Do not over-tighten this connection.

To disconnect the coupler, first make sure the main cylinder valve is turned off . Grasp the coupler and turn counter clockwise. The inlet will then disengage.

Always leak-test the connection after refi lling or exchanging LP cylinders. (See INDEX: “Leak Test” for further details.)

NATURAL GAS

Only qualified professionals perform the required plumbing on this product.

To ensure satisfactory performance, the gas supply line must be sized to accommodate the total BTU requirements of all the gas-fi red equipment that will be connected to that line.

In no case should pipe less than 3/4” inside diameter or 1”outside diameter ever be used to connect this product.

- Calculate the total BTU output of all equipment and refer to “INDEX: Gas Supply Line Runs” for allowable run distances for ¾ inch pipe. Failure to meet these minimum requirements may reduce performance of the grill and any other appliances running on that supply line.
- Always keep supply line runs as short as possible.
- A gas shut-off valve must be installed in an easily accessible location by a qualified plumber.
- Keep threading compound off of the fi rst two pipe threads to avoid having any small pieces of compound break loose and clog a burner valve or orifi ce. Do not use threading compound on any flare fittings.

For built-in installations, it is recommended that any flexible pipe used be kept as short as possible.

Keep last two threads clean

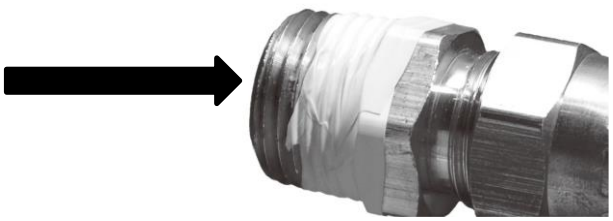

For freestanding units using natural gas, using a metal flex hose is recommended.

This is available at your local hardware store or from your dealer.

GAS CONNECTION

GAS LINE PURGING

You should purge the gas line of air before attempting to light the grill.

- Make sure all grill controls are in the “OFF” position.
- Slowly turn on the main gas supply.
- Push in the knob and confirm that the igniter is glowing. It is furthest from the fuel source and will completely purge the lines. It will take several seconds for the burner to light.
- Hold the knob HI for about 20 seconds to allow the air in the system to purge and the burner to light
- Wait at least 5 minutes after shutting off the control before attempting to light the burners.

NG AND BULK LP BUILT-IN INSTALLATION

Shut off the gas supply at the main valve

If connecting to a bulk propane tank, disconnect the brass elbow, hose and regulator from the grill.

Remove all fittings from the grill manifold.

Connect the gas supply to the grill as shown in the diagram on this page.

Turn the gas supply on and leak test all connections.

Never run flex hose behind the firebox. Run the hose at an angle, straight down or out of the back.

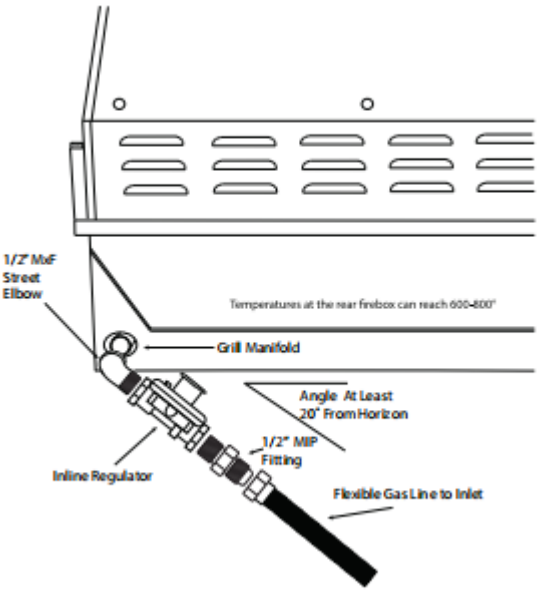

GAS CONVERSION KITS

Gas conversion kits are available from Thor Grills to allow the grill to operate on either Natural gas or LPG. These kits should be installed by a qualified technician.

The kits come with complete installation instructions. These instructions should be read completely and fully understood before installing the conversion kit.



LP CONVERSION KIT



NG CONVERSION KIT

GAS CONNECTION

NG AND BULK PROPANE CART INSTALLATION

- Shut off the gas supply at the main valve.
- Disconnect all plumbing (if already attached) from the grill and the gas supply valve.
- Remove all the fittings from the grill manifold.
- Connect the gas supply to the grill as shown in the diagrams on this page for your gas type.
- Turn the gas supply on and leak test all connections.

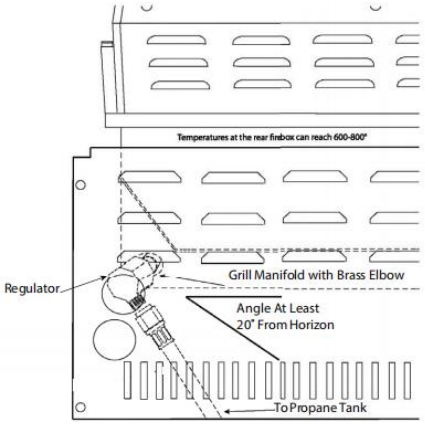

LP BOTTLE CART INSTALLATION

- Shut off the gas supply at the main valve.
- Connect the gas supply to the grill as shown in the diagram on this page for your gas type.
- Turn the gas supply on and leak test all connections.

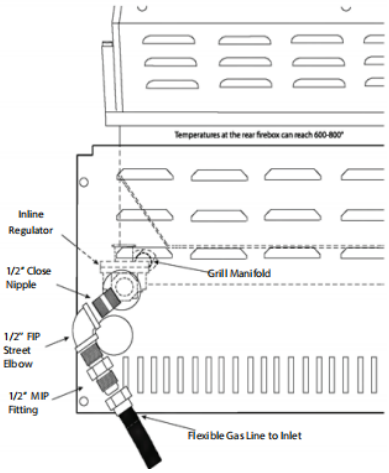

ELECTRICAL CONNECTIONS

WARNING:ELECTRICAL GROUNDING

- Product installation must meet local electric codes or, in the absence of local codes, the latest edition of the National Electrical Code ANSI/NFPA No. 70 or the Canadian Electrical Code CGA 1.6b2005.
- Use only a Ground Fault Interrupter (GFI) protected circuit with this outdoor cooking gas appliance.
- IMPORTANT: When connecting your rotisserie motor, first connect the motor to the grill and then plug the grill into the outlet.
- This grill is equipped with a three prong (grounding) electric plug for your protection against shock hazard and must be plugged directly into a properly grounded three prong outlet. Never cut or remove the grounding prong from this plug.
- Use only extension cords with a 3 prong grounding plug, rated for the power of the equipment, and approved for outdoor use with a “W-A” marking.
- To protect against electric shock, do not immerse any part of the power cord, an extension cord or any plugs in water or other liquid.
- Unplug the product from the outlet when not in use and before cleaning. Allow it to cool before putting on or taking off parts.
- Do not let the cord hang over the edge of a table or touch hot surfaces.
- Do not use an outdoor cooking gas appliance for purposes other than intended.
- Do not operate any outdoor cooking gas appliance with a damaged cord, plug, or after the appliance malfunctions or has been damaged in any manner. Contact the manufacturer for repair.

CONNECTION TO AC

Installation requires an outdoor 120VAC 15A GFI (Ground Fault Interrupter) electrical outlet adjacent to the grill.

The GFI outlet features an internal breaker that reduces shock hazard. This type of outlet should be installed by a qualified electrician either inside the island enclosure for built-in units, or near the location where a free-standing unit will be used.

For built-in grills, the supplied 12VDC should be installed below the grill within the cabinet enclosure. Select a location where the transformer is protected against water, heat and physical damage.

When installing the transformer to the grill be careful to prevent the wiring and transformer from contacting any hot surfaces behind or below the grill. It is recommended that the transformer be located below the grill in a readily accessible location. Be sure to provide adequate access to facilitate service if the transformer or connections should need future maintenance.

If the electrical system fails to operate, a connection may have come loose in shipping or the GFI may have tripped, requiring a reset. See the Troubleshooting section for more details.

FINAL CHECKS

LEAK TESTING

DANGER!

To prevent fire or explosion hazard, DO NOT smoke or allow any potential source of ignition (sparks, electrical arcing, etc) in the area while performing a leak test. Leak tests should be conducted outdoors only. Never conduct a leak test using fire or flame.

Leak Test Procedure:

- Create a soapy solution of 1 part soap and 3 parts water.
- Confirm that all control knobs are in the off position.
- Turn on the fuel supply. For natural gas, turn the valve handle 1/4 turn to align with the gas flow.
- For L.P., turn the cylinder valve knob counter clockwise one full rotation.
- Apply the soap solution generously by paint brush or squirt bottle on all connections and fittings.
- If bubbles appear to "grow" on any of the connections, you have a gas leak. IMMEDIATELY turn off the gas supply.

Fixing a Gas Leak:

- Shut off the gas supply.
- Turn all grill controls to the "HI" position to purge the grill of any gas build-up, then turn the controls back "OFF".
- Wash off the soapy solution with cold water and dry.
- Tighten the loose joint, or replace the faulty part with manufacturer-recommended replacement parts.
- DO NOT attempt to repair the L.P. cylinder valve if it is damaged. The only way to safely resolve a damaged cylinder is to REPLACE IT.
- Repeat the leak test to ensure that no leaks are present.

LOW HEAT BURNER ADJUSTMENT

The main ceramic burners and burners on your grill feature an adjustable low setting.

Fluctuations in gas pressure, gas conversion and even in the quality of the gas itself may affect burner performance at the "LOW" setting. It could be either too high or too low.

To Adjust the Burner to a Low Setting:

- Make sure the grill is cool.
- Remove the racks so you can see the flames while adjusting the burners.
- Light the burner and allow it to preheat on high for 3 minutes.
- Turn the burner to "LOW".
- Pull off the control knob.
- While holding the valve shaft with pliers as shown insert a small flat screwdriver into the center shaft and adjust the flame's low setting.

FINAL CHECKS

Counterclockwise will lower the flame setting, clockwise will raise it.

The proper setting is where the flame is stable at its lowest setting. A slight flutter will be present in the crossover portion of the front of the burner before the burner itself becomes weak.

The factory setting for propane gas is ½ to ¾ turn from the very bottom of the adjustment. The setting for natural gas is 1-½ to 1-¾ from the bottom. After the low settings are proper, turn all burners to high for visual inspection.





DANGER!

BE EXTREMELY CAREFUL AROUND HOT BURNERS AND OTHER GRILL PARTS.

BURNER FLAME ADJUSTMENT

The appearance of the burner should be visually checked.There should be no lifting, fluttering or lazy blue flames. Some food particles will show as yellow flames but should burn off.

IMPORTANT:

Make sure the owner knows where the main gas supply shut off valve is located.

Finally, for safety and for proper use & care, you must leave this manual with the owner. Make sure you advise them to keep it for future reference.

For technical assistance call:

(877) 288 -8099

ONE LAST THING

Finally, before leaving, check all the burners for proper operation.Make sure the control knobs turn freely and completely through their full range.

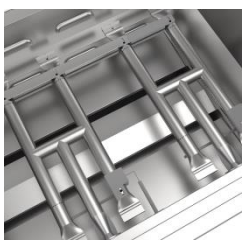

H-Shape SS Burner

CHECKLIST BEFORE EACH USE (FOR SAFETY)

	Check item	Action	
1	Do you smell gas?	If yes, shut off everything and call the gas company or a qualifi ed plumber to check for leaks	If not, please Continue.
2	Are you prepared to stay with the grill during the entire cooking process?	If yes, please Continue.	If not, gather what you need before starting the lighting process.
3	Is your cooking area free and clear of any combustibles, besides your food, that might ignite?	If yes, please continue.	If not, clear the area before starting the lighting process
4	Do all control knobs turn freely?	If yes, please continue.	If not, call for service.
5	If you are using a portable propane cylinder, is it connected and leak tested?	If yes, please continue.	If not, locate it before continuing.
6	Do you know where your grill's main gas supply shut off valve is located?	If yes, please continue.	If not, locate it before continuing.
7	Are all burners properly seated in the grill with mounting legs in slots?	If yes, please continue.	If not, seat the burners properly before continuing.
8	Is the wind blowing just lightly and not blowing on the back of the grill?	If yes, please continue with the lighting process.	If not, wait until the wind subsides or turn your free standing grill so the wind goes into the front of the grill.

IMPORTANT SAFETY WARNINGS

PLEASE REVIEW THESE IMPORTANT SAFETY PRECAUTIONS BEFORE YOU USE YOUR GRILL

1.NEVER LEAVE THE GRILL UNATTENDED WHILE COOKING.

2. Ensure all tie-down wires have been removed from the burners.

3. Always use caution when operating the grill in a windy area. (See INDEX: “Grilling in Windy Conditions” for further details.)

4. Avoid wearing loose-fi tting garments or long sleeves while grilling. They could ignite.

5. Never touch the grill racks, hood or immediate surrounding metal surfaces with your bare hands while grilling.

6. Use an insulated glove or mitt when opening and operating the grill. Always open the grill lid slowly to allow heat and smoke to escape before fully opening.

7. The grill hood must be fully opened while lighting the grill. Releasing fuel into a closed grill before lighting will not make it light sooner or more effi ciently. It will only risk explosion and personal injury or death. Never lean over a hot grill surface or look directly into the grill when attempting to light.

8. Do not heat unopened food containers as pressure build-up will cause the container to explode.

9. Do not use aluminum foil to line grill racks or drip pans.This will alter the airfl ow or trap excessive heat in the control area and can melt control knobs and ignition modules. Such damage is specifically excluded from your warranty.

10. Never use charcoal or any other solid fuel in the grill.

11. Cooking excessively fatty meats and oils will cause flare ups. Internal fires or damage caused by them or by the grill being left unattended while cooking are not covered under the terms and conditions of our warranty.

12. Never grill without the drip pan in place. Always ensure down before attempting to handle or dispose of it. The the drip pan is pushed all the way to the back of the grill. Hot grease can leak downward and produce a fire or explosion.

13. Grease is extremely fl ammable. Let hot grease cool drip tray should be cleaned of grease on a regular basis.

14. Do not use the grill unless a leak check has been performed on all gas connections.(See INDEX: “Leak Test Procedure” for further details.)

15. Never operate the grill while under the influence of alcohol or drugs.

16. Do not lean on side shelves and never place a load operation, turn off all gas control knobs, open the hood and wait fi ve (5) minutes before attempting to re-light.

18. Portable L.P. cylinders: Always shut off weighing more than 22 pounds on a side shelf.

17. If any burner does not light or goes out during the main valve on the L.P. cylinder after each use.

19. Spiders and insects like to nest in the burners, venturis,valves and orifices of a grill, disrupting the gas flow. This very dangerous condition can cause a fire behind the control panel, damaging the grill and risking personal injury. If your grill has been unused for a long time, inspect and clean the burners, venturis, valves and orifices.

GRILLING IN WINDY CONDITIONS

Outdoor grills create more heat than interior kitchen ranges.That's how they sear and grill steaks and other foods.

These high-performance burners require a constant, steady supply of fresh air to mix with the fuel. Your grill pulls air in through the front and vents hot gases out through the rear.



Air enters through the front of the grill.

Using your grill in windy conditions may disrupt the front-to-back air flow. If, while grilling with all burners on high and the hood closed, you notice that the temperature gauge fails to rise ... be careful. If wind has kept hot gases from exiting the rear of the grill, the control panel and knobs may have become extremely hot.



Your grill features a heat stabilizer that will deflect wind and, in most cases, prevent this situation.

But there are a few things you can do to further prevent the possibility of improper heat buildup.

- On breezy days, be careful not to leave the front hood down when the burners are on high if the grill is unattended.

- If you suspect the grill is overheating, using an oven mitt, open the front hood, then adjust the burner control knob to a lower setting.

-Install your grill with a wind break behind it.

-Orient the grill so prevailing winds are not blowing into the rear of the grill..

⚠ Please Note: Any damage caused from use in windy conditions, such as melted knobs or igniter wires, or control panel discoloration from heat buildup, is excluded from warranty coverage.

USING YOUR GRILL

Grilling requires high heat for searing and low, controlled heat for slow cooking.

Thinner cuts of food are often cooked at a “HI” heat setting with the lid open.

On the other hand, large, thick pieces of meat or poultry are often fi rst seared at the high setting and then grilled at a lower setting ... sometimes with the lid closed ... achieving the best results in the middle of the food without burning the outside.

Some foods are cooked using direct heat and some using indirect heat.

Your grill features a variety of professional-level burners and tools for meeting the wide variety of cooking challenges. We will reveal how these features work for you. So please read and enjoy!

1.32inch H-Shape SS Burner

This stainless steel burners are rust-resistant for durability



2.Rear Infrared Burner

This infrared burner spans the back of the cooking surface and provides consistent heat for slow rotisserie cooking.



USING YOUR GRILL

PRE-GRILL CHECKLIST

BEFORE YOUR FIRST USE

There are a few must-check safety precautions to consider before you use your grill. Please be sure that:

- All packing materials and tie-downs have been removed from the burners. (See INDEX: “Unpacking & Assembly” for further details.)
- You have fuel connected. (See INDEX: “Gas Requirements” for further details.)
- You have electric connected. (See INDEX: “Electric Requirements” for further details.)
- A qualified plumber has performed a leak test on all the fittings that supply fuel to your grill.

IF YOUR GRILL DOES NOT LIGHT IN 4 TO 5 SECONDS you may need to purge the line. (See INDEX: “Purging the Gas Line”

AT EACH NEW SEASON

At the start of each new grilling season you should remove the grilling racks and check the burners, venturis, orifices and valves for obstructions.

Spiders and insects often nest in these areas of the grill and can disrupt air flow, causing damage to the grill and personal injury.

Also, check all hoses and fittings for damage, abrasion, wear and tear.

BEFORE EACH USE

Before any use, always make sure that:

- you do not smell gas before you light the grill. If you do smell gas, shut everything off and have a qualified plumber check for leaks.
- the cooking area is free and clear of any combustibles, besides your food, that might ignite.
- the control knobs turn freely.
- if you are using a portable propane cylinder, it is securely connected and leak tested.
- you know where the main gas supply shut-off is located.
- the burners are seated properly in the grill. The main burners must sit level and fi rmly on the burner mounting support frame.
- wind is not blowing too strongly or blowing on the back of grill.

USING YOUR GRILL

LIGHTING YOUR GRILL

WARNING

1.Never attempt to light a burner if you smell gas.

2. Always keep the lid open when lighting your grill.

3. Releasing fuel into a closed grill before lighting will increase the risk of explosion, property damage, personal injury or death.

4. Keep your face and body as far from the grill as possible when lighting. Any time a burner doesn't light within 5 seconds, turn off the control, wait 5 minutes for gas to dissipate, and repeat the lighting procedure.

5. YOU NEVER LEAVE THE GRILL UNATTENDED WHILE COOKING.

ELECTRIC IGNITION

Before proceeding, make sure you have completed the "Before Each Use" checklist.

Follow these steps to light any of the burners on your grill:

First, make sure all burner control knobs are set to OFF.

TO LIGHT MAIN BURNER

1.Push and turn main burner knob slowly to HI position,should be light immediately, adjust knob as desire after burner is lit.

2.If burner does not light within 5 seconds, turn the knob to OFF and repeat the lighting procedure.

3.If burner does not light up after step 2 :

. Turn the knob to OFF, wait 5 minutes and repeat the lighting procedure

. Alternatively, light with a match

TO LIGHT MAIN INFRARED BURNER AND INFRARED REAR BURNER

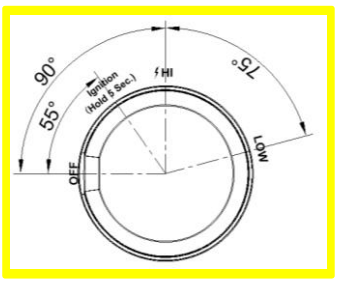

1. Read all instructions before lighting.
2. Open the lid before lighting the grill.
3. Ensure all burner control knobs are in the OFF position.
4. Push and turn the knob to Ignition position for 5 seconds.
5. Turn the knob to HI position,should be light immediately.
5. If ignition does not occur within 5 seconds:

- Turn the knobs to OFF, wait 5minutes, and repeat the lighting process
- Alternatively, light with a match

The infrared rear burner grill features a flame sensor with a safety valve that automatically shuts off the flow of gas if the burner goes out for any reason.

USING YOUR GRILL

COLD WEATHER WARNING: PROPANE

Extremely cold temperatures may cause your burners to light inside the burners instead of outside. Once lit, if you hear a 'whooshing' sound, immediately turn the burner knobs off to extinguish the flame and then immediately re-light the burners.

MANUAL LIGHTING

If a burner doesn't light after several attempts, it can be match lit using the lighting rod stored in the drip tray. First, make sure you've returned all of the control knobs to the OFF position and have allowed 5 minutes for any accumulated gas to dissipate before attempting to match light a burner. **Match lighting is only possible when the grill is connected to a working outlet or a fresh battery is installed.**

MATCH LIGHT BURNER

To match-light this burner, use the lighting rod to insert a lit match through the cooking grate and through the protective screen.

Push and turn the corresponding burner control knob to "HIGH". If the burner doesn't light within 5 seconds turn the knob off and wait 5 minutes before attempting to light it again.

BASIC GRILLING

PRE-HEATING

Pre-heating your grill every time you use it is extremely important. Pre-heating allows the briquettes to properly heat up, providing more even and more consistent cooking results.

Pre-heat your grill by igniting all burners and setting them to "HIGH".

Then close the hood and allow the grill to heat for 10 to 15 minutes. Once you've reached your desired pre-heat temperature, turn off the burners that you won't be using to cook your food. Remember, surface temperature can be up to 200° higher.

WARNING!

DO NOT LEAVE THE GRILL UNATTENDED DURING THE PRE-HEAT CYCLE OR AT ANY TIME WHILE THE GRILL IS IN USE. PRE-HEATING FOR MORE THAN 15 MINUTES MAY OVERHEAT THE GRILL, CAUSING DAMAGE TO THE GRILL.

TYPES OF COOKING

The burners in your grill are capable of creating a range of heat intensities. By varying the heat output, the number of burners used and the position of the hood, you can create either direct or indirect heat

or a combination of both and develop a wide variety of succulent recipes. There are two basic types of grilling in an outdoor grill... Direct Heat and Indirect Heat

Direct Heat

Direct heat cooking occurs when foods are placed directly over the heat source. This form of heat is known as “radiant” heat because the heat radiates directly from the source to the food.

Direct heat is a must when you want to sear the outside of your food to seal in flavor. Burners provide the heat necessary to sear foods and seal in flavor.

Indirect Heat

Indirect heat cooking occurs when the food is not close to the heat source. Heat reaches the food via air movement within the cooking area. This form of heat is known as “convection” heat.

Indirect, or “convection” cooking is achieved by placing the food on one side of the grill and igniting burners on the other side. You leave the burner below the food “OFF”. You should keep the hood closed as much as possible during this type of cooking to maintain even heat around the food. You regulate the heat by adjusting the burner and using the hood thermometer to monitor the temperature.

Professional restaurant chefs rely on a different type of heat ... infrared heat ... to create a higher searing temperature than what standard burners can achieve. Thor Grills provides the infrared burner.

Infrared burners work by focusing the gas flame through a ceramic element filled with tiny holes.

These holes focus the fl ame on the surface of the element, creating an intense heat much higher than that of a standard brass burner. It allows you to sear your food more quickly while leaving the inside rare, if desired.

The burner, with its advanced components, requires particular attention to lighting, usage and cleaning guidelines.

Pre-Heating the Burner

Always preheat the entire grill before cooking to achieve consistent, successful results.

If the grill is already hot from cooking you should still pre-heat the burner for 2-3 minutes, or until it glows red.

Never place food over a burner before it is fully pre-heated because food particles and grease dripping onto a cold burner can clog the tiny ports and damage the burner.

For the same reason you should minimize water spills on the burner and should not use water to control flare-ups.Take special care to minimize dropping any liquids on the burner while cleaning the cooking grids.

USING YOUR GRILL

HOW TO SEAR

Searing locks in fl avor and juices while allowing the food's outer surface to absorb smoke and food-born aromas produced when drippings are vaporized by the burner.

SAFETY PRECAUTIONS

Grill cooking grids are heavy duty. Dropping them on the Burner will damage the burner. Such

damage is not covered by the product warranty and will cause a fire, burns or other personal injury.

CLEANING

It's easy to keep your Burner operating at peak performance. Just run it on "HI" with the hood open for 15 minutes after each use to burn away any food particles or drippings.

Any ash accumulation on the burner screen can be removed with a light brush (like a paint brush) or

vacuum … BUT WAIT UNTIL THE BURNER IS COOL!

USING THE ROTISSERIE BURNER

Rotisserie cooking provides an even delivery of heat to your foods. It has noequal. The constant rotation not only cooks foods evenly, it also self bastes. As juices rise to the surface of the food, they naturally fl ow around it as it rotates. And, by moving the burner out from beneath the food, you avoid scorching flare-ups.

Your foods will be more evenly cooked, more tender and juicier when slow-roasted on a rotisserie.

The rotisserie system consists of four main parts, the motor, the skewer, the forks and the infrared burner.

The Motor

Install the motor by sliding it into one of the slots shown here.



Plug the motor power cord into the built-in power outlet on the rear left into an AC power supply for the rotisserie to work.

Place a basting pan in the grill to prevent food accumulations on the briquettes and burners. But BE SURE YOU REMOVE IT before using any of the other burners.

When the rotisserie is not in use the rotisserie motor should be stored in a cool dry location.



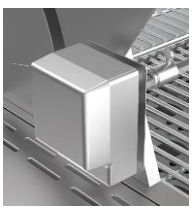

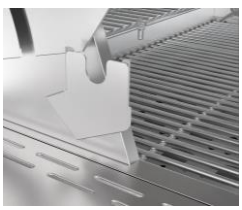

Rotisserie
Motor Mount

USING YOUR GRILL

The Skewer & Forks

The rotisserie can handle large food items up to 33 lbs. You should prepare any item first and mount it on the skewer.

Swing the warming rack up and out of the way. It will rest in place.

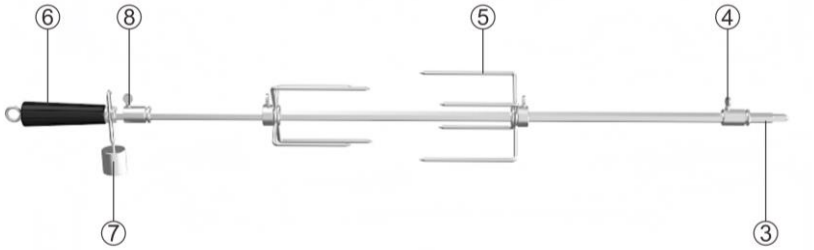

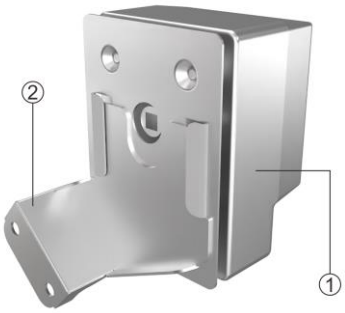

No.	Qty	Description
1	1	110V Motor
2	1	Motor Bracket
3	1	Spit Rod
4	2	Shaft Collar
5	2	4-Prong Fork
6	1	Handle
7	1	Counterbalance
8	2	Screw
9	2	Hexagonal Head Screw

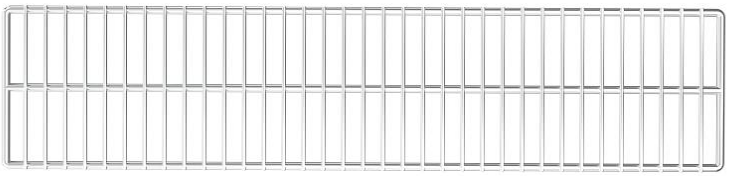

Then mount the skewer on the grill before lighting the rotisserie infrared burner. Lighting the burner first could result in burning your hands while trying to mount the skewer on the grill.

It's okay to remove the grill racks to make room for large foods on the skewer.

To load the skewer, slide one of the forks onto the skewer. Push the skewer through the center of the food, then slide the second fork onto the skewer. Center the food to be cooked on the skewer then push the forks firmly together. Tighten the thumb screws (use pliers if necessary). You should wrap any loose, dangling pieces of food (like wings) with butcher's string (never use nylon or plastic string).

With the food secured to the skewer slowly roll the skewer in the palms of your hands to check for balance. It should rotate smoothly. If you find it has a heavy side, adjust where the skewer pierces the meat. An unbalanced skewer will cause uneven rotation and uneven cooking. It's normal for the skewer to flex with large foods. Slide the pointed end of the skewer into the motor and rest the other end on the rollers on the other side of the grill.

USING YOUR GRILL

The notched portion of the skewer must rest on the rollers for proper operation.

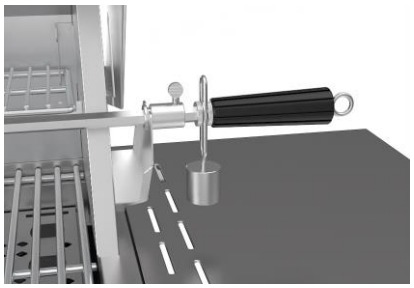

Rear Infrared Burner

To light the rotisserie infrared burner, first mount the skewered food item on the grill then follow the rotisserie lighting procedure.

Once lit, the rotisserie burner should reach cooking temperatures in about 1 minute. It will glow evenly across its surface in about 5 minutes.

NOTE: The grill thermometer should not be used for rotisserie cooking. It is not designed to read direct infrared heat.

If the burner will not stay lit when you release the control knob, re-light it and hold the control knob in for at least 60 seconds to allow the thermocouple to heat up.

If, after holding the control knob in for at least 60 seconds, the burner still will not stay lit when releasing the control knob, call for service.

Shut off all other burners while using the rotisserie burner.



CLEANING YOUR GRILL

STAINLESS STEEL

Our products are known for their attractive appearance. We achieve this by selecting only the finest grades of stainless steel and applying exacting workmanship.

In order to maintain this attractive appearance over the life of the grill it is important to take the following steps:

- After each use wipe down the exterior of the grill to remove grease and splatters.
- Be sure to follow the cleaning instructions for keeping the grates and burners clean and ready for use.
- Use a commercially available Stainless Steel cleaner to clean and polish the exterior surfaces.

Doing these things on a regular basis minimizes the amount of effort required.

Part of the appeal of your Grill is the fine grain finish. When removing stubborn stains:

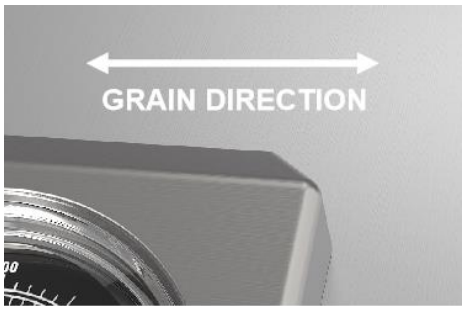

- Do not use metallic abrasives and always rub in the direction of the grain.
- Do not use metallic abrasives and always rub in the direction of the grain.
- Some household cleaning products are not suitable for stainless steel; be sure to read the label before using on your Grill.
- Always use the mildest cleaning solution first, scrubbing in the direction of the grain. Specks of grease may gather in the grain of the stainless steel and bake on to the surface, giving the appearance of rust.
- To remove these baked-on foods use a fine to medium grit non-metallic abrasive pad (Scotch Brite is good) in conjunction with a stainless steel cleaner.
- Solutions used for cleaning concrete and masonry can be very corrosive and will 'attack' stainless steel. Ensure your products are well protected before you allow the use of such chemicals near your grill.

SPECIAL NOTE FOR LOCATIONS NEAR POOLS AND COASTAL AREAS:

The 304 stainless steel material used in the construction of the grill is highly rust resistant, however, chlorine in the air from swimming pools or the salt from sea air may cause surface rust to appear and even create some pitting if left on the product.

Here are a few tips to avoid this:

- Regularly wipe down the exterior surfaces with a damp cloth. (Micro fi ber cloths perform very well).
- Allow the surfaces to dry before installing the cover. Do not cover a damp grill.

CLEANING YOUR GRILL

• In extreme environments apply a rust inhibitor which leaves a microscopic protective layer on the grill. Products that provide a layer of vapor corrosion inhibitors (VpCI™) protect the surface very well.

• For seasonal storage use the product referred to above, ensure the grill is dry and then cover and secure the cover to minimize the amount of damp air getting to the surfaces.

THE LIMITED LIFE TIME WARRANTY PROVIDES PROTECTION AGAINST RUST THROUGH OF PARTS THAT RENDER THE PRODUCT INOPERATIVE. IT DOES NOT COVER OCCASIONAL SURFACE RUST OR STAINING DUE TO ENVIRONMENTAL CONDITIONS.

After your fi rst use certain areas of the grill may discolor from the intense heat given off by the burners - this is normal and cannot be cleaned off .

For light and heavy food stains there are many different stainless steel cleaners available.

DRIP TRAY

The drip tray should be cleaned after each use. After the grill is completely cool, remove the drip tray by pulling it out until it stops, then lifting the front edge until the drip tray comes free.

Clean it with hot soapy water or an oven-style cleaning product and re-install. When using an oven-style cleaning product be sure to carefully follow the manufacturer's instructions. Many of these cleaners are toxic and can damage the stainless steel finish if not used properly.

Also, check the tray after rain.

 WARNING!

DO NOT ALLOW EXCESS GREASE OR LIQUIDS TO ACCUMULATE IN THE DRIP TRAY AS THIS MAY

CREATE A FIRE HAZARD.

NEVER USE GRILL WITHOUT DRIP TRAY PROPERLY INSTALLED.

GRILLING RACKS

The easiest way to clean the grill racks is to do so immediately after turning off the burners, while they are still hot. Wearing a long BBQ mitt to protect your hand from steam, dip a brass bristle brush in hot water and scrub the grill rack. Dip the brush frequently because the steam helps remove baked-on foods.

BURNER

It's easy to keep your burner operating at peak performance. Just run it on "HI" with the hood open for 5 minutes after each use to burn away any food particles or drippings.

Any ash accumulation on the burner screen can be removed with a light brush or vacuum ... BUT WAIT UNTIL THE BURNER IS COOL!

Every 3 to 6 months, remove the burner and inspect the venturi (inlet) and orifice to ensure that they're free ofobstructions.

Food debris on the inside of the burner can be gently shaken out. Do not touch the ceramic surface.

When re-installing the burner, be sure to correctly position the burner.

CLEANING YOUR GRILL

WARNING!

PROPER PLACEMENT OF EACH BURNER IS CRITICAL. AFTER CLEANING THEY MUST BE CENTERED ON THE ORIFICE.

RESTING LEVEL WITHOUT ANY ROCKING.

FAILURE TO MEET THESE CONDITIONS MAY CAUSE A VERY DANGEROUS CONDITION THAT CAN

CAUSE PERSONAL INJURY AND PROPERTY DAMAGE.

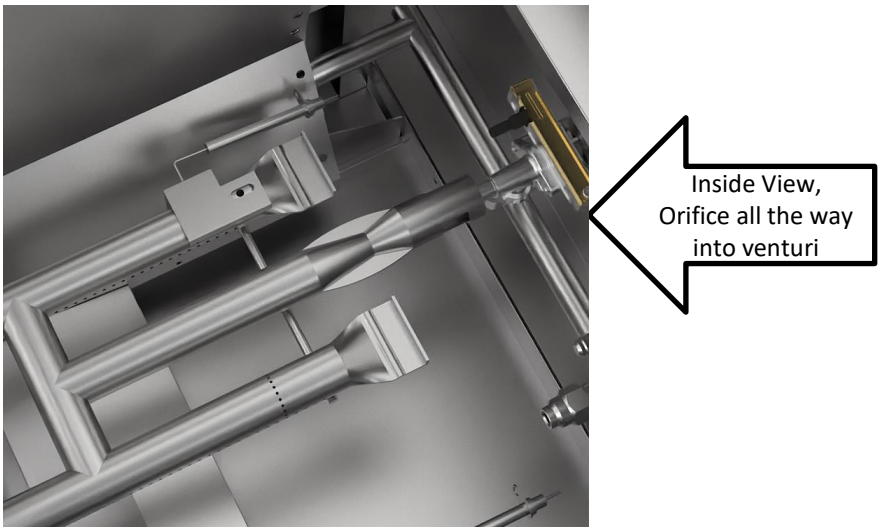

WARNING - REQUIRED MAINTENANCE

1. Failure to perform required maintenance will void your warranty
2. Scrape the bottom of the fi rebox with a plastic utty knife or similar toll and discard the residue.
3. Clean out the burner orifi ces and ensure they are free of debris.
4. Clean the drip tray.

TROUBLESHOOTING YOUR GRILL

BEFORE YOU CALL FOR SERVICE

Please check a few things before calling for service:

- Is there fuel supplied to the grill?
- Is the main shut-off valve open?
- Are you using the correct type of fuel? (LP or Natural Gas)
- Is your propane cylinder empty? Have you recently refilled the propane cylinder? If so, is the connection tight?
- Have you opened the valve on the propane cylinder?
- Is the grill plugged in to a live electric circuit?

If you've checked the above items, review the trouble-shooting list below before calling for service.

POTENTIAL PROBLEMS

GRILL WON'T LIGHT

First, confirm that the grill is getting electricity by turning on the lights, then:

Check The Igniters

Your grill uses an piezoelectric ignition system that does not spark.Instead the igniters should glow constantly when a control knob is pushed in.

- Ensure that all burner controls are set to OFF.
- Remove the cooking grate.
- Watch an igniter as you push in and hold the corresponding control knob. You will need either a small mirror or shiny metal object to see the igniter under its cover. (Be sure you push in the correct control knob and keep the knob in the "OFF" position).
- Check the remaining igniters. If igniters don't glow, proceed with troubleshooting or match-light the burner.

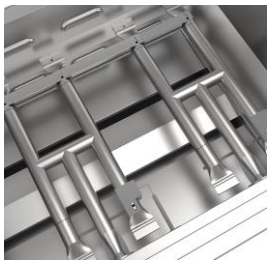

Check The Burners

If the igniters are working check to see if gas is reaching the burners by attempting to match light a burner.

BE CAREFUL! IF THE BURNER FAILS TO IGNITE, WAIT 5 MINUTES BEFORE ATTEMPTING TO IGNITE OTHER BURNERS!

If match lighting doesn't work, re-check fuel connections for leaks and ensure the supply is of the correct type and is of adequate pressure. (See INDEX: "Leak Test Procedure" for further details.)

If the burner will light with a match, then the igniter may not be functioning correctly. Call for service.

If the burner will not match light, and you know you are getting gas, wait for any gas to dissipate and remove the burner and check it for blockages.

SMELL OF GAS WHILE COOKING

IF YOU SMELL GAS WHILE THE GRILL IS OPERATING, IMMEDIATELY TURN OFF ALL BURNERS AND SHUT OFF THE MAIN FUEL SUPPLY.

- Perform a leak test (See INDEX: "Leak Test Procedure"for further details.)

POTENTIAL PROBLEMS

• Check for blockages (See INDEX: “Clean the Burner” for further details.)

LOW OR INSUFFICIENT HEAT

No part of the grill should ever be lined with aluminum foil. Doing so will interfere with airfl ow and can cause a low heat condition.

Ensure that you’ve preheated the main burners for at least 10 to 15 minutes with the hood closed.

Proper leveling during installation is critical. A grill that is out of level will cause erratic burner combustion and inefficient, uneven heating. A carpenter’s spirit level should be used to level the grill both front-to-back and side-to-side.

If the low heat problem persists:

• Check the gas supply line sizing requirements.

• Check the gas supply line for kinks or damage.

REPLACE any damaged supply lines.

• Check the Regulator

Make sure that the regulator & hose assembly is the one designed for and supplied with your grill and that it is correctly set up for the type of fuel you are using.

The hose and regulator provided must be used if your grill is set-up for an LP Gas Cylinder. Ensure the LP hose is not behind the grill.

Check that there is no physical pressure being applied to the regulator attached to the back of the grill. The regulator contains a fl exible diaphragm and should not be allowed to touch the grill body or its surroundings.

• Check for Obstructions

Ensure that the burners and drip tray are clean and free from obstructions.

LP (Propane) units:

• Is the cylinder almost empty?

Almost-empty cylinders may not have sufficient pressure to run the burners at high heat.

• Have the line pressure checked by a qualified technician

• Flow Limiting Device

Improper lighting procedures may have activated the LP cylinder’s flow control device, reducing the heat output.

To reset the flow control:

• Shut off all burner controls and close the LP cylinder valve.

• Wait 30 seconds and, very slowly, reopen the cylinder valve.

• Wait a few seconds and relite a burner.

Bulk LP cylinder users:

Bulk LP cylinder lines must be properly regulated.

Ensure that you are using a 4/11 appliance regulator supplied by Thorkitchen and converted to LP gas.

Also ensure that you do not have more than one regulator in line.

Natural Gas units:

• Supply Line

Ensure that the supply line is at least 3/4" inside diameter or 1" outside diameter.

• Check line pressure

Natural gas inlet pressure should be at least 5" W.C. and manifold pressure not less than 4 " W.C. under full load (with all burners on.)

• Check burners for blockages.

• Check flame characteristics.

WIND HITTING GRILL

Wind hitting the grill while in use, especially winds blowing into or across the hood gap from behind, can cause poor performance and in some cases can cause the control panel to get dangerously hot. Steady or gusty winds can prevent the normal exhaust of hot gases. Locate your grill away from prevailing winds and avoid grilling in windy conditions.

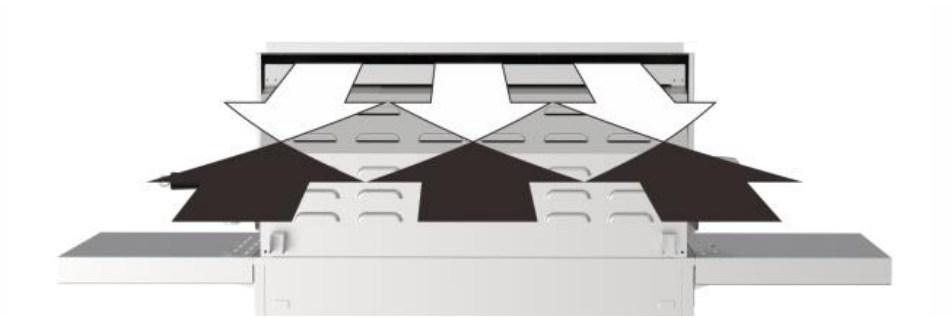

BURNER GOES OUT

• Location

First determine if the problem is being caused by location. If the grill is subject to high winds, reposition it to provide some protection.

• Check the Flame

Check the gas supply and fl ame characteristics. (See INDEX: "Flame, Correct Size")

POTENTIAL PROBLEMS

• Burners Seated

Check to ensure that the burners are correctly positioned in the grill.

Correctly-installed burners should be seated firmly and level with no side-to-side movement.

• BURNER GOES OUT ONLY WHEN SET TO "LOW"

The valves on the grill feature an adjustable low setting.

Fluctuations in gas pressure, gas conversion and even in the quality of the gas itself may affect burner performance at the "LOW" setting. It could be either too high or too low.

ROTISSERIE WON'T LIGHT

Follow the same procedure as described for the grill burners to diagnose problems with the rotisserie burner. BE CAREFUL! The rotisserie burner flame may be hard to see in bright sunny conditions.

ROTISSERIE LIGHTS BUT GOES OUT AS SOON AS CONTROL IS RELEASED

• Check Thermocouple

The control knob must be held in for 30 to 60 seconds after ignition for the rotisserie burner to stay lit. If the burner will not stay lit when you release the control knob, re-light it and hold the control knob in for at least 60 seconds to allow the thermocouple to heat up.

If, after holding the control knob in for at least 60 seconds, the burner still will not stay lit when releasing the control knob, call for service.

LIGHTS WON'T LIGHT

• Check Power

Ensure that the grill is connected to a live AC power source and check for rotisserie motor operation.

• Reset Transformer

Disconnect power from the grill and wait 5 minutes for the transformer to cool down and reset. Then reconnect power. If, after resetting the transformer and replacing bulbs, you still do not have power, call for service.

• Replace the Bulb



POTENTIAL PROBLEMS

Replacement bulbs are halogen, 12 volt, 10W max, G4 bi-pin, and are readily available at most stores. The bulb is held in place by two screws. You may have to loosen two screws to remove the bulb.

Avoid touching the glass of a new bulb. Halogen bulbs are very sensitive to the oils found in human skin. Touching the bulbs may shorten their life.

Pull the bulb straight out from the socket without twisting.

Hold the bulb using a paper towel or other cloth and gently press it straight into the socket. The glass cover should be gently snapped back into place.



WARRANTY

Warranty&Service

This product has been manufactured by Thor International, 4651 E Airport Dr, Ontario, CA 91761

For Customer Service, please call (877) 288 - 8099

For the most up to date warranty and service policy, please refer to our website WWW.THORKITCHEN.COM/WARRANTY-REGISTRATION

For in-warranty service requests, please visit our website at WWW.THORKITCHEN.COM/SERVICE

Please Note: You must provide proof of purchase or installation date for any in- warranty service requests

We Stand Behind the Quality of Our Appliances.

Reliability and customer satisfaction are our top priorities. We offer a solid two-year warranty on both parts and labor. Enjoy professional-grade performance with the confidence that we've got you covered.

Warranty Registration Made Easy.

01 Scan the QR Code or visit thorkitchen.com/register-your-product.

02 Input your purchase and product information and select register.

03 That's it. You're all set. Enjoy!

Questions: service@thorinternational.com

WARRANTY

PARTS