Installation Manual

Installation and Fireplace Setup

Pour demander un exemplaire en français de ce Manuel du propriétaire, visitez www.fireplaces.com/translations.

INSTALLER: Leave this manual with party responsible for use and operation.
OWNER: Retain this manual for future reference.

Contact your dealer with questions on installation, operation, or service.

MAJESTIC

Model(s):

WARMMAJIC-D

c UL us LISTED

PFS c us

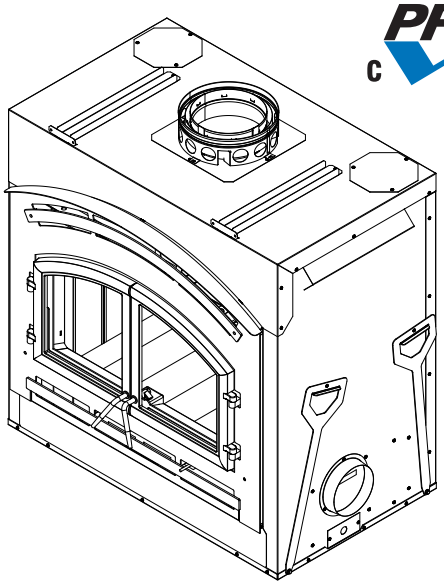

EPA CERTIFIED WOODBURNING FIREPLACE

Installation and service of this appliance should be performed by qualified personnel, Hearth & Home Technologies recommends HHT Factory Trained or NFI certified professionals.

hearthED FACTORY TRAINING Fuel Your Fire

NFI NATIONAL FIREPLACE INSTITUTE A CERTIFICATION AGENCY

WARNING! Risk of Fire and/or Asphyxiation!

- Read all the instructions before starting the installation. Follow these instructions carefully during the installation to ensure maximum safety and benefit.
- Comply with all minimum clearances to combustibles as specified. Failure to comply may cause house fire.

⚠ WARNING

HOT SURFACES!
Glass and other surfaces are hot during operation AND cool down.

Hot glass will cause burns.
- **DO NOT** touch glass until it is cooled
- NEVER allow children to touch glass
- Keep children away

- CAREFULLY SUPERVISE children in same room as fireplace.
- Alert children and adults to hazards of high temperatures.

High temperatures may ignite clothing or other flammable materials.
- Keep clothing, furniture, draperies and other flammable materials away.

Safety Alert Key:

- ***DANGER!*** Indicates a hazardous situation which, if not avoided will result in death or serious injury.
- ***WARNING!*** Indicates a hazardous situation which, if not avoided could result in death or serious injury.
- ***CAUTION!*** Indicates a hazardous situation which, if not avoided, could result in minor or moderate injury.
- ***NOTICE:*** Indicates practices which may cause damage to the fireplace or to property.

Table of Contents

1 Product Specific & Important Safety Information
- A. Appliance Safety Certification 4
- B. Appliance Emissions Certification 4
- C. BTU Efficiency Specifications 4
- D. Mobile Home Approved 4
- E. Glass Specifications 5
- F. Non-Combustible Materials 5
- G. Combustible Materials 5
- H. Electrical Codes 5

2 Getting Started
- A. Typical Fireplace System 6
- B. Design and Installation Considerations 7
  - 1. Selecting Fireplace Locations 7
  - 2. Locating Fireplace & Chimney 8
- C. Tools and Supplies Needed 9
- D. Inspect Fireplace and Components 9
- E. Fireplace System Requirements 9
- F. Lower Access Panel Removal and Installation 9

3 Framing and Clearances
- A. Appliance Dimensions/Weight 10
- B. Clearances 11
- C. Construct the Chase 12
- D. Frame the Fireplace 12
- E. Secure and Level the Fireplace 13
- F. Installation of Top Standoffs 14
- G. Protective Metal Hearth Strips 14
- H. Non-Combustible Facing Board (Provided) 15
- I. Outside Air Kit 15
- J. Heat-Zone-WD-C Kit (Optional) 18

4 Electrical Wiring 22

5 Chimney and Termination Requirements
- A. Chimney Requirements 23
- B. Offsets/Returns 24
- C. Termination Requirements 25

6 Chimney Installation
- A. Typical Chimney System 26
- B. Assemble Chimney Sections 27
- C. Install Chimney Air kit (CAK4A) 27
- D. Secure Offset/Return 28
- E. Install Firestops 29
- F. Install Attic Insulation Shield 30
- G. Roof Penetration 31
- H. Manufactured Home Installation 31
- I. Install Chase/Chase Top 32
- J. Install Termination Cap 33

7 Shrouds
- A. Radiation Shield 35
- B. Field Constructed Shrouds 35
  - 1. Open Top Shroud 35
  - 2. Mailbox Style Shroud 36
  - 3. Roofed Style Shroud 36

8 Finishing
- A. Template 37
- B. Finish the Wall 37
  - 1. Stone, Brick Finish 37
  - 2. Tile, Granite, Marble Finish 38
- ▶ C. Mantel and Wall Projections 38
- D. Finishing the Hearth Extension 39
- E. Non-Combustible Sealant Material 40

9 Fireplace Setup
- A. Firebrick Placement 41
- B. Baffle and Blanket Placement 42
- C. Install Fascia (Fronts) 42

10 Reference Materials
- A. Chimney Components 43
- B. Accessories 47
- C. Offset Diagrams 48

ATTENTION INSTALLER:

Follow this Standard Work Checklist

This standard work checklist is to be used by the installer in conjuction with, not instead of, the instructions contained in this installation manual.

Customer: _____
Lot/Address _____
_____
_____

Model: WARMMAJIC-D

Date Installed: _____
Location of Fireplace: _____
Installer: _____
Dealer/Distributor Phone # _____
Serial #: _____

WARNING! Risk of Fire or Explosion! *Failure to install fireplace acording to these instructions can lead to a fire or explosion.*

Fireplace Install Section 3 (page 10-21)	**YES**	**IF NO, WHY?**
Verified that the chase is insulated and sealed.	☐	
Required top standoffs installed.	☐	
Required non-combustible board is installed.	☐	
Verified clearances to combustibles.	☐	
Fireplace is leveled and secured.	☐	
Hearth extension size/height decided.	☐	
Outside air kit installed.	☐	
Optional Heat Zone has been installed by a qualified service technician.	☐	

Chimney Section 5 & 6 (page 23-34)		
Chimney configuration complies with diagrams.	☐	
Chimney installed, locked and secured in place with proper clearance.	☐	
Chimney air kit installed.	☐	
Firestops installed.	☐	
Attic insulation shields installed.	☐	
Roof flashing installed and sealed.	☐	
Terminations installed and sealed.	☐	

Electrical Section 4 (page 22)		
Switch wires properly installed.	☐	

Finishing Section 7 (page 35-38)		
Combustible materials not installed in non-combustible areas.	☐	
Verified all clearances meet installation manual requirements.	☐	
Mantels and wall projections comply with installation manual requirements.	☐	
Protective hearth strips and hearth extension installed per manual requirements.	☐	

Fireplace Setup Section 8 (page 39-40)		
All packaging and protective materials removed.	☐	
Firebrick, baffle and ceramic blanket installed correctly.	☐	
Facia and doors properly installed.	☐	
Manual bag and all of its contents are removed from inside/under the fireplace and given to the party responsible for use and operation.	☐	
All packaging materials are removed from inside/under the fireplace.	☐	

Hearth & Home Technologies recommends the following:

- Photographing the installation and copying this checklist for your file.
- That this checklist remain visible at all times on the fireplace until the installation is complete.

Comments: Further description of the issues, who is responsible (Installer/Builder/Other Trades, etc.) and corrective action needed:

_____
_____
_____

Comments communicated to party responsible _____ by _____ on _____
(Builder/Gen. Contractor) (Installer) (Date)

Part # 4188-982 • Rev C • 3/25

1 Product Specific & Important Safety Information

A. Appliance Safety Certification

Model:	WARMMAJIC-D
Laboratory:	Underwriter's Laboratories, Inc.
Report No:	Project 4789042842
Type:	Wood Fireplace
Standard:	UL127-2011 and CAN/ULC-S610-2018 (A1998) and (UM) 84-HUD, Manufactured Home Approved.

B. Appliance Emissions Certification

Model:	WARMMAJIC-D
Laboratory:	PFS TECO
Report No:	24-321
Standard:	EPA Method 28R, ASTM E2515, ASTM E2780 and CSA B415.1
Can be found at: www.fireplaces.com/shopping-tools/epa-certifications	

C. BTU & Efficiency Specifications

EPA Certified Emissions:	1.7 g/hr
*LHV Tested Efficiency:	73%
**HHV Tested Efficiency:	69%
***EPA BTU Output:	20,900 BTU/hr
****Peak BTU/Hour Output:	81,000 BTU/hr
Vent Size:	8 inches
Firebox Size:	2.75 cubic feet
Recommended Log Length:	22 inches
Fuel	Seasoned Cord Wood less than 20% moisture
HHT:	SL300 Series
DuraVent:	DuraPlus

*Weighted average LHV (Low Heating Value) efficiency using crib wood and data collected during EPA emission test. LHV assumes the moisture is already in a vapor state so there is no loss in energy to vaporize.

**Weighted average HHV (High Heating Value) efficiency using crib wood and data collected during EPA emission test. HHV includes the energy required to vaporize the water in the fuel.

***BTU outputs based on HHV (High Heating Value) and the burn rate from EPA tests using crib wood.

****A peak BTU out of the appliance calculated using the maximum first hour burn rate from the High EPA Test and BTU content of seasoned cordwood (8600) times the efficiency.

WARMMAJIC-D are Certified to comply with 2020 particulate emission standards.

The WARMMAJIC-D Wood Appliances meet the U.S. ENVIRONMENTAL PROTECTION AGENCY Certified to comply with 2020 particulate emission standards using crib wood.

This wood heater needs periodic inspection and repair for proper operation. It is against federal regulations to operate this wood heater in a manner inconsistent with operating instructions in this manual.

D. Mobile Home Approved

This appliance is approved for mobile home installations when not installed in a sleeping room and when an outside combustion air inlet is provided. The structural integrity of the mobile home floor, ceiling, and walls must be maintained. The appliance must be properly grounded to the frame of the mobile home and use only listed double-wall connector pipe.

E. Glass Specifications

This appliance is equipped with 5mm ceramic glass. Replace glass only with 5mm ceramic glass. Please contact your dealer for replacement glass.

NOTE: This installation must conform with local codes. In the absence of local codes you must comply with the **UL127-2011, (UM) 84-HUD and NPFA211** in the U.S.A. and the CAN/**ULC S610-2018 (A1998) and CAN/CSA-B365 Installation Codes** in Canada.

DO NOT:

- *install or operate damaged fireplace*
- *modify fireplace*
- *install other than as instructed by Hearth & Home Technologies*
- *operate the fireplace without fully assembling all components*
- *install unvented gas log set*
- *install any component not approved by Hearth & Home Technologies*
- *install parts or components not Listed or approved*

Improper installation, adjustment, alteration, service or maintenance can cause injury or property damage. For assistance or additional information, consult a qualified installer, service agency or your dealer.

***WARNING! Risk of Fire!** Hearth & Home Technologies disclaims any responsibility for, and the warranty and agency listing will be voided by the above actions.*

Hearth & Home Technologies WILL NOT warranty appliances that exhibit evidence of over-firing. Evidence of over-firing includes, but is not limited to:

- Warped air tube
- Deteriorated refractory brick retainers
- Deteriorated baffle and other interior components

F. Non-Combustible Materials

Material which will not ignite and burn, composed of any combination of the following:

- Steel
- Brick
- Concrete
- Glass
- Plaster
- Iron
- Tile
- Slate

Materials reported as passing **ASTM E 136, Standard Test Method for Behavior of Metals, in a Vertical Tube Furnace of 750° C.**

G. Combustible Materials

Material made of or surfaced with any of the following materials:

- Wood
- Plant Fibers
- Plywood/OSB
- Compressed Paper
- Plastic
- Sheet Rock (drywall)
- Foam insulation & sealants

Any material that can ignite and burn: flame proofed or not, plastered or un-plastered.

H. Electrical Codes

NOTICE: *This fireplace must be electrically wired and grounded in accordance with local codes or, in the absence of local codes, with* **National Electric Code ANSI/ NFPA 70-latest edition** *or the* **Canadian Electric Code CSA C22.1.**

- A 110-120 VAC circuit for this product must be protected with ground-fault circuit-interrupter protection, in compliance with the applicable electrical codes, when it is installed in damp locations.

WARNING! *Improper installation, adjustment, alteration, service or maintenance can cause injury or property damage.*

2 Getting Started

A. Typical Fireplace System

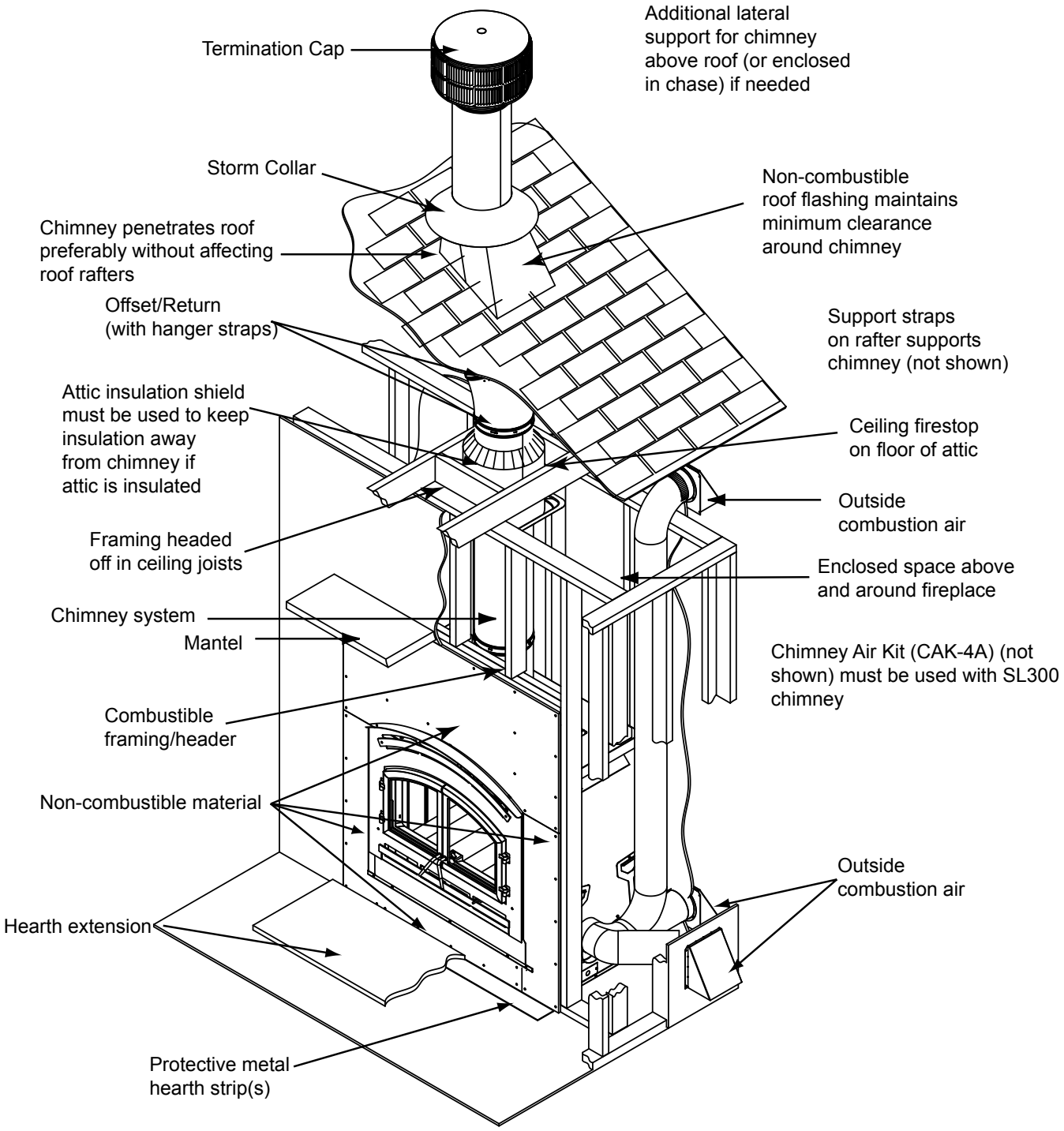

Figure 2.1 Typical Fireplace System

B. Design and Installation Considerations

NOTICE: *Check building codes prior to installation.*

- Installation MUST comply with local, regional, state and national codes and regulations.
- Consult insurance carrier, local building inspector, fire officials or authorities having jurisdiction over restrictions, installation inspection and permits.

1. Selecting Fireplace Locations

This fireplace may be used as a room divider, installed along a wall, across a corner or used in an exterior chase. See Figure 2.2.

Locating the fireplace in a basement, near frequently opened doors, central heat outlets or returns, or other locations of considerable air movement can affect the performance.

Outside air must be used for combustion. The WARMMAJIC-D comes equipped with an outside air inlet to feed combustion air from outside the home, along with an outside air termination cap; the metal duct is required but not supplied. Consideration should be given to these factors before deciding on a location.

NOTICE: *In addition to these framing dimensions, also reference the following section:*

- *Clearances (Section 3).*

NOTICE:

- *Illustrations and photos reflect typical installations and are FOR DESIGN PURPOSES ONLY.*
- *Illustrations/diagrams are not drawn to scale.*
- *Actual installation/appearance may vary due to individual design preference.*
- *Hearth & Home Technologies reserves the right to alter its products.*

NOTICE:

A minimum 1/2 in. air clearance at the back and a minimum 1 in. air clearance to the sides of the fireplace assembly must be maintained.

Chimney sections at any level require a 2 in. minimum air space clearance between the framing and chimney sections.

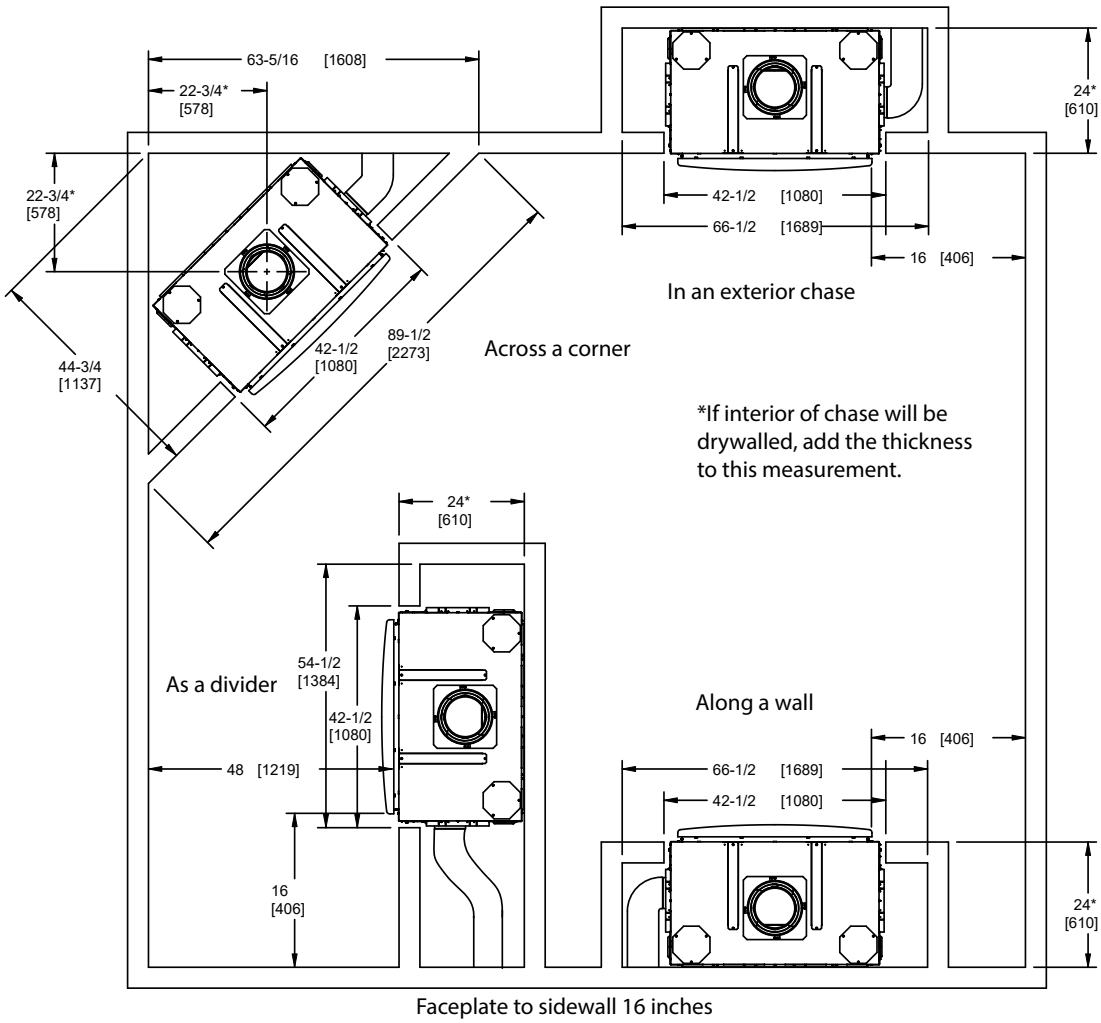

Figure 2.2 Fireplace Locations

2. Locating Fireplace & Chimney

Location of the fireplace and chimney will affect performance.

- Install within the warm airspace enclosed by the building envelope. This helps to produce more draft, especially during lighting and die-down of the fire.
- Penetrate the highest part of the roof. This minimizes the effects of wind loading.
- Locate termination cap away from trees, adjacent structures, uneven roof lines and other obstructions.
- Minimize the use of chimney offsets.
- Consider the fireplace location relative to floor and ceiling and attic joists.
- Take into consideration the termination requirements in Sections 5 and 6.
- Install the outside air kit and CAK (chimney air kit) with the intake facing prevailing winds during the heating season.
- Ensure adequate outdoor air for <u>all</u> combustion appliances and exhaust equipment.
- Ensure furnace and air conditioning return vents are not located in the immediate vicinity of the fireplace.
- Avoid installing the fireplace near doors, walkways or small isolated spaces.
- Recessed lighting should be a “sealed can” design.
- Attic hatches weather stripped or sealed.
- Attic mounted duct work and air handler joints and seams taped or sealed.

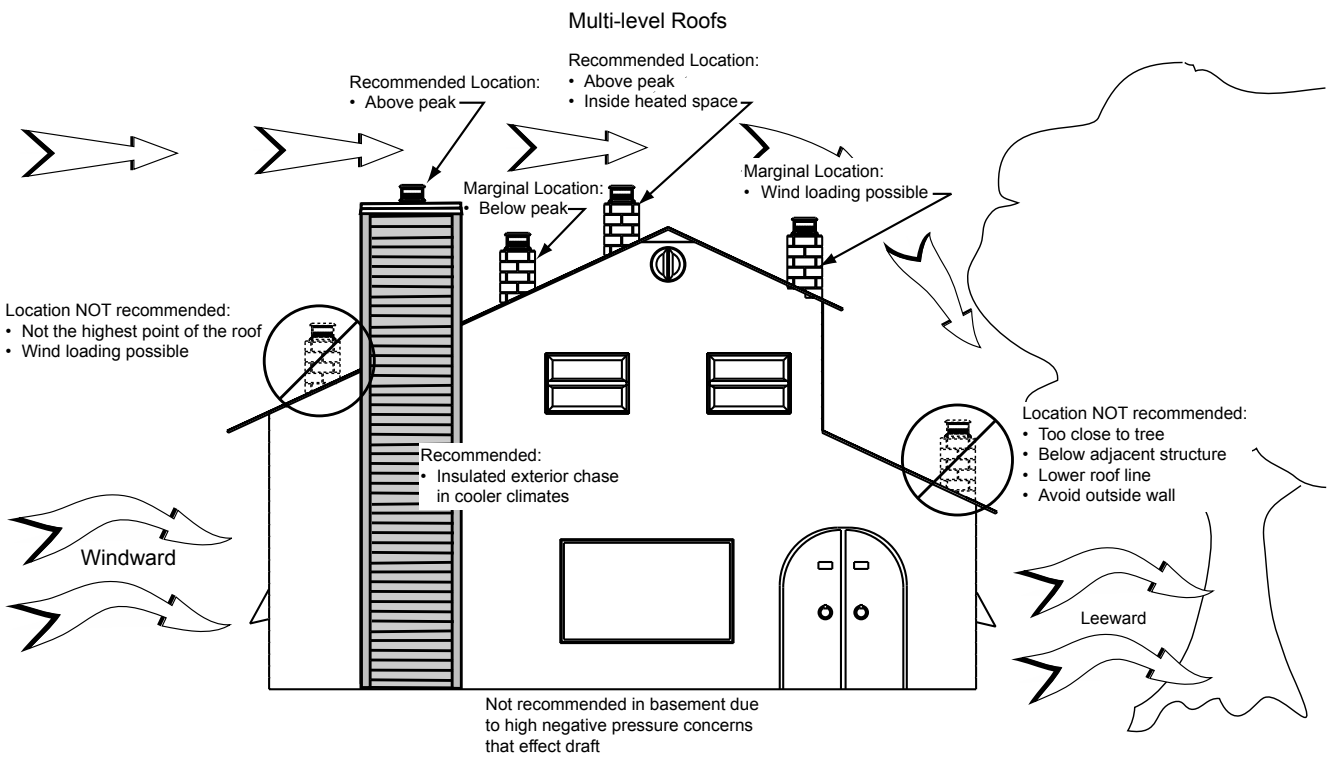

Figure 2.3 Recommended Chimney Locations

C. Tools and Supplies Needed

Before beginning the installation be sure the following tools and building supplies are available:

Reciprocating saw	Framing material
Pliers	Misc. screws and nails
Hammer	Gloves
Phillips screwdriver	Framing square
Flat blade screwdriver	Electric drill and bits
Plumb line	Safety glasses
Level	Tape measure

1/2-3/4 in. length, #6 or #8 self-drilling screws

Non-combustible 300° silicone sealant

D. Inspect Fireplace and Components

WARNING! Risk of Fire and Asphyxiation! *Damaged parts could impair safe operation.* ***DO NOT*** *install damaged, incomplete or substitute components.*

- Remove fireplace and components from packaging and inspect for damage.
- Chimney system components and other optional components are shipped separately.
- Report to your dealer any parts damaged in shipment.

E. Fireplace System Requirements

The Majestic fireplace system requirements consist of the following:

- Fireplace
  - Firebrick (included with fireplace)
  - Door (included with fireplace)
  - Non-combustible facing material (included with fireplace)
  - Hearth Extension
  - Metal Hearth Strips (included with fireplace)
- Outside Air System (hood and collars included with fireplace)
- Fascia
- Chimney System
  - CAK4A Chimney air kit (included with fireplace, required with SL300 series chimney)
  - Attic Insulation Shield (included with fireplace)
  - Chimney termination cap
- Non-combustible finish material
- Fans (included with fireplace)

Optional components include:

- LINTEL BAR-HHT - Lintel Bar Kit
- Heat-Zone-WD-C Kit
- OA-RD-6 - Outside Air Offset Adapter
- Mesh-HHT-C - Firescreen

F. Lower Access Panel Removal and Installation

The lower access panel comes attached to the fireplace for shipping purposes only.

1. While holding on to the access panel, remove the screws on each end. See Figure 2.4.
2. Remove the two (2) shipping brackets and discard them. See Figure 2.5.
3. Hang the lower access panel on the fireplace so that it rests on the screw pins on each end.

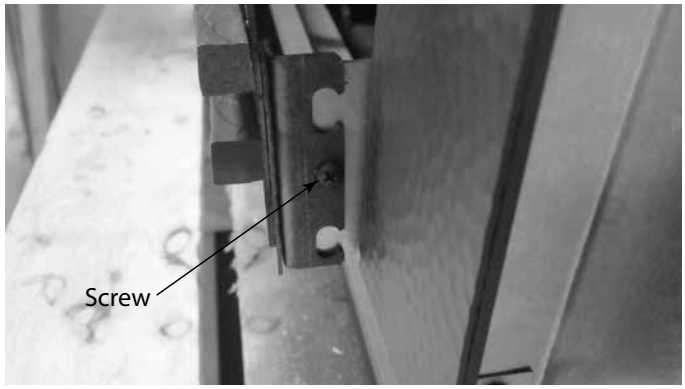

Figure 2.4 Remove Screws

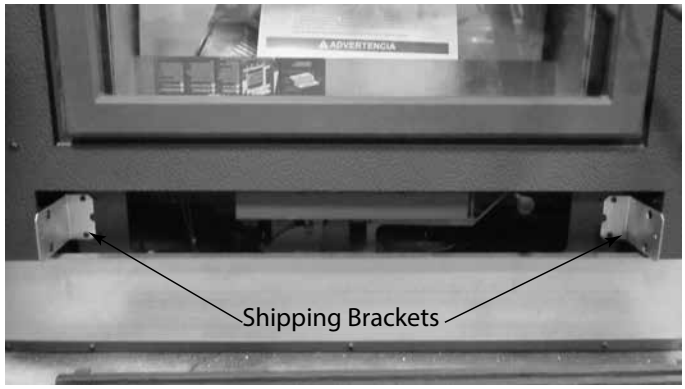

Figure 2.5 Remove Shipping Brackets

3 Framing and Clearances

A. Appliance Dimensions/Weight

Appliance Weight Table

Model	Pounds
WARMMAJIC-D	605

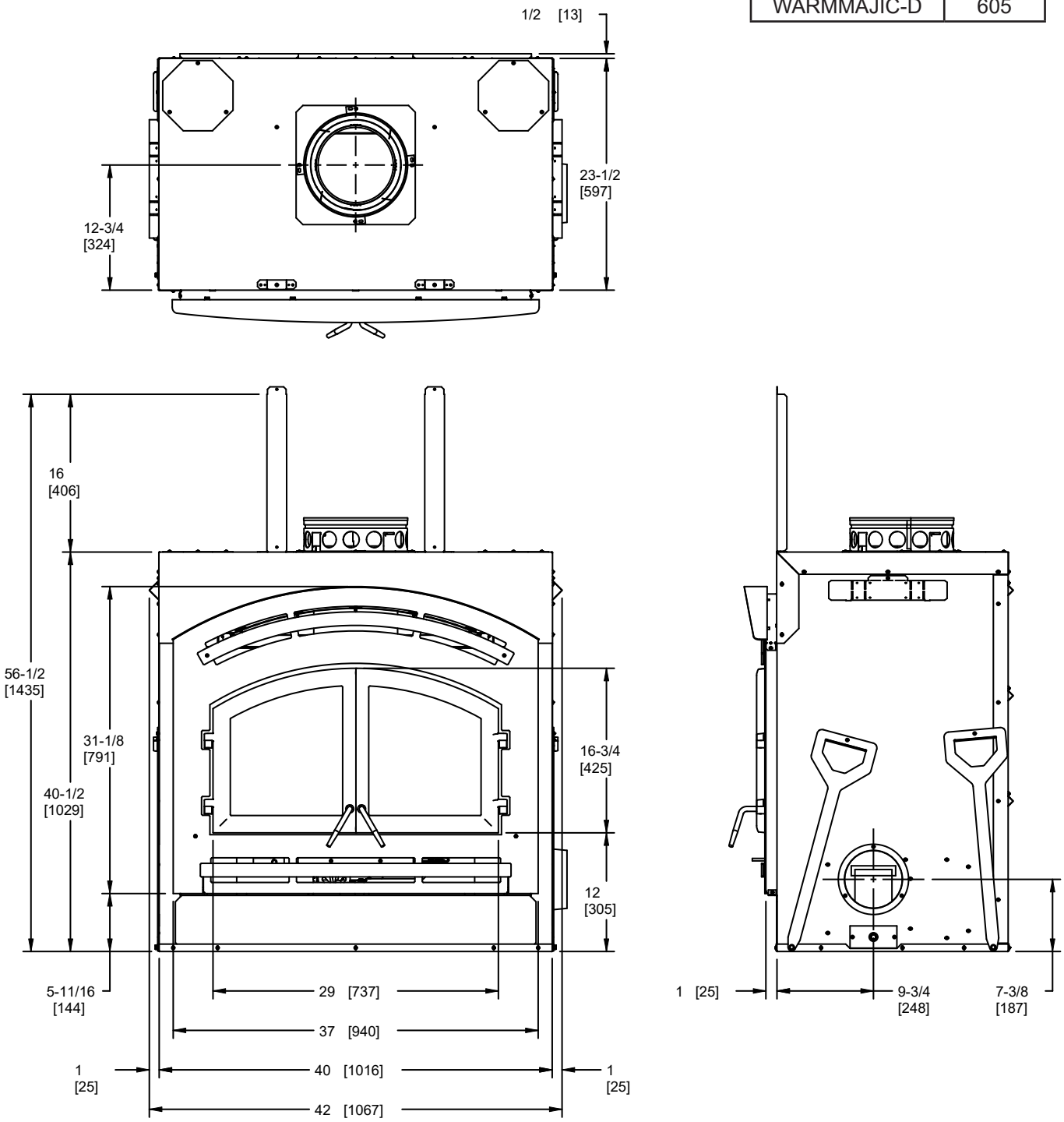

Figure 3.1 Appliance Dimensions

B. Clearances

WARNING! Risk of Fire!

You must comply with all minimum air space clearances to combustibles as specified in Figure 3.2. ***DO NOT*** *pack required air spaces with insulation or other materials. Framing or finishing material used on the front of, or in front of the fireplace closer than the minimums listed must be constructed entirely of non-combustible materials (i.e., steel studs, concrete board, etc.). Failure to comply may cause fire.*

WITHIN ENCLOSURE AREA	
Fireplace to backwall	1/2 in. (13 mm)
Fireplace to sidewall	1 in. (25 mm)
Duct boots to framing	0 in. (0 mm)
Top of fireplace to header	16 in. (406 mm)
Door opening to sidewall	22-3/4 in. (578 mm)
EXPOSED SURFACES	
Faceplate to sidewall	16 in. (406 mm)
Heat zone air grills to ceiling	12 in. (305 mm)
MANTEL	
Non-combustible mantel	38 in. (965 mm) from the base of the fireplace up
Combustible mantel	60 in. (1524 mm) from the base of the fireplace up
Maximum mantel depth	12 in. (305 mm)

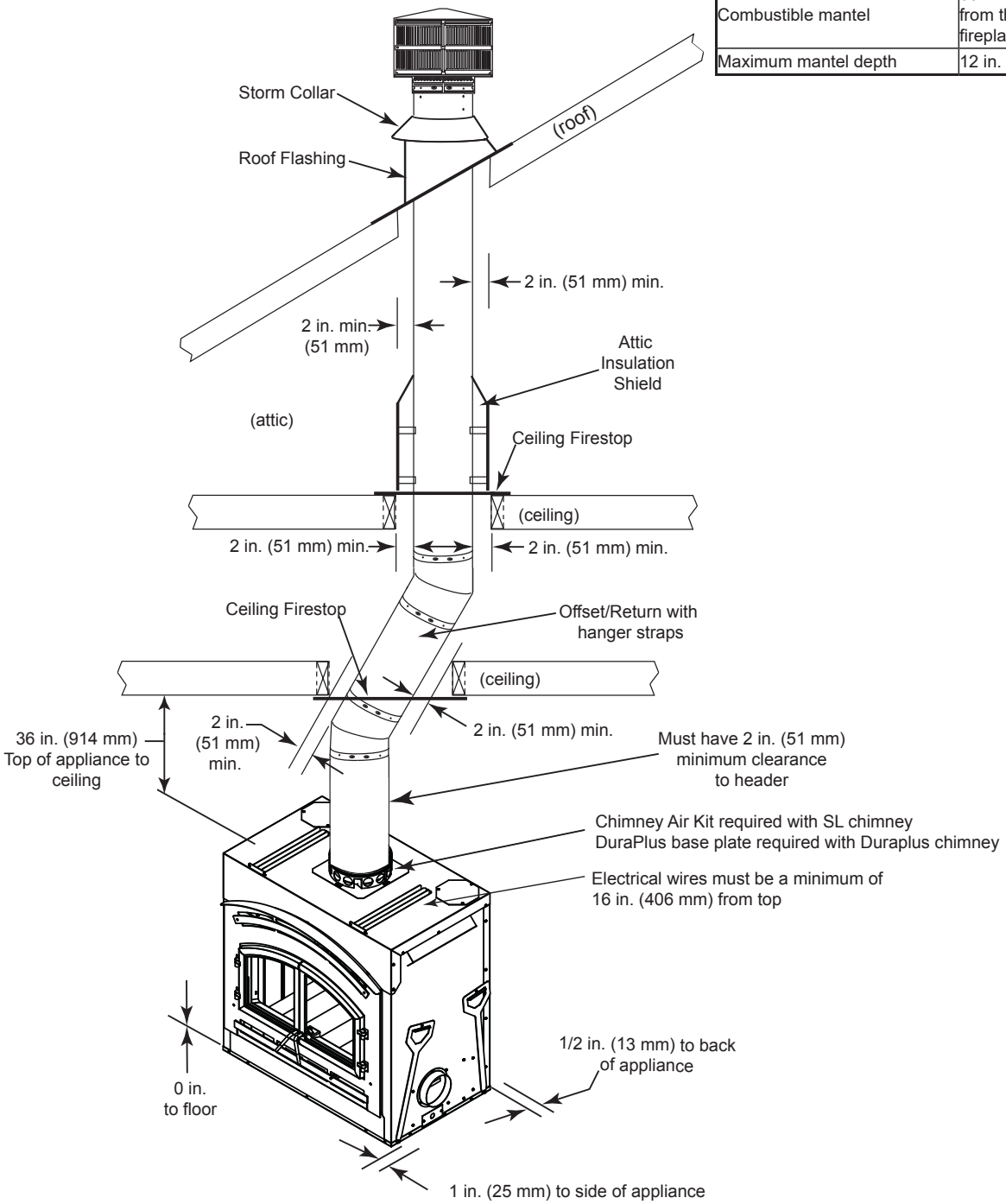

Figure 3.2 Clearances to Combustible Materials

C. Construct the Chase

***WARNING! Risk of Fire! DO NOT** seal area between fire stop opening and chimney pipe except where they enter the attic or leave the warm air envelope of the home (use 600° F sealant).*

***WARNING! Risk of Fire!** You must maintain a minimum 2 in. (51 mm) air space clearance to insulation and framing surrounding the chimney system.*

A chase is a vertical boxlike structure built to enclose the fireplace and/or its vent system. Vertical chimneys that run on the outside of a building must be installed inside a chase. See Figure 3.4.

Construction of the chase may vary with the type of building. Local building codes MUST be followed.

Hearth & Home Technologies recommends:

- The inside surfaces be drywalled and taped (or the use of an equivalent method) for maximum air tightness to the false ceiling.
- In cold climates, the walls of the chase should be insulated to the level of the false ceiling as shown in Figure 3.3. This will help reduce heat loss from the home around the fireplace.
- Holes and other openings should be caulked with high temperature caulk or stuffed with unfaced fiber glass insulation.

- Requirements for constructing the chase:
  - A firestop spacer and attic insulation shield should be installed at the false ceiling.
  - The chase must be properly blocked to prevent blown insulation or other combustibles from entering and making contact with fireplace or chimney.
  - The chase top must be constructed of non-combustible material.

- The chase is constructed using framing materials much the same as the walls in your home. A variety of siding materials may be used including brick, stone, veneer brick, or standard siding materials.
- In constructing the chase, several factors must be considered:
  - Maintain a 2 in. (51 mm) air space around the chimney.
  - The chase top must be constructed of non-combustible material.
  - In cold climates, a firestop spacer and attic insulation shield should be installed in an insulated false ceiling at the 8 ft. (2438 mm) level above the fireplace assembly. This reduces heat loss through the chase.
  - In cold climates, the walls of the chase should be insulated to the level of the false ceiling as shown in Figure 3.4. This will help reduce heat loss from the home around the fireplace.

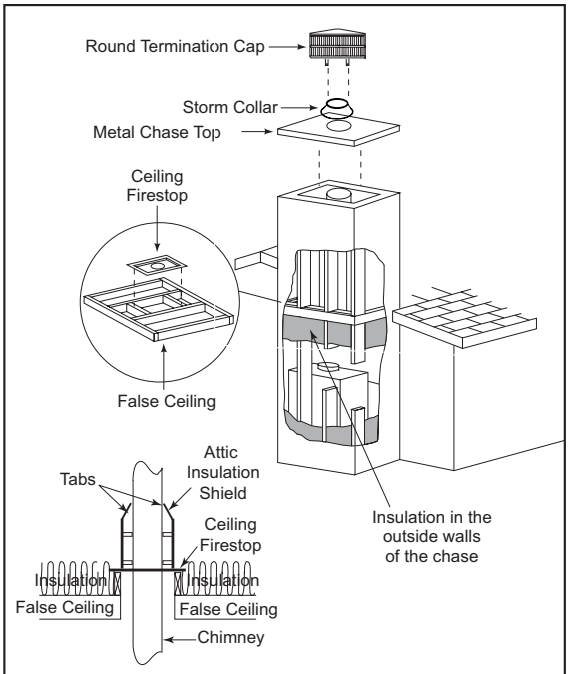

Figure 3.3 Chase Assembly

Three examples of chase applications are shown in Figure 3.4.

1. Fireplace and chimney enclosed in an exterior chase.
2. Chimney offset through exterior wall and enclosed in chase. See Section 9.C for additional offset diagrams.
3. Chase constructed on roof.

All outside walls should be insulated.

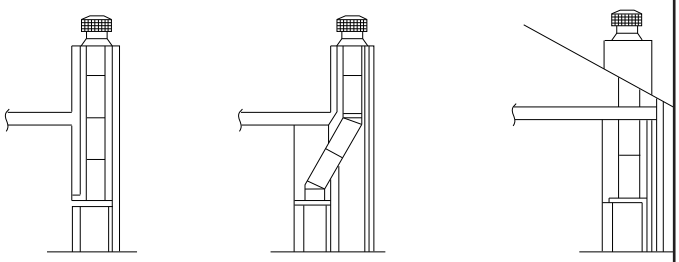

Figure 3.4 Chase Constructions

D. Frame the Fireplace

***WARNING! Risk of Fire!** Comply with all minimum clearances specified.*

- *A minimum 1/2 in. (13 mm) air clearance must be maintained at the back and 1 in. (25 mm) to the sides of the fireplace assembly.*
- *Chimney sections at any level require a 2 in. (51 mm) minimum air space clearance between the framing and chimney section.*

***WARNING! Risk of Fire!** You must comply with all minimum air space clearances to combustibles. **DO NOT** pack required air spaces with insulation or other materials.*

NOTICE: Hearth extension design must be determined before installation of fireplace.

If the fireplace is placed on the floor, the maximum height of a finished raised hearth (constructed of non-combustible material) is 5-3/4 in. (147 mm). If a higher raised hearth is preferred, the fireplace must be placed on a platform.

NOTICE: Wiring for fans must be done before framed enclosure is completed. If using the Heat-Zone-WD-C Kit, it also must be installed before enclosure is complete.

Standoffs are attached to the fireplace.

NOTE: Before framing up the chase, consider where and how the chimney will run. If there are obstacles that might be in the way, it maybe necessary to make the chase larger than shown to allow for offsets to be used. Refer to offset chart on page 24.

The unit can be positioned with the standoffs touching combustible walls or framing but DO NOT pack insulation or other materials in the air space between the fireplace and wall.

Figure 3.5 shows a typical framing (using 2 x 4 lumber) of the fireplace, assuming combustible materials are used. All required clearances to combustibles around the fireplace must be adhered to. See Figure 3.2. (No recess above fireplace.)

The finished cavity depth must be no less than 24 in. (610 mm) from the finished back wall to the outside of front wall framing. Framing must extend straight up all the way to the ceiling.

CAUTION! *Risk of Cuts/Abrasions. Wear protective gloves and safety glasses during installation. Sheet metal edges are sharp.*

NOTE: Before framing up the chase, consider where and how the chimney will run. If there are obstacles that might be in the way, it may be necessary to make the chase larger than shown to allow for offsets to be used. Refer to offset chart on page 24 if needed.

E. Secure and Level the Fireplace

This fireplace may be placed on either a combustible or noncombustible continuous flat surface. Follow the instructions for framing in Section 3. Slide the fireplace into position. Be sure to provide the minimum 1 in. air clearance at the sides and 1/2 in. at the back of the fireplace.

The fireplace should be positioned so the face of the noncombustible material on the fireplace will be flush with the face of the drywall on the walls. See Figure 3.6.

Level the fireplace and shim as necessary. Secure the fireplace (using the pallet mounting brackets located on either side of the fireplace) to the sub floor.

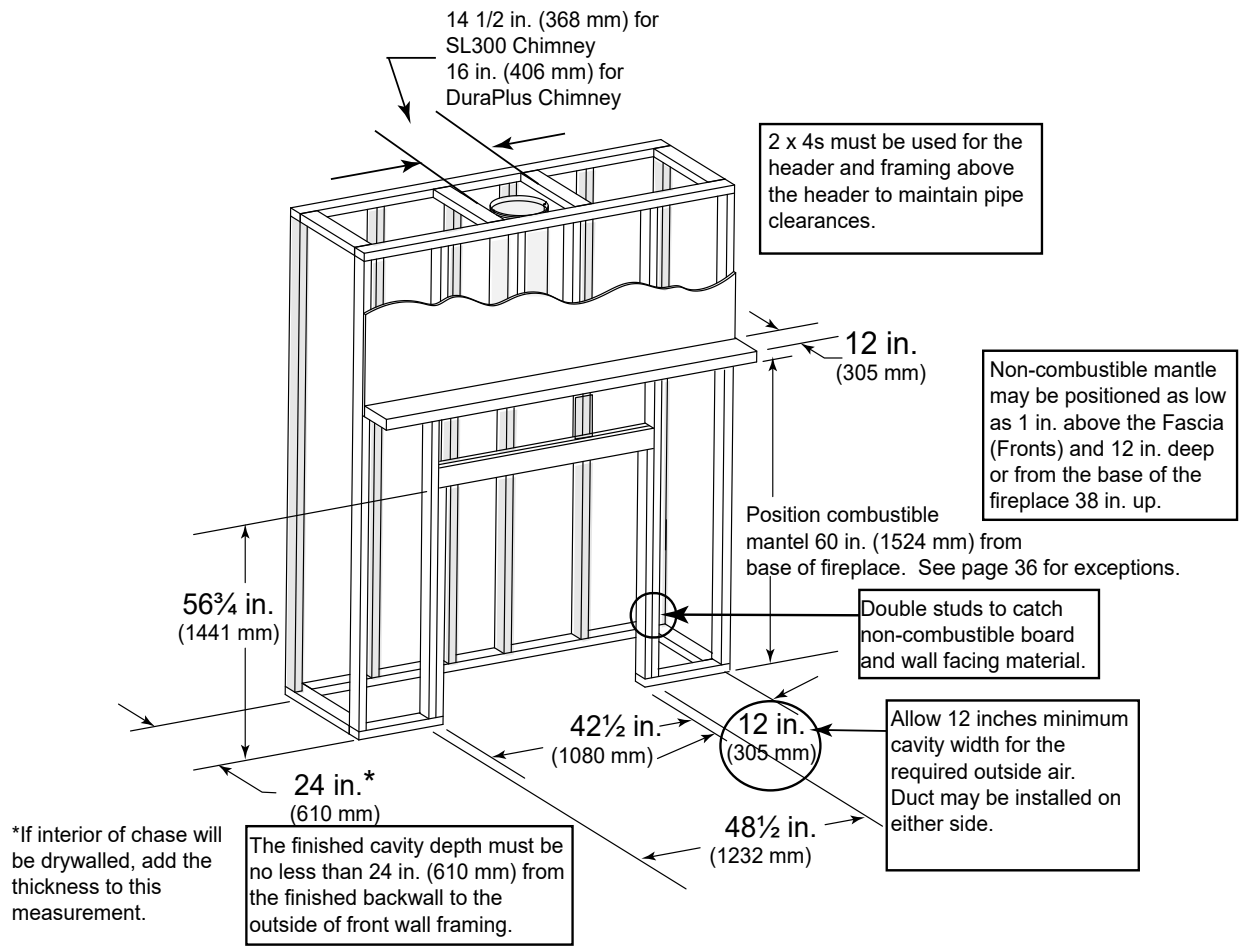

Figure 3.5 Framing the Fireplace

WARNING! Risk of Fire! *Prevent contact with sagging, loose insulation.*

- ***DO NOT*** *install against vapor barriers or exposed insulation.*
- *Secure insulation and vapor barriers.*
- *Provide minimum air space clearances at the sides and back of the fireplace assembly as outlined in Section 3.*

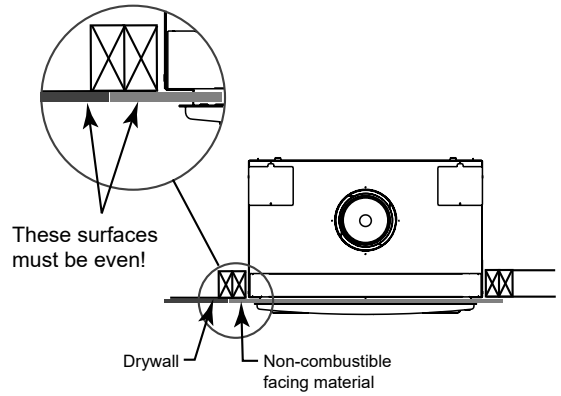

Figure 3.6 Drywall - Non-combustible Facing Material

F. Installation of Top Standoffs

Remove the top front standoffs from the top of the fireplace. See Figure 3.7. Screw the standoffs to the fireplace as shown in Figure 3.8. The top of the standoffs will be screwed to the header.

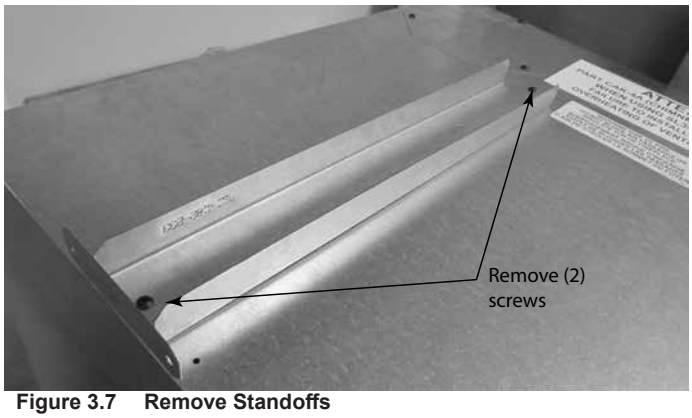

Figure 3.7 Remove Standoffs

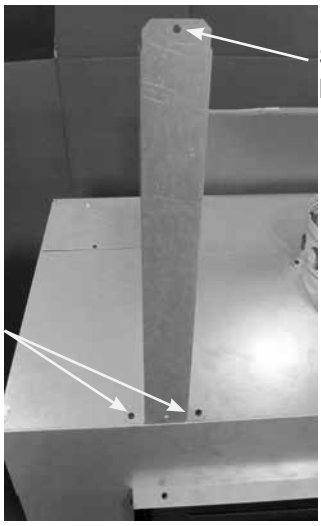

Figure 3.8 Screw Standoffs to Fireplace

G. Protective Metal Hearth Strips

WARNING! Risk of fire! *High temperatures, sparks, embers or other burning material falling from the fireplace may ignite flooring or concealed combustible surfaces.*

- *Protective metal hearth strips MUST be installed over combustible surfaces.*
- *Hearth extensions MUST be installed exactly as specified.*
- Locate the two protective metal hearth strips measuring approximately 26 in. x 4 in. (660 mm x 102 mm) included with this fireplace.
- Slide each metal strip 2 in. (51 mm) under front edge of fireplace.
- Overlap strips in the middle of fireplace opening by 1 in.-(25 mm) minimum.
- Metal strips must extend beyond the front and sides of the fireplace opening by at least 2 in. (51 mm). See Figure 3.9.
- Protect the front of a platform elevated above the hearth extension with metal strips (not included with fireplace) per Figure 3.10. See Section 7 for hearth extension instructions.
- *DO NOT cover metal strips with combustible materials. Sparks or embers may ignite flooring.*

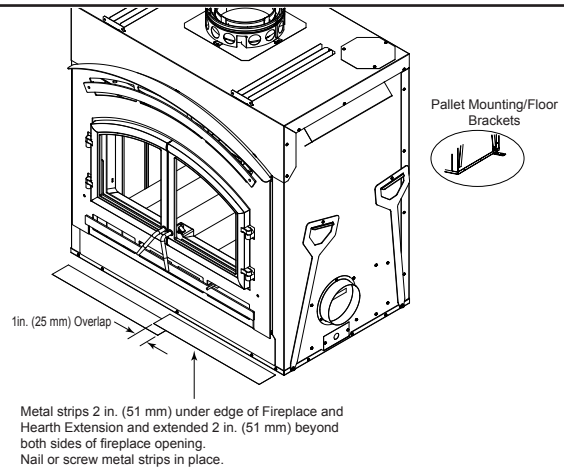

Figure 3.9 Position the Protective Metal Hearth Strips

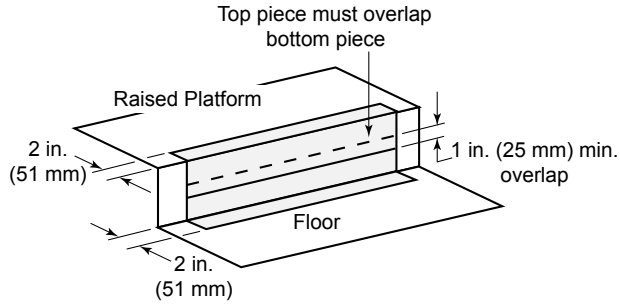

Figure 3.10 Protect the Front of an Elevated Platform

H. Non-Combustible Facing Board (Provided)

WARNING! Risk of Fire!
Follow these instructions exactly.
Facing materials must be installed properly to prevent fire.
No materials may be substituted without authorization by Hearth & Home Technologies.

TOOLS NEEDED: Powered drill with #2 Phillips head bit; caulking gun.

Only non-combustible materials (supplied with fireplace) may be used to cover the metal fireplace front.

> ***NOTE:*** *All boards are pre-drilled for your convenience. Boards MUST be attached in the following order: bottom, sides, and then the top, red-painted side out. The top and bottom board should each have a hang tag attached. Leave them attached for referral for the finishing operation.*

- Attach the bottom board to the bottom of the outer fireplace outer shell with enclosed screws, ensuring the board is centered. **DO NOT remove hang tags**. Attach the side pieces to the outer can and framing members. See Figure 3.11.
- Center and attach the top board to the outer shell and framing members. **DO NOT remove hang tags.**

> ***NOTICE:*** *1/8 in. of the facing material may be visible after finishing materials are applied. This 1/8 in. must be painted or the red will show.*

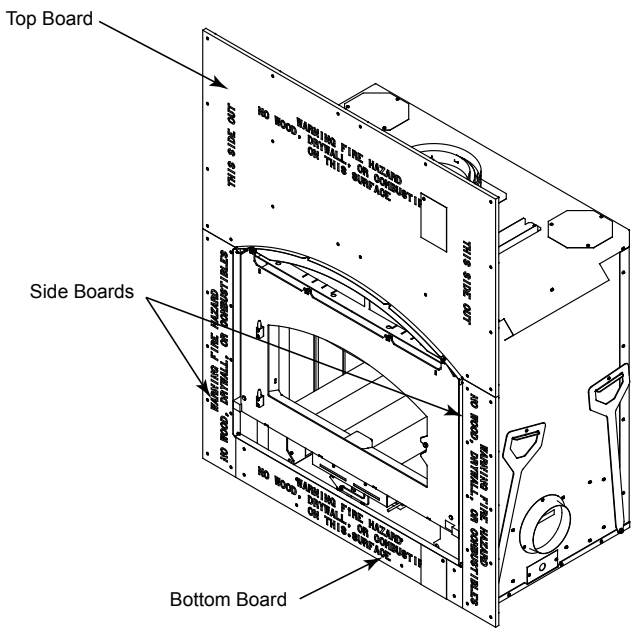

Figure 3.11 Apply Non-combustible Materials

I. Outside Air Kit

An outside air kit must be used for combustion. Hearth & Home Technologies recommends you utilize the shortest duct run and install a P-trap (see Figure 3.18) to optimize the performance of the outside air kit with a maximum length of 40 ft. The outside air inlet hood should be positioned in a manner that will not allow snow, leaves, etc. to block the inlet. In some installations the air duct may need to be run vertically. In such an installation, a 3 ft (914 mm) height difference must be maintained from the top of the uppermost chimney section to the outside air inlet hood.

Refer to Figures 3.19 and 3.20 when placing the outside air inlet hood.

NOTE: The minimum cross-sectional area of the inlet hood is 17.5 square inches.

The outside air kit comes installed on the right hand side of the fireplace but may be moved to the other side by following these steps:

1. Remove outside air collar (Figure 3.12) and the outside air cover plate (Figure 3.13).
2. Install the cover plate on the right side and the collar on the left side.
3. Open and remove the lower access panel.
4. Remove the two (2) outer screws (Figure 3.16) to allow the outside air box to be removed.
5. Pull the outside air box straight out. See Figure 3.17.
6. On the left side, remove the cover plate two (2) screws. See Figure 3.14.
7. Install the cover plate on the right side where the outside air box was and install the outside air box in through the hole on the left side where the cover plate was.

- Cut a 6-1/2 in. (165 mm) hole in outside wall to accommodate air piping.
- Use 6 in. (152 mm) UL181 Class1 or Class 0 rigid or flexible ducting (not supplied) to directly connect outside air to fireplace intake. Insulate the pipe to prevent frost condensation. See Figure 3.18.
- Insulating the pipe isn't required but will help prevent frost condensation.
- Use the supplied outside air inlet hood.
- Seal between the wall and the pipe with silicone to prevent moisture penetration and air leaks.
- Seal between the outside air inlet hood and the house with silicone to prevent air infiltration.

CAUTION! Risk of Fire or Asphyxiation! DO NOT *draw outside combustion air from wall, floor or ceiling cavity, or enclosed spaces such as an attic or garage.*

- ***DO NOT*** *place outside air inlet hood close to exhaust vents or chimneys. Fumes or odor could be drawn into the room through the fireplace.*
- *Locate outside air inlet hood to prevent blockage from leaves, snow/ice, or other debris. Blockages could cause combustion air starvation.*

CAUTION! Risk of Cuts/Abrasions. *Wear protective gloves and safety glasses during installation. Sheet metal edges are sharp.*

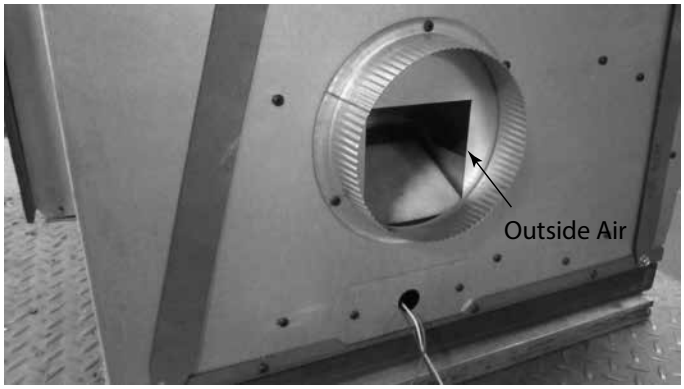

Figure 3.12 Right Side

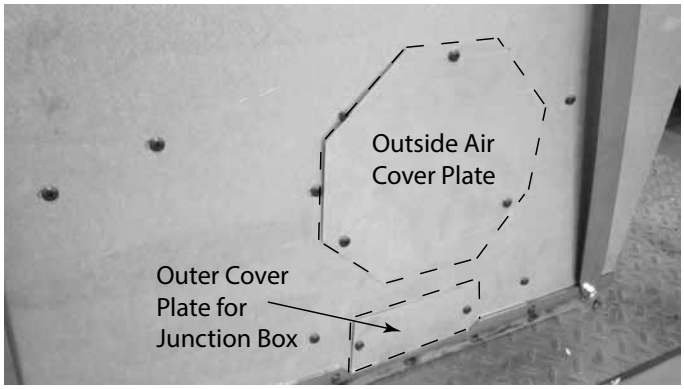

Figure 3.13 Left Side

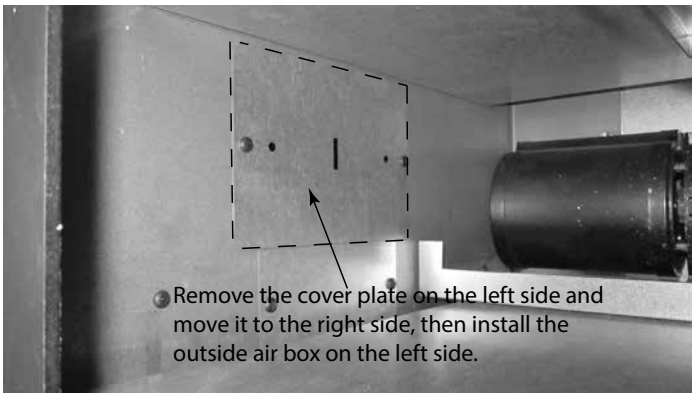

Figure 3.14 Remove Cover Plate (Left Side)

NOTE: An Outside Air Offset Adapter (OA-RD-6) is available if needed. See Figure 3.15.

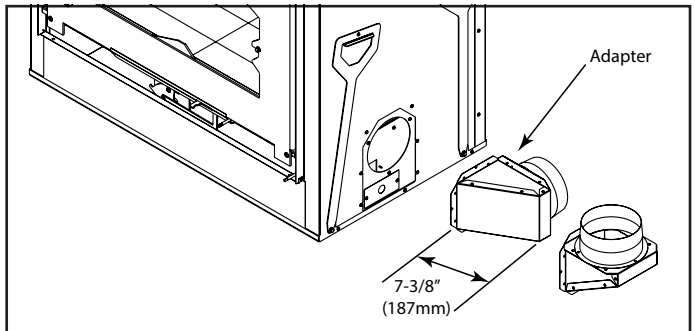

Figure 3.15 Outside Air Offset Adapter

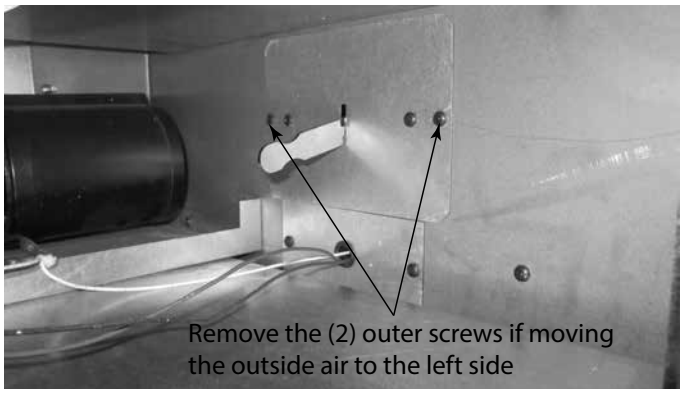

Figure 3.16 Outside air handle shown on right side

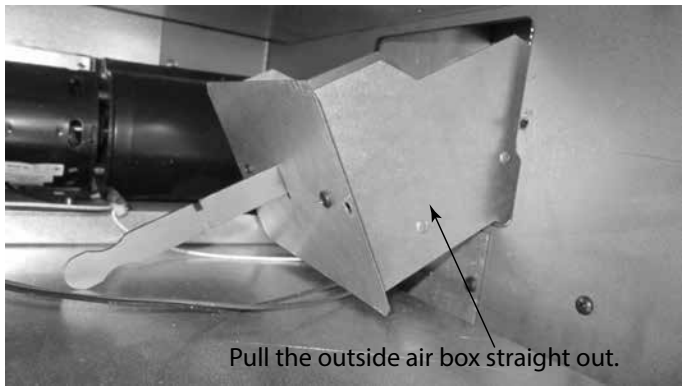

Figure 3.17 Outside Air Box

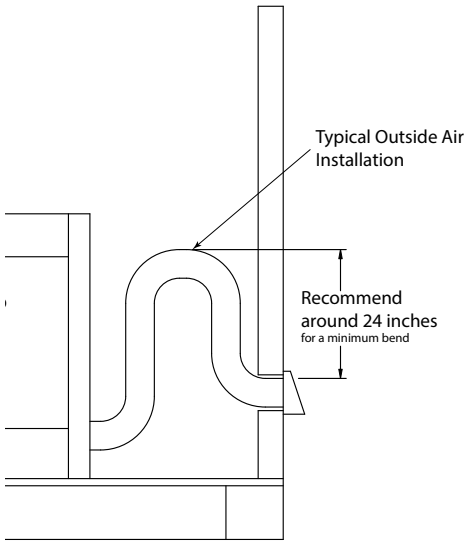

Figure 3.18 Outside Air Installation with Cold Air Trap

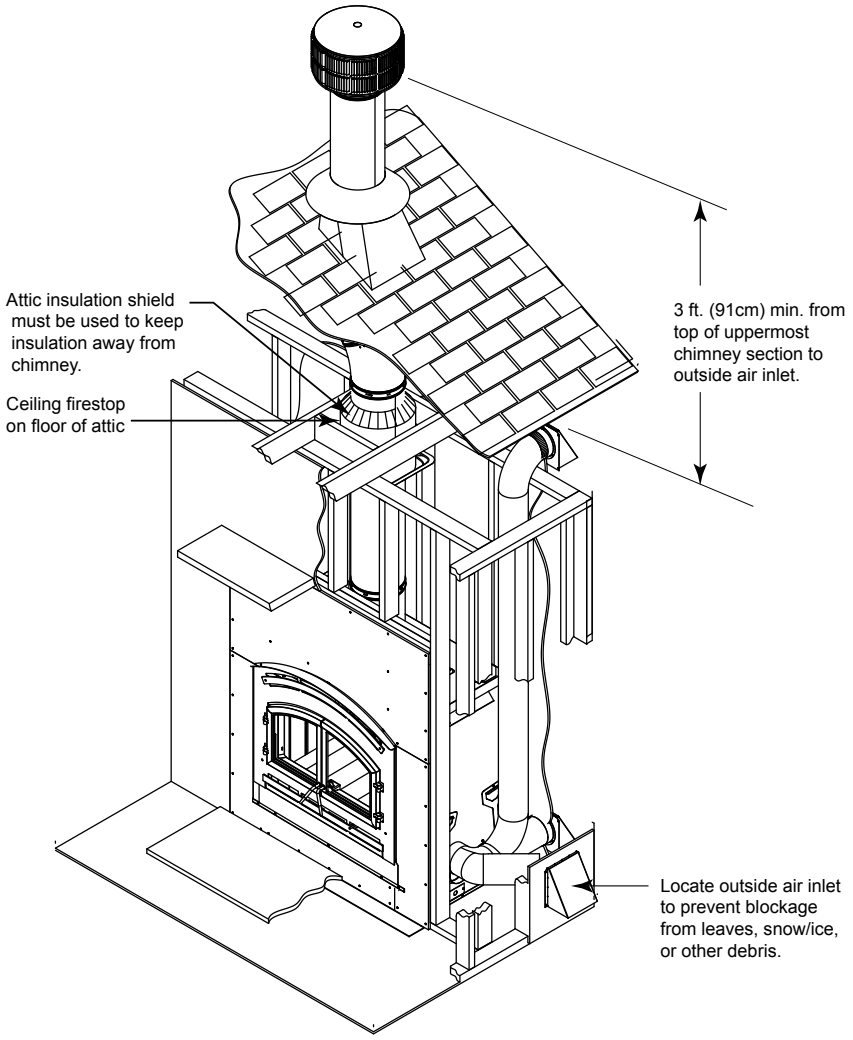

Figure 3.19 Outside Air Inlet Locations

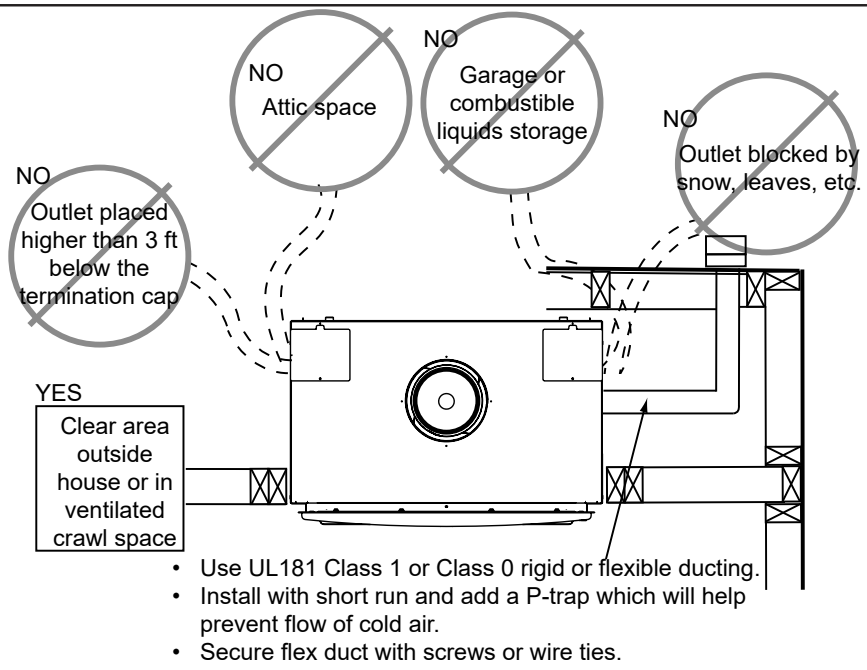

Figure 3.20 Outside Air Installation

J. Heat-Zone-WD-C Kit (Optional)

The Heat-Zone accessory kit conveys warm air from the fireplace through air duct(s) to remote locations in the same room or other rooms of the building. You may install 1 or 2 Heat-Zone kits on the fireplace. Installation of this kit **MUST** be performed by a qualified service technician. If any parts are missing or damaged, contact your local dealer before starting installation. DO NOT install a damaged kit.

This kit is tested and safe when installed in accordance with this installation manual. It is your responsibility to read all instructions before starting installation and to follow these instructions carefully during installations.

The Heat-Zone-WD-C kit is carefully engineered and must be installed only as specified. If you modify it or any of its components you will void the warranty and you may possibly cause a fire hazard. Installation must be done according to applicable local, state, provincial and/or national codes.

Plan the location of the fireplace and warm air duct run(s).

DUCT RUN REQUIREMENTS

MAXIMUM Duct Run = 40-ft. (12 m)
MINIMUM Duct Run = 36 in. (914 mm)

DUCTING MATERIAL

6 in. (152 mm) B-vent Only
DO NOT duct into existing furnace plenum

MINIMUM CLEARANCE TO COMBUSTIBLES

1 in. (25 mm) from the B-vent
0 in. (0 mm) from top & bottom of outlet box
0 in. (0 mm) from the sides of outlet box
12 in. (305 mm) from wall register to ceiling
Refer to Figure 3.24.

CAUTION! *ALL wiring should be done by a qualified electrician and shall be in compliance with local codes and with the National Electric Code NFPA/NEC No. 70-current. CSC22.1 Canadian Electric Code.*

Possible Air Duct Runs / Locations

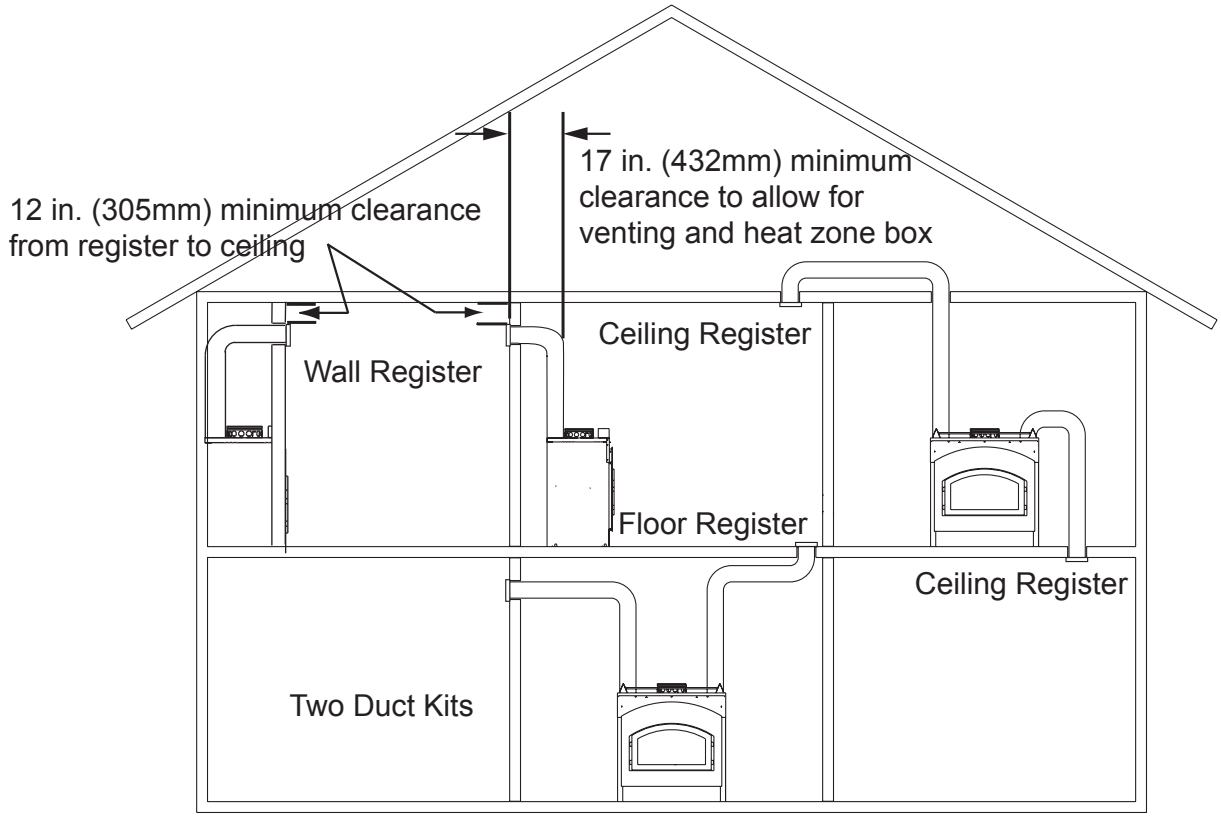

Figure 3.24 Minimum Clearances to Combustibles

Installation

- Remove the knockout or cover plate from the top of the fireplace and discard it. See Figure 3.25.
- Cut a 3 in. (76 mm) hole in the insulation board and remove it as per the dimensions shown in Figure 3.25.

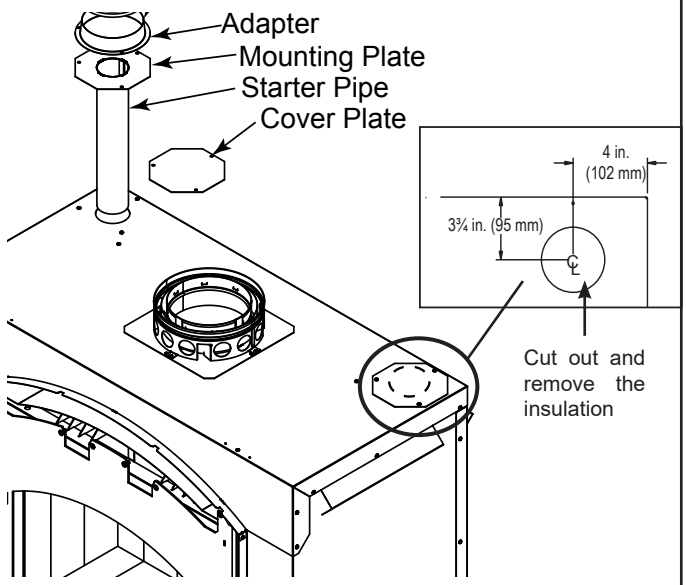

Figure 3.25

- Determine the necessary length of starter pipe from Table 3.1 and cut as required.

Table 3.1

Run Length	Cut Pipe Length
20 - 40 ft (6-12 m)	**16 in. (406 mm)** (1 full piece of pipe)
10 - 20 ft (3 - 6 m)	**24 in. (607 mm)**
3 - 10 ft (1 - 3 m)	**30-1/2 in. (775 mm)** (2 full pieces of pipe)

NOTE: It is important the pipe length be adhered to or it will affect the performance of your fireplace.

- On the mounting plate, hand bend the tabs downward. Slide the tabs over the outside of the starter pipe. Secure with four sheet metal screws included in fasteners package. Figure 3.26.

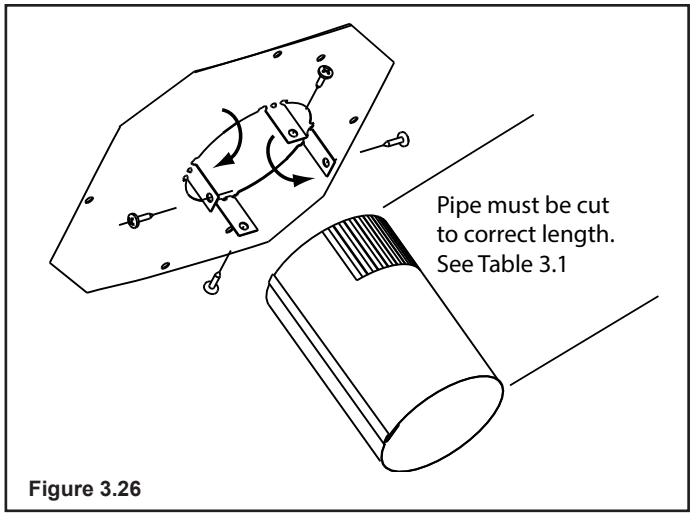

Figure 3.26

- Slide the starter pipe into the fireplace, matching the holes in the plate to the holes on the fireplace.
- Place the adapter on the mounting plate lining up holes. Using four sheet metal screws included in the kit, secure the adapter and mounting plate on the fireplace. After securing to the fireplace, tape down the adapter edges to the top of the fireplace with aluminum tape to prevent leakage.
- Determine the location for the air register and fan housing assembly. Cut a 6-3/4 in. x 13-1/8 in. (177 mm x 333 mm) hole between framing members (wall studs or floor joists). Attach the brackets to the fan housing with the screws provided. The brackets can be rotated 180° and mounted to the back side of the 2 x 4 if necessary. See Figure 3.27.

NOTICE: *The fan and electrical connections must be accessible for servicing per local code requirements.*

- Attach enough 6 in. (152 mm) B-Vent as required for your installation to the fan housing. **A maximum of (4) 90° elbows are allowed.** Screw the B-vent to the adapter. Also screw the B-vent to the outlet box on the fan housing. See Figure 3.28. Support duct at intervals of no greater than 4 ft (1 m) as required by local code.

WARNING! Risk of Fire! *Comply with all minimum clearances specified.*

- *A minimum 1/2 in. (13 mm) air clearance must be maintained at the back and 1 in. (25 mm) to the sides of the fireplace assembly.*

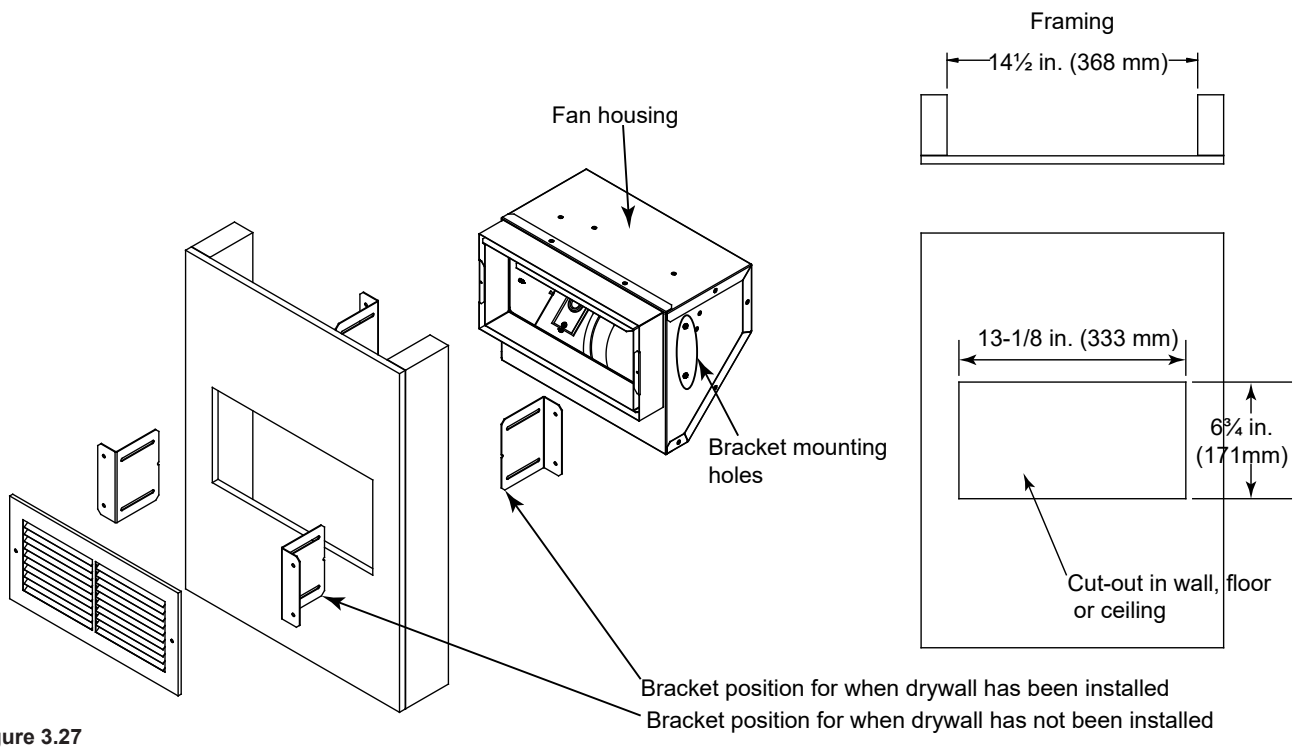

Figure 3.27

NOTICE: *Secure the duct so that clearance to the fireplace outer wrap is maintained. Tape all seams with aluminum tape 1-1/4 in. (32 mm) minimum width or as specified by local codes.)*

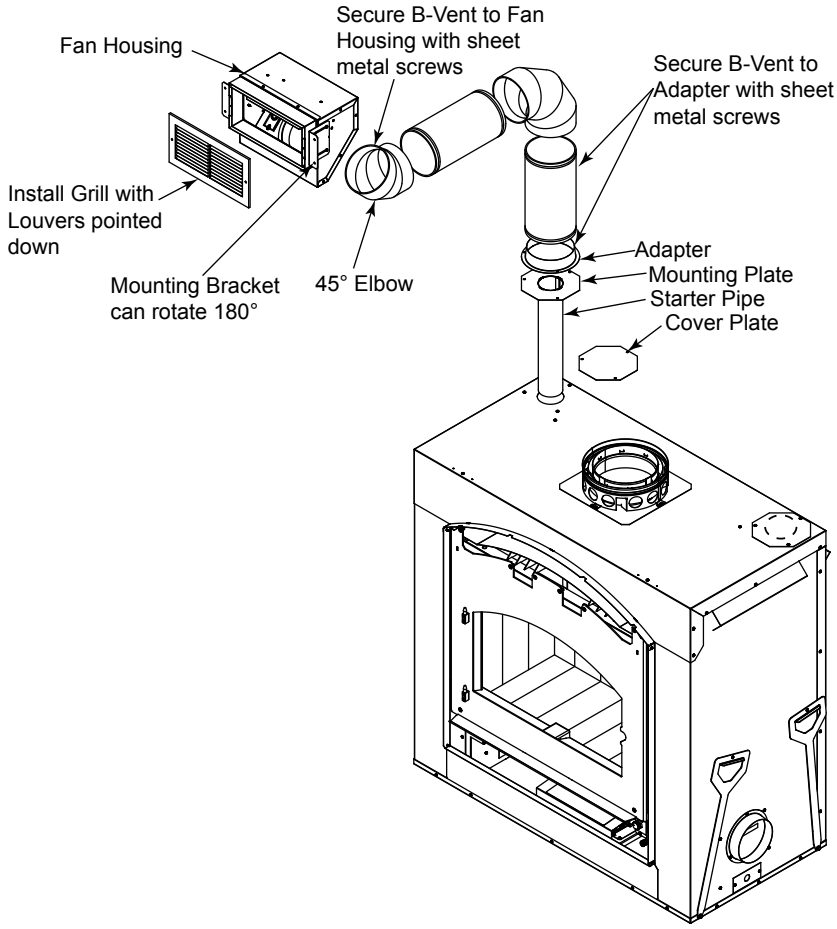

Figure 3.28

Installing Fan In Housing

- Insert fan into the fan housing starting with motor end first. Slip it below the "L" mounting bracket on the left side allowing the right side to drop in. See Figure 3.29.

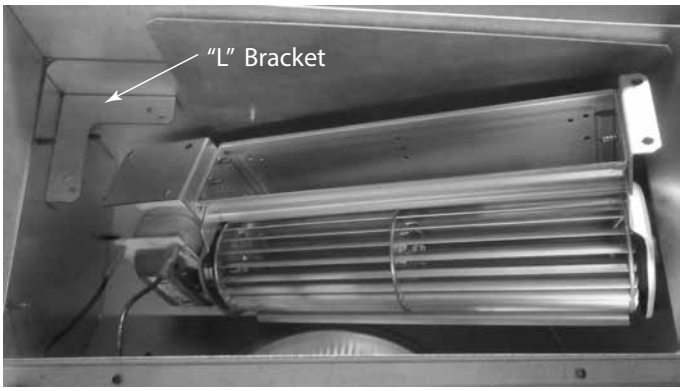

Figure 3.29

- Tilt the fan forward to clear the mounting brackets then lift the fan onto the brackets. See Figure 3.30.

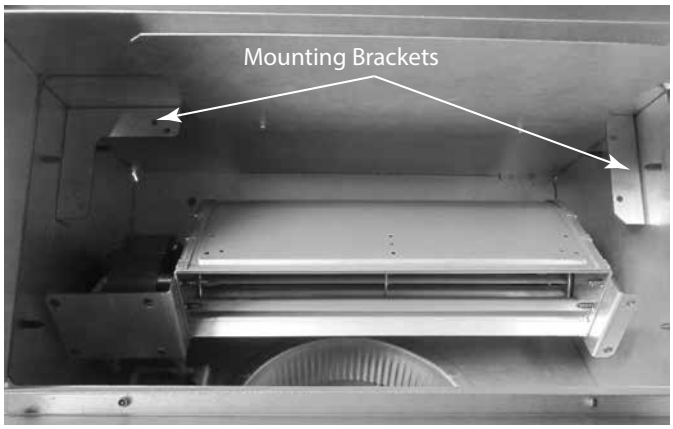

Figure 3.30

- Secure the fan to the mounting brackets with (4) screws provided. See Figure 3.31.

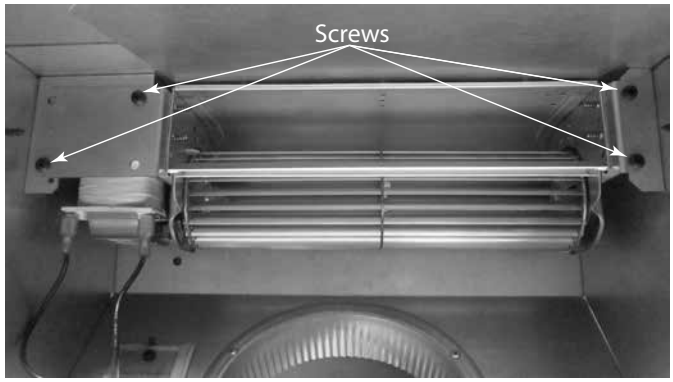

Figure 3.31

- Insert the fan wires through the grommet and into the junction box. See Figure 3.32.

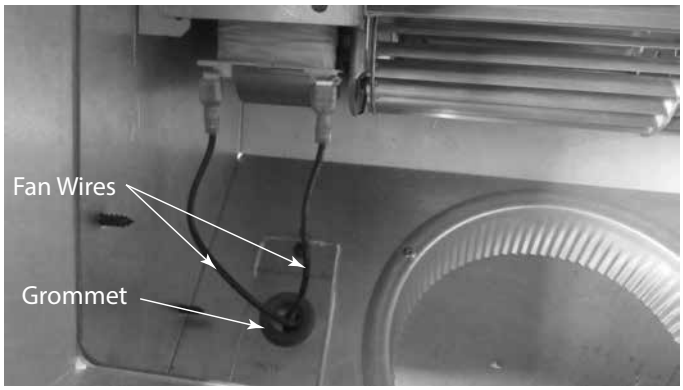

Figure 3.32

- Install the variable speed wall rheostat (with setting on "OFF") in a convenient location. This switch will control the Heat-Zone-WD-C fan operation.
- Remove the junction box. Wire 110 VAC service TO the wall rheostat and FROM the wall rheostat to the fan junction box. Use wire nuts to secure the 110 VAC service wires to the hot (black) and neutral (white) fan wires and screw the 110 VAC ground wire to the junction box. See Figure 3.33.
- Secure the return air grille to the fan housing making sure it is flush. The grille must be installed with the louvers pointing down.

NOTICE: *DO NOT USE ADJUSTABLE REGISTERS.*

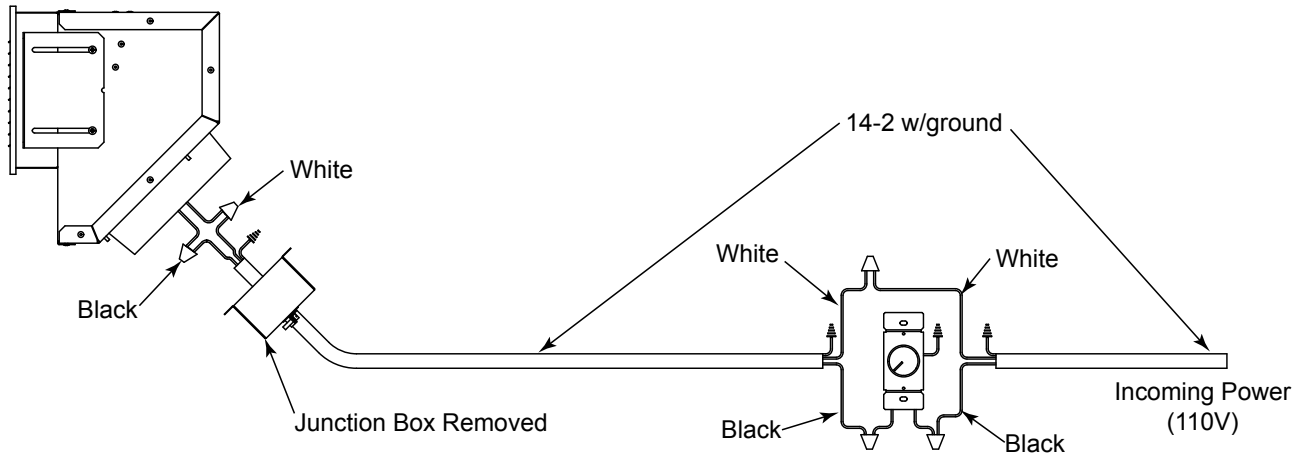

Figure 3.33

4 Electrical Wiring

NOTICE: *The manual override switch, rheostat speed control and cover plate are supplied. You will need to supply: 14-3 wire with ground; 14-2 wire with ground; standard wall mount junction box; wire nuts.*

- Remove junction box cover plate on the bottom right side of the fireplace to access the outlet wires. See Figure 4.1.

Figure 4.1 Junction Box Cover Plate

NOTE: The power may enter from either side by switching the cover plates on the outer shell and switching the cover plates in the bottom access area to the opposite sides. See Figure 4.2.

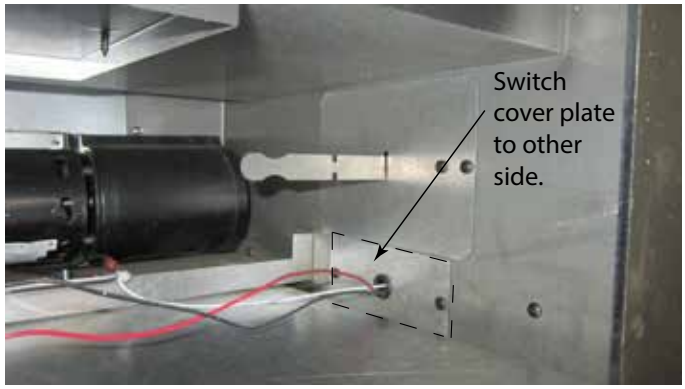

Figure 4.2 Bottom Access Area

- Thread the 14-3 with ground wire through the opening with the strain relief on the cover plate.
- Match colors to wire harness, (red to red, white to white, etc.) and secure with wire nuts.

NOTICE: *Wiring for fans must be done before framed enclosure is completed. If using a Heat-Zone-WD-C kit, it also must be installed before enclosure is complete.*

WARNING! Risk of Fire! DO NOT *apply combustible finishing materials over any part of the front of this fireplace.*

- *The metal fireplace face may only be covered with noncombustible materials such as ceramic tile, brick, or stone.*
- *Do not cover or block any cooling air slots.*

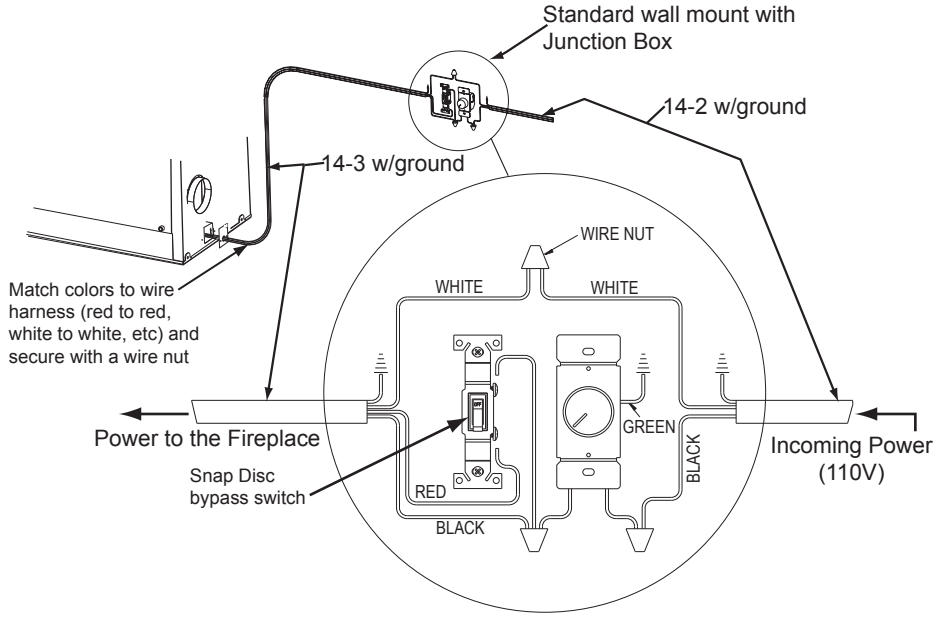

Figure 4.3 Fan Wiring Diagram

5 Chimney and Termination Requirements

A. Chimney Requirements

Vertical distances are measured from the base of the fireplace as shown in Figure 5.1.

Table 5.1 Chimney Requirements

Minimum overall straight height	*13 ft*	*3.96 m*
Minimum height with single offset/ return	*14.5 ft*	*4.42 m*
Double offset/return minimum height	*20 ft*	*6.1 m*
Maximum height	*90 ft*	*25.60 m*
Maximum chimney length between an offset and return	*20 ft*	*6.1 m*
Maximum distance between chimney stabilizers	*35 ft*	*10.67 m*
Maximum unsupported chimney length between the offset and return	*6 ft*	*1.83 m*
Maximum unsupported chimney height above the fireplace	*35 ft*	*10.67 m*
Maximum unsupported chimney above roof	*6 ft*	*1.83 m*

NOTICE: *A maximum of two pairs of offsets and returns may be used.*

WARNING! Risk of Fire! *You must maintain 2 in. (51 mm) air space clearance to insulation and other combustible materials around the chimney system. Failure to do so may cause overheating and fire.*

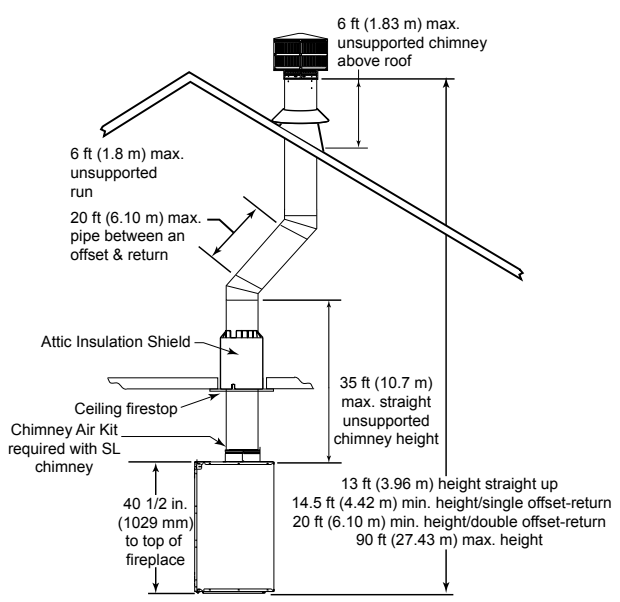

Figure 5.1 Chimney Requirements

NOTICE*: You must provide support for the pipe during construction and check to be sure inadvertent loading has not dislodged the chimney section from the fireplace or at any chimney joint.*

Table 5.2 Chimney Component Dimensions

HEIGHT OF CHIMNEY COMPONENTS		*in.*	*mm*
Chimney Stabilizer			
	SL3	4-3/4	121
Offsets/Returns			
	SL315	13-3/8	340
	SL330	15-1/2	394
Chimney Sections*			
	SL306	4-3/4	121
	SL312	10-3/4	273
	SL318	16-3/4	425
	SL324	22-3/4	578
	SL336	34-3/4	883
	SL348	46-3/4	1187

*** Dimensions reflect effective height.**

Note: 8 in. DuraPlus can also be used. See page 45.

B. Offsets/Returns

A 30° Elbow (measured from the vertical) is the largest that can be used in an offset. A 30° Elbow may not be combined with another Elbow to make a steeper offset (e.g. two 30° Elbows are not allowed to be put together to form a 60° elbow.). Avoid Elbows if possible. A totally vertical chimney is more efficient. When Elbows are necessary to avoid obstructions such as rafters, ridgepoles, or joists, you are only allowed to use 2 pair of Elbows in any one chimney system. Horizontal runs of chimney violate building code and are not allowed.

- An offset and return can be used as a single entity or separated by chimney section(s).

  ***WARNING! Risk of Fire! DO NOT** use offset/returns greater than 30° from vertical. Chimney draft will be restricted and could cause overheating and fire.*

- Measure the shift needed to avoid the overhead obstruction. Refer to dimension A in Figure 5.2.
- Find the appropriate A dimension listed in Table 5.3. The B dimension coinciding with the A dimension measurement in Table 5.3 represents the required vertical clearance needed to complete the offset/return.
- Read across the chart to find the number of chimney sections/model numbers needed between the offset and return.

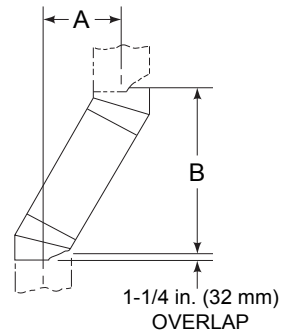

Figure 5.2 Chimney Offset/Return

Example:

Your "A" dimension from Figure 5.2 is 14-1/2 in. (368 mm). Using Table 5.3 the dimension closest to, but not less than 14-1/2 in. (368 mm) is 14-1/2 in. (368 mm) using a 30° offset/return.

You determine from the table that you need 34-1/8 in. (867 mm) (Dimension "B") between the offset and return.

The chimney component that best fits your application is one SL324.

Table 5.3 Offset Dimensions

15-degree				30-degree									
A		B		A		B							
in.	*mm*	*in.*	*mm*	*in.*	*mm*	*in.*	*mm*	SL306	SL312	SL318	SL324	SL336	SL348
1 5/8	41	13 3/8	340	3 5/8	92	15 1/2	394	-	-	-	-	-	-
2 7/8	73	17 3/4	451	5 1/2	140	18 5/8	473	1	-	-	-	-	-
4 1/8	102	22 3/8	568	7 1/4	184	21 3/4	552	2	-	-	-	-	-
4 1/2	114	23 5/8	600	8 1/2	216	23 3/4	603	-	1	-	-	-	-
5 3/4	146	28 1/4	718	10 1/4	260	27	686	1	1	-	-	-	-
6	152	29 3/8	746	11 1/2	292	29	737	-	-	1	-	-	-
7 1/4	184	34	864	13 1/4	337	32 1/8	816	-	2	-	-	-	-
7 3/4	197	36 1/8	918	14 1/2	368	34 1/8	867	-	-	-	1	-	-
8 3/4	222	39 3/4	1010	16 1/4	413	37 3/8	949	1	-	-	1	-	-
10 3/8	264	45 5/8	1159	19 1/4	489	42 1/2	1080	-	-	2	-	-	-
10 5/8	270	46 3/4	1187	20 1/2	521	44 5/8	1133	-	-	-	-	1	-
11 7/8	302	51 3/8	1305	22 1/4	565	47 3/4	1213	1	-	-	-	1	-
13 1/2	243	57 1/4	1454	25 1/4	641	52 7/8	1343	-	-	-	2	-	-
13 3/4	349	58 3/8	1483	26 1/2	673	55	1397	-	-	-	-	-	1
15	381	63	1600	28 1/4	718	58 1/8	1476	1	-	-	-	-	1
16 1/2	419	68 3/4	1746	31 1/4	794	63 1/4	1607	-	1	-	-	-	1
18	457	74 5/8	1895	34 1/4	870	68 1/2	1740	-	-	1	-	-	1
19 5/8	498	80 3/8	2042	37 1/4	946	73 3/4	1873	-	-	-	1	-	1
20 5/8	524	84 1/8	2137	39 1/8	994	76 7/8	1953	1	-	-	1	-	1
22 3/4	578	91 7/8	2334	43 1/4	1099	84 1/8	2137	-	-	-	-	1	1
24	610	96 1/2	2451	45 1/8	1146	87 1/4	2216	1	-	-	-	1	1
25 7/8	657	103 1/2	2629	49 1/4	1251	94 1/2	2400	-	-	-	-	-	2

Proper assembly of air-cooled chimney parts result in an overlap at chimney joints of 1-1/4 in. (32 mm). Effective length is built into this chart.

C. Termination Requirements

- Install a cap approved and listed for this fireplace system.
- Locate cap where it will not become plugged by snow or other materials.
- Locate cap away from trees or other structures.
- The bottom of the termination cap must be at least 3 ft (.91 m) above the roof AND at least 2 ft (.61 m) above any portion of roof within 10 ft (3.05 m) as shown in Figure 5.3.
- The distance required between caps is shown in Figure 5.3.

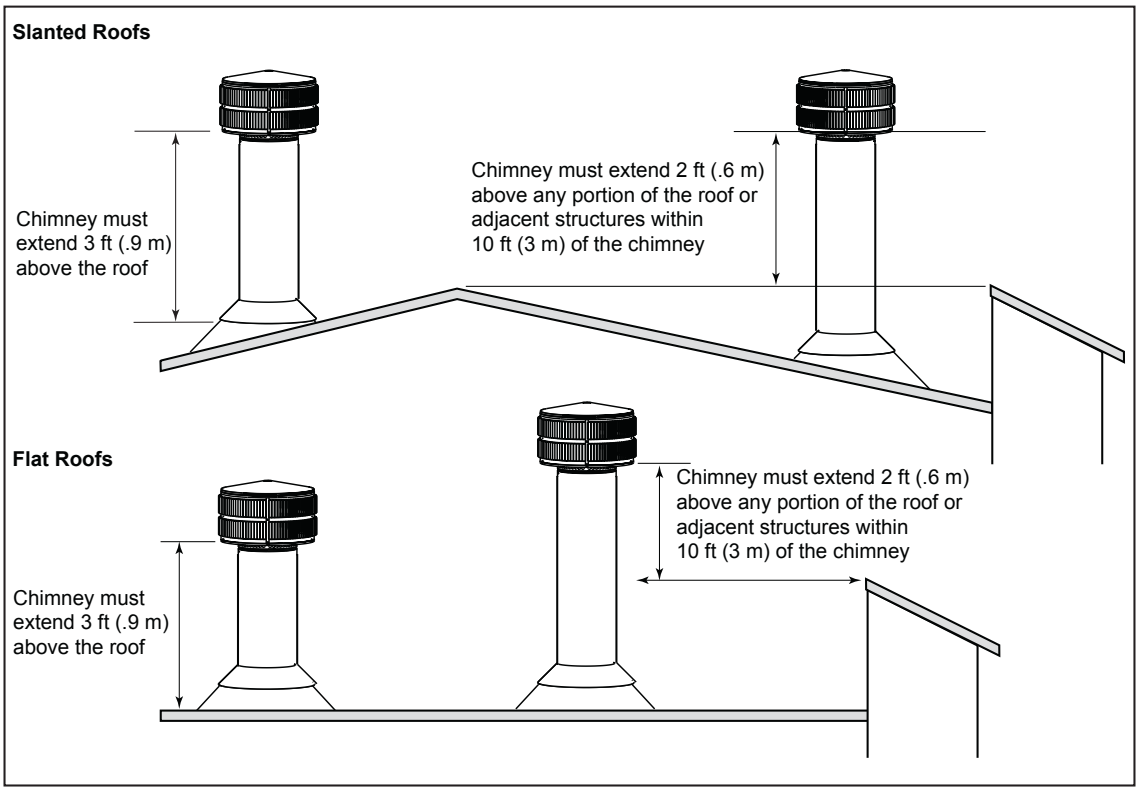

Multiple Chimney Locations

A	B
6 in. (minimum) up to 20 in. *152 mm/508 mm*	18 in. minimum *457 mm*
20 in. and over	0 in. minimum

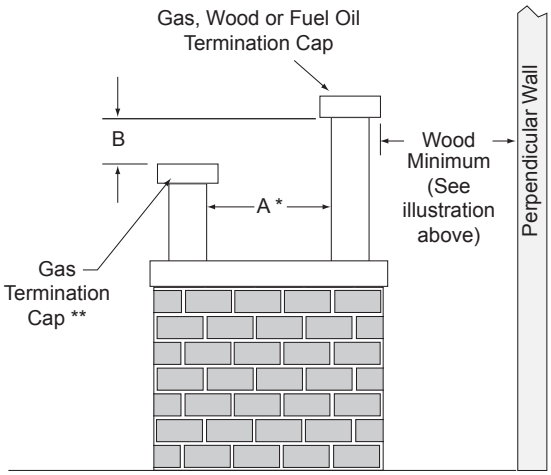

* If using decorative cap cover(s), this distance may need to be increased. Refer to the installation instructions supplied with the decorative cap cover.

** In a staggered installation with both gas and wood terminations, the wood termination cap must be higher than the gas termination cap.

Figure 5.3 Multiple Chimney Locations

6 Chimney Installation

A. Typical Chimney System

NOTICE: *Chimney performance may vary.*

- *Trees, buildings, roof lines and wind conditions affect performance.*
- *Chimney height may need adjustment if smoking or overdraft occurs.*

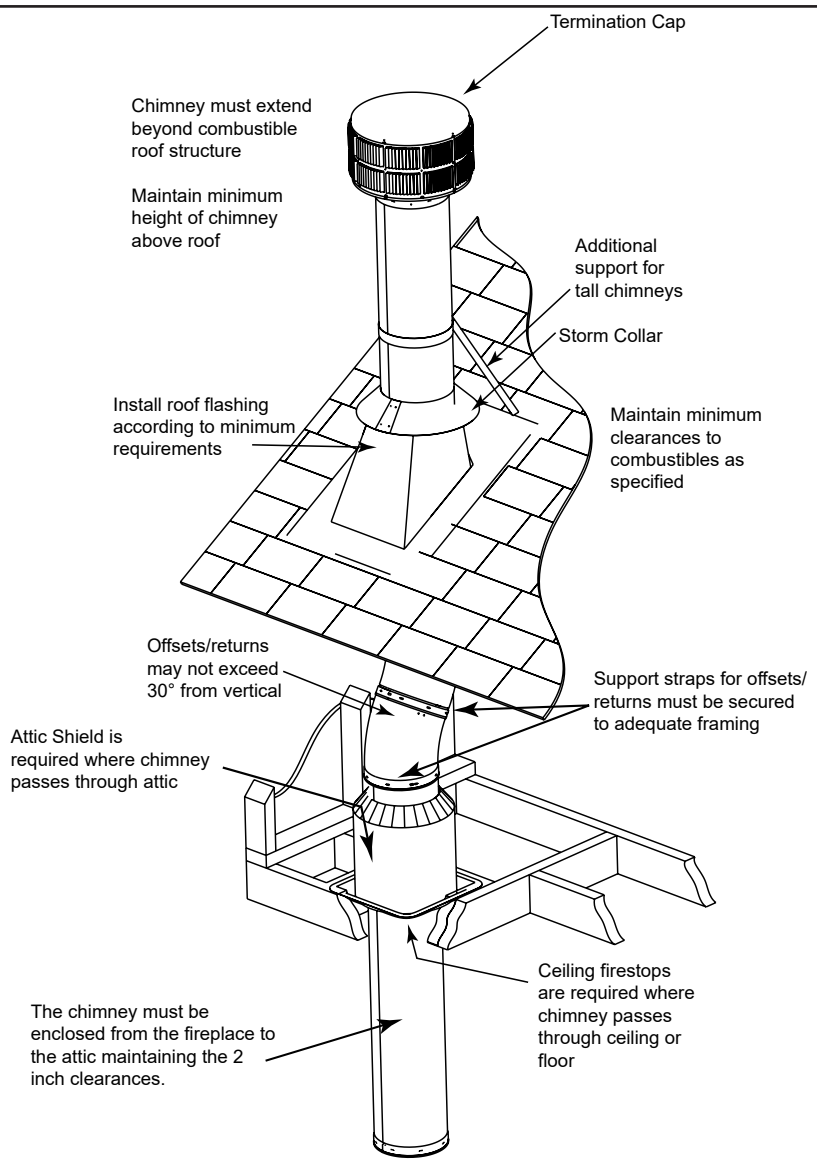

Figure 6.1 Typical Chimney System - Guidelines for Chimney System Installation

The SL300 series chimney (UL127 approved for use with this fireplace) is shipped with wrap around warning labels installed. These labels may be removed from the sections of chimney exposed above the roofline.

B. Assemble Chimney Sections

***WARNING! Risk of Fire! DO NOT** install substitute or damaged chimney components.*

Use only those components described in this manual.

Attach either a straight chimney section or an offset to the top of the fireplace starting with the inner flue followed by the outer casing. Continue this order until termination cap is reached (depending on your installation requirement). Chimney sections are locked together by pushing downward until the top section meets the stop bead on the lower section.

The inner flue is placed to the inside of the flue section below it. The outer casing is placed outside the outer casing of the chimney section below it. See Figure 6.2.
***NOTICE:** Chimney sections cannot be disassembled once locked together. Plan ahead!*

- Lock chimney sections and/or offsets/returns together by pushing downward until the top section meets the stop bead on the lower section.
- Pull on the top of each section as installed to make sure it is fully engaged and will not separate.
- You may use #6 or #8 sheet metal screws no longer than 1/2 in. (13 mm) to fasten chimney outer sections together. Do NOT penetrate inner flue.
- Vertical straight runs of chimney must be supported every 35 ft (10.7 m).

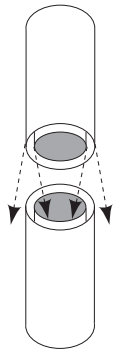

Figure 6.2 Assembling Chimney Sections

***WARNING! Risk of Fire! DO NOT** install substitute or damaged chimney components.*

C. Install Chimney Air kit (CAK4A)

***NOTICE:** Chimney Air Kit, Part CAK4A is required when using the SL-300 Pipe Series. Detailed instructions are supplied with the kit. If using the Dura-Plus System (must be 8 in./203 mm in diameter), the starter ring that came with the fireplace must be removed and replaced with the Dura-Plus Base Plate. The CAK4A is not required with a Dura-Plus System.*

- Install the chimney pipe first.
- Hand bend the tabs in position before placing on the fireplace.
- Place the box on top of the fireplace around the chimney pipe, push both pieces together and secure with screws provided.
- Use the pre-punched holes in the tabs as guides and drill holes through the fireplace top.
- Secure the CAK4A in place. See Figure 6.3.
- Seal around the kit at the flue and at the top of the outer shell with high temp caulk with a minimum rating of 500 degrees. See Figure 6.3.

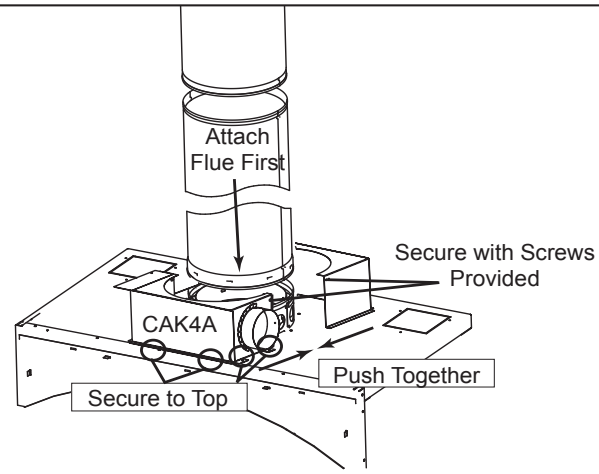

Figure 6.3 Installing the CAK4A

NOTES:
- The CAK4A termination cap must be a minimum of 4 ft (1219 mm) above the ground and kept free of debris.
- If the CAK4A is installed in a chase, the CAK4A side termination cap must be at least 3 ft (914 mm) below the chimney top.
- Seal around the cap and flex with caulk to stop air from getting into the chase. See Figure 6.4.
- The pipe cannot lay on top of the unit.

WARNING! Risk of Fire!

- *The flex pipe must never be compressed or deformed!*
- *Restricting the airflow inside the flex pipe may increase flue pipe temperatures causing a chase fire.*

P Traps

When using the chimney air kit (CAK) and the outside air kits, it is recommended that you install a P trap as shown in Figure 6.4 by bending the flex duct, or using 90° elbows if using rigid duct to help prevent air circulation when the fireplace is not in use. In colder climates, it is strongly recommended to use an insulated duct.

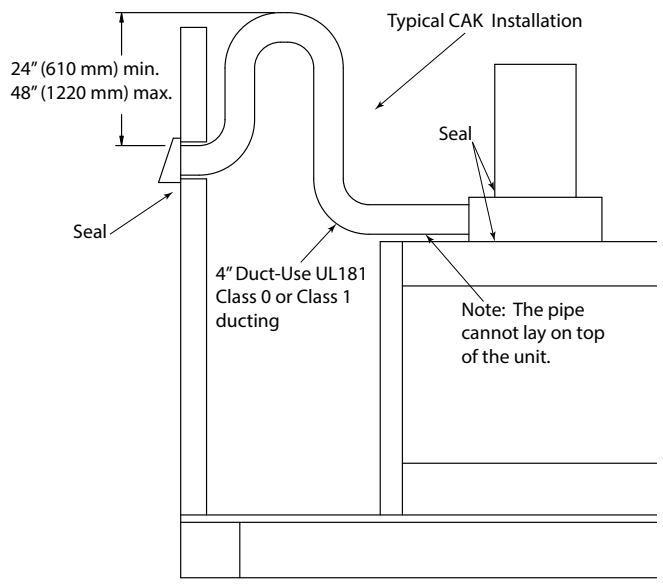

Figure 6.4 P Trap Installation Using Flex Pipe

D. Secure Offset/Return

WARNING! Risk of Fire!

- *Secure offsets with screws (not to exceed 1/2 in./13 mm In length).*
- *Secure returns with strapping.*
- *Straight chimney sections may be secured with screw (not to exceed 1/2 in./13 mm In length) at the joints.*
- *Keep chimney sections from separating or twisting.*

When offsets and returns are joined to straight pipe sections, they must be locked into position with screws (outer only). To prevent gravity from pulling the chimney sections apart, the returns and the chimney stabilizers have hanger straps for securing these parts to joists or rafters. See Figure 6.5.

* Use # 6 or # 8 sheet metal screw, or larger, no longer than 1/2 in. (13 mm).

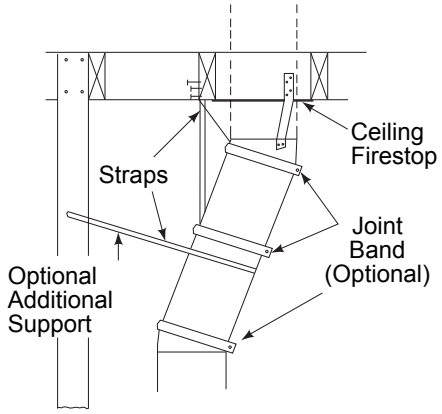

Figure 6.5 Secure the Chimney

E. Install Firestops

WARNING! Risk of Fire! *Firestops must be used whenever the chimney penetrates a ceiling/floor.*

- Mark and cut an opening in ceiling/floor as shown in Figure 6.6.
- Frame the opening with the same size lumber used in the ceiling joists.
- Nail the firestop to the bottom of the ceiling/floor joists.
- Provide a means to maintain the required air space between the chimney and insulation or install an attic insulation shield.

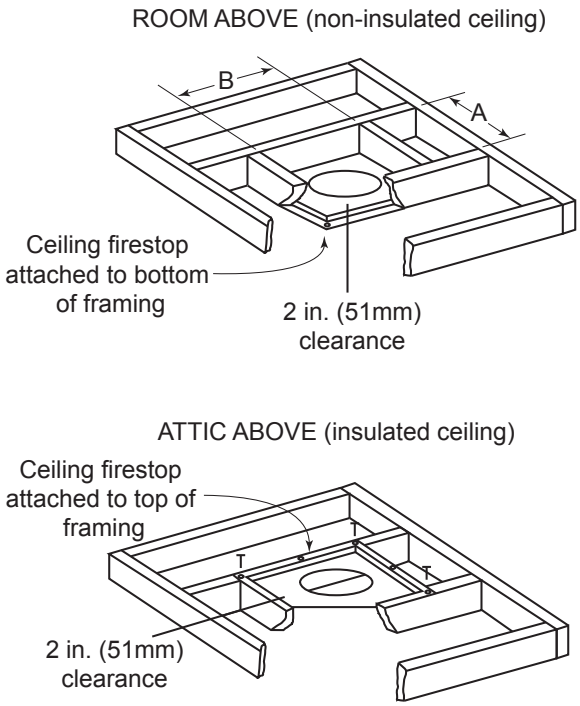

Note: Use same dimensional lumber for framing ceiling firestop and joists.

Catalog #	A		B	
	in.	*mm*	*in.*	*mm*
FS338	14-1/2	368	14-1/2	368
FS339	14-1/2	368	18-3/8	467
FS340	14-1/2	368	23	584

Figure 6.6 Installing the Ceiling Firestop

WARNING! Risk of Fire! DO NOT *seal area between firestop opening and chimney pipe except where they enter the attic or leave the warm air envelope of the home (use 600° F sealant).*

F. Install Attic Insulation Shield

WARNING! Risk of Fire! *You MUST install an attic insulation shield when there is any possibility of insulation or other combustible material coming into contact with the chimney.*

- ***DO NOT*** *pack insulation between the chimney and the attic insulation shield.*
- *Failure to keep insulation and other materials away from chimney pipe could cause fire.*
- ***DO NOT*** *offset chimney inside insulation shield.*
- *Combustible material may come in contact with the attic insulation shield as long as the required clearances are maintained to the chimney pipe.*

Installation of a ceiling firestop is required:

Note: In Canada a CAS8 must be installed. See instructions provided with kit.

- Refer to Figures 6.6, 6.7, 6.8 and 6.9.
- If the attic shield is pre-rolled continue. If it is a flat part, try and roll it up to aid in wrapping it around the chimney.
- Pre-bend all the tabs in at the top to 45°.
- Wrap the shield (around the chimney if already installed) until you have an overlap and the three holes on each side match up (large holes on top).
- Insert three screws into the matching holes to form a tube starting at the bottom.
- Bend the tabs on the bottom of the tube inward to 90° to maintain chimney air space.
- Rest the insulation shield on the ceiling firestop below.
- Tape off any opening around the bottom.

If you wish to make a custom shield or barrier, follow these guidelines:

- Metal is preferred, although any material stiff enough to hold back the insulation can be used.

  WARNING! Risk of Fire! *Use of cardboard or other materials that can deflect under humidity or other environmental conditions is not recommended.*
- The shield or barrier must be tall enough to extend above the insulation and prevent blown-in insulation from spilling into the cavity and accommodate the amount os insulation as required by the National Building Code.
- Maintain specified air spaces around chimney.
- Check instructions and local codes for further details.

Double-check the Chimney Assembly

Continue assembling the chimney sections up through the ceiling firestops as needed. While doing so, be aware of the height and unsupported chimney length limitations given under Section 5.

Check each section by pulling up slightly from the top to ensure proper engagement before installing the succeeding sections. If they have been connected correctly, they will not disengage when tested.

The chimney must be enclosed from the fireplace to the attic maintaining the 2 inch clearances to combustibles.

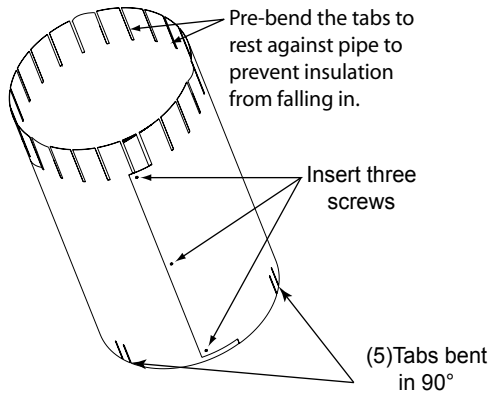

Figure 6.7 Prepare Attic Insulation Shield

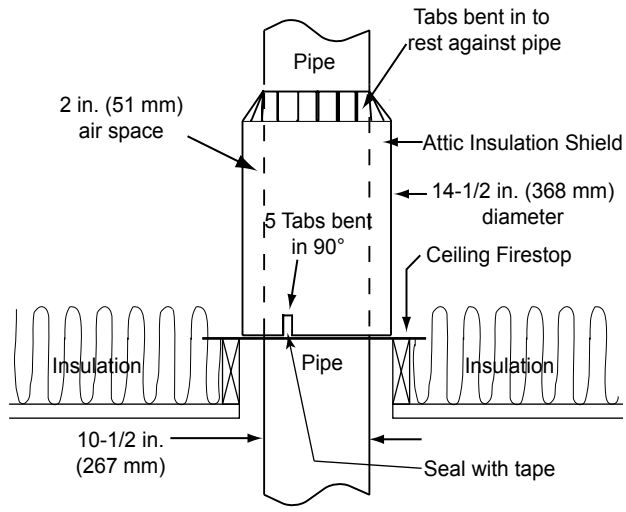

Figure 6.8 Install Attic Insulation Shield (firestop above ceiling)

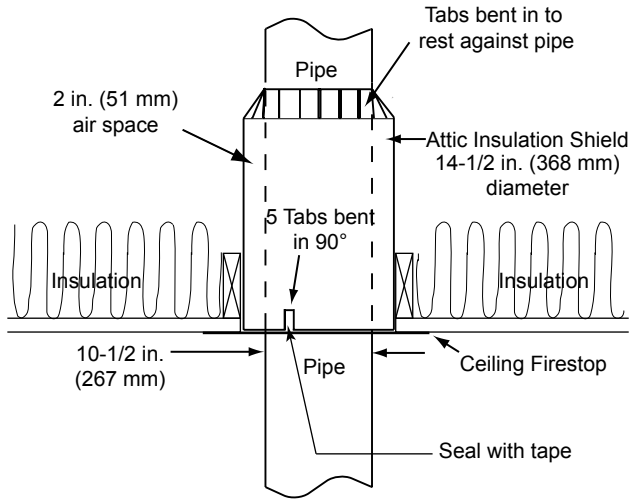

Figure 6.9 Install Attic Insulation Shield (firestop below ceiling)

G. Roof Penetration

- Refer to Figure 6.10.
- Plumb from roof to center of chimney.
- Drive a nail up through roof to mark center of pipe.
- Measure to either side of nail and mark the 14-1/2 in. x 14-1/2 in. (368 mm x 368 mm) opening required.
- Measure opening on the horizontal; actual length may be larger depending on roof pitch.
- Cut out and frame opening.

Install Flashing

- Assemble chimney so it passes through the framed opening.
- Slip the flashing over the chimney.

NOTICE: *Roofing shingles must be below the flashing plate on the lower side of a sloped roof and over the flashing plate on the sides and top.*

- Nail the flashing to the roof. Keep gaps between the flashing plate and the roof to a minimum.
- Caulk the flashing plate and roof junction as well as the vertical seam on the flashing. All nail heads must be caulked with a roofing sealant.
- Caulk the overlap seam of any exposed pipe sections that are located above the roof line to prevent leaks.

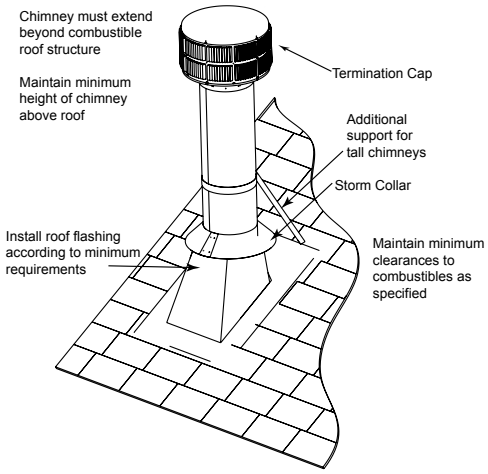

Figure 6.10 Install Flashing

H. Manufactured Home Installation SL-300 Series Ceiling/Roof Thimble

NOTICE: REQUIRED *for manufactured homes.*

- Locate the point where the chimney will exit the roof by plumbing down to the center of the chimney. Lay out, cut and frame a 14-1/2 in. (368 mm) square opening (measured on the horizontal) through the ceiling and roof structure. ***Consult local codes for framing details.***
- The thimble must extend completely through the roof structure shielding combustible materials. Five location holes have been provided to allow for a variety of ceiling/roof thicknesses. A thimble extension is required when the ceiling/roof thickness exceeds 12-1/2 in. (318 mm). The extension should overlap the thimble one inch.
- To attach the extension to the thimble, drill 1/8 in. (3 mm) holes through the outer shield of the thimble using the predrilled holes in the extension as guides. Attach the extension to the thimble using the screws provided with the extension.
- Install the thimble assembly and nail it securely to the framing members.

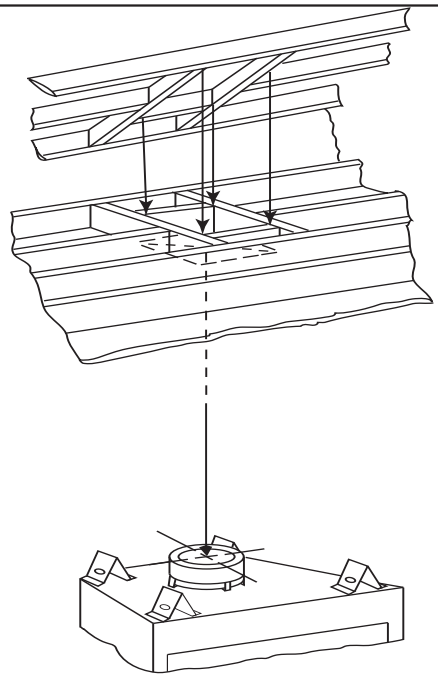

Figure 6.11 Ceiling/Attic Construction

- Center the flashing over the chimney and nail it to the roof. Keep gaps between the flashing plate and the roof to a minimum. Caulk the flashing plate and roof junction as well as the vertical seam on the flashing. All nail heads must be caulked with a roofing sealant.
- Finish assembling the chimney storm collar and termination cap following the installation instructions provided with them.

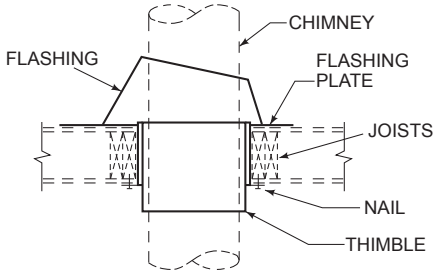

Figure 6.12 Installing Part: 12966A, Configuration 1

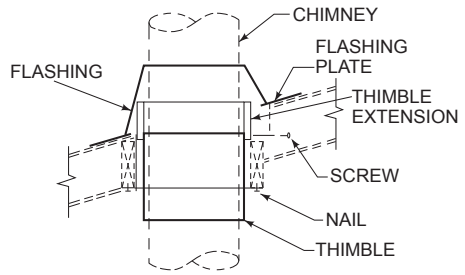

Figure 6.13 Installing Part 12966A, Configuration 2

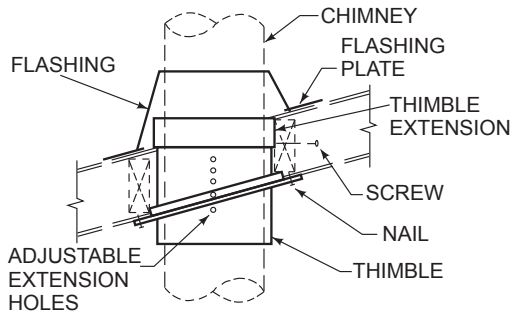

Figure 6.14 Installing Part 12966A Configuration 3

I. Install Chase/Chase Top

- You MUST use a chase top in a chase installation. Chase tops are available from your Majestic dealer or may be field constructed.
- Include a turndown and drip edge to prevent water from seeping into the chase.
- Include a 2 in. (51 mm) soldered, welded or spun collar around pipe opening to keep water out.
- Provide a 1/8 in. (3 mm) gap around the flue pipe.
- Slope the chase top downward away from the opening.

***WARNING! Risk of Fire! DO NOT** caulk the pipe to the chase top collar.*

- Caulk all seams to prevent leaks.

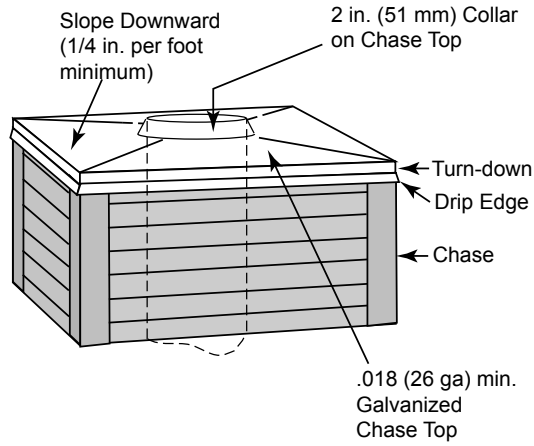

Figure 6.15 Chase Top Construction

J. Install Termination Cap

Install the chimney sections up through the chase enclosure.

- Using 300° silicone sealant, caulk the overlap seam of any exposed pipe sections that are located above the roof line to prevent leaks.
- Refer to termination cap instructions.

WARNING! Risk of Fire! *The minimum overlap of cap to pipe (as shown in the following illustrations) MUST be met or chimney may separate from cap. Separation allows sparks, heat and embers to escape.*

NOTICE: *Paint the termination cap with a rust-resistant paint to protect against the effects of corrosion on those parts exposed to the weather.*

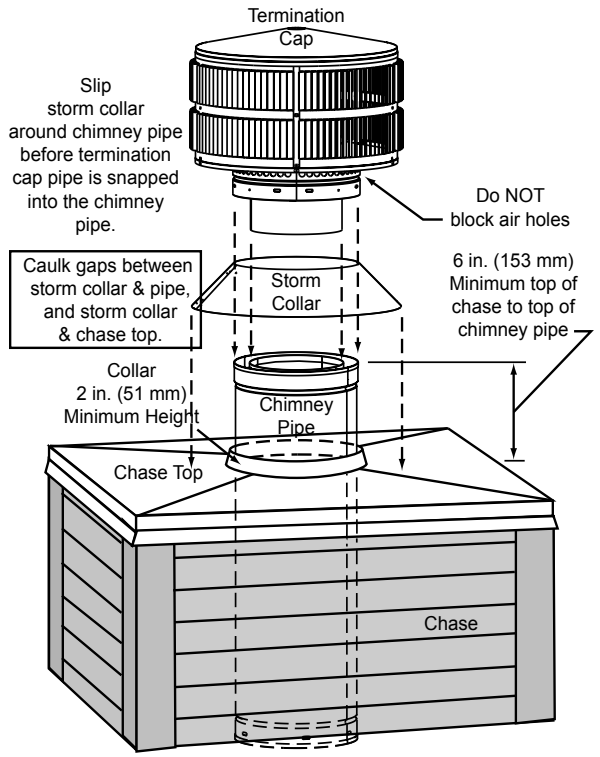

Termination cap pipe and chimney section must be snapped together to maintain an overlap of 1-1/2 in. (38 mm).

Figure 6.16 Installing a TR344 Round Termination Cap

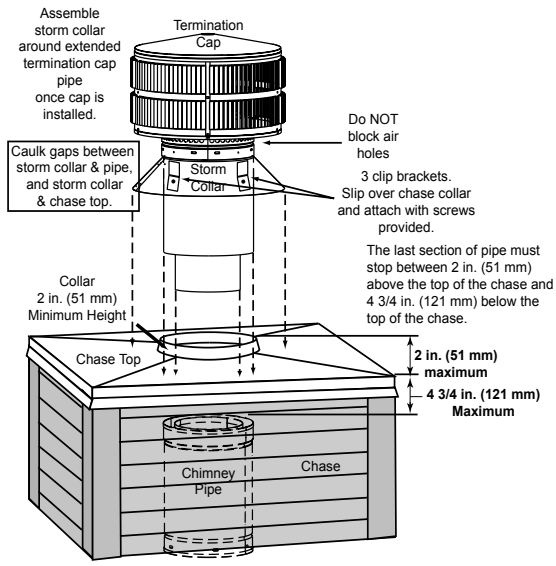

Figure 6.17 Installing a TR342-B Round Telescoping Termination Cap

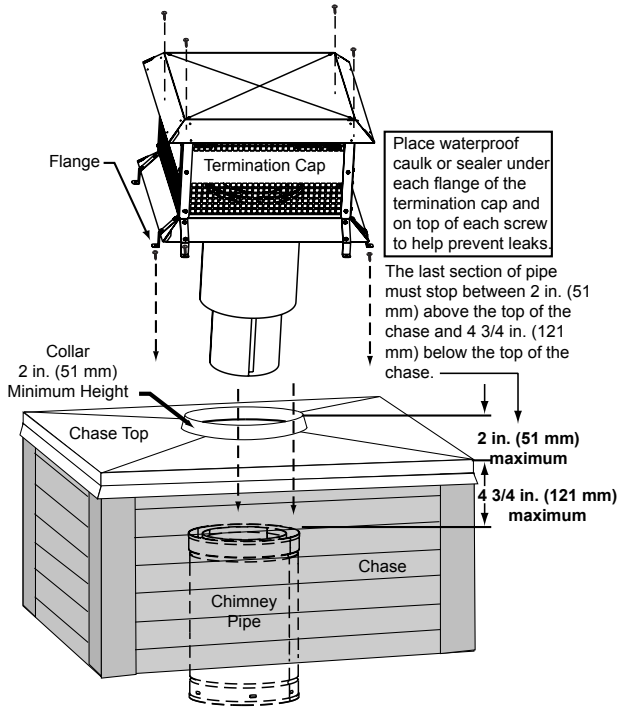

Figure 6.18 Installing an ST375 Square Termination Cap

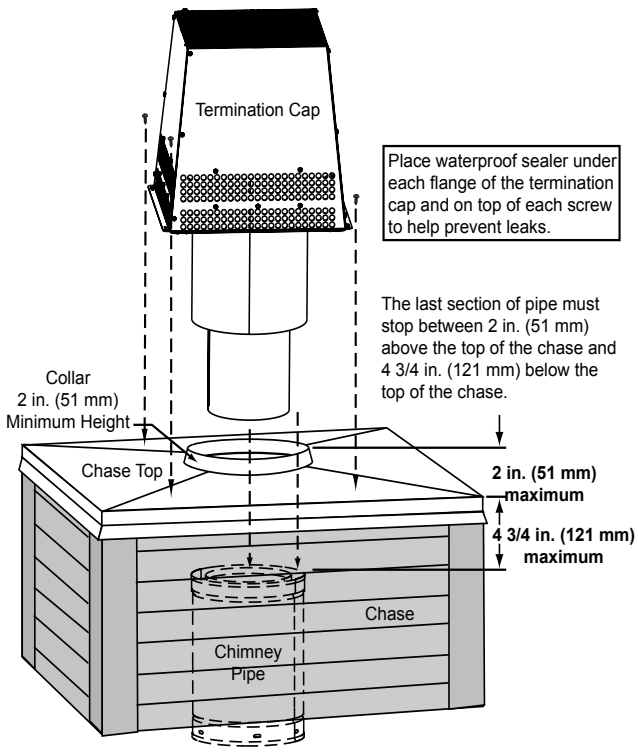

Figure 6.19 Installing a TS345/TS345P Square Termination Cap

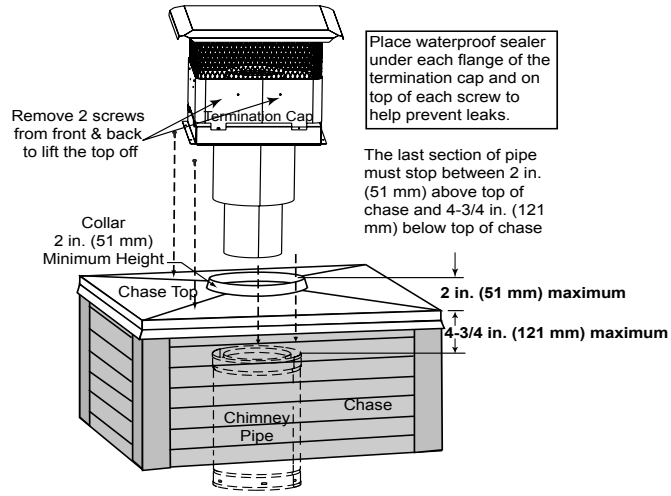

Figure 6.20 Installing a TCT375 Terra Cotta Cap

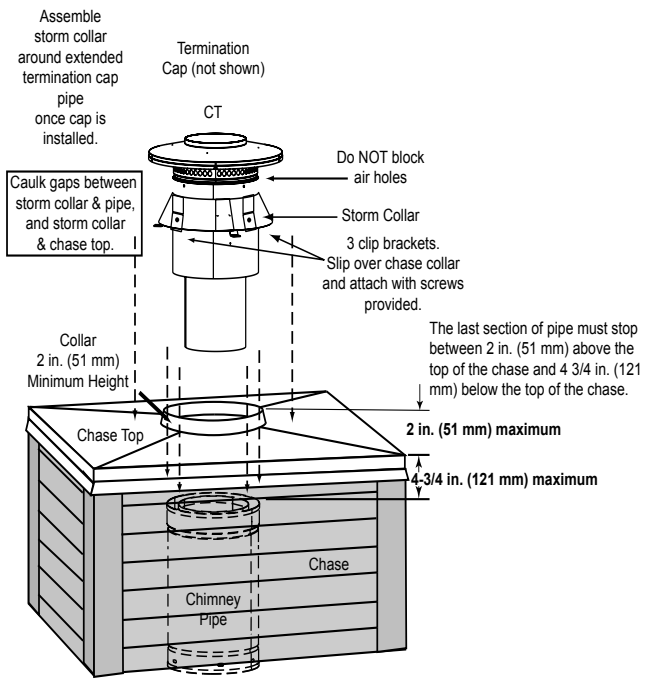

Figure 6.21 Installing CT-3A Cap Adapter

7 Shrouds

***WARNING! Risk of Fire!** Shrouds must be constructed as specified. Improper construction may overheat chase top.*

Shrouds may be field constructed where permitted by regional building codes.

***NOTICE:** Some regional codes require an agency-Listed shroud. Consult your local building officials.*

The shrouds must be constructed from minimum .018 in. (26 ga) thick aluminzed steel.

Some shrouds require a radiation shield. Use where specified.

A. Radiation Shield

Radiation shield must be constructed of minimum 26 ga thick sheet metal.

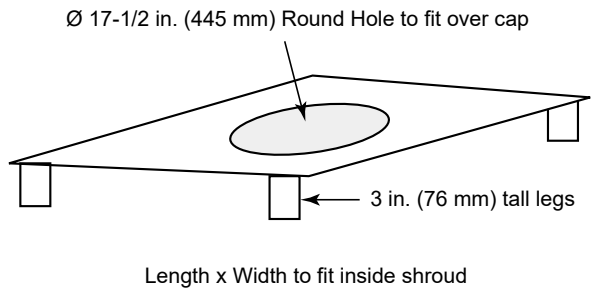

Figure 7.1 Radiation Shield

B. Field Constructed Shrouds

The following field constructed shroud designs have been tested for HHT fireplace systems and termination caps.

1. Open Top Shroud

TR11/TR11T TV (top vented) caps do not require radiation shield.

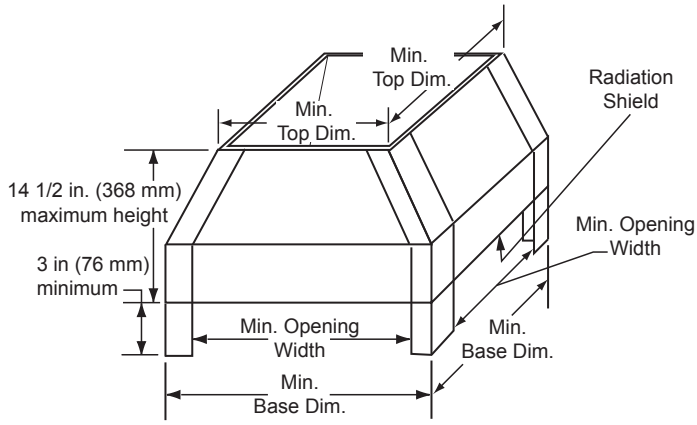

	TR11/11T	TR11/11T TV
Min. Base Dims.		
in	32 x 32	26 x 26
mm	813 x 813	660 x 660
	Radiation Shield Required	Radiation Shield Not Required
Min. Top Dims.		
in	29 x 29	23 x 23
mm	737 x 737	584 x 584
Min. Opening Width		
in	26 x 26	20 x 20
mm	660 x 660	508 x 508

Figure 7.2 Open Top Shroud Dimensions (with Radiation Shield)

TR11/TR11T caps require radiation shield unless installed partially above the shroud. The TR cap must be raised to the minimum dimensions (or greater) above the shroud. Refer to Figure 7.3.

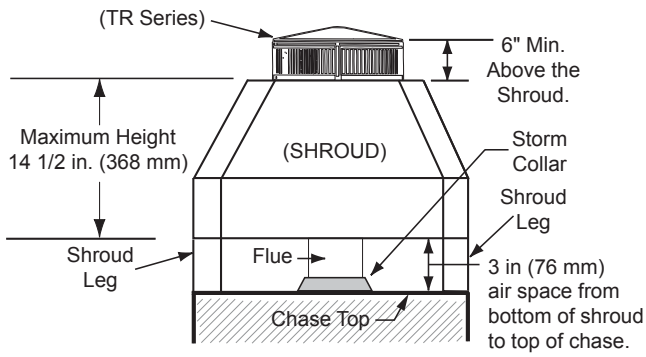

Figure 7.3 Shroud & TR Series cap with no Radiation Shield

2. Mailbox Style Shroud

Radiation shield required

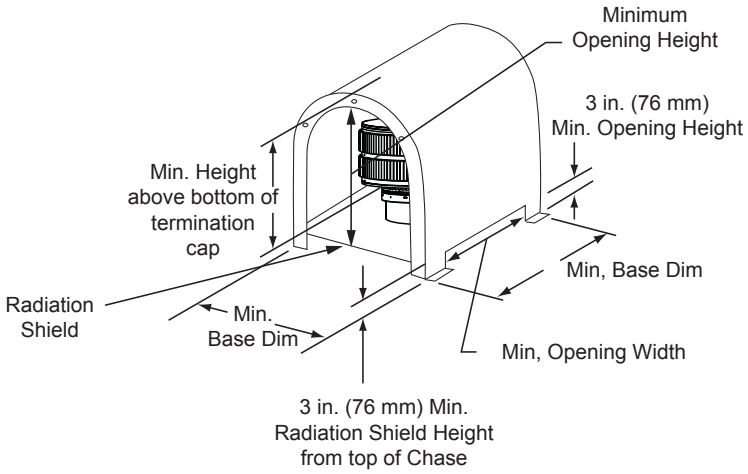

	TR11/11T	TR11/11T TV
Min. Base Dims.		
in	34 x 34	28 x 30
mm	864 x 864	711 x 762
Min. Height Above Bottom of Termination Cap		
in	28-1/4	27-1/2
mm	718	698
Min. Opening Width		
in	28	22
mm	711	559
Min. Opening Height		
in	18-1/4	17-1/2
mm	464	445

Figure 7.4 Mailbox Style Shroud Dimensions

3. Roofed Style Shroud

Radiation shield required

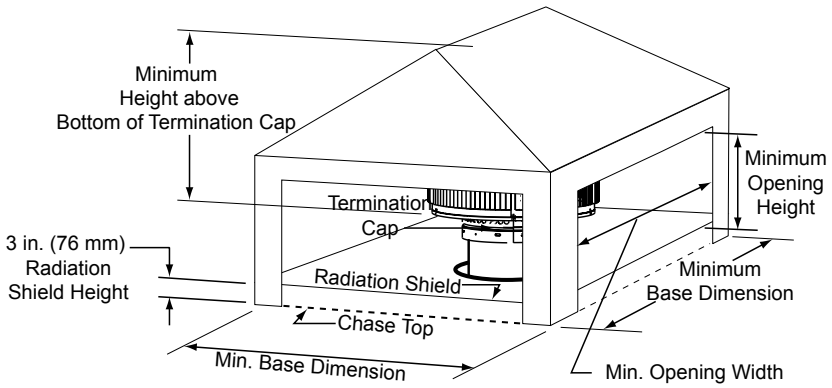

TR11/11T TR11/11T TV	
Min. Base Dims.	
in	34 x 34
mm	864 x 864
Min. Height Above Bottom of Termination Cap	
in	23
mm	584
Min. Opening Width	
in	28
mm	711
Min. Opening Height	
in	12
mm	305

Figure 7.5 Roofed Style Shroud Dimensions

8 Finishing

A. Template

A cardboard template of the front is printed on the outside of the shipping box. Cut out the template along the outside of the line for use in your installation. If using the cardboard template, it will require 1/4-20 bolts to attach it to the fireplace, (NOT INCLUDED). A metal template (see catalog) is available for more durable continued use, remaining accurate over time. Both measure 1/8 in. (3 mm) larger all the way around than the actual front.

Note: This 1/8 in. of the non-combustible material must be painted or the red will be visible.

Tools Required: 5/32 in. Allen wrench.

- Remove the screws from the fascia and remove fascia from the fireplace (if installed). Save the screws. Store the fascia in a safe, protected area to prevent scratching or other damage.
- Install the template on the front of the fireplace (Figure 8.1) with screws removed or provided.

NOTE: Do not over tighten the screws, just tighten up the template enough so that it comes in contact with the outer flanges on the front of the fireplace.

You are now ready to continue your installation with the desired decorative material. The template also serves as a protective covering and prevents damage to the front of the fireplace.

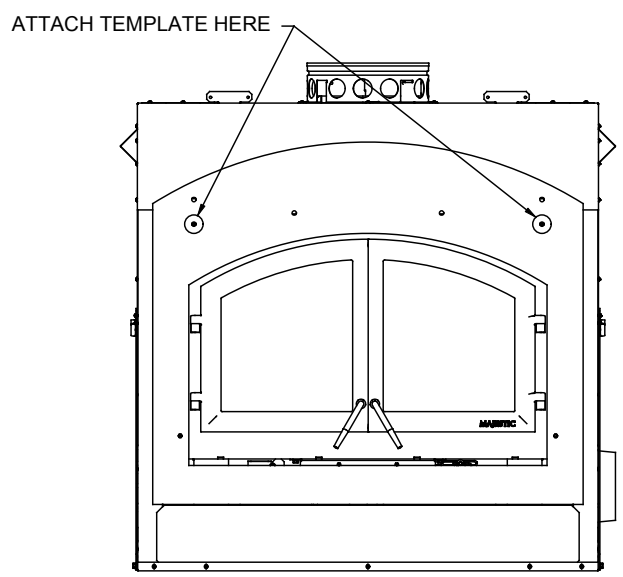

Figure 8.1 Install the Finishing Template

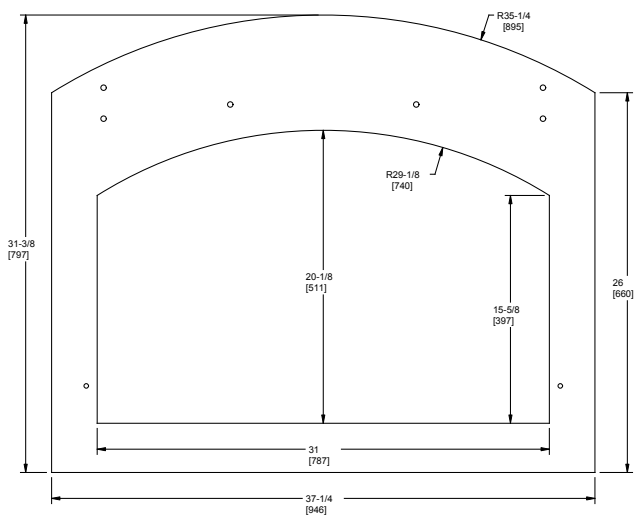

Figure 8.2 Template Dimensions

Note: ***DO NOT*** remove hang tags until installing finish materials.

NOTE: *The decorative fascia must be removable for future serviceability.*

Figure 7.1 Install the Finishing Template

B. Finish the Wall

Use a wet or dry towel or a soft brush to remove any dust or dirt from the non-combustible facing material.

Apply a non-combustible adhesive to attach tile, stone or other non-combustible finishing materials per manufacturer's instructions.

1. Stone, Brick Finish

***WARNING! Risk of Fire! DO NOT** apply tar paper or water resistive barrier over non-combustible board.*

- Apply metal lath to the 1/2 in. thick non-combustible board with corrosion resistant self-tapping screws capable of penetrating the metal surface behind the non-combustible board.
- HHT recommends using type N or type S mortar. Due to high temperatures, review polymer modifiers specification sheet before using.

2. Tile, Granite, Marble Finish

- Due to high temperatures, HHT recommends using unmodified thinset when applying tile.
- When applying granite or marble, HHT recommends using thinset to adhere. If using a different adhesive, review specification sheet for application in high temperature areas.

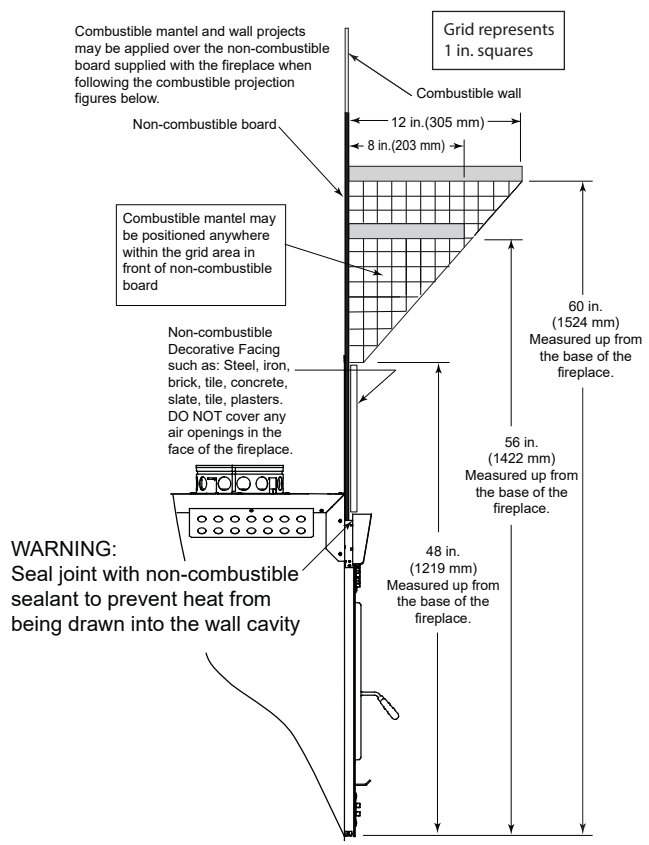

Figure 8.3 Mantel Height

C. Mantel and Wall Projections

A combustible mantel may be positioned no lower than 60 in. (1524 mm) at 12 in. (305 mm) deep from the base of the fireplace. Combustible mantel and wall projections may be applied over the non-combustible board supplied with the fireplace when following the combustible projection figures below.

Minimum clearance faceplate to sidewall is 16 in.

The combustible mantel may have a maximum depth of 12 in. (305 mm). Combustible trim pieces that project no more than 3/4 in. (19 mm) from the face of the fireplace can be placed no closer than 6 in. (152 mm) from the side of the decorative front. See Figures 8.3 and 8.4. Surround legs that project more than 3/4 in. (19 mm) must be 16 in. (406 mm) away from the side of the decorative front. Combustible trim must not cover:

- the metal surfaces of the fireplace
- where the non-combustible board is placed over the metal surfaces
- the space between the metal face of the fireplace and framing members

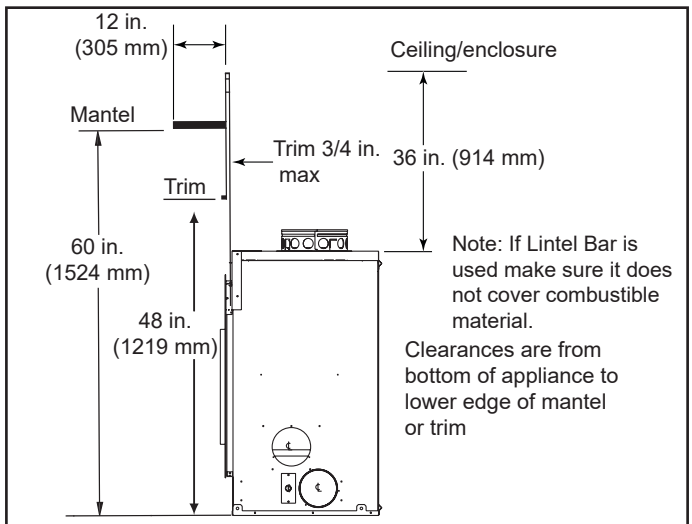

Figure 8.4 Mantel Specifications - Combustible Mantel

A noncombustible mantel may be positioned no lower than 38 in. (965 mm) from the base of the fireplace.

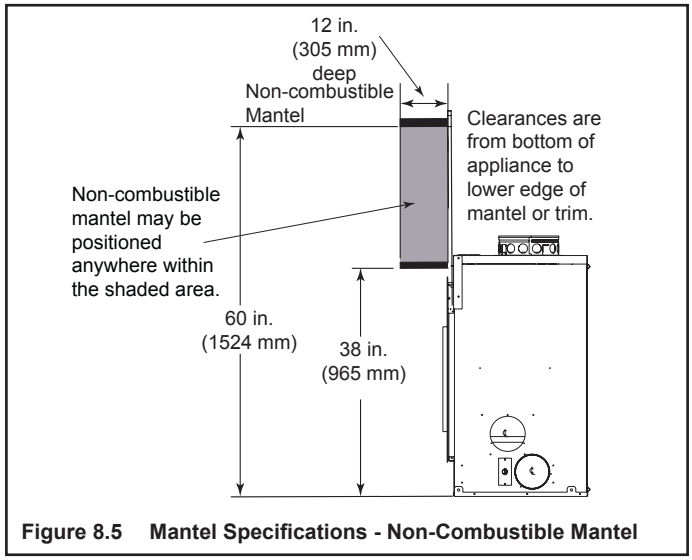

Figure 8.5 Mantel Specifications - Non-Combustible Mantel

D. Finishing the Hearth Extension

WARNING! Risk of Fire! *High temperatures, sparks, embers or other burning material falling from the fireplace may ignite flooring or concealed combustible surfaces.*

- *Protective metal hearth strips MUST be installed.*
- *Hearth extensions MUST be installed exactly as specified.*

A hearth extension must be installed with all fireplaces to protect the combustible floor in front of the fireplace from both radiant heat and sparks.

- You MUST use a hearth extension with this fireplace.
- Refer to Figure 8.6 for minimum dimensions.
- This fireplace has been tested and approved for use with a hearth extension insulated to a minimum R value of 1.03.
- The hearth extension material MUST be covered with tile, stone or other non-combustible material.
- Manufactured hearth materials will usually have a published **R value** (resistance to heat) or **k value** (conductivity of heat). Refer to the formula in Table 8.1 to convert a k value to an R value,
- Refer to Table 8.2 for hearth extension insulation alternatives.

Table 8.1

R = 1/k x inches of thickness

Table 8.2

Hearth Extension Insulation Alternatives, R Value = 1.03			
Material	**k per inch thick**	**r per inch thick**	**Minimum thickness required**
Hearth & Home HX3, HX4	0.49	2.06	1/2 in.
USG Micore 300™	0.49	2.06	1/2 in.
USG Durock™ Cement Board	1.92	0.52	2 in.
Cement Mortar	5.0	0.20	5 1/8 in.
Common Brick	5.0	0.20	5 1/8 in.
Ceramic Tile	12.50	0.08	12 1/4 in.
Armstrong™ Privacy Guard Plus	0.46	2.18	1 in.
Marble	14.3-20.0	0.07-0.05	14 5/8 in. - 20 3/8 in.

WARNING! Risk of Fire!

You must comply with all minimum air space clearances to combustibles as specified. Framing or finishing material used on the front of, or in front of, the fireplace closer than the minimums listed must be constructed entirely of non-combustible materials (i.e., steel studs, concrete board, etc.). Failure to comply may cause fire.

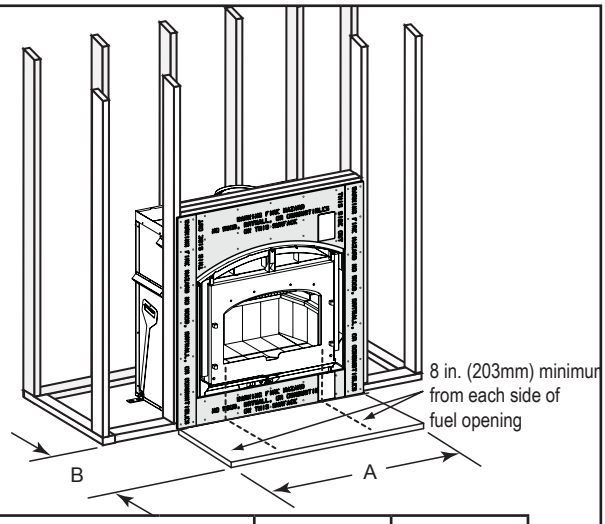

Model # WARMMAJIC		A	B
	in.	41	20
	mm	1041	508

Figure 8.6 Minimum Hearth Extension Dimensions

- Fireplace and Hearth Extension flush on the floor
  Non-combustible flooring a minimum of 20 in. (508 mm) in front of and 8 in. (203 mm) to either side of the fuel opening is required as shown in Figure 8.6.
  The construction of, and materials used for a hearth extension are shown in Figure 8.7. A hearth extension of this construction may be covered with any non-combustible decorative material and may have a minimum thickness as per Figure 8.7. Seal gaps between the hearth extension and the front of the fireplace with a bead of non-combustible sealant or grout.

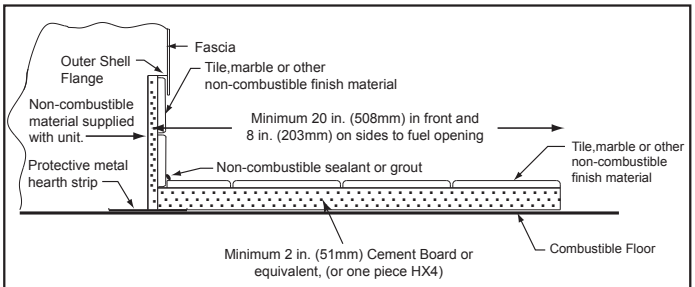

Figure 8.7 Fireplace and Hearth Extension Flush on the Floor.

- Fireplace installed flush on the floor and hearth extension raised to bottom of fascia:
  Non-combustible flooring a minimum of 20 in. (508 mm) in front of and 8 in. (203 mm) to either side of the fuel opening is required (see Figure 8.6).

- Raised Hearth Extension Framing
  The hearth framing must be constructed of non-combustible materials (such as metal framing or equivalent material) and topped with one HX4, or equivalent material (Table 8.2).
  When creating the platform, allow for the thickness of the non-combustible finishing materials (Figure 8.8).

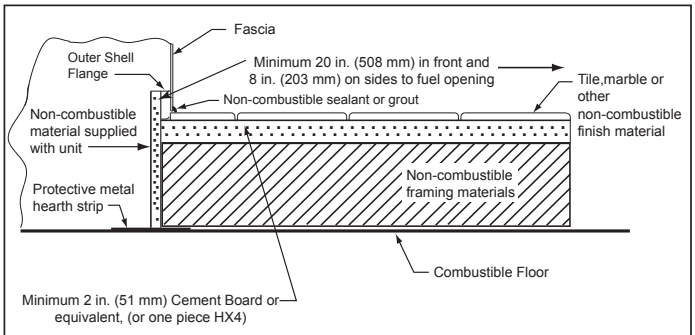

Note: For installations with vinyl flooring, special clearance recommendations apply.

Figure 8.8 Raised Hearth Extension to Bottom of Fascia

WARNING! Risk of Fire!

Hearth extensions are to be installed only as illustrated to prevent high temperatures from occurring on concealed combustible materials.

Vinyl Flooring

Vinyl Flooring is sensitive to heat. A 48 inch minimum depth hearth extension is recommended when using vinyl flooring up to the wall. See Figure 8.8.

Notice: Clearances that do not meet the minimum guidelines could result in damage or buckling to the vinyl flooring and is done at the installer's or homeowner's risk.

Hearth and Home Technologies does not recommend adhesive based vinyl flooring due to thermal expansion. Floating-style flooring can be used, but will reach temperatures up to 110°F in a room with ambient temperatures of 70°F. Consult flooring specifications to ensure compatibility.

E. Non-Combustible Sealant Material

- After completing the installation of non-combustible facing board in the required non-combustible zone and the non-combustible finishing material over that, remove the template.
- A bead of non-combustible sealant must be used to close off any gaps at the top and sides between the fireplace and non-combustible facing (Figure 8.9) to prevent cold air leaks and the risk of fire. Large gaps can be bridged with fiberglass rope gasket.
- When installation of the decorative material is complete, replace/install the fascia and fireplace doors.

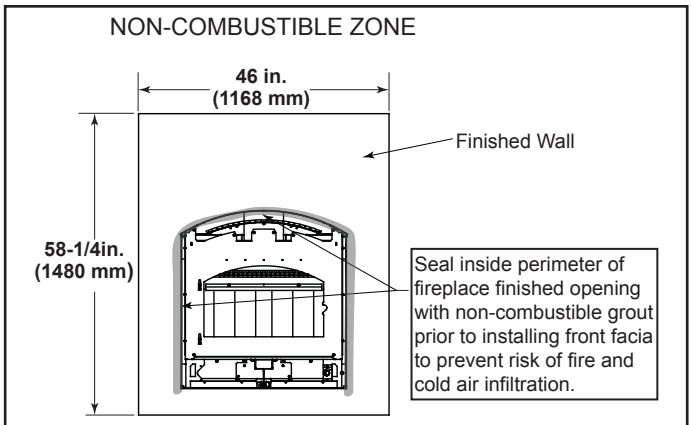

Figure 8.9

WARNING! Risk of Fire!

- *Maintain clearances.*
- *Use only non-combustible material below standoffs, material such as cement board is acceptable.*
- *Framing or finishing material used on the front of the fireplace closer than the minimums listed, must be constructed entirely of non-combustible materials (i.e., steel studs, concrete board, etc.).*

WARNING! Risk of Fire!

Hearth & Home Technologies is not responsible for discoloration, cracking or other material failures of finishing materials due to heat exposure or smoke.

- *Choose finishing materials carefully.*

WARNING! Risk of Fire!

Seal around finishing material to fireplace.

9 Fireplace Setup

A. Firebrick Placement

The firebox of your fireplace is lined with high quality fire-brick, which has exceptional insulating properties.

Do not use a grate; simply build a fire on the firebox floor.

Do not operate the fireplace without bricks. Make sure bricks are installed as shown.

IMPORTANT: Be certain you have the proper brick in the correct location. Measure the brick size for accuracy.

- Remove new brick set from box and lay out to diagram as shown in Figure 9.1.
- Lay bottom bricks in firebox.
- Install rear bricks on the top of the bottom bricks. Slide top of bricks under clip on back of firebox wall and push bottom of brick back.
- Install side bricks. Slide top of brick under clips on side of firebox and push the bottom of the brick until it is flush with the side of the firebox.

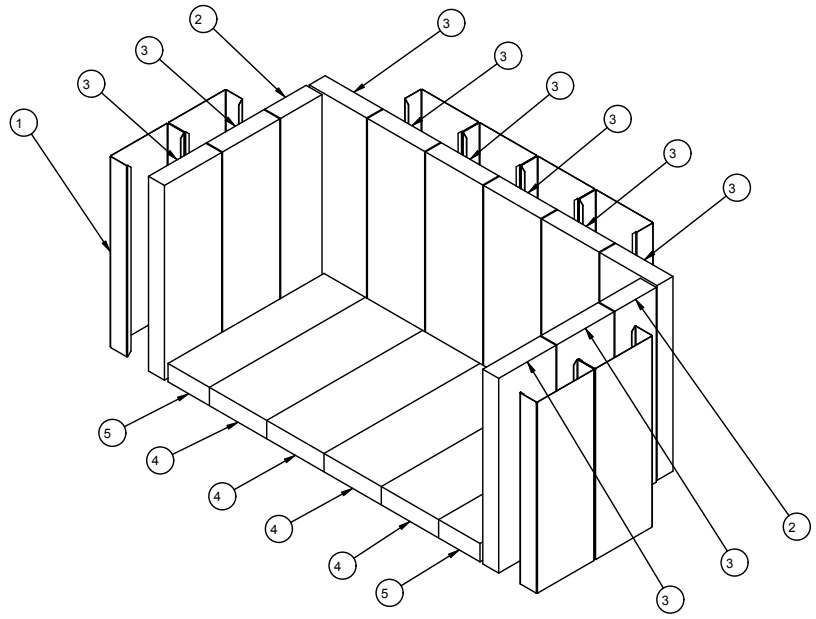

Figure 9.1 Fire Brick Configurations

Table 9.1

#	Brick Size	Qty. in Set
1	Brick Wrap	8
2	Firebrick 13.25 x 3.25	2
3	Firebrick 13.25 x 4.50 x 1.25	10
4	Firebrick 12.25 x 4.50	4
5	Firebrick 12.25 x 3.25	2

B. Baffle and Blanket Placement

Ensure correct baffle and baffle protection channel placement; replace baffle components if damaged or missing.

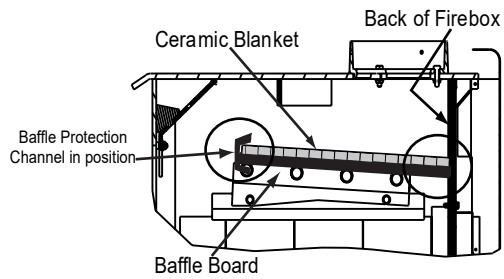

Figure 9.2

The ceramic blanket and baffle board MUST be in contact with the back of the firebox and even with each other in the front. The baffle protection channel MUST be in position.

C. Install Fascia (Fronts)

Front is required to complete the installation. Instructions for attachment of the front is included with it. Contact your local dealer with any questions on offerings or installation.

10 Reference Materials

A. Chimney Components

The following drawings show the SL-300 Series chimney and fireplace components which may be safely used with this fireplace. The 8 in. DuraPlus can also be used.

Catalog #	Description
CAK4A	Chimney Air Kit (shipped with fireplace)
ID4	Insulated Duct (used with chimney air kit)
UD4	Uninsulated Duct (used wth chimney air kit)
SL306	Chimney Section - 6 in. (152 mm) long
SL312	Chimney Section - 12 in. (305 mm) long
SL318	Chimney Section - 18 in. (457 mm) long
SL324	Chimney Section - 24 in. (610 mm) long
SL336	Chimney Section - 36 in. (914 mm) long
SL348	Chimney Section - 48 in. (1219 mm) long
CAS8	Attic Shield Kit
SL3	Chimney Stabilizer
SL315	Chimney Offset/Return - 15 deg
SL330	Chimney Offset/Return - 30 deg
FS338	Ceiling Firestop - Straight
FS339	Ceiling Firestop - 15 deg
FS340	Ceiling Firestop - 30 deg
AS8	SL300 Straight Attic Insulation Shield, 24 in. (610 mm) (shipped with fireplace)
JB877	Chimney Joint Band
CB876	Chimney Bracket
RF370	Roof Flashing - Flat to 6/12 Pitch
RF371	Roof Flashing - 6/12 to 12/12 Pitch
DTO134/146	Octogonal Decorative Caps
DTS134/146	Square Decorative Caps
ST375	Square Termination Cap
TCT375	Terra Cotta Termination Cap
TR344	Round Termination Cap
TR342-B	Round Telescoping Termination Cap
TR-TVK	TR Top Vent Kit
TS345	Square Termination Cap
TS345P	Square Termination Cap - Painted
12966A	Manufactured Home Thimble
MH841	Manufactured Home Thimble Extension 20 in./508 mm
HX4	Micore Hearth Extension, 20 in./508 mm wide
LDS33	Decorative Shroud - 3 ft x 3 ft (.91 m x .91 m)
LDS46	Decorative Shroud - 4 ft x 6 ft (1.22 m x 1.83 m)
LDS-BV	Decorative Shroud - 26 in. x 26 in. (660 mm x 660 mm)
	Field Constructed Shrouds (See “Woodburning Termination Cap”)
CT-3A-B	Adapter - May be used with the following caps
	CT Series
	DT Series
8DP-BP	Duraplus Base Plate (required if using DuraPlus Chimney)

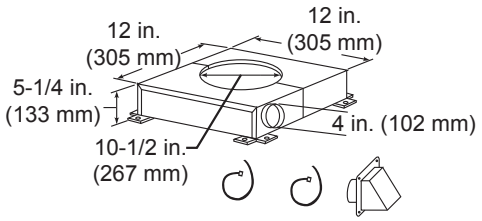

CAK4A Chimney Air Kit (shipped with fireplace)

ID4 Insulated Duct

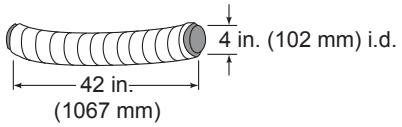

UD4 Uninsulated Duct

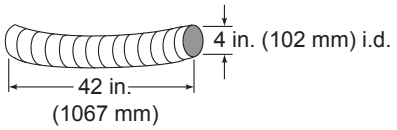

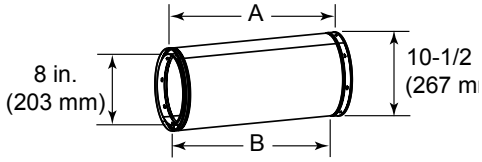

Catalog #	A		B	
	in	mm	in	mm
SL306	6	152	4-3/4	121
SL312	12	305	10-3/4	273
SL318	18	457	16-3/4	425
SL324	24	610	22-3/4	578
SL336	36	914	34-3/4	883
SL348	48	1219	46-3/4	1187

Attic Shield Kit

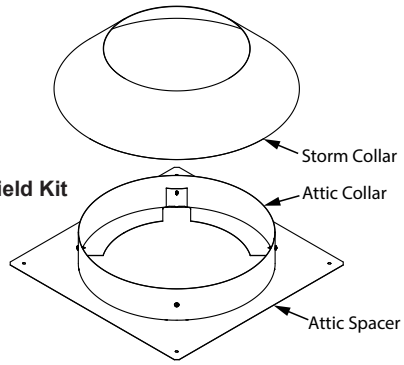

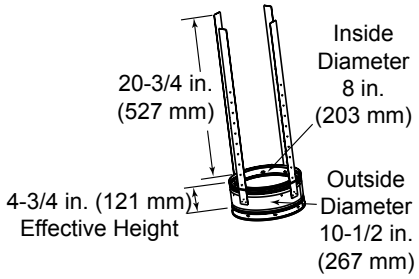

SL3 Chimney Stabilizer

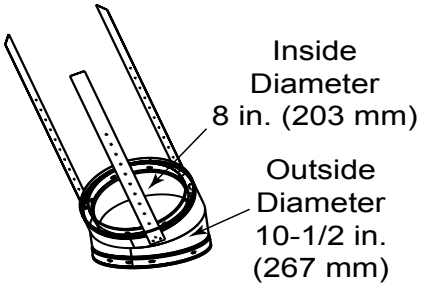

SL315 Chimney Offset/Return - Effective Height 13-3/8in. (340 mm)
SL330 Chimney Offset/Return - Effective Height 15-1/2in. (394 mm)

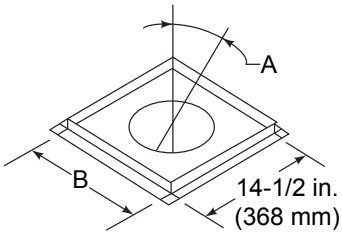

Firestop Spacer

Catalog #	A	B	
FS338	0-deg.	14-1/2 in.	368 mm
FS339	15-deg.	18-3/8 in.	467 mm
FS340	30-deg.	23 in.	584 mm

A = Actual Length
B = Effective length (length of chimney part after it has been snapped to another)

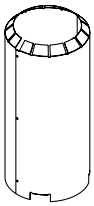

Assembled
Diameter: 14 1/2 in./368 mm
Height: 24 in./610 mm

AS8 SL300 Straight Attic Insulation Shield (shipped with unit)

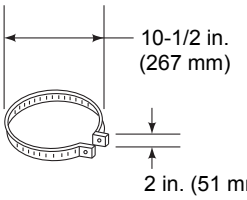

JB877 Chimney Joint Band

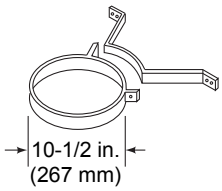

CB876 Chimney Bracket

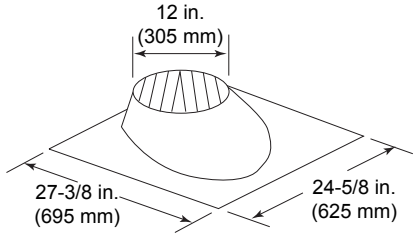

RF370 - Roof Flashing Flat to 6/12 Pitch

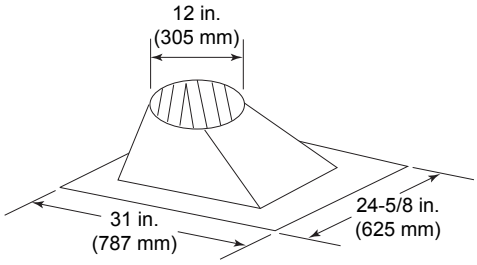

RF371 - Roof Flashing 6/12 to 12/12 Pitch

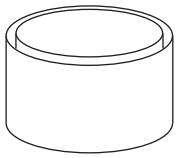

MH841 Manufactured Home Thimble Extension

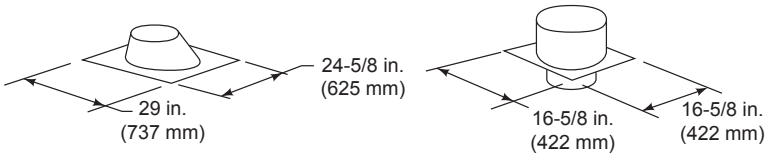

12966A Manufactured Home Thimble

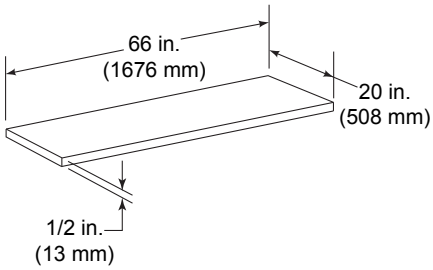

HX4 Micore Hearth Extension

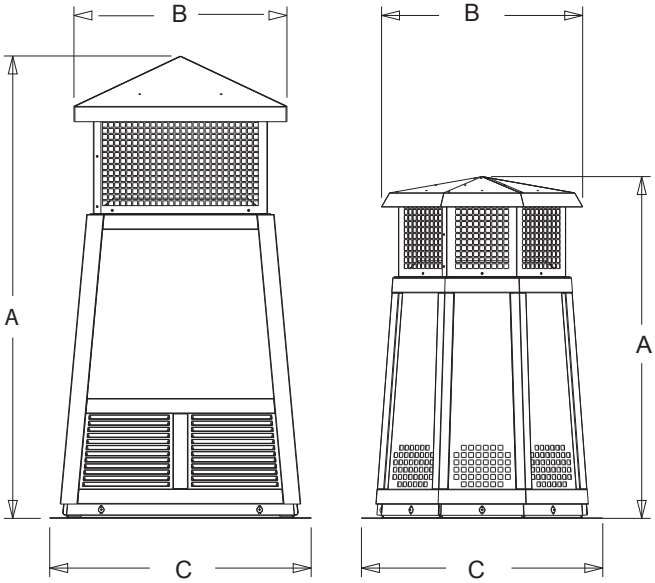

DTS134/DTS146 **DTO134/DTO146**
Decorative Caps

DTO134		A	B	C
	in	34	20	24
	mm	864	508	610
DTO146				
	in	46	22.7	26
	mm	1168	576	660

DTS134		A	B	C
	in	34	21.18	24
	mm	864	538	610
DTS146				
	in	46	21.18	26
	mm	1168	538	660

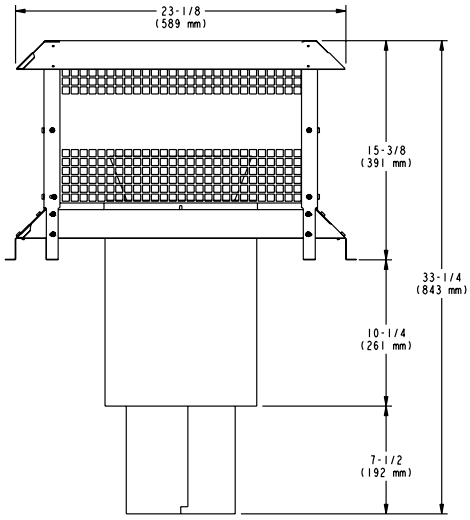

ST375 Square Termination Cap

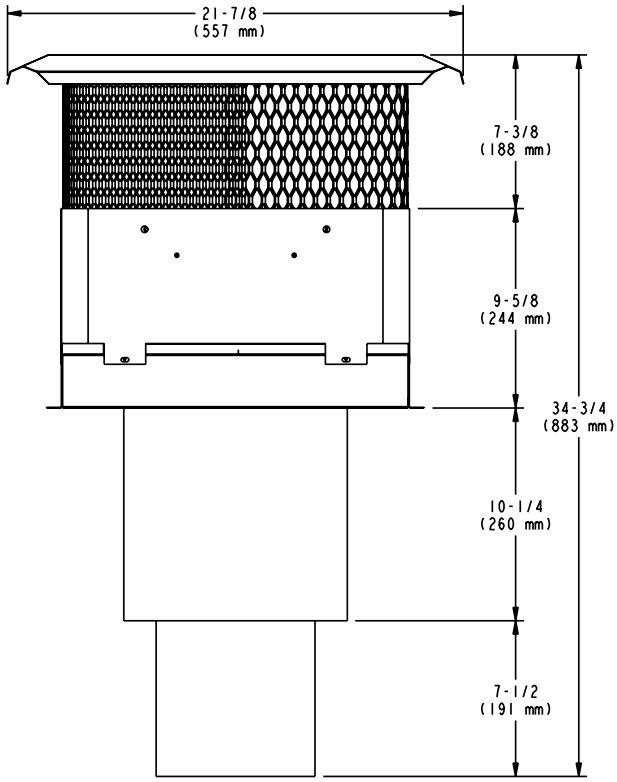

TCT375 Terra Cotta Cap

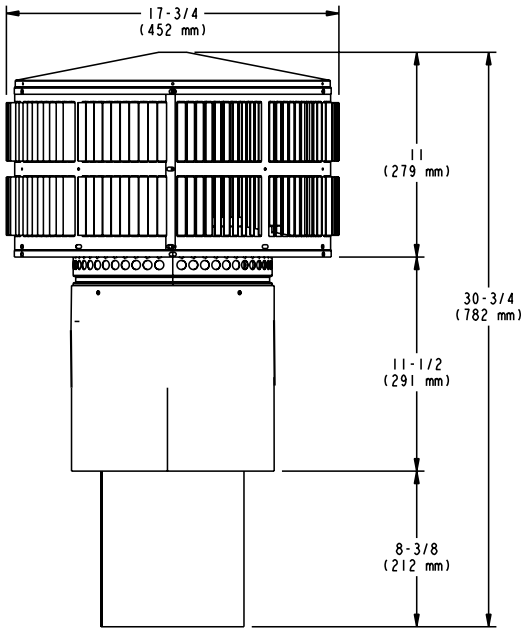

TR342-B Round Telescoping Termination Cap

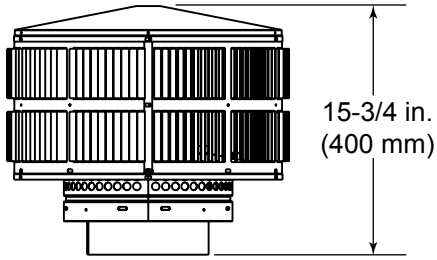

TR344 Round Termination Cap

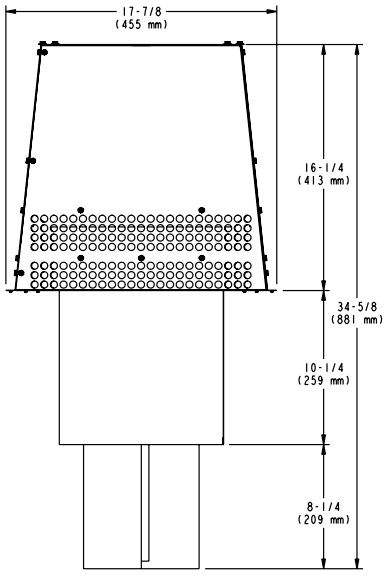

TS345/TS345P Square Termination Cap

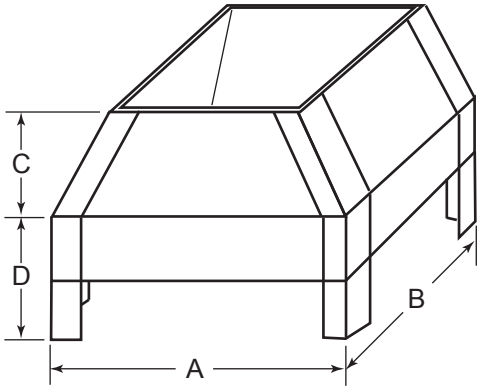

LDS33/LDS46 Decorative Shroud

Catalog #	A		B		C		D	
	in.	*mm*	*in.*	*mm*	*in.*	*mm*	*in.*	*mm*
LDS33	36	914	36	914	8.5	216	11	279
LDS46	48	1219	72	1829	8.5	216	11	279

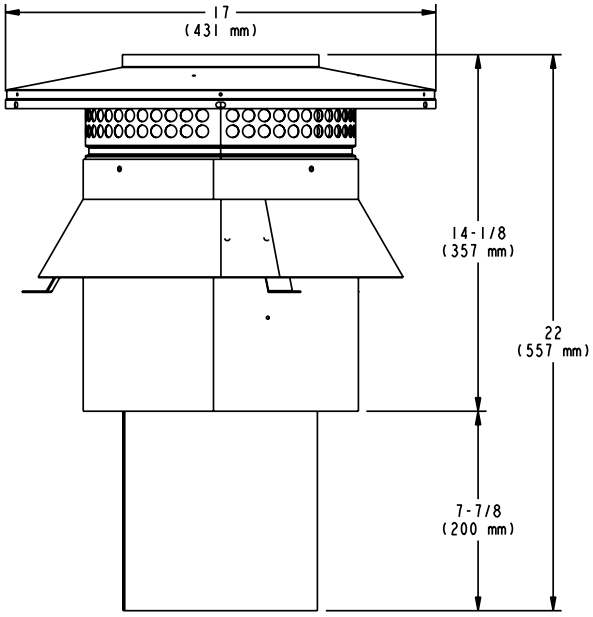

CT-3-B

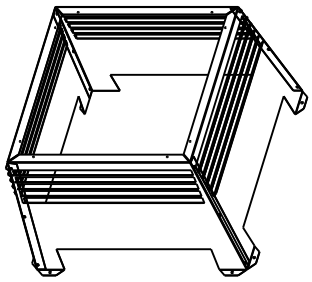

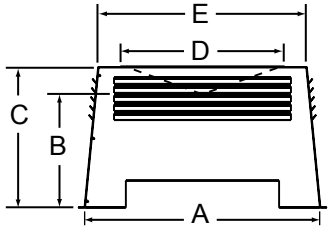

LDS-BV Decorative Shroud

Catalog #		A	B	C	D	E
LDS-BV	*in.*	26	12.5	15.5	22	23
	mm	660	318	394	559	584

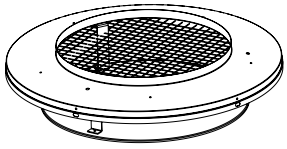

TR-TVK Top Vent Kit

DuraPlus Venting

Catalog #	Description
DV-8DP-BP	8" DuraPlus base plate
DV-8DP-E15	8" DuraPlus 15° elbow kit
DV-8DP-E30	8" DuraPlus 30° elbow kit
DV-8DP-E15KSS	8" DuraPlus 15° elbow kit (SS)
DV-8DP-E30KSS	8" DuraPlus 30° elbow kit (SS)
DV-8DP-WS	8" DuraPlus wall strap
DV-8DP-ES	8" DuraPlus elbow strap
DV-8DP-AWS	8" DuraPlus adjustable wall strap
DV-8DP-WSSS	8" DuraPlus wall strap (SS)
DV-8DP-FRS	8" DuraPlus firestop radiation shield
DV-8DP-XRB	8" DuraPlus extended roof bracket
DV-6DP-SC	6-8 Storm collar
DV-8DP-F6	8" DuraPlus flashing 0/12-6/12
DV-8DP-FF	8" DuraPlus flat roof flashing
DV-8DP-F12	8" DuraPlus flashing 7/12-12/12
DV-8DP-06	8x6 DuraPlus pipe
DV-8DP-09	8x9 DuraPlus pipe
DV-8DP-12	8x12 DuraPlus pipe
DV-8DP-24	8x24 DuraPlus pipe
DV-8DP-24SS	8x24 DuraPlus pipe (SS)
DV-8DP-36	8x36 DuraPlus pipe
DV-8DP-36SS	8x36 DuraPlus pipe (SS)
DV-8DP-VC	8" DuraPlus chimney cap
DV-6DP-IS	Attic Insulation Shield

B. Accessories

Lintel Bar
LINTEL BAR-HHT

Finishing Template
TMP-MED-ARC

Heat-Zone-WD-C

Outside Air Offset Adapter
OA-RD-6

Mesh-HHT-C Firescreen

C. Offset Diagrams

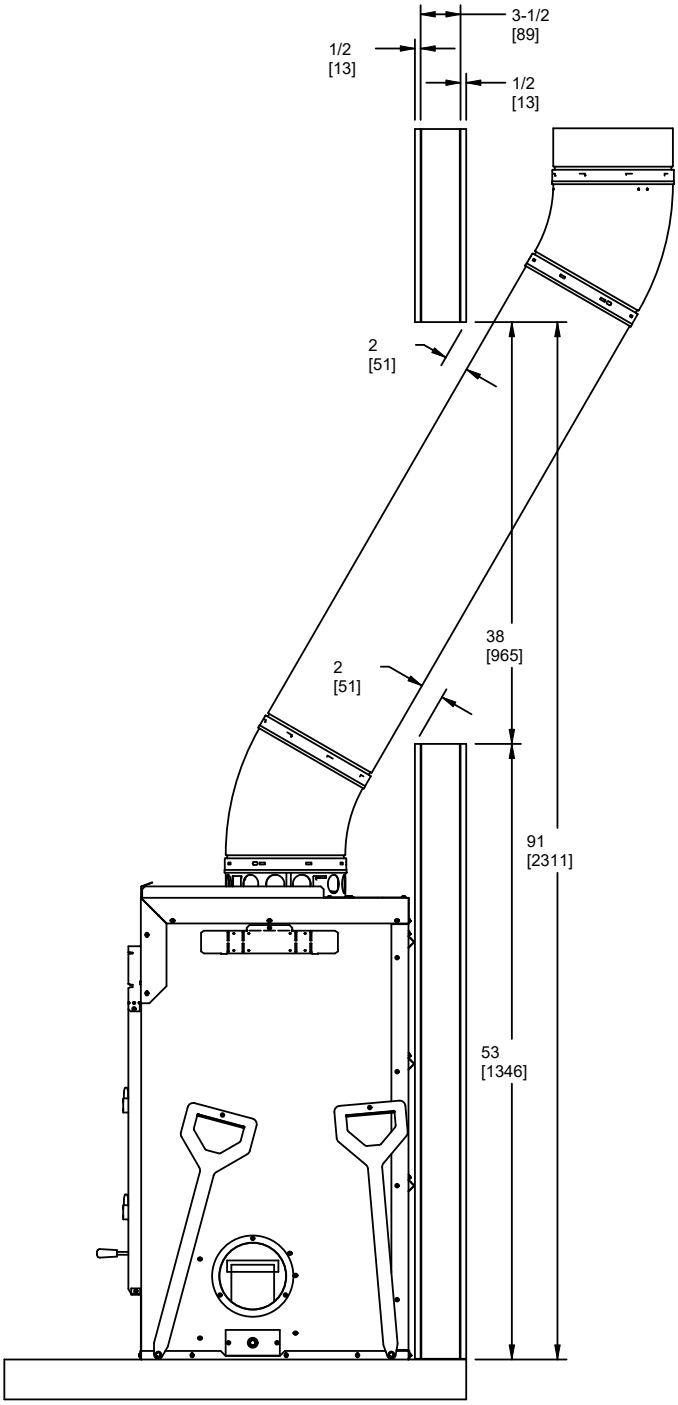

Offsest for 2x4 Wall Construction

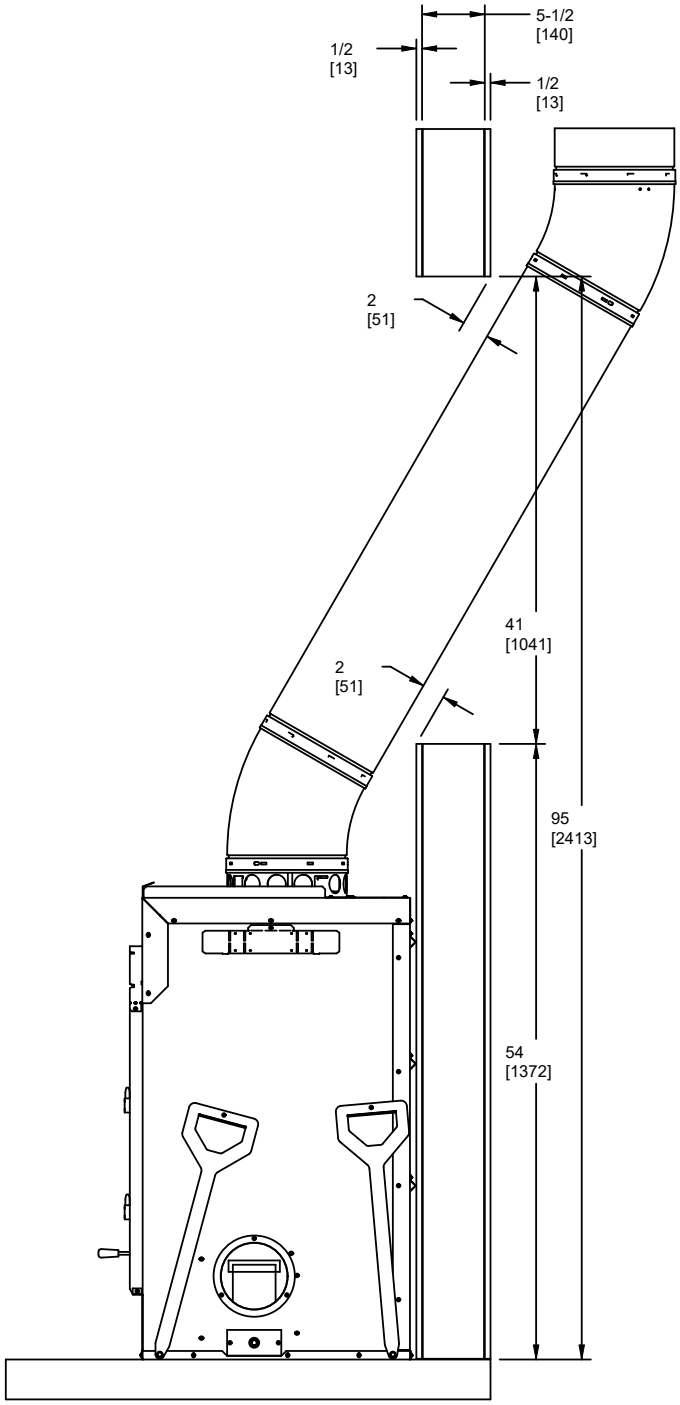

Offsest for 2x6 Wall Construction

Majestic, a brand of Hearth & Home Technologies
1915 West Saunders Street, Mount Pleasant, Iowa 52641
www.fireplaces.com

Please contact your Majestic dealer with any questions or concerns.
For the location of your nearest Majestic dealer, please visit www.fireplaces.com.