Unvented Gas Log Heater
or
Vented Decorative Appliance

Models: EYF18, EYF24

Natural Gas or Propane/LPG
Control Type: Manual or Millivolt

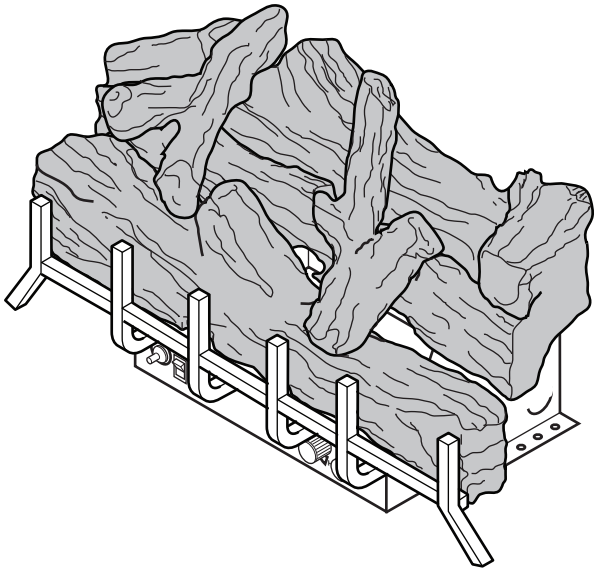

WARNINGS

If the information in this manual is not followed exactly, a fire or explosion may result causing property damage, personal injury or loss of life.

- **Do not store or use gasoline or other flammable vapors and liquids in the vicinity of this or any other appliance.**
- **WHAT TO DO IF YOU SMELL GAS**
  - **Do not try to light any appliance.**
  - **Do not touch any electrical switch; do not use any phone in your building.**
  - **Immediately call your gas supplier from a neighbor's phone. Follow the gas supplier's instructions.**
  - **If you cannot reach your gas supplier, call the fire department.**
- **Installation and service must be performed by a qualified installer, service agency or the gas supplier.**

Installation and Operating Instructions

This is an unvented gas-fired heater. It uses air (oxygen) from the room in which it is installed. Provisions for adequate combustion and ventilation air must be provided. Refer to Page 5.

INSTALLER: Leave this manual with the appliance.
CONSUMER: Retain this manual for future reference.

DESIGN CERTIFIED ®

MADE IN U.S.A.

CERTIFIED ®

Thank you and congratulations on your purchase of a Gas Log Set

PLEASE READ THE INSTALLATION AND OPERATION INSTRUCTIONS BEFORE USING THE APPLIANCE!

IMPORTANT: Read all instructions and warnings carefully before starting installation.

Failure to follow these instructions may result in a possible fire hazard and will void the warranty.

Important Safety Information **3**
Getting Started **5**
Product Features and Specifications **5**
Fireplace and Hearth Dimensions **6**
Placement in a Fireplace with a Restrictive Barrier **6**
Adequate Combustion Ventilation Air **7**
Clearances and Height Requirements **8**
Floor Clearance **10**
Fireplace Preparation **10**
Installing Vented Appliance **10**
Gas Line Connection **12**
Checking Gas Pressure **12**
Electrical Wiring (Millivolt) **13**
Connect Optional Remote Receiver **14**
Log Placement **15**
Flame Appearance **18**
Pilot Flame Appearance 18
Burner Flame Appearance 19
Operating Instructions **19**
For Your Safety Read Before Lighting 20
Manual Control Lighting Instructions 21
Millivolt Control Lighting Instructions 22
Match Lighting Instructions 23
Maintenance **23**
Troubleshooting **24**
▶ **Service Parts** **26**
Massachusetts Only **32**
▶ **Warranty** **33**

NOTE: Monessen vent free gas logs are hand painted for ultimate beauty and realism. As a result, some variation in color and shading will occur from set to set. This is intentional and designed to make each product unique, as found in nature.

CARBON MONOXIDE POISONING: Early signs of carbon monoxide poisoning are similar to the flu with headaches, dizziness and/or nausea. If you have these signs, the insert may not have been installed properly. Get fresh air at once! Have the insert inspected and serviced by a qualified service person. Some people are more affected by carbon monoxide than others. These include pregnant women, people with heart or lung disease or anemia, those under the influence of alcohol, and those at high altitudes.

Propane/LP gas and natural gas are both odorless. An odor-making agent is added to each of these gases. The odor helps you detect a gas leak. However, the odor added to these gases can fade. Gas may be present even though no odor exists.

INSTALLER

Please leave these instructions with the appliance.

OWNER

Please retain these instructions for future reference.

WARNING

- **Any change to this heater or its controls can be dangerous.**
- **Improper installation or use of the heater can cause serious injury or death from fire, burns, explosion or carbon monoxide poisoning.**
- **Do not allow fans to blow directly into the fireplace. Avoid any drafts that alter burner flame patterns.**
- **Do not use a blower insert, heat exchanger insert or other accessory, not approved for use with this heater where applicable.**

1. Due to high temperatures, the appliance should be located out of traffic and away from furniture and draperies.
2. Children and adults should be alerted to the hazard of high surface temperature and should stay away to avoid burns or clothing ignition.
3. Young children should be carefully supervised when they are in the same room with the appliance.
4. Do not place clothing or other flammable material on or near the appliance.
5. Any safety screen or guard removed for servicing an appliance, must be replaced prior to operating the heater.
6. Installation and repair should be done by a qualified service person.
7. To prevent malfunction and/or sooting, an unvented gas heater should be cleaned before use and at least annually by a professional service person. More frequent cleaning may be required due to excessive lint from carpeting, bedding materials, etc. It is imperative that control compartments, burners and circulating air passageways be kept clean.
8. For propane/LP insert, do not place propane/LP supply tank(s) inside any structure. Locate propane/LP supply tank(s) outdoors. To prevent performance problems, do not use propane/LP fuel tank of less than 100 lbs. capacity.
9. The installation must conform with local codes or, in the absence of local codes, with the **National Fuel Gas Code, ANSI Z223.I/NFPA54.**
10. This unit complies with the latest edition of ANSI Z21.11.2, Unvented Heaters and also complies with ANSI Z21.60 Decorative Vented Appliances for Solid Fuel Burning Fireplaces. State and local codes may only allow operation of this appliance in a vented configuration. Check your state or local codes. For vented operation, see *Vented Instructions* in this manual.
11. Do not install the heaters in a bathroom or bedroom.
12. Correct installation of the ceramic fiber logs, proper location of the heater, and annual cleaning are necessary to avoid potential problems with sooting. Sooting, resulting from improper installation or operation, can settle on surfaces outside the fireplace. See log placement instructions for proper installation.
13. Avoid any drafts that alter burner flame patterns. Do not allow fans to blow directly into fireplace. Do not place a blower inside burn area of firebox. Ceiling fans may create drafts that alter burner flame patterns. Sooting and improper burning will occur.
14. **CAUTION:** Candles, incense, oil lamps, etc. produce combustion by-products including soot. Vent-free appliances will not filter or clean soot produced by these types of products. In addition, the smoke and/or aromatics (scents) may be reburnt in the vent-free appliance which can produce odors. It is recommended to minimize the use of candles, incense, etc. while the vent-free appliance is in operation.
15. This is an unvented gas-fired heater. It uses air (oxygen) from the room in which it is installed. Provisions for adequate combustion and ventilation air must be provided. *Page 6*
16. This heater shall not be installed in a room or space unless the required volume of indoor combustion air is provided by the method described in the *National Fuel Gas Code, ANSI Z223.1/NFPA 54*, the *International Fuel Gas Code* or applicable local codes.
17. Keep room area clear and free from combustible materials, gasoline and other flammable vapors and liquids.
18. Unvented gas heaters are a supplemental zone heater. They are not intended to be a primary heating appliance. Water vapor produced by an unvented heater can create moisture problems in a home when operated for extended periods of time.
19. During manufacturing, fabricating and shipping, various components of this appliance are treated with certain oils, films or bonding agents. These chemicals are not harmful but may produce annoying smoke and smells

as they are burned off during the initial operation of the appliance; possibly causing headaches or eye or lung irritation. This is a normal and temporary occurrence.

The initial break-in operation should last two to three hours with the burner at the highest setting. Provide maximum ventilation by opening windows or doors to allow odors to dissipate. Any odors remaining after this initial break-in period will be slight and will disappear with continued use.

20. Input ratings are shown in BTU per hour and are for elevations up to 2,000 feet. For elevations above 2,000 feet, input ratings should be reduced 4 percent for each 1,000 feet above sea level. See the National Fuel Gas Code.
21. The heater and its individual shutoff valve must be disconnected from the gas supply piping system during any pressure testing of that system at test pressures in excess of 1/2 psig (3.5 kPa).
22. The heater must be isolated from the gas supply piping system by closing its individual manual shutoff valve during any pressure testing of the gas supply piping system at test pressures equal to or less than 1/2 psig (3.5 kPa).
23. Do not use this room heater if any part has been under water. Immediately call a qualified service technician to inspect the room heater and to replace any part of the control system and any gas control which has been under water.
24. This appliance must not be used with glass doors in the closed position. This can lead to pilot outages and severe sooting outside the fireplace.
25. Never burn solid fuels in a fireplace where a unvented room heater is installed.
25. Always have a fireplace screen in place when the appliance is in operation and , unless other provisions for combustion air are provided, the screen shall have an opening(s) for induction of combustion air.

CODES

Adhere to all local codes or, in their absence, the latest edition of THE NATIONAL FUEL GAS CODE ANSI Z223.1 or NFPA54 which can be obtained from…

American National Standards Institute, Inc.
1430 Broadway
New York, NY 10018

or

National Fire Protection Association, Inc.
Batterymarch Park
Quincy, MA 02269

Attention Massachusetts Residents:
This product must be installed by a licensed gas fitter.

This appliance may be installed in an after-market, permanently located, manufactured (mobile) home, where not prohibited by local codes.

This appliance is only for use with the type of gas indicated on the rating plate. This appliance is not convertible for use with other gases.

WARNING

Never connect unit to private (non-utility) gas wells. This gas is commonly known as wellhead gas.

NATIONAL FIREPLACE INSTITUTE® NFI CERTIFIED www.nficertified.org

We recommend that our gas hearth products be installed and serviced by professionals who are certified in the U.S. by the National Fireplace Institute® (NFI) as NFI Gas Specialists.

WARNING

If the area in which the heater may be operated does not meet the required volume for indoor combustion air, combustion and ventilation air shall be provided by one of the methods described in the *National Fuel Gas Code, ANSI Z223.1/NFPA 54*, the *International Fuel Gas Code* or applicable local codes.

⚠ WARNING: This product and the fuels used to operate this product (liquid propane or natural gas), and the products of combustion of such fuels, can expose you to chemicals including benzene, which is known to the State of California to cause cancer and reproductive harm. For more information go to: www.P65Warnings.ca.gov.

WARNING

- **Gloves are recommended when handling ceramic fiber logs to prevent skin irritation from loose fibers.**
- **Logs are fragile - handle with care.**

MAKE SURE YOU HAVE RECEIVED ALL PARTS:

Check your packing list to verify that all listed parts have been received. You should have the following:

- Unvented gas log burner assembly
- Plastic bag containing crushed volcanic rock
- Installation/operating instructions
- Two (2) anchoring screws
- Grate

The millivolt controlled version of this heater is the only style designed to be operated with optional devices for ON/OFF functions. The following options may be used with the millivolt controlled heater. These options are not packaged with the log set.

- Hand held Remote with receiver
- Wall thermostat with 15' wire
- Wall switch with 15' wire
- Hand held Thermostat Remote with receiver

Carefully inspect the contents for shipping damage. If any parts are missing or damaged, immediately inform the dealer from whom you purchased the appliance. **Do not attempt to install any part of the appliance unless you have all parts in good condition.**

WHAT YOU WILL NEED FOR INSTALLATION:

You must have the following items available before proceeding with installation:

- External regulator (for propane/LPG and 1/2 lb. natural gas systems only)
- Piping which complies with local codes
- Screwdriver
- Drill with 5/32 bit
- Manual shutoff valve
- Pipe sealant approved for use with propane/LPG (Resistant to sulfur compounds)
- Pipe wrench or appropriate size crescent wrench set
- Tee joint.
- Sediment trap

GAS PRESSURES

Control	Fuel	Manual	Millivolt
Regulator Pressure	Nat.	4.0” w.c.	3.5” w.c.
Pilot Regulator	Nat.	n/a	3.5” w.c.
Max. Inlet Pressure	Nat.	10.5” w.c.	10.5” w.c.
Min. Inlet Pressure	Nat.	5.0” w.c.	5” w.c.
Regulator Pressure	LP	10.0” w.c.	10.0” w.c.
Max. Inlet Pressure	LP	13.0” w.c.	13.0” w.c.
Min. Inlet Pressure	LP	11.0” w.c.	11.0” w.c.

***NOTE:** An external regulator is required to reduce supply pressure to a maximum of 13” w.c.

GAS SPECIFICATIONS

			Gas Rate	
			Max.Input	Min. Input
Model	Fuel	Control	BTU/h	BTU/h
EYF18NM	Nat.	Manual	30,000	18,000
EYF18NV	Nat.	Millivolt	30,000	26,000
EYF18PM	LP	Manual	30,000	22,500
EYF18PV	LP	Millivolt	30,000	24,500
EYF24NM	Nat.	Manual	36,000	19,000
EYF24NV	Nat.	Millivolt	36,000	24,000
EYF24PM	LP	Manual	36,000	25,000
EYF24PV	LP	Millivolt	36,000	29,000

IGNITION CONTROLS

Piezo ignitor allows ignition of the pilot without the use of matches or batteries.

Manual control has three (3) positions:

OFF - All gas to the gas logs is shut off at the valve.
IGN - Valve position to light/maintain a standing pilot.
HI/LOW - Variable position corresponding to desired flame height (heat input)

Millivolt control has four (4) positions:

OFF - All gas to the gas logs is shut off at the valve.
IGN - Valve position to light/maintain a standing pilot.
ON - Valve position to turn ON/OFF log set with remote switch/thermostat.
HI/LOW - Variable position to control flame height (heat output).

PILOT

The gas log heater is fitted with a specially designed safety pilot light (ODS assembly) which senses the amount of oxygen available in the room and shuts the gas log heater off if the oxygen level begins to drop below a satisfactory level. The pilot can only be relit when adequate fresh air is available.

THERMAL GENERATOR

The millivolt gas log pilot is fitted with a millivolt generator to provide power for remote activation.

WARNING

This appliance has been specifically tested and design certified for installation only in a solid-fuel burning fireplace including factory-built UL127 fireplaces and masonry fireplaces, or in a listed ventless firebox (see below).

***Exception:* DO NOT install this appliance in a factory-built fireplace that includes instructions stating that it has not been tested or should not be used with unvented gas logs.**

Use manufacturer's installation and clearance requirements as defined in their manual.

The EYF Series unvented room heater is approved for installation into the following unvented fireplaces:

GCUF(32,36,42) and VFR(32,36,42) Series Fireboxes

The EYF Series unvented room heater may also be installed into a Ventless Firebox Enclosure for Gas Fired Decorative Type Unvented Room Heaters per ANSI Z21.91b.2004, as long as firebox hearth dimensions meet the minimum hearth dimensions shown below.

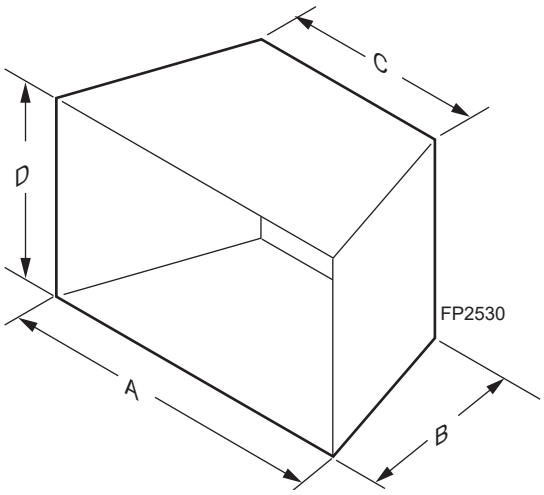

Model	A	B	C	D
EYF18	25" (635 mm)	13" (330 mm)	17½" (445 mm)	17" (433 mm)
EYF24 w/ EYF24-(R,F)	29" (737 mm)	13" (330 mm)	19½" (495 mm)	17" (433 mm)
EYF24 w/ EYF30-R	33" (838 mm)	13" (330 mm)	25¼" (641 mm)	17" (433 mm)

Figure 1 -
Hearth Minimum Dimension for Solid Fuel Burning Fireplaces and UL127 Factory Built Fireplaces

WARNING

Barriers such as the bottom of a glass door frame placed in front of a gas log set can change the air flow characteristics of the fireplace which in turn can cause the unit to overheat and malfunction.

IMPORTANT INFORMATION FOR THE INSTALLATION OF THIS GAS LOG SET IN A FIREPLACE WITH A RESTRICTIVE BARRIER

The following are guidelines for placing a gas log set in a fireplace that has a restrictive barrier along the bottom front opening of the fireplace. Some examples of barriers are glass/screen door frames and sunken/recessed fireplaces.

Height of Restriction (x)	Minimum Depth of Fireplace/Firebox
No Restriction	13"
1/2" to 1½"	16"
Greater than 1½" to 3"	16"
Greater than 3"	*

*Any barrier greater than 3" placed in front of the gas log set is not recommended by the manufacturer.

NOTE: Non combustible material such as refractory brick may be used to line the floor of the fireplace in order to raise the height of the gas log set in relation to a restrictive barrier. If the unit is raised, the minimum height dimension listed in the homeowner's manual must not be exceeded.

NOTE: If the log set is equipped with a remote receiver, a restrictive barrier may reduce the battery life by increasing the ambient temperature inside the fireplace. Placement of the receiver outside of the fireplace will extend the battery life.

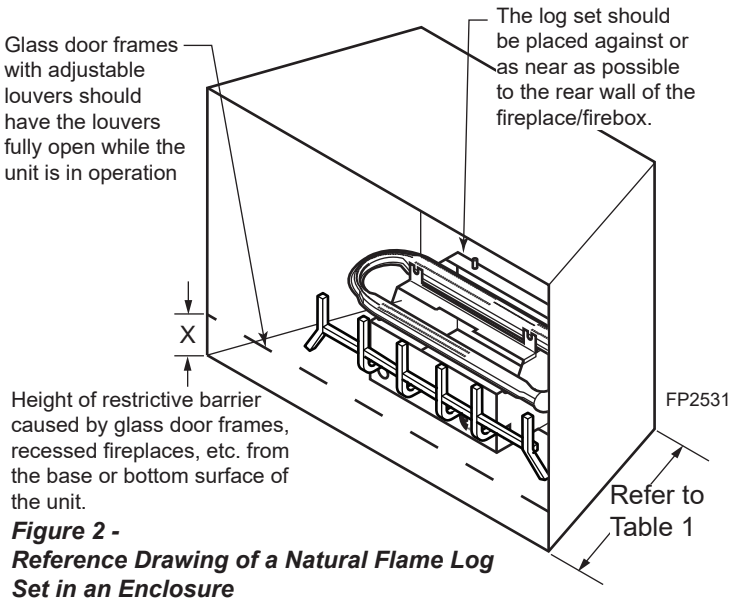

Figure 2 -
Reference Drawing of a Natural Flame Log Set in an Enclosure

ADEQUATE COMBUSTION VENTILATION AIR

This heater shall not be installed in a confined space or unusually tight construction unless provisions are provided for adequate combustion and ventilation air.

The National Fuel Gas Code, (ANSI Z223.1/NFPA54), defines a confined space as a space whose volume is less than 50 cubic feet per 1,000 BTU per hour (4.8m^3 per kw) of the aggregate input rating of all appliances installed in that space, and an unconfined space as a space whose volume is not less than 50 cubic feet per 1,000 BTU per hour (4.8 m^3 per kw) of the aggregate input rating of all appliances installed in that space. Rooms communicating directly with the space in which the appliances are installed, through openings not furnished with doors, are considered a part of a confined space.

Unusually tight construction is defined as construction where:

a. Walls and ceilings exposed to the outside atmosphere have a continuous water vapor retarder with a rating of 1 perm (6 x 10^{11} kg per pa/sec-m^2) or less with openings gasketed or sealed, and
b. Weather stripping has been added to windows and doors, and
c. Caulking or sealants are applied to areas such as joints around window and door frames, between sole plates and floors, between wall-ceiling joints, between wall panels, at penetrations for plumbing, electrical and gas lines and other openings.

The following formula can be used to determine the maximum heater rating per the definition of unconfined space:

$$\text{BTU/Hr} = \frac{(L_1 + L_2)\ \text{Ft} \times (W)\ \text{Ft} \times (H)\ \text{Ft}}{50}$$

Consider two connecting rooms with an open area between, with the following dimensions:

$L_1 = 15\,{}^1/_2$ Ft., $L_2 = 12$ Ft., W = 12 Ft., H = 8 Ft.

$$\text{BTU/Hr} = \frac{(15\,{}^1/_2 + 12) \times (12) \times (8)}{50}$$

If there were a door between the two rooms the calculation would be based only on the room with the heater.

$$\text{BTU/Hr} = \frac{(15\,{}^1/_2) \times (12) \times (8)}{50}$$

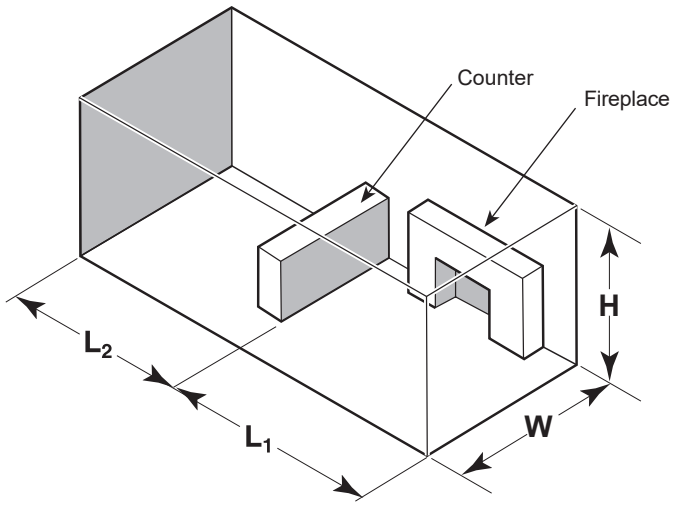

Figure 3

WARNING

If the area in which the heater may be operated does not meet the required volume for indoor combustion air, combustion and ventilation air shall be provided by one of the methods described in the *National Fuel Gas Code, ANSI Z223.1/NFPA 54*, the *International Fuel Gas Code* or applicable local codes.

CLEARANCE and HEIGHT REQUIREMENTS

WARNING

The dimensions shown in *Figures 4 through 10* and defined in the fireplace manufacturer's instructions are minimum clearances to maintain when installing this heater. Left and right clearances are determined when facing the front of the heater.

When heater is installed into a ventless firebox, minimum clearances, as specified by the ventless firebox manufacturer, must be met.

Follow these instructions carefully to ensure safe installation. Failure to follow instructions exactly can create a fire hazard.

Sidewall and ceiling clearances: The ***sides*** of the fireplace opening must be ***at least 16"*** from any combustible wall. The ***ceiling*** must be ***at least 42"*** from the top of the fireplace opening.

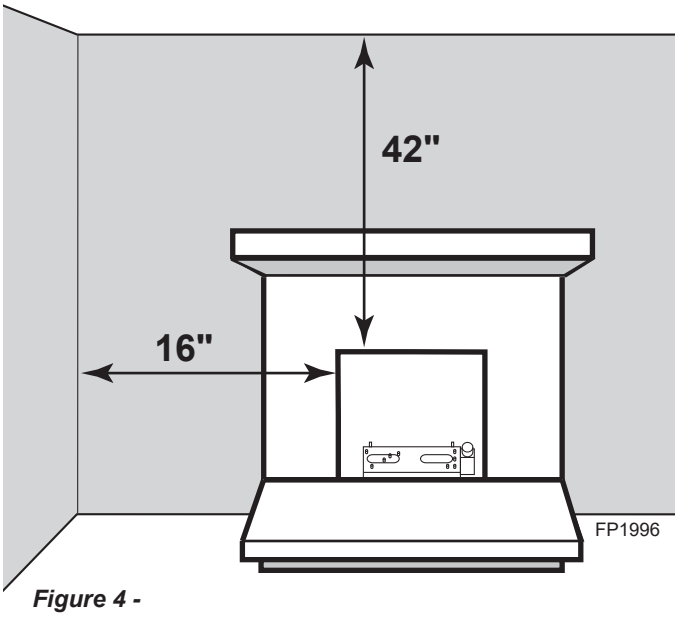

Figure 4 -
Sidewall and Ceiling Clearances

Heat resistant material (minimum requirements) with no wooden mantel or other combustible projection:

To install the gas logs into a fireplace with no wooden mantel, shelf or other combustible projection above the fireplace opening, measure the heat resistant material height, *per Figure 5, then see* ***TABLE A.***

Heat resistant materials such as slate and marble must **be at least ½" thick. Sheet metal should not be installed onto combustible material.**

IMPORTANT: If you cannot meet these minimum clearances you must operate the heater with chimney flue damper open. *See Installing Vented Appliances* found on *page 10*.

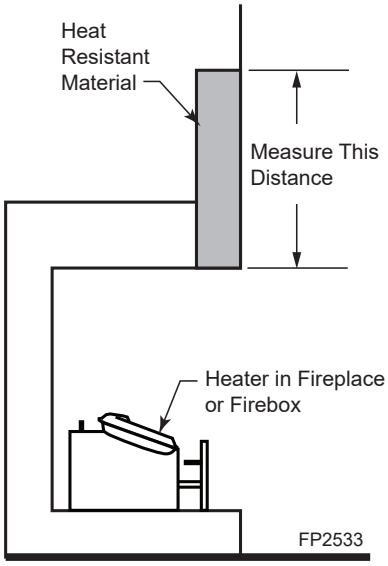

Figure 5 -
Mantel Clearance without Hood

Table A -
Heat Resistant Material Requirements with No Mantel or Combustible Projection

Heat Resistant Material Measurement	EYF24/18 Requirements for Safe Installation
12" or more	Hood not required.
8" to less than 12"	Extend heat resistant material to at least 12" or install hood. Figure 4
Less than 8"	Extend heat resistant material to 8" AND install hood. Fig. 4. OR extend heat resistant material to a height of at least 12".

Heat resistant material (minimum requirements) with wooden mantel or other combustible projection: To install the heater with a wooden mantel, shelf or other combustible projection above, first measure the heat resistant material shown in Figure 6, then refer to Table B.

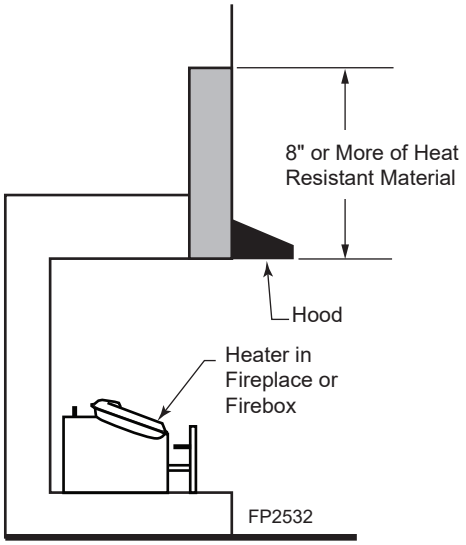

Figure 6 -
Mantel Clearance with Hood

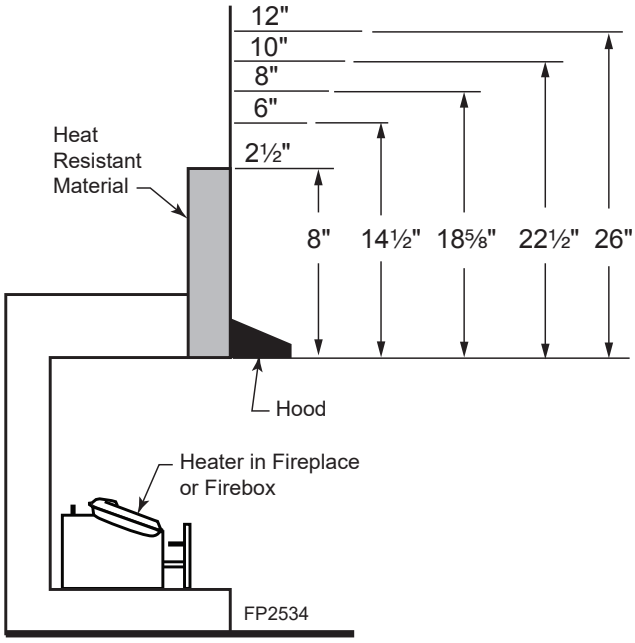

Figure 7 -
Minimum Mantel Clearance with Hood

Example: A mantel may project from the wall a **maximum** of 2½" at a **minimum** of 8" above the opening and a **maximum** of 6" at a **minimum** of 14½" above the opening.

Table B -
Heat Resistant Material Heights and Mantel Location

Heat Resistant Material Measurement	EYF24/18 Requirements for Safe Installation with Wooden Mantel, Shelf or Other Combustible Projection
12" or more	Hood not required. Observe profiles (side elevations) shown in Figure 6.
8" to less than 12"	Install hood (CABR/CABL) and refer to *Figure 6*; **OR** extend heat resistant material to at least 12" and observe profiles.
Less than 8"	Extend heat resistant material to at least 8", install hood and observe profiles shown in Figure 7 **OR** extend heat resistant material to 12" and observe profiles shown in Figure 7

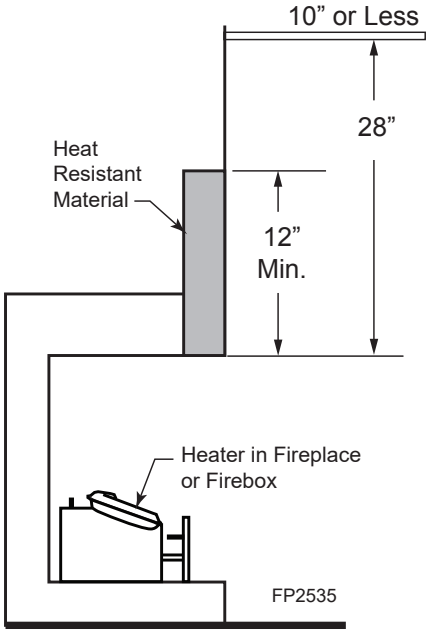

Figure 8 -
Minimum Mantel Clearance with No Hood

Example: The bottom of the mantel may project from the wall a **maximum** of 10" at a **minimum** of 28" above the opening.

FLOOR CLEARANCE

The gas log heater must be installed at least 5" above any combustible flooring material, such as carpeting or tile, which is closer than 14" to the base of the fireplace. The minimum distance must be maintained from the top surface of carpeting, tile, etc. *Figure 9*

OR,

The gas log heater may be installed nearer to the floor if a minimum of 14" of noncombustible material such as slate or marble is installed between the base of the fireplace and the combustible flooring. *Figure 10*

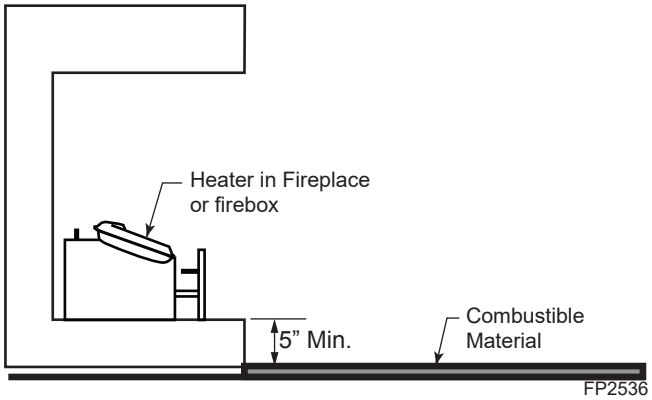

Figure 9 -
Minimum Clearance Above Combustible Flooring

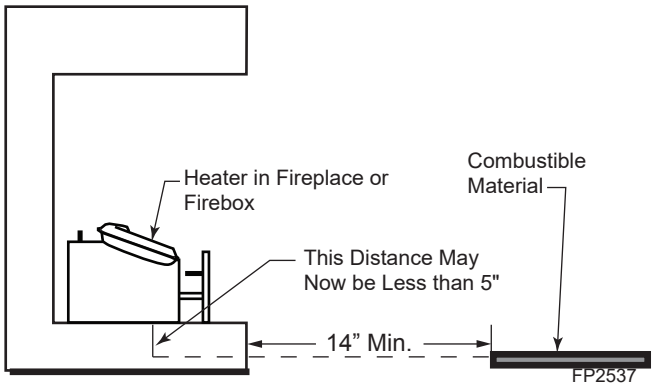

Figure 10-
Minimum Clearance above Combustible Flooring with Noncombustible Material Installed at Base of Fireplace

FIREPLACE PREPARATION

WARNING

Before installing in a solid fuel burning fireplace, The chimney flue and firebox must be cleaned of soot, creosote, ashes and loose paint by a qualified chimney cleaner.

WARNING

This appliance is for installation only in a solid fuel burning fireplace (masonry fireplace or manufactured fireplace) with a working flue and constructed of noncombustible material.

***Exception:* DO NOT install this appliance in a factory-built fireplace that includes instructions stating that it has not been tested or should not be used with unvented gas logs.**

BEFORE FULLY INSTALLING THE UNIT:

- Turn **OFF** the gas supply to the fireplace or firebox.
- Seal any fresh air vents and/or ash clean-out doors located on the floor or wall of the fireplace. If left unsealed, drafting may cause pilot outage or sooting. Use a heat resistant sealant. **Do not seal the chimney flue damper.**

INSTALLING VENTED APPLIANCES

Manual and millivolt controlled gas logs may be installed as a vented decorative log set in compliance with ANSI Z21.60 and National Fuel Gas Code, Section 6.6 Since, the gas logs are operated with the damper open, non-combustible material and minimum mantel requirements do not apply.

► **NOTE**: The use of a thermostat is prohibited in vented log applications.

BEFORE INSTALLING THE APPLIANCE:

- Turn off gas supply to fireplace or firebox.
- Have the fireplace floor and chimney professionally cleaned to remove ashes, soot, creosote or other obstructions. Have this cleaning performed annually after installation.

- Seal any fresh air vents or ash clean-out doors located on floor or wall of fireplace. If not, drafting may cause pilot outage or sooting. Use a heat-resistant sealant. Do not seal chimney flue damper.

Install and operate the appliance as directed in this manual.

DAMPER STOP INSTALLATION:

A damper stop must be provided with the unit. Contact your dealer to obtain one. The damper stop must be installed as shown in *Figure 10* to prevent full closure of the fireplace damper blade and provide a minimum 29 square inch flue opening.

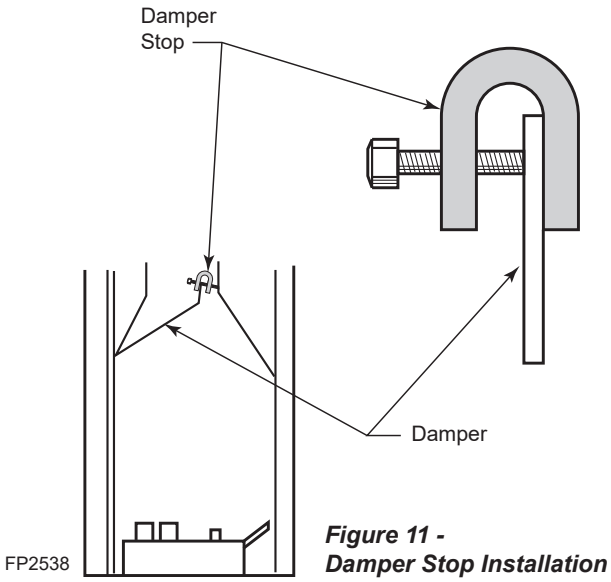

Figure 11 - Damper Stop Installation

WARNING

The fireplace and gas logs function as a system. If the fireplace is spilling into the room (check with a match or a smoke stick), reposition the damper clamp until a positive draft is obtained by opening the damper. If negative pressure in home prevents having a positive draft, contact your dealer for assistance.

PLACE and SECURE APPLIANCE

ASSEMBLY PROCEDURE:

Figure 12

1. Center the gas log unit in the fireplace or firebox.
2. **Install Grate:** Insert longest middle grate bar in one of the two square holes in control panel. Be sure grate is centered. Sit horizontal bar inside two (2) hooks on front of control panel. Make certain front feet of grate are located inside front edge of fireplace or firebox.
3. Anchor holes are located on the flange of the unit. After centering the burner correctly, mark the hole positions on the fireplace/firebox floor. Drill two (2) 5/32" diameter holes approximately 1½" deep.
4. Anchor the unit to the fireplace/firebox floor using the screws provided.

WARNING

You must secure the gas log heater to the fireplace floor. If not, the entire unit may move when you adjust the controls. Movement of unit may cause shifting of the gas logs which leads to sooting and improper burning.

Special care is required if you are installing the unit into a sunken fireplace. You must raise the fireplace floor to allow access to gas log controls. This will insure adequate air flow and guard against sooting. Raise the fireplace floor using noncombustible materials, as described in *Placement in a Fireplace with Restrictive Barrier on Page 6*.

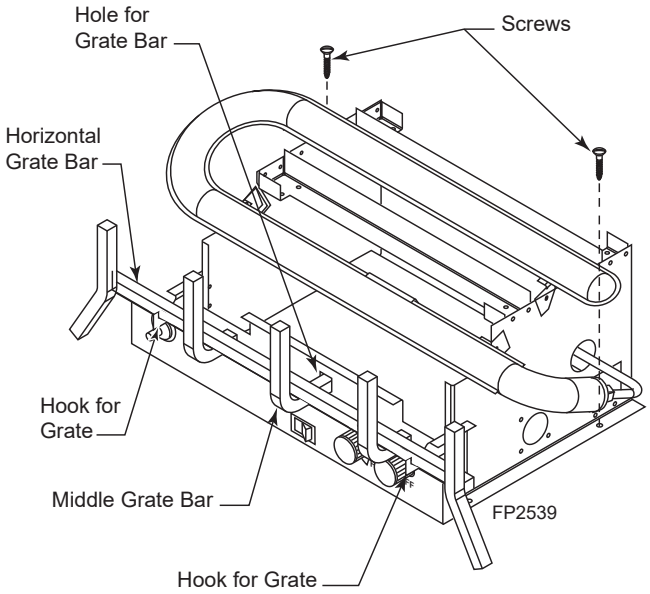

Figure 12 - Install Grate and Secure Heater to Floor of Fireplace/Firebox

WARNING

Use new black iron or steel pipe. Internally tinned copper or copper tubing can be used per National Fuel Code, section 2.6.3, providing gas meets hydrogen sulfide limits, and where permitted by local codes. Gas piping system must be sized to provide minimum inlet pressure (Listed on Data Plate) at the maximum flow rate (BTU/Hr). Undue pressure loss will occur if the pipe is too small.

A manual shutoff valve must be installed upstream of the appliance. Union tee and plugged 1/8" NPT pressure tapping point should be installed upstream of the appliance. *Figure 13*

NOTICE: A qualified gas appliance installer must connect the heater to the gas supply. Consult all local codes.

IMPORTANT: Hold heater valve firmly with a wrench to prevent movement when connecting to inlet pipe.

Always use an external regulator for all propane/LPG heaters and high pressure one to two-pound systems only, to reduce the supply tank pressure to a maximum of 13" w.c. This is in addition to the internal regulator in the heater valve.

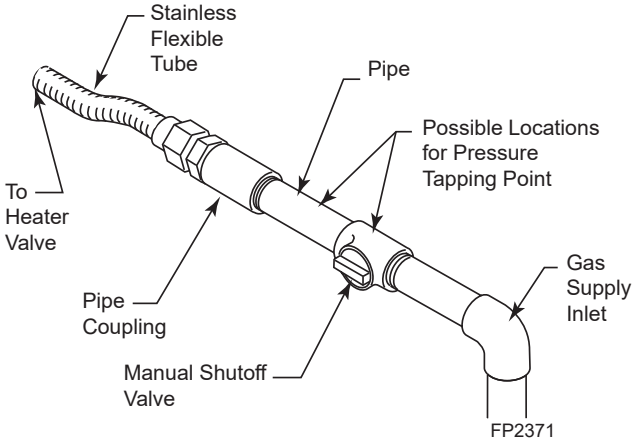

Figure 13 - Gas Connection

WARNING

CHECK GAS TYPE: The gas supply must be the same as stated on the heater's rating plate. If the gas supply is different, DO NOT INSTALL THE HEATER. Contact your dealer for the correct model.

WARNING

Connecting directly to an unregulated propane/LPG tank can cause an explosion.

The heater gas inlet connection is a 3/8" NPT at the valve. All units have the inlet connection on the right side, when you face the unit. To connect from the opposite side, route the pipe under the rear portion of the unit.

When tightening up the joint to the valve, hold the valve securely to prevent movement.

MANUAL CONTROL

Figure 14

The pressure regulator is preset and locked to discourage tampering. If the pressure is not as specified, replace the regulator with the correct part from the parts list in this manual.

Remove 1/8" NPT plug, located on side of regulator body. Install fitting and tubing to pressure gauge. After taking pressure reading, reinstall test plug. Check for gas leaks.

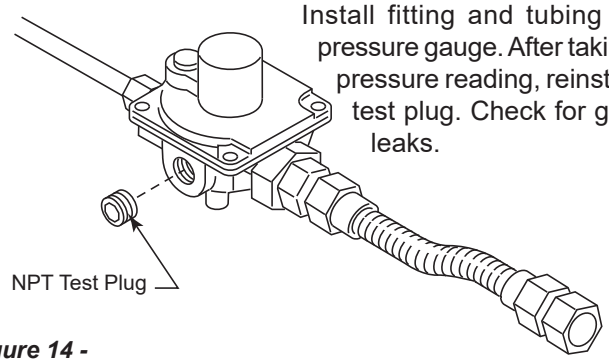

Figure 14 - Pressure Test Point Location for Manual Control

MILLIVOLT CONTROL

Figure 15

The valve regulator controls the burner pressure which should be checked at the pressure test point.

Turn captured screw counter clockwise two or three turns and then place tubing to pressure gauge over test point (Use test point "OUT" closest to control knob). After taking pressure reading, be sure and turn captured screw clockwise firmly to re-seal. Do not over torque. Check for gas leaks.

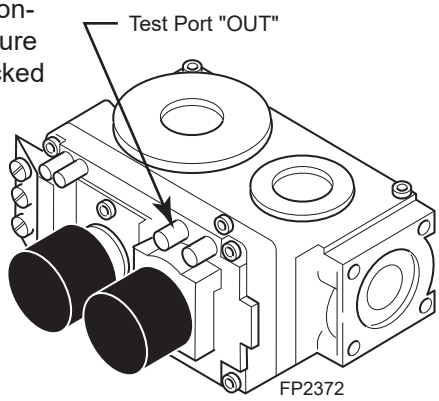

Figure 15 - Pressure Test Point Location Millivolt Control

WARNING

Label all wires prior to disconnection when servicing controls.

Wiring errors can cause improper and dangerous operation.

Verify proper operation after servicing.

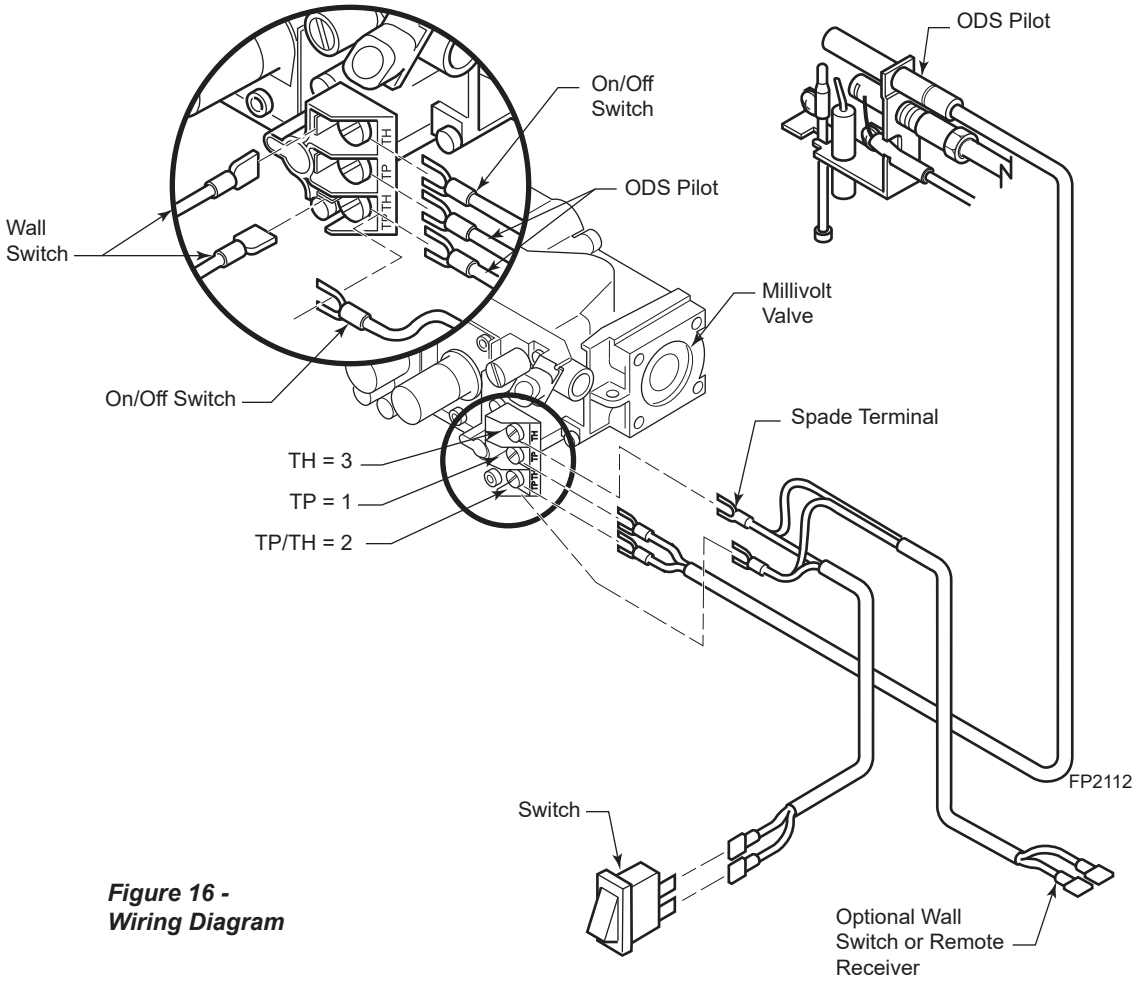

Figure 16 - Wiring Diagram

► CONNECTING OPTIONAL WALL SWITCH OR THERMOSTAT (VENT FREE APPLICATIONS ONLY)

1. Use 18 AWG, two-wire cable, 20 feet maximum length.
2. At one end of the cable, connect both wires to the wall switch or thermostat. At the other end, connect one wire to TP/TH and one wire to TH. The color of the wires does not matter. Or you can hook the wall switch or thermostat to wires on the unit.

CONNECTING OPTIONAL REMOTE RECEIVER

FOLLOW INSTRUCTIONS SUPPLIED WITH THE REMOTE

1. Connect the wires to the two .25" male connectors located on the left side of the valve when facing the unit. *Page 13, Figure 16.* Do not let wire touch grate or burner.
2. Stick velcro pads with self-adhesive backing to the right side of remote receiver and to the left side of the unit. *Figure 17*
3. Attach remote receiver with velcro pads. Control switch must face forward.

NOTE: Heat reduces battery life. You can protect the receiver and extend battery life by mounting the receiver in a wall or other location outside the fireplace.

CHECKING SYSTEM OPERATION

The millivolt system and individual components may be checked with a millivolt meter having a 1-1000 mV range. Conduct each check shown in chart by connecting meter test leads to terminals as indicated.

A. Complete Millivolt System Check

(“A” Reading - Thermostat contacts CLOSED - Control knob “ON” - Main burner should turn ON)

1. If reading is more than 175 millivolts and the automatic valve still does not come on, replace the control.
2. If the closed circuit reading (“A” reading) is less than 175 millivolts, determine cause for low reading, proceed to Section B.

B. Thermopile Output Reading Check

(“B” Reading - thermostat contacts OPEN - Main burner OFF

1. Check gas pressure to the unit. If gas pressure is within minimum and maximum on data plate, then check pilot voltage, 500 millivolts minimum. If the minimum millivolt reading is not obtainable, replace pilot.

Check Test	To Test	Connect Meter Leads To Terminals	Switch or Thermostat Contacts	Meter Reading Should Be
A	Complete System	2 & 3	Closed	Minimum 175
B	Thermopile Output	1 & 2	Open	Minimum 500

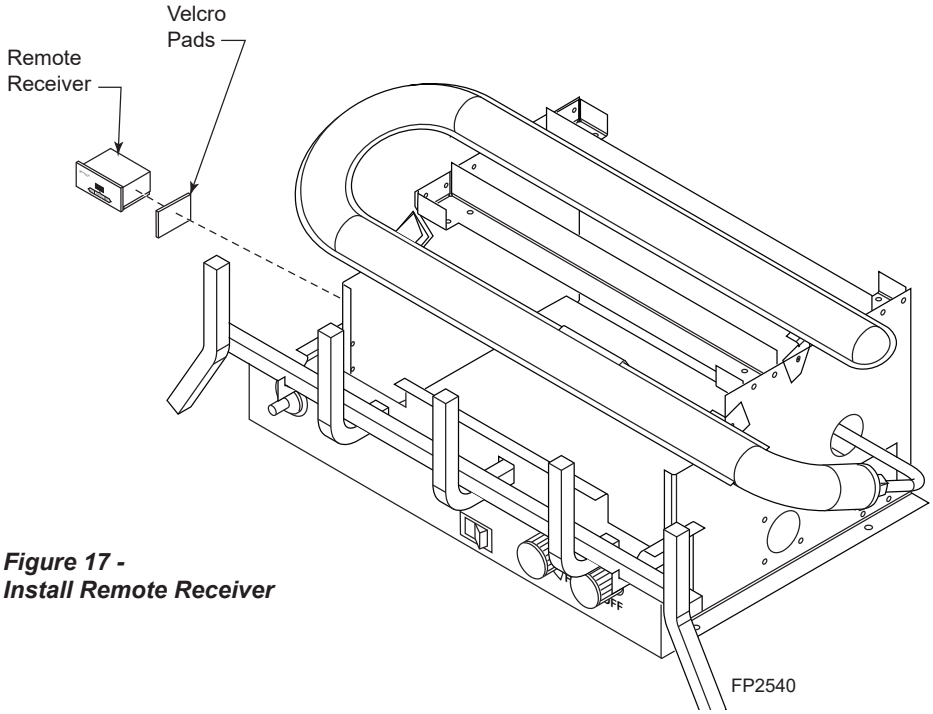

Figure 17 - Install Remote Receiver

WARNING

The positioning of the logs is critical to the safe and clean operation of this heater. Sooting and other problems may result if the logs are not properly and firmly positioned in the appliance. Never add additional logs or embellishments such as pine cones, vermiculite or rock wool to the heater. Only use the logs supplied with the unit.

Failure to position the parts in accordance with diagrams below or to use only parts specifically approved for this heater may result in property damage or personal injury.

Before you begin — Do not handle the log unit with your bare hands. **Always wear gloves to prevent skin irritation from ceramic fibers.** After handling the log unit, wash your hands gently with soap and water to remove any traces of fibers.

INSTALL EYF24-F LOG UNIT ON BURNER

Figure 18

1. Install Main Log (#1) on middle and rear supports of base. Tabs should fit inside log center opening. Check log position and stability.
2. Install Front Log (#2) in front of burner and behind grate.
3. Rest rear end Top Left Log (#3) in the indention on the main log. Line up hole in bottom of Top Left Log (#3) with slot on Front Log.
4. Position rear end of Top Right Log (#4) on indention of main log. Rest front end of Top Right Log (#4) on front lot.

PLACE THE DECORATIVE ROCK

WARNING

DO NOT sprinkle volcanic rock on the logs or around the pilot or the main burner. This may cause sooting. Only place volcanic rock on the floor of the fireplace.

During initial operation of the new heater, burning logs will give off a paper burning smell and orange flames will be present. Simply open the windows for a few hours to vent the odor.

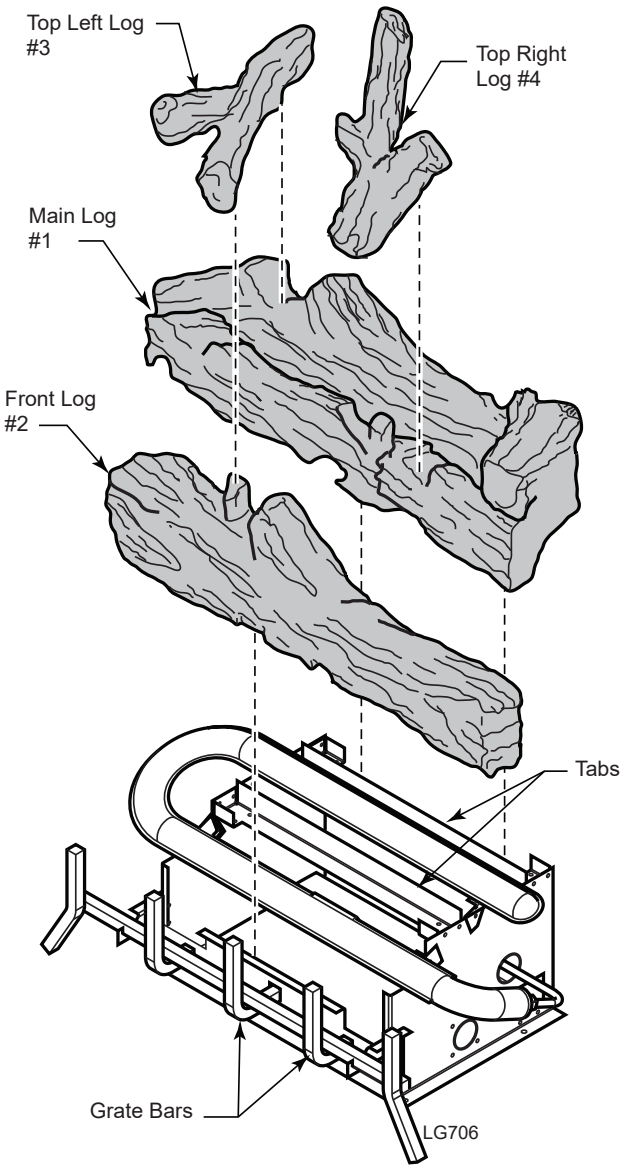

Figure 18 - EYF24-F Log Placement

PLACE EYF18-R LOGS

1. Place Rear Log (#1) on rear support. *Figure 19*
2. Place Middle Log (#2) on middle support. *Figure 20*
3. Place Front Log (#3) in between burner and grate. *Figure 21*
4. Rest Top Log (#4) in front and middle log cutouts. *Figure 22*

NOTE: Logs #1, #2 and #3 have ridges on the bottom which secure the logs to burner frame. After installing each log, check to be sure it is stable.

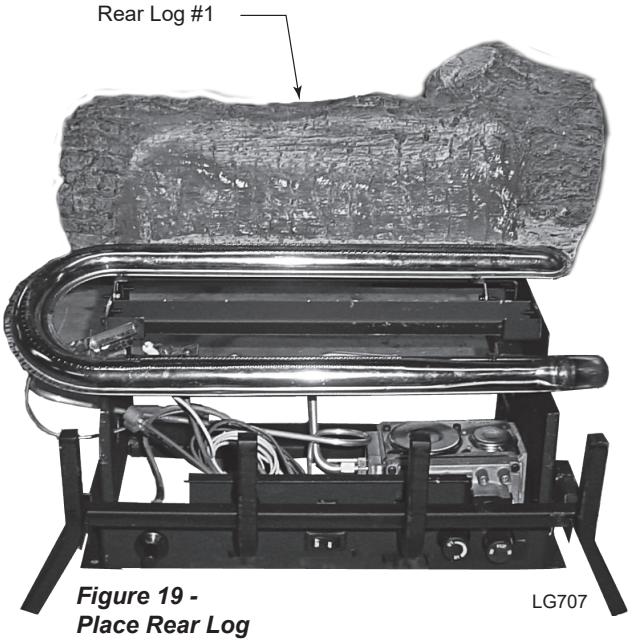

Figure 19 - Place Rear Log

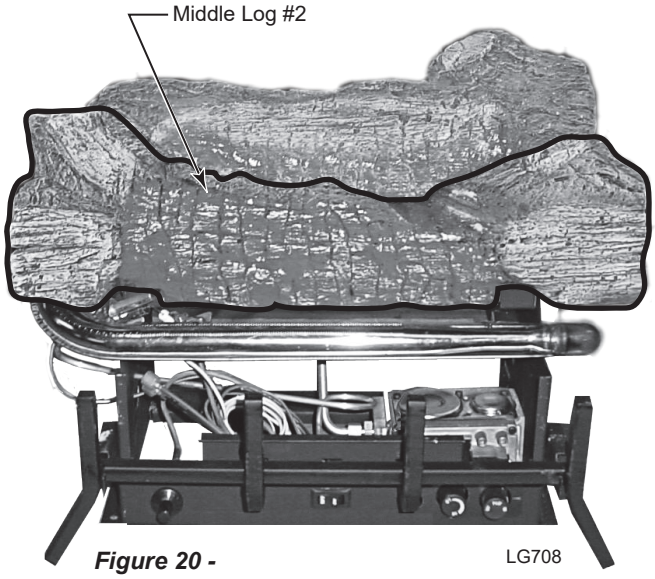

Figure 20 - Place Middle Log

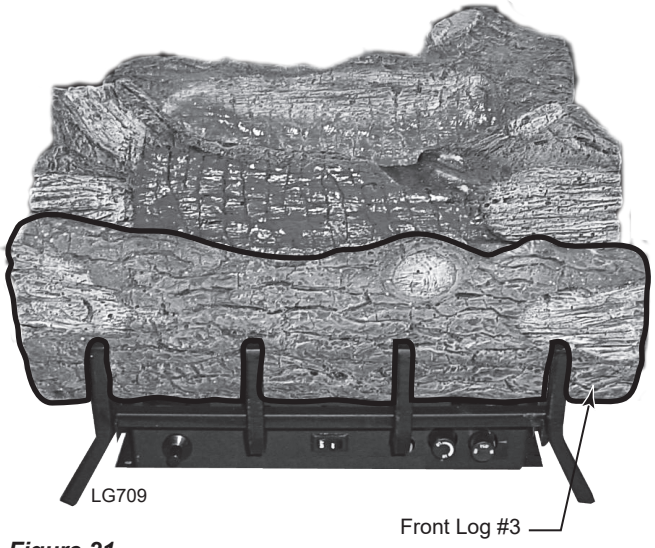

Figure 21 - Place Front Log

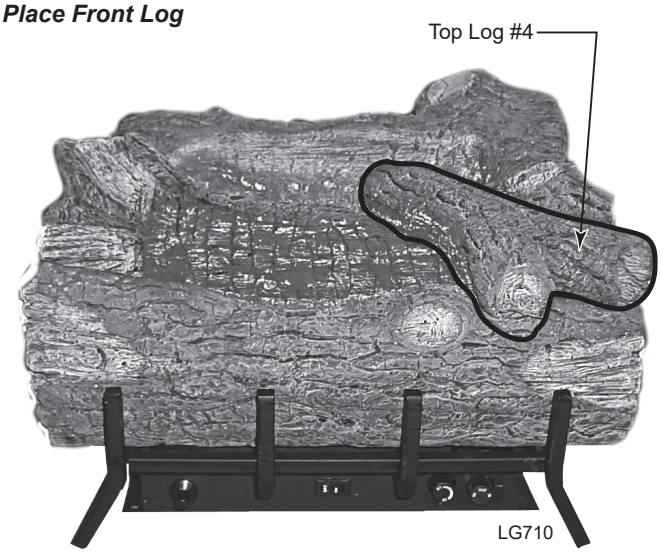

Figure 22 - Place Top Log

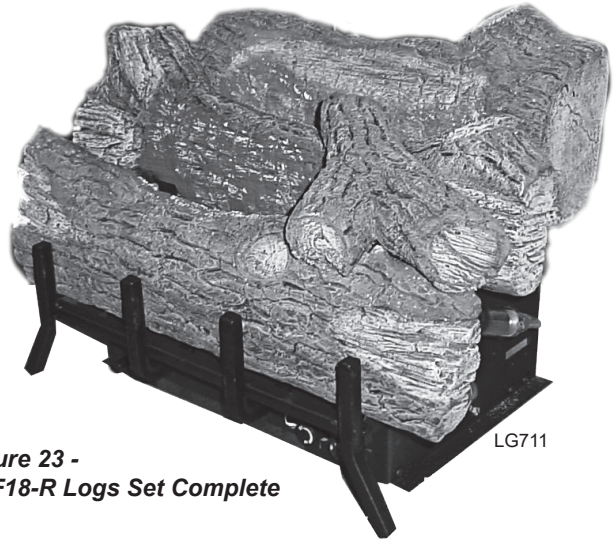

Figure 23 - EYF18-R Logs Set Complete

PLACE EYF24-R and EYF30-R LOG SETS

1. Place Rear Log (#1) on rear support. *Figure 24*
2. Place Middle Log (#2) on middle support. *Figure 25*
3. Place Front Log (#3) in between burner and grate. *Figure 26*
4. Place Top Right Log (#4) in bottom log cutouts. *Figure 27*
5. Rest Top Left Log (#5) in front and middle log cutouts. *Figure 28*

NOTE: Logs #1, #2 and #3 have ridges on the bottom which secure the logs to burner frame. After installing each log, check to be sure it is stable.

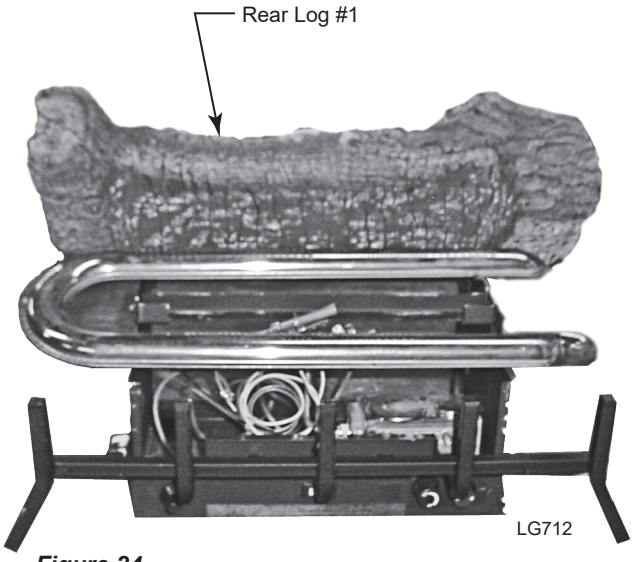

Figure 24 - Place Rear Log

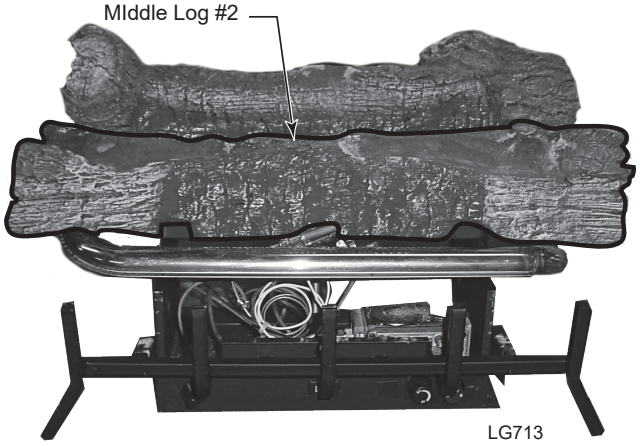

Figure 25 - Place Middle Log

NOTE: Installation instructions are the same for 24" and 30" log sets. Illustrations shown are for the 24" models. Some variations may exist between the images and the set included with this manual.

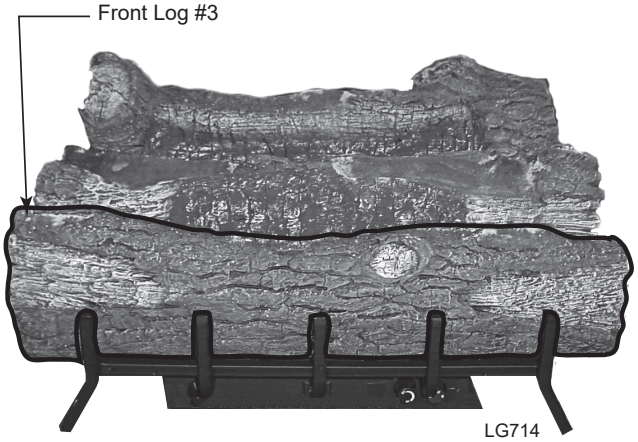

Figure 26 - Place Front Log

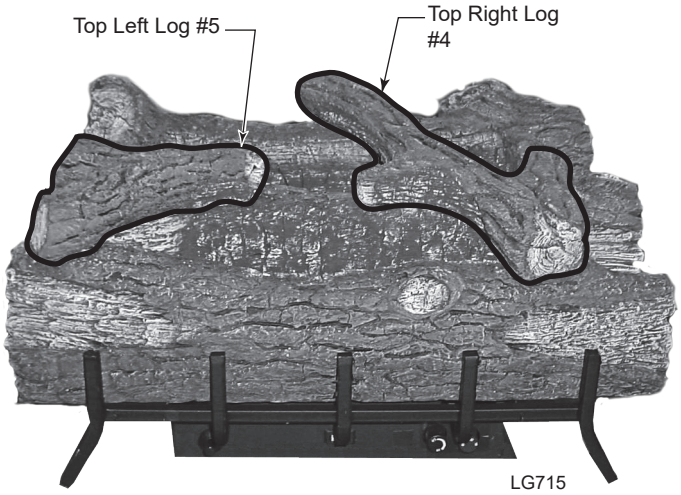

Figure 27 - Place Top Left and Right Logs

Figure 28 - EYF24-R Logs Complete

Flames from the pilot, front and rear burner should be visually checked as soon as the heater is installed. In addition, periodically check the flames visually during operation.

CHECK THE PILOT FLAME

The pilot flame must always be present when the heater is in operation. It should just touch the top of the thermocouple tip for natural. *Refer to Figures 29 & 30* for correct pilot flame.

If the pilot flame does not touch the thermocouple, then the main burner cannot function reliably. *Refer to Figures 29 & 30* for incorrect shape of pilot flame.

MILLIVOLT CONTROL

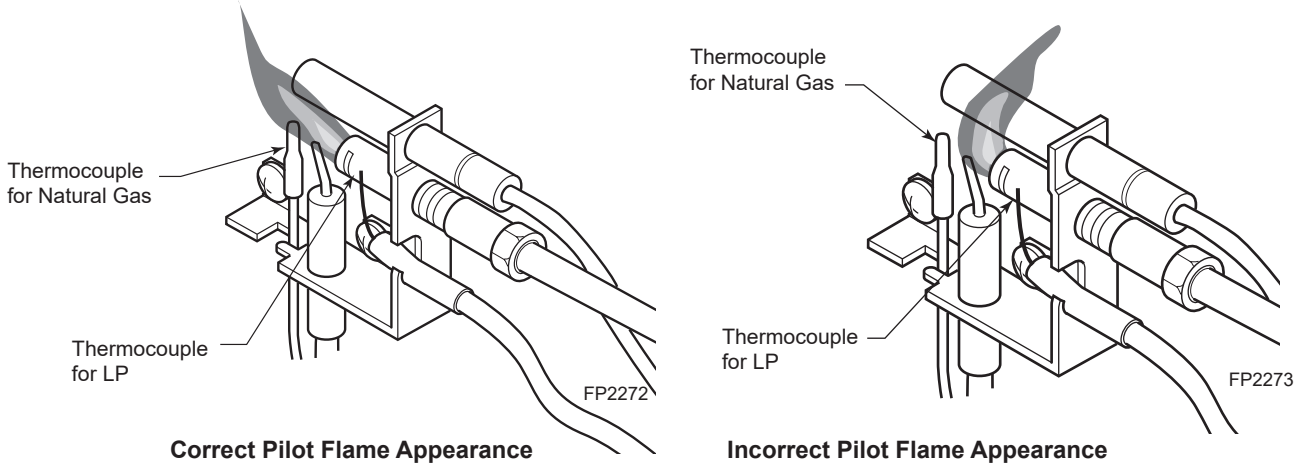

Figure 29 -
Millivolt Control Pilot Flame Appearance

MANUAL & HI/LO CONTROL

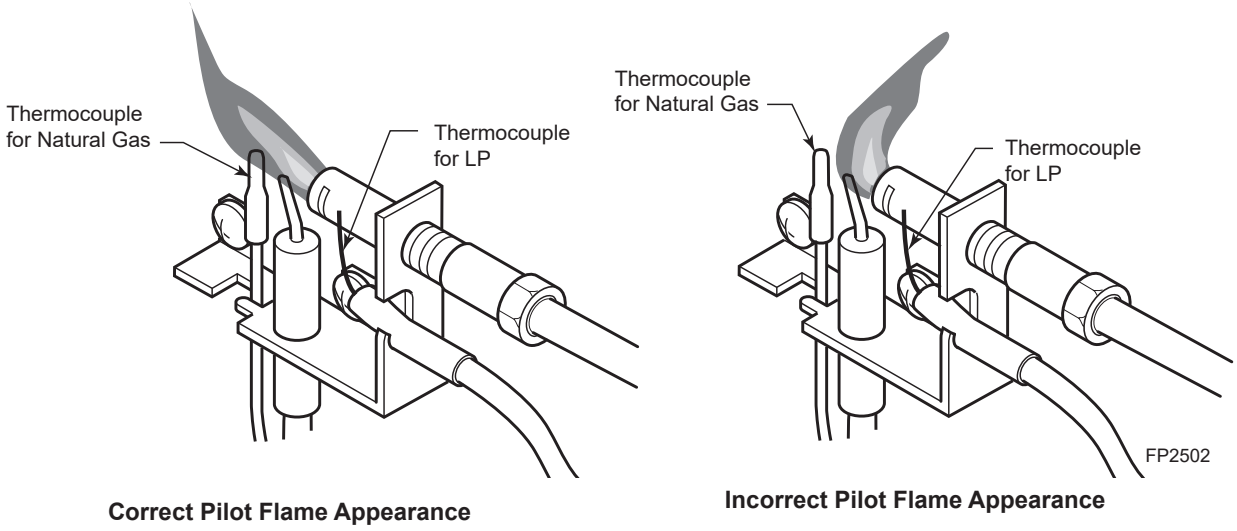

Figure 30 -
Manual & Hi/Lo Control Pilot Flame Appearance

FLAME APPEARANCE

In normal operation at full rate after 15 minutes, the following flame appearances should be observed:
The left and right flames should be yellow and extend 1" to 2" above the log top surfaces. The yellow flames should ***not*** contact the logs.

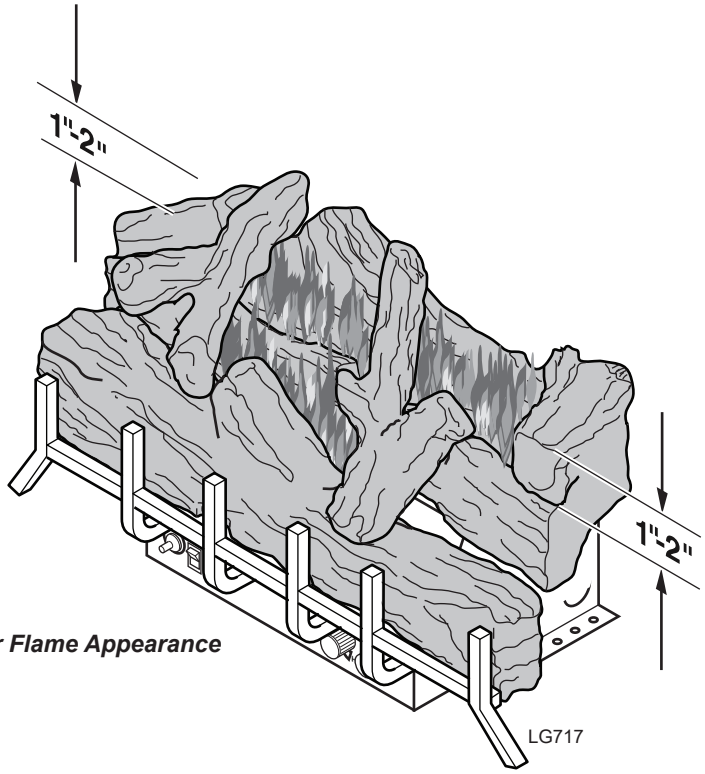

Figure 31 - Correct Burner Flame Appearance

OPERATING INSTRUCTIONS

Avoid any drafts that alter burner flame patterns. Do not allow fans to blow directly into the fireplace. Do not place a blower inside the burn area of the firebox. Ceiling fans may create drafts that alter flame patterns. Sooting and improper burning will result.

During manufacturing, fabricating and shipping, various components of this appliance are treated with certain oils, films or bonding agents. These chemicals are not harmful, but may produce annoying smoke and smells as they are burned off during the initial operation of the appliance, possibly causing headaches or eye or lung irritation. *This is a normal and temporary occurrence.*

The initial break-in operation should last two to three hours with the burner at the highest setting. Provide maximum ventilation by opening windows or doors to allow odors to dissipate. Any odors remaining after this initial break-in will be slight and will disappear with continued use.

This appliance must not be used with glass doors in the closed position. This can lead to pilot outages and severe sooting outside the fireplace.

FOR YOUR SAFETY, READ BEFORE LIGHTING

WARNING

If you do not follow these instruction exactly, a fire or explosion may result causing property damage, personal injury or loss of life.

A. This appliance is equipped with an ignition device which automatically lights the pilot. Do not try to light the pilot by hand.

B. BEFORE OPERATING smell all around the appliance area for gas. Be sure to smell next to the floor because some gas is heavier than air and will settle on the floor.

WHAT TO DO IF YOU SMELL GAS:

- Do not attempt to light any appliance.
- Do not touch any electric switch; do not use any phone in your building.
- Immediately call your gas supplier from a neighbor's phone. Follow the gas supplier's instructions.
- If you cannot reach your gas supplier, call the fire department.

C. Use only your hand to push in, or turn the gas control knob. Never use tools. If the knob will not push in or turn by hand, don't try to repair it. Call a qualified service technician. Force or attempted repair may result in a fire or explosion.

D. Do not use this appliance if any part of it has been under water. Immediately call a qualified service technician to inspect the appliance and to replace any part of the control system and any gas control that has been under water.

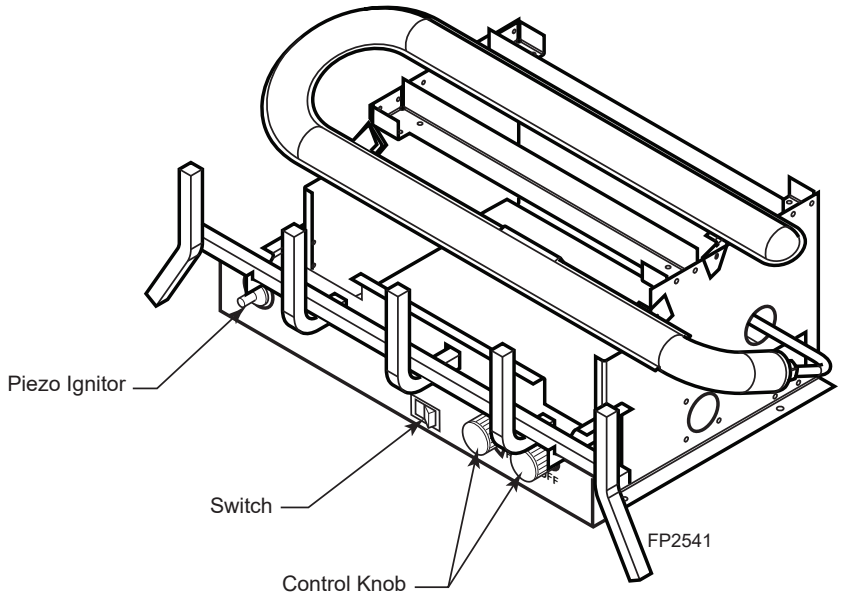

Figure 32 - Burner Controls

MANUAL CONTROL LIGHTING INSTRUCTIONS

1. **STOP!** Read the safety information.
2. Make sure the manual shutoff valve is fully open.
3. This heater is equipped with an ignition device (piezo) which automatically lights the pilot.
4. *Refer to Page 22, Figure 37* for the location of the piezo ignitor and control knob. Push in gas control knob slightly and turn control knob clockwise to the OFF position.
   NOTE: Knob cannot be turned to OFF unless knob is pushed in slightly. Do not force.
5. Wait 5 minutes to clear out any gas. Then smell for gas, including near the floor. If you smell gas **STOP!** Follow the instructions under "What to Do if You Smell Gas", *Page 19*. If you do not smell gas, go to the next step.
6. From OFF position, push in gas control knob slightly and turn counterclockwise to the IGN position. *Figure 33.* Push in and hold control knob for 5 seconds.
   NOTE: If you are running the heater for the first time, it will be necessary to press in the control knob for 30 seconds to allow air to bleed out of the gas piping.
7. With the control knob pushed in, push and release the piezo ignitor button to light the ODS pilot. The pilot is located on the left side of the heater, behind the middle log and in front of the back log. If piezo ignitor does not light the pilot, refer to "Match Lighting Instructions", *Page 23.*
8. Hold the control knob in for an additional 10 seconds to prevent the ODS pilot from shutting off the gas while the thermocouple is warming up.
9. Release the control knob.
   - If the knob does not pop out when released, stop and immediately call your service technician or gas supplier.
   - If the ODS pilot will not stay lit after several tries, push and turn the gas control knob clockwise to OFF and wait 15 seconds. Repeat steps 6 through 9.
10. Push in control knob and turn counterclockwise to the HIGH setting. At this location the control knob will pop out when positioned correctly. The knob can now be positioned at any position between HIGH and LOW. *Figures 34 and 35*

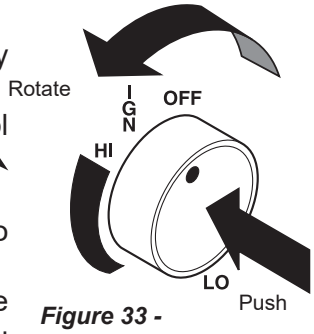

Figure 33 - IGN Position

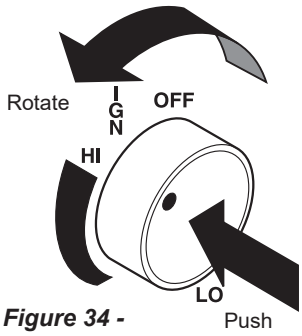

Figure 34 - HIGH Position

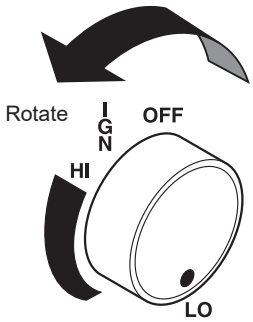

Figure 35 - LOW Position

WARNING

Wait 30 seconds before readjusting the heater when the control knob has been turned down to a lower setting.

TO TURN OFF GAS TO HEATER

1. Turn control knob clockwise to **OFF** position to completely shut off the heater.
2. If applicable: Turn off all electric power to the heater.

MILLIVOLT CONTROL LIGHTING INSTRUCTIONS

1. **STOP!** Read the safety information label.
2. Make sure the manual shutoff valve is fully open.
3. This gas log set is equipped with an ignition device (piezo) which automatically lights the pilot. If piezo ignitor does not light the pilot, refer to instructions for *Match Lighting Instructions, Page 23*.
4. Turn gas control knob clockwise to the OFF position, set thermostat to lowest setting and turn ON/OFF switch to OFF position.
5. Wait (5) minutes to clear out any gas. Then smell for gas, including near the floor. If you smell gas, **STOP!** Follow *What to Do if You Smell Gas, Page 20*. If you don't smell gas, go to next step.
6. From OFF position, turn the gas control knob counterclockwise to IGN position. Push in control knob for 5 seconds.
7. With the control knob pushed in, push in and release the piezo ignitor button to light the pilot.
8. Continue pushing the control knob in for a further 60 seconds to prevent the flame detector from shutting off the gas while the probe is warming up. Release the control knob.
9. Turn gas control knob counterclockwise to the ON position.
10. After the pilot has been lit for one minute, the burners can be turned on. Turn the ON/OFF switch to ON position or adjust thermostat to desired setting.
11. If the gas logs will not operate, follow the instructions *To Turn Off Gas To Heater* below and call your service technician or gas supplier.

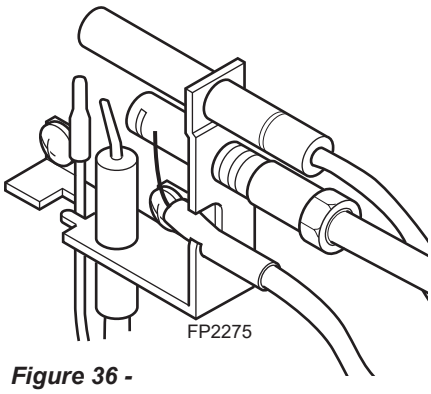

Figure 36 - Pilot

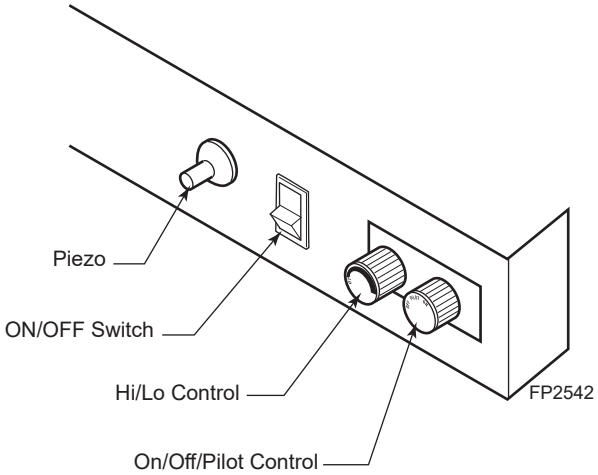

Figure 37 - Millivolt Controls

TO TURN OFF GAS TO HEATER

1. Turn control knob clockwise to OFF position to completely shut off the heater.
2. If applicable: Turn ON/OFF switch to OFF position and/or set thermostat (if present) to lowest setting.
3. If applicable: Turn off all electric power to the heater.

MATCH LIGHTING INSTRUCTIONS

1. Remove any items necessary for easy access to the pilot (for example: logs, screens, etc.).
2. Follow appropriate lighting instructions found previously. Instead of pushing and releasing the piezo button, light a match and hold the flame to the end of the pilot and ignite the pilot.
3. After control knob has been released and pilot stays lit, reinstall any items that were removed for pilot access.
4. Call a qualified service technician for repair or replacement of the piezo ignitor.

WARNING

Turn off heater and allow to cool before cleaning.

Disconnect electrical power (optional blower) before cleaning or servicing.

MAINTENANCE

Remove logs carefully by holding gently at each end. Gloves are recommended to prevent skin irritation from ceramic fibers. If skin becomes irritated, wash gently with soap and water. Refer to *Log Placement, Pages 16-18* for correct log placement.

PERIODIC CLEANING - Refer to the parts diagram for location of items discussed below.

- Do not use cleaning fluid to clean logs or any part of heater.
- Brush logs with soft bristle brush or vacuum with brush attachment.
- Vacuum loose particles and dust from the front and rear burner, control and piezo covers and grate weldment.
- Inspect and clean burner air intake holes. Remove lint or particles with vacuum, brush, or pipe cleaners. Failure to keep air intake holes clean will result in sooting and poor combustion.
- External case should be dusted and wiped with a wet soapy cloth.

ANNUAL CLEANING/INSPECTION - Refer to the parts diagram for location of items discussed below.

- Inspect and clean burner air intake holes. Remove lint or particles with vacuum, brush or pipe cleaners. Failure to keep air intake holes clean will result in sooting and poor combustion.
- Inspect and clean all burner ports.
- Inspect ODS pilot for operation and accumulation of lint at air intake holes.
- Verify flame pattern and log placement for proper operation.
- Verify smooth and responsive ignition of main burner and rear burner.

WARNING

Turn off appliance and allow to cool before cleaning.
Only a qualified service person should service and repair the heater.

NOTE: All troubleshooting items are listed in order of operation.

Problem	Possible Cause	Solution
When ignitor button is pressed, there is not spark at ODS/pilot.	1. Ignitor electrode positioned wrong.	1. Replace ignitor.
	2. Ignitor electrode is broken.	2. Replace ignitor.
	3. Ignitor electrode not connected to ignitor cable.	3. Reconnect ignitor cable.
	4. Ignitor cable pinched or wet. Keep ignitor cable dry.	4. Free ignitor cable if pinched by any metal or tubing.
	5. Broken ignitor cable.	5. Replace ignitor cable.
	6. Bad piezo ignitor.	6. Replace piezo ignitor.
Appliance produces un-wanted odors.	1. Appliance burning vapors from paint, hair spray, glues, etc.	1. Ventilate room. Stop using odor causing products while heater is running.
	2. Gas leak.	2. Locate and correct leaks.
	3. Initial burn off.	3. Ventilate room and turn unit on high until odor is gone. Odor should be gone after 6 hours of continuous use.
Appliance shuts off during use.	1. Not enough fresh air is available for ODS/pilot to operate.	1. open window and/or door for ventilation.
	2. Low line pressure.	2. Contact local gas company.
	3. ODS/pilot is partially clogged.	3. Clean ODS/pilot.
	4. Defective thermopile.	4. Check wire connections. Check output should be 500 mV across TH/TP and TP terminals with ON/OFF switches off.
	5. Restrictions in incoming air flow.	5. Check for bottom riser on glass door, sunken fireplace, excessive lava rock/ cinders densely packed against grate.
Gas odor even when control knob is in OFF position.	1. Gas leak.	1. Locate and correct all leaks.
	2. Control valve defective.	2. Replace control valve.
When ignitor button is pressed, there is spark at ODS/pilot, but no ignition.	1. Gas supply turned off or manual shutoff valve closed.	1. Turn on gas supply or open manual shutoff valve.
	2. Control knob not in PILOT position.	2. Turn control knob to PILOT position.
	3. Control knob not pressed in while in PILOT position.	3. Press in control knob while in PILOT position.
	4. Air in gas lines when installed.	4. Continue holding down control knob. Repeat igniting operation until air is removed.
	5. ODS/pilot is clogged.	5. Replace ODS/pilot assembly or get it services.
	6. Gas regulator setting is not correct.	6. Check incoming pressure. Replace gas regulator.

Problem	Possible Cause	Solution
ODS/pilot lights, but flame goes out when control knob is released.	1. Control knob not fully pressed in.	1. Press in control knob fully.
	2. Control knob not pressed in long enough.	2. After ODS/pilot lights, keep control knob pressed in for 30 seconds.
	3. Manual shutoff valve not fully open.	3. Fully open manual shutoff valve.
	4. Thermocouple connection loose at control valve.	4. Hand tighten thermocouple connection until snug, then tighten 1/4 turn more.
	5. Pilot flame not touching thermocouple, which allows thermocouple to cool, causing pilot flame to go out. This problem could be caused by either low gas pressure, or a dirty or partially clogged ODS/pilot.	5. Contact local gas company.
	6. Thermocouple damaged.	6. Replace thermocouple.
	7. Control valve damaged.	7. Replace control valve.
Burner does not light after ODS/pilot is lit.	1. Burner orifice is clogged.	1. Clean burner or replace burner orifice.
	2. Burner orifice diameter is too small.	2. Replace burner orifice.
	3. Inlet gas pressure is too low.	3. Contact qualified service person.
Burner backfires during combustion.	1. Manifold Pressure is too low.	1. Contact local gas company.
	2. Burner orifice is clogged.	2. Clean burner or replace burner orifice.
Slight smoke or odor during initial operation.	1. Burner orifice is clogged or damaged.	1. Clean burner or replace burner orifice.
	2. Burner is damaged.	2. Replace burner.
	3. Gas regulator is defective.	3. Replace gas regulator.
Logs appear to smoke after initial operation.	1. Vapors from paint or curing process of logs.	1. Problem will stop after a few hours of operation. Run the heater with the damper open if you have one, or open a window for the first few hours. 2. Log heater is intended to be smokeless. Turn OFF heater and call qualified service person.
Heater produces a whistling noise when burner is lit.	1. Turning control knob to HIGH position when burner is cold.	1. Turn control knob to LOW position and let warm up for a minute.
	2. Air in gas line.	2. Operate burner until air is removed from line. Have gas line checked by local gas company.
	3. Dirty or partially clogged burner orifices.	3. Clean burner or replace burner orifice.
No gas to pilot.	1. LP regulator shut down due to inlet pressure too high.	1. Verify LP tank regulator is installed and set at 11” to 13” w.c. 2. Replace regulator on heater.

WARNING **If the gas quality is bad, your pilot may not stay lit, the burners may produce soot and the heater may backfire when lit. If the gas quality or pressure is low, contact your local gas supplier immediately.**

MONESSEN

Service Parts

EYF18

18” Hearth Kit

Beginning Manufacturing Date: NA
Ending Manufacturing Date: Active

EYF18NM (Natural Gas Manual Control)
EYF18NV (Natural Gas Millivolt Control)

EYF18PM (Propane Manual Control)
EYF18PV (Propane Millivolt Control)

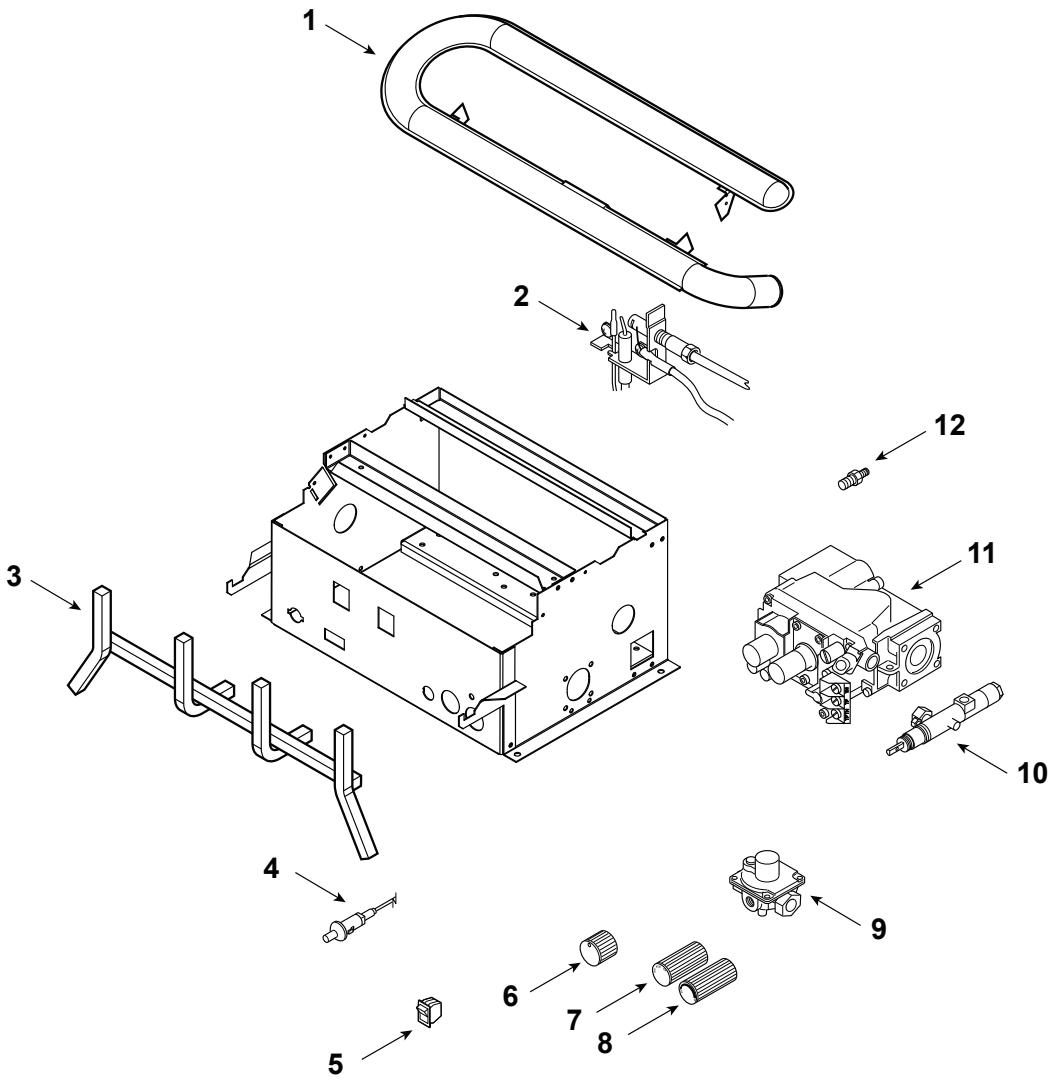

Part number list on following page.

12/19

MONESSEN

Service Parts

EYF18

Beginning Manufacturing Date: NA
Ending Manufacturing Date: Active

IMPORTANT: THIS IS DATED INFORMATION. Parts must be ordered from a dealer or distributor. **Hearth and Home Technologies does not sell directly to consumers**. Provide model number and serial number when requesting service parts from your dealer or distributor.

ITEM	DESCRIPTION	COMMENTS	PART NUMBER	Stocked at Depot
1	Burner	NG	SRV65D1053	
		Propane	SRV65D1054	
2	ODS Pilot Assembly (Manual Control)	NG	SRV26D2529	Y
		Propane	SRV14D0476	Y
	ODS Pilot Assembly (Millivolt Control)	NG	SRV14D0473	Y
		Propane	SRV14D0477	Y
	Pilot Tube		49D0050K	Y
3	Grate		65D1020K	
4	Piezo Ignitor		SRV14D0503	Y
	Piezo Wire		SRV00K0632	Y
5	On/Off Switch	Millivolt Control	SRV32D0232	Y
6	Knob Control	Manual Control	SRV18D0603	
7	Knob Extension, On/Off	Millivolt Control	SRV37D0010	
8	Knob Extension, Hi/Lo	Millivolt Control	SRV37D0011	
9	Regulator (Manual Control)	NG	SRV24D0305	Y
		Propane	SRV24D0306	Y
10	Control Valve (Manual Control)	NG	SRV30D0201	Y
		Propane	SRV30D0202	
11	Control Valve (Millivolt Control)	NG	SRV14D0467	Y
		Propane	SRV14D0468	Y
12	Injector	NG	SRV58D0051	
		Propane	SRV20H3144	
	Regulator to Valve Tube	Manual Control	SRV65D1004	Y
	Valve to Burner Tube	**No longer available**	65D1005K	
		Millivolt Control	65D1007K	
	Pilot Regulator	NG Only	SRV14D0469	Y

MONESSEN

Service Parts

EYF18

Beginning Manufacturing Date: NA
Ending Manufacturing Date: Active

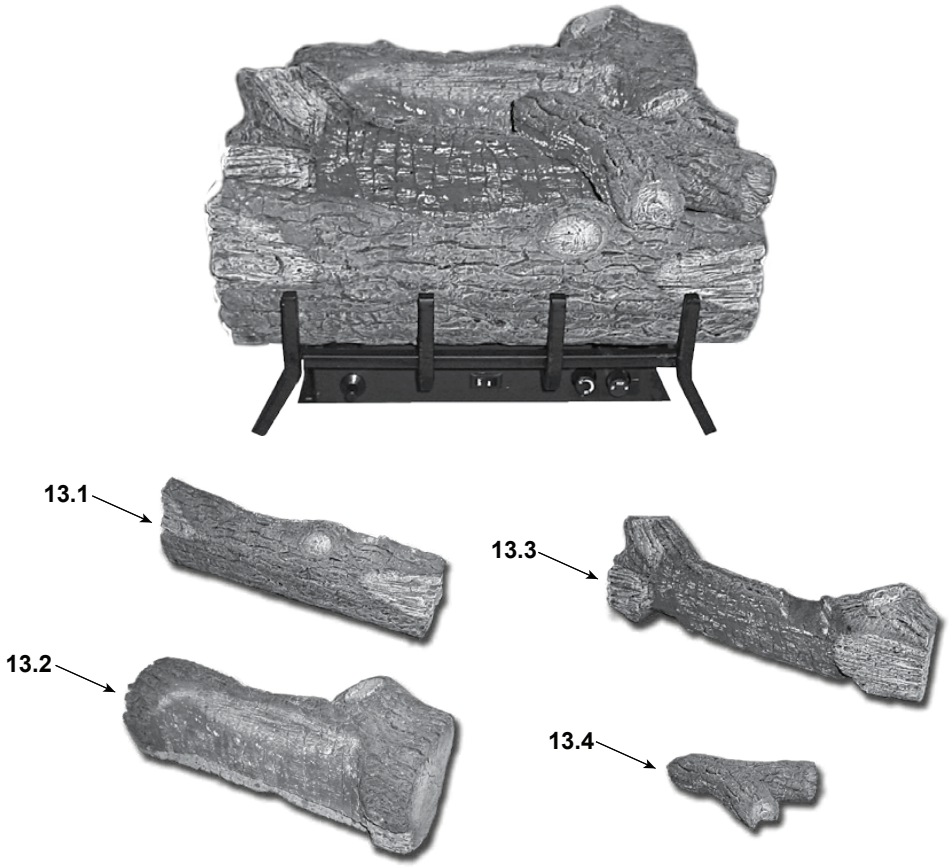

IMPORTANT: THIS IS DATED INFORMATION. Parts must be ordered from a dealer or distributor. **Hearth and Home Technologies does not sell directly to consumers**. Provide model number and serial number when requesting service parts from your dealer or distributor.

ITEM	DESCRIPTION	COMMENTS	PART NUMBER	Stocked at Depot
13	Log Assembly (Required to complete burner assembly, Sold seperately)	18” Mountain Oak	EYF18-R	
13.1	Front Log		65D1038K	
13.2	Rear Log		65D1036K	
13.3	Middle Log		65D1037K	
13.4	Top Log		65D1039K	

MONESSEN

Service Parts

EYF24

24" Hearth Kit

Beginning Manufacturing Date: NA
Ending Manufacturing Date: Active

EYF24NM (Natural Gas Manual Control)
EYF24NV (Natural Gas Millivolt Control)

EYF24PM (Propane Manual Control)
EYF24PV (Propane Millivolt Control)

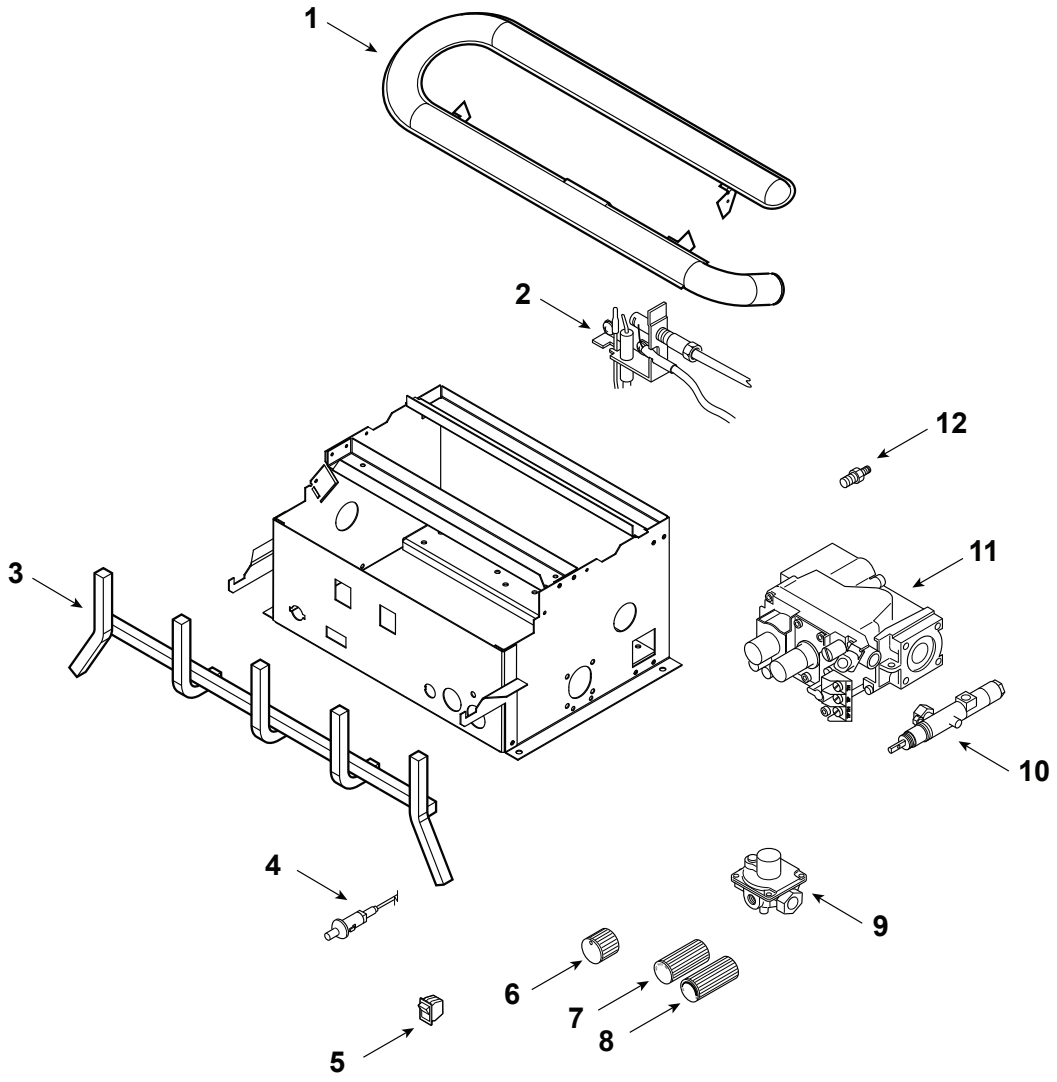

Part number list on following page.

12/19

MONESSEN **Service Parts**

EYF24

Beginning Manufacturing Date: NA
Ending Manufacturing Date: Active

IMPORTANT: THIS IS DATED INFORMATION. Parts must be ordered from a dealer or distributor. **Hearth and Home Technologies does not sell directly to consumers**. Provide model number and serial number when requesting service parts from your dealer or distributor.

ITEM	DESCRIPTION	COMMENTS	PART NUMBER	Stocked at Depot
1	Burner	NG	SRV65D1055	Y
		Propane	SRV65D1056	
2	ODS Pilot Assembly (Manual Control)	NG	SRV26D2529	Y
		Propane	SRV14D0476	Y
	ODS Pilot Assembly (Millivolt Control)	NG	SRV14D0473	Y
		Propane	SRV14D0477	Y
	Pilot Tube		49D0050K	Y
3	Grate		65D1025K	
4	Piezo Ignitor		SRV14D0503	Y
	Piezo Wire		SRV00K0632	Y
5	On/Off Switch	Millivolt Control	SRV32D0232	Y
6	Knob Control	Manual Control	SRV18D0603	
7	Knob Extension, On/Off	Millivolt Control	SRV37D0010	
8	Knob Extension, Hi/Lo	Millivolt Control	SRV37D0011	
9	Regulator (Manual Control)	NG	SRV24D0305	Y
		Propane	SRV24D0306	Y
10	Control Valve (Manual Control)	NG	SRV30D0201	Y
		Propane	SRV30D0202	
11	Control Valve (Millivolt Control)	NG	SRV14D0467	Y
		Propane	SRV14D0468	Y
12	Injector, Manual Control	NG	SRV70D0064	Y
		Propane	SRV57D0612	Y
	Injector, Millivolt Control	NG	SRV57D0209	Y
		Propane	SRV57D0612	Y
	Regulator to Valve Tube	Manual Control	SRV65D1004	Y
	Valve to Burner Tube	Manual Control	65D1006K	
		Millivolt Control	65D1008K	
	Pilot Regulator	NG Only	SRV14D0469	Y

MONESSEN **Service Parts**

EYF24

Beginning Manufacturing Date: NA
Ending Manufacturing Date: Active

IMPORTANT: THIS IS DATED INFORMATION. Parts must be ordered from a dealer or distributor. **Hearth and Home Technologies does not sell directly to consumers**. Provide model number and serial number when requesting service parts from your dealer or distributor.

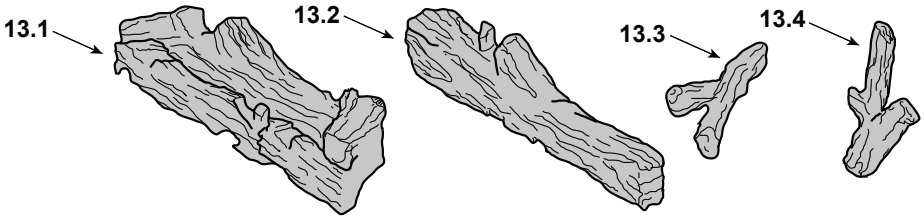

ITEM	DESCRIPTION	COMMENTS	PART NUMBER	Stocked at Depot
13	Log Assembly, 24” Mountain Oak Ceramic Fiber (Required to complete burner assembly, Sold seperately)	**No longer available**	EYF24-F	
13.1	Main Log		65D0006K	
13.2	Front Log		65D1030K	
13.3	Top Left Log		65D0008K	
13.4	Top Right Log		65D0009K	

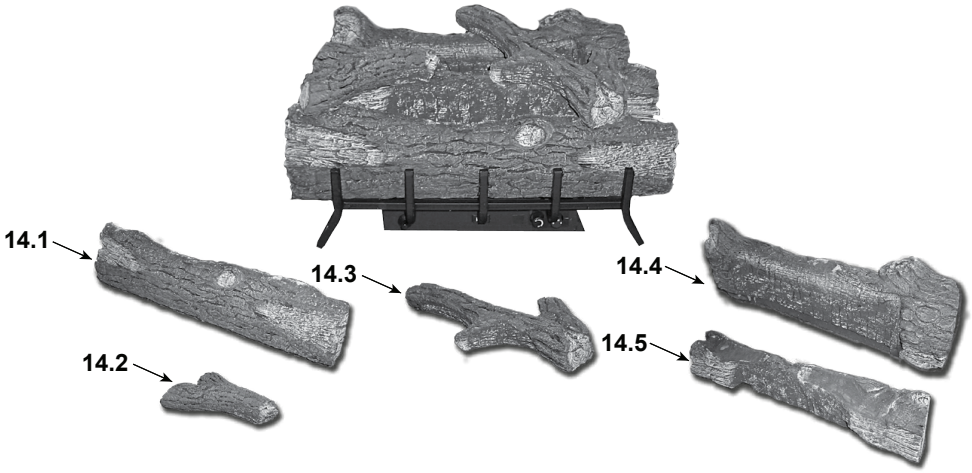

14	Log Assembly (Required to complete burner assembly, Sold seperately)	24” Mountian Oak Cement Log	EYF24-R	
		30” Mountain Oak	EYF30-R	
14.1	Front Log	24”	65D1033K	
		30”	65D1501K	
14.2	Top Left Log	24”	65D1035K	
		30”	65D1035K	
14.3	Top Right Log	24”	65D1034K	
		30”	65D1034K	
14.4	Rear Log	24”	65D1031K	
		30”	65D1031K	
14.5	Middle Log	24”	65D1032K	
		30”	65D1500K	

Massachusetts Residents Only — Please read and follow these special requirements

NOTE REGARDING VENTED PRODUCTS

This product must be installed by a licensed plumber or gas fitter when installed within the Commonwealth of Massachusetts.

Any residence with a direct vent product must have a CO detector installed in the residence.

Installation of the fireplace or vented gas log in the State of Massachusetts requires the damper to be permanently removed or welded in the fully open position.

In addition, a naturally vented gas log may not be installed in a bedroom or bathroom in the State of Massachusetts.

Flex line installation must not exceed 36 inches and must have a T shutoff valve.

NOTE REGARDING VENT FREE PRODUCTS

This product must be installed by a licensed plumber or gas fitter when installed within the Commonwealth of Massachusetts.

In addition, vent free products may not be installed in a bedroom or bathroom regardless of size or type in the State of Massachusetts.

Flex line installation must not exceed 36 inches and must have a T shutoff valve.

CARBON MONOXIDE DETECTOR REQUIREMENTS

(2) Revise 10.8.3 by adding the following additional requirements:

(a) For all side wall horizontally vented gas fueled equipment installed in every dwelling, building or structure used in whole or in part for residential purposes, including those owned or operated by the Commonwealth and where the side wall exhaust vent termination is less than seven (7) feet above finished grade in the area of the venting, including but not limited to decks and porches, the following requirements shall be satisfied:

1. **Installation of carbon monoxide detectors.** At the time of installation of the side wall horizontal vented gas fueled equipment, the installing plumber or gas fitter shall observe that a hard wired carbon monoxide detector with an alarm and battery back-up is installed on the floor level where the gas equipment is to be installed. In addition, the installing plumber or gas fitter shall observe that a battery operated or hard wired carbon monoxide detector with an alarm is installed on each additional level of the dwelling, building or structure served by the side wall horizontal vented gas fueled equipment. It shall be the responsibility of the property owner to secure the services of qualified licensed professionals for the installation of hard wired carbon monoxide detectors

a. In the event that the side wall horizontally vented gas fueled equipment is installed in a crawl space or an attic, the hard wired carbon monoxide detector with alarm and battery back-up may be installed on the next adjacent floor level.

b. In the event that the requirements of this subdivision can not be met at the time of completion of installation, the owner shall have a period of thirty (30) days to comply with the above requirements; provided, however, that during said thirty (30) day period, a battery operated carbon monoxide detector with an alarm shall be installed.

2. **Approved Carbon Monoxide Detectors.** Each carbon monoxide detector as required in accordance with the above provisions shall comply with NFPA 720 and be ANSI/UL 2034 listed and IAS certified.

3. **Signage.** A metal or plastic identification plate shall be permanently mounted to the exterior of the building at a minimum height of eight (8) feet above grade directly in line with the exhaust vent terminal for the horizontally vented gas fueled heating appliance or equipment. The sign shall read, in print size no less than one-half (1/2) inch in size, “GAS VENT DIRECTLY BELOW. KEEP CLEAR OF ALL OBSTRUCTIONS.”

4. **Inspection.** The state or local gas inspector of the side wall horizontally vented gas fueled equipment shall not approve the installation unless, upon inspection, the inspector observes carbon monoxide detectors and signage installed in accordance with the provisions of 248 CMR 5.08(2)(a)1 through 4.

(b) **Exemptions:** The following equipment is exempt from 248 CMR 5.08(2)(a)1 through 4:

1. The equipment listed in Chapter 10 entitled "Equipment Not Required To Be Vented" in the most current edition of NFPA 54 as adopted by the Board; and

2. Product Approved side wall horizontally vented gas fueled equipment installed in a room or structure separate from the dwelling, building or structure used in whole or in part for residential purposes.

(c) **Manufacturer requirements — Gas Equipment Venting System Provided.** When the manufacturer of Product Approved side wall horizontally vented gas equipment provides a venting system design or venting system components with the equipment, the instructions provided by the manufacturer for installation of the equipment and the venting system shall include:

1. Detailed instructions for the installation of the venting system design or the venting system components; and

2. A complete parts list for the venting system design or venting system.

(d) **Manufacturer requirements — Gas Equipment Venting System Not Provided.** When the manufacturer of a Product Approved side wall horizontally vented gas fueled equipment does not provide the parts for venting the flue gases, but identifies “special venting systems,” the following requirements shall be satisfied by the manufacturer:

1. The referenced "special venting system" instructions shall be included with the appliance or equipment installation instructions; and

2. The “special venting systems” shall be Product Approved by the Board, and the instructions for that system shall include a parts list and detailed installation instructions.

(e) A copy of all installation instructions for all Product Approved side wall horizontally vented gas fueled equipment, all venting instructions, all parts lists for venting instructions, and/or all venting design

Hearth & Home Technologies
LIMITED LIFETIME WARRANTY

Hearth & Home Technologies, on behalf of its hearth brands ("HHT"), extends the following warranty for HHT gas, wood, pellet and electric hearth appliances that are purchased from an HHT authorized dealer.

WARRANTY COVERAGE:

HHT warrants to the original owner of the HHT appliance at the site of installation, and to any transferee taking ownership of the appliance at the site of installation within two years following the date of original purchase, that the HHT appliance will be free from defects in materials and workmanship at the time of manufacture. After installation, if covered components manufactured by HHT are found to be defective in materials or workmanship during the applicable warranty period, HHT will, at its option, repair or replace the covered components. HHT, at its own discretion, may fully discharge all of its obligations under such warranties by replacing the product itself or refunding the verified purchase price of the product itself. The maximum amount recoverable under this warranty is limited to the purchase price of the product. This warranty is subject to conditions, exclusions and limitations as described below.

WARRANTY PERIOD:

Warranty coverage for consumers begins at the date of installation. In the case of new home construction, warranty coverage begins on the date of first occupancy of the dwelling or six months after the sale of the product by an independent, authorized HHT dealer/distributor, whichever occurs earlier. However, the warranty shall commence no later than 24 months following the date of product shipment from HHT, regardless of the installation or occupancy date. The warranty period for parts and labor for covered components is produced in the following table.

The term "Limited Lifetime" in the table below is defined as: 20 years from the beginning date of warranty coverage for gas appliances, and 10 years from the beginning date of warranty coverage for wood and pellet appliances. These time periods reflect the minimum expected useful lives of the designated components under normal operating conditions.

Warranty Period		HHT Manufactured Appliances and Venting					
Parts	Labor	Gas	Pellet	Wood	Electric	Venting	Components Covered
1 Year		X	X	X	X	x	All parts including handles, external enamaled components and other material except as covered by Conditions, Exclusions, and Limitations listed
2 years			X	X			Igniters, Auger Motors, Electronic Components, and Glass
		X					Electrical components limited to modules, remotes/wall switches, valves, pilots, blowers, junction boxes, wire harnesses, transformers and lights (excluding light bulbs)
		X		X			Molded Refractory Panels, Glass Liners
3 years			X				Firepots, burnpots, mechanical feeders/auger assemblies
5 years	1 year	X					Vent Free Burners, Vent Free Logs
			X	X			Castings, Medallions and Baffles
6 years	3 years			X			Catalyst - Limitations Listed
7 years	3 years		X	X			Manifold tubes, HHT Chimney and Terminations
10 years	1 year	X					Burners, logs and refractory
Limited Lifetime	3 years	X	X	X			Firebox and heat exchanger, FlexBurn® System (engine, inner cover,access cover and fireback)
1 Year	None	X	X	X	X	X	All replacement parts beyond warranty period

See conditions, exclusions and limitations on the next page

WARRANTY CONDITIONS:

- This warranty only covers HHT appliances that are purchased through an HHT authorized dealer or distributor. A list of HHT authorized dealers is available on the HHT branded websites.
- This warranty is only valid while the HHT appliance remains at the site of original installation.
- This warranty is only valid in the country in which the HHT authorized dealer or distributor that sold the appliance resides.
- Contact your installing dealer for warranty service. If the installing dealer or distributor is unable to provide necessary parts, contact the nearest HHT authorized dealer or supplier. Additional service fees may apply if you are seeking warranty service from a dealer other than the dealer from whom you originally purchased the product.
- Check with your dealer in advance for any costs to you when arranging a warranty call. Travel and shipping charges for parts are not covered by this warranty.
- Limited Catalyst Warranty
  - For wood burning products containing a catalyst, the catalyst will be warranted for a six-year period to the original purchaser at the site of original installation. The purchaser must provide the name, address, and telephone number of the location where the product is installed, proof of original purchase date, date of failure, and any relevant information regarding the failure of the catalyst.

WARRANTY EXCLUSIONS:

This warranty does not cover the following:

- Changes in surface finishes as a result of normal use. As a heating appliance, some changes in color of interior and exterior surface finishes may occur. This is not a flaw and is not covered under warranty.
- Damage to printed, plated, or enameled surfaces caused by fingerprints, accidents, misuse, scratches, melted items, or other external sources and residues left on the plated surfaces from the use of abrasive cleaners or polishes.
- Repair or replacement of parts that are subject to normal wear and tear during the warranty period are not covered. These parts include: paint, wood and pellet gaskets, firebricks, grates, flame guides, batteries and the discoloration of glass.
- Expansion, contraction, or movement of certain parts causing noise. These conditions are normal and complaints related to this noise are not covered by this warranty.
- Damages resulting from: (1) failure to install, operate, or maintain the appliance in accordance with the installation instructions, operating instructions, and listing agent identification label furnished with the appliance; (2) failure to install the appliance in accordance with local building codes; (3) shipping or improper handling; (4) improper operation, abuse, misuse, continued operation with damaged, corroded or failed components, accident, or improperly/incorrectly performed repairs (5) environmental conditions, inadequate ventilation, negative pressure, or drafting caused by tightly sealed constructions, insufficient make-up air supply, or handling devices such as exhaust fans or forced air furnaces or other such causes; (6) use of fuels other than those specified in the operation instructions; (7) installation or use of components not supplied with the appliance or any other components not expressly authorized and approved by HHT; (8) modification of the appliance not expressly authorized and approved by HHT in writing; and/or (9) interruptions or fluctuations of electrical power supply to the appliance.
- Non-HHT venting components, hearth connections or other accessories used in conjunction with the appliance.
- Any part of a pre-existing fireplace system in which an insert or a decorative gas appliance is installed.
- HHT's obligation under this warranty does not extend to the appliance's capability to heat the desired space. Information is provided to assist the consumer and the dealer in selecting the proper appliance for the application. Consideration must be given to the appliance location and configuration, environmental conditions, insulation and air tightness of the structure.

This warranty is void if:

- The appliance has been over-fired, operated in atmospheres contaminated by chlorine, fluorine, or other damaging chemicals. Over-firing can be identified by, but not limited to, warped plates or tubes, deformation/warping of interior cast iron structure or components, rust colored cast iron, bubbling, cracking and discoloration of steel or enamel finishes.
- The appliance is subjected to prolonged periods of dampness or condensation.
- There is any damage to the appliance or other components due to water or weather damage which is the result of, but not limited to, improper chimney or venting installation.

LIMITATIONS OF LIABILITY

- The owner's exclusive remedy and HHT's sole obligation under this warranty, under any other warranty, express or implied, or in contract, tort or otherwise, shall be limited to replacement, repair, or refund, as specified above. In no event will HHT be liable for any incidental or consequential damages caused by defects in the appliance. Some states do not allow exclusions or limitation of incidental or consequential damages, so these limitations may not apply to you. This warranty gives you specific rights; you may also have other rights, which vary from state to state. EXCEPT TO THE EXTENT PROVIDED BY LAW, HHT MAKES NO EXPRESS WARRANTIES OTHER THAN THE WARRANTY SPECIFICED HEREIN. THE DURATION OF ANY IMPLIED WARRANTY IS LIMITED TO DURATION OF THE EXPRESSED WARRANTY SPECIFIED ABOVE.

LOVE AT FIRST LIGHT

Monessen, a brand of Hearth & Home Technologies
7571 215th Street West, Lakeville, MN 50044
www.monessenhearth.com