EdenPURE®

TurboAIR

User's Manual

Model No.: BW205

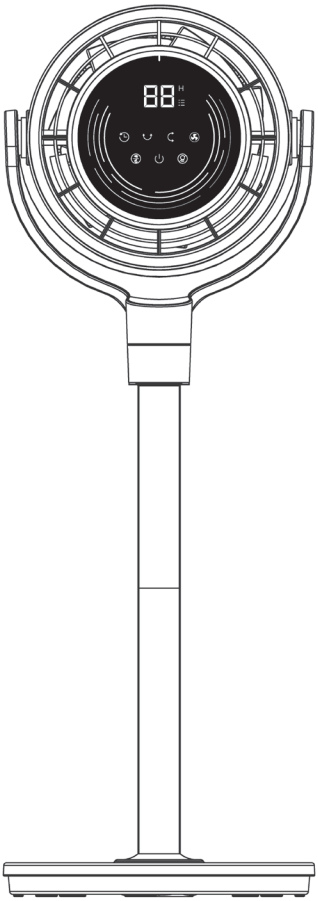

Table of Contents

Important Instructions ..... Page 1
General Safety Warnings ..... Page 2
General Operation Safety Warnings ..... Page 2
Warnings for the Cord ..... Page 3
Important Operational Warnings ..... Page 3
Electrical Safety Warnings ..... Page 4
Servicing Warning ..... Page 4
General Reminder ..... Page 4
Specifications ..... Page 5
Package Contents ..... Page 5
Fan Assemby ..... Page 6-8
Controls and Display ..... Page 9
Quick Guide of General Operations ..... Page 10-11
Remote Control ..... Page 12
More Ways to Use the Fan ..... Page 13
Cleaning and Maintanance ..... Page 14-16
Troubleshooting ..... Page 17

IMPORTANT INSTRUCTIONS

SAVE THESE INSTRUCTIONS
This User's Manual and any additional inserts contain important information about safety, use and disposal. Before using this product, please familiarize yourself with all operating and safety instructions. Please keep all documents for future reference.

INTENDED USE: This product is intended to circulate the air in indoor living spaces only in the United States. This product (Model BW205 Only) is intended for floor use only. This product is not intended for commercial or industrial use. The manufacturer assumes no responsibility for damage or injury due to unauthorized use or product modification. Failure to follow these directions will void the product warranty.

Read all
CAUTIONARY MARKINGS
on the appliance and
SAFETY INSTRUCTIONS
in the
USER'S MANUAL.

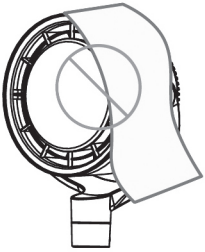

Do not cover
the air inlet and oulet
while the fan
is turned on.

Do not use the fan
near flammable
and combustibles.

GENERAL SAFETY WARNINGS

1. Use the appliance only as described in the this manual. Any other use may cause fire, electrical shock, or personal injury.
2. Risk to Children and Impaired Persons: Supervision is required during the installation, operation, cleaning and maintenance of this product by children 12 years of age and younger and anyone with reduced physical, sensory or mental capabilities. Children should be supervised to ensure that they do not play with the appliance, its parts and packaging materials.

GENERAL OPERATION SAFETY WARNINGS

1. Place the appliance on a flat, dry surface before use.
2. No part of this product (the appliance, power cord, plug, packaging, etc.) should be placed near furnaces, fireplaces, stoves or other high temperature heat sources.
   - Do not use the fan in high-temperature, dusty environments or places where acid or alkali is stored.
   - Do not use it on an uneven or unstable surface.
3. Do not immerse or use it near water and any other liquids. The appliance, power supply, power cord and plug cannot come into contact with water.
   - Do not use this product on wet surfaces.
   - Do not use this product in a bathtub or shower or set the product where it may fall into a bathtub, laundry, swimming pool or other water source.
   - Do not use this product outdoors or expose it to the weather.
4. Do not use the appliance until the base is installed.
5. When the product is plugged in, do not insert your fingers or any other foreign objects into the input or output opening grills, as this may cause a risk of electric shock or fire or damage the product.
6. Do not operate the unit close to curtains or any other fabrics. Do not hang foreign objects on the grill or they may get pulled into the fan.
7. Do not dismantle, repair, or try to modify the fan. Servicing should be performed by customer service.
8. Do not sit or stand on the product.
9. Fans should never blow directly on infants, the elderly, and patients for long periods of time.

WARNINGS FOR THE CORD

1. Do not run the cord under carpeting.
2. Do not cover the cord with throw rugs, runners, or similar coverings.
3. Do not run the cord under furniture or appliances.
4. The cord should not hang over edges of counters or be placed where it can be crimped or closed in doors. Arrange the cord away from traffic areas where it will not be tripped over.
5. Place the fan near an easily accessible outlet so it can be unplugged quickly during an emergency.
6. When plugged in, never use the power cord as a handle or otherwise yank, strain or stretch it.

IMPORTANT OPERATIONAL WARNINGS

1. Risk of fire. Your appliance is equipped with a detachable power supply. Use only the power cord and plug provided.
2. Before plugging power cord into electrical outlet, be sure that all electrical information on the rating label, including voltage, is compatible with your outlet's power supply.
3. This appliance has a polarized plug (one blade is wider than the other.) To reduce the risk of electrical shock, this plug is intended to fit in a polarized outlet only one way. If the plug does not fit fully in the outlet, reverse the plug. If it still does not fit, contact a qualified electrician. Do not attempt to alter the plug to fit.
4. A loose fit between wall outlet (receptacle) and plug may cause overheating and distortion of the plug. Discontinue the use of the product in this outlet. Contact a qualified electrician to replace loose or worn outlets.
5. Do not use if the unit has been dropped or damaged or if it has a damaged power cord or plug. To avoid the risk of electrical shock, do not attempt to repair or replace parts. Only original replacement parts may be used. If the power cord is damaged, contact customer service.
6. Before moving, repositioning, servicing, cleaning and when not in use, use the product control panel to turn the power to the unit off and then unplug it. To disconnect the plug from the outlet, grasp and pull only the plug. Also, turn the power off and unplug the unit if it will be left unattended for an extended period of time or during electrical storms.

ELECTRICITY SAFETY WARNING:

1. Make sure that the voltage of your electricity supply is the same as that indicated on the appliance.
2. Always unplug the unit before cleaning or leaving it sit for a long period of time. Keep your hands dry when plugging/unplugging the unit into the wall outlet.
3. Do not operate any air circulating fan with a damaged cord or plug. Discard the fan or call customer service.
4. WARNING: To reduce the risk of circuit overload fire or electric shock, do not use the air circulating fan with any solid-state speed control device.
5. Use a 12V/2A power adapter only. Turn off the appliance before plugging it in.
6. WARNING: To reduce the risk of fire, electric shock or injury to persons, do not use replacement parts that have not been recommended by the manufacturer.
7. If the power cord is damaged, it must be replaced by the manufacturer or its service agent or a similarly qualified person in order to avoid a hazard.

SERVICING WARNING

1. Clean your product regularly and as instructed in this manual. Prior to cleaning, turn off the power on your product and unplug it. Do not use gasoline, thinners, solvents, ammonias or other chemicals for cleaning. See the CLEANING instructions provided.
2. Do not open appliance housing while product is plugged in.

GENTLE REMINDER:

Check the appliance regularly and refer to TROUBLESHOOTING or contact customer service if it shows any of the following signs:

- Power cord or plug is damaged.
- Loud noise, unusual smell or excessive heat.

FOR HOUSEHOLD USE ONLY
READ AND SAVE THESE INSTRUCTIONS

SPECIFICATIONS

Model	BW205
Power Supply	12 -- 2A
Rated Power	24W
Power Adapter	Input: 120V - 60Hz 1.0A Output:
Battery Type	12V 2A

PACKAGE CONTENTS

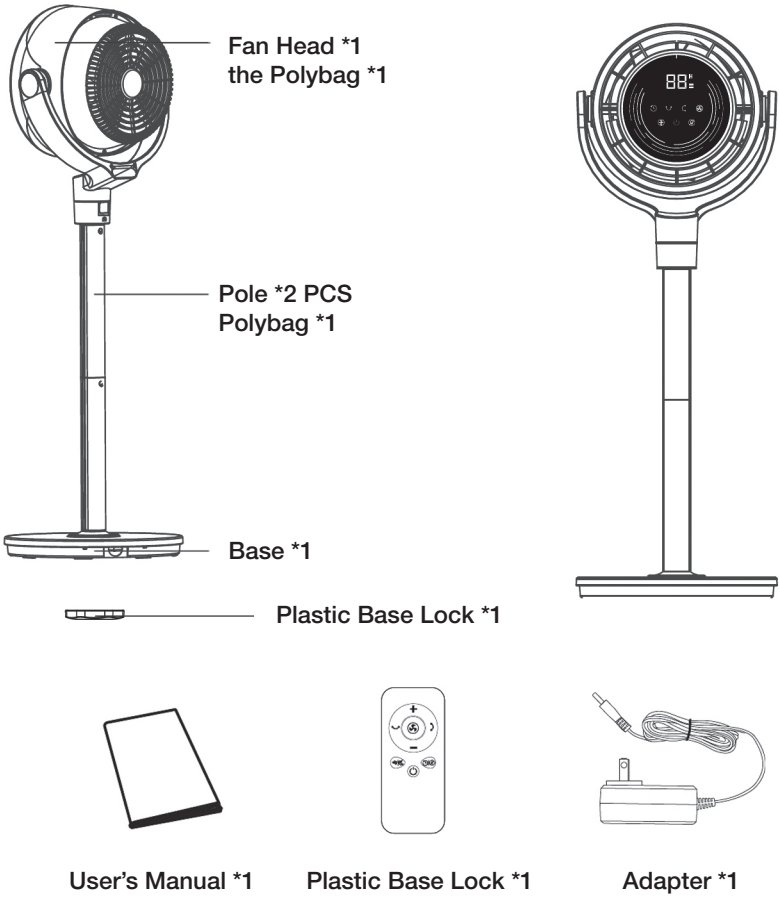

Fan Assembly

No tools required.

1. When using the fan for the first time, remove the wraps and attached parts by following the steps below.

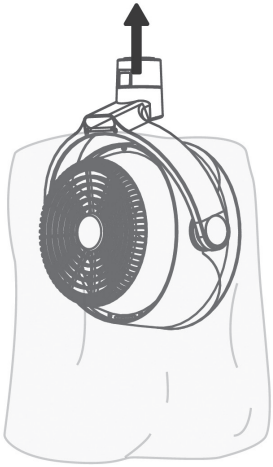

2. Gently place the circulator head face down on the ground on a soft cloth to avoid scratches or damages to the unit.

3. Remove the Base and the Pole Assembly

Find the Pole, the Base and the Plastic Base Lock.

Align the Lock Release Button on the Base with the hole located on the pole. Press the Lock Release Button on the Pole. Push the pole into the base until the Lock Release Button snaps into place.

With the fastening nut (Plastic Base Lock) secured on the underside of the base, rotate the fastening nut counter-clockwise to remove.

The upper pole and lower pole come pre-assembled.

4. Fan Head Assembly

Align the Lock Release Button on fan head with the hole located on the pole.

Push the pole onto the fan head until the Lock Release Button snaps into place.

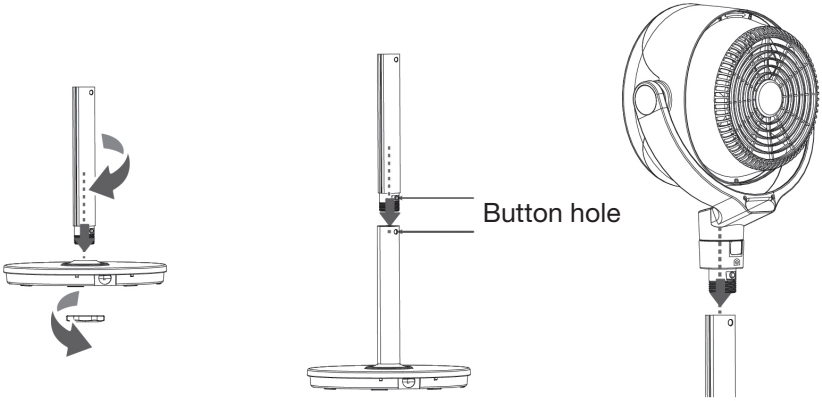

5. Adjusting Height Through Assembling the Poles

12”x 7” x 36”/26”/16”

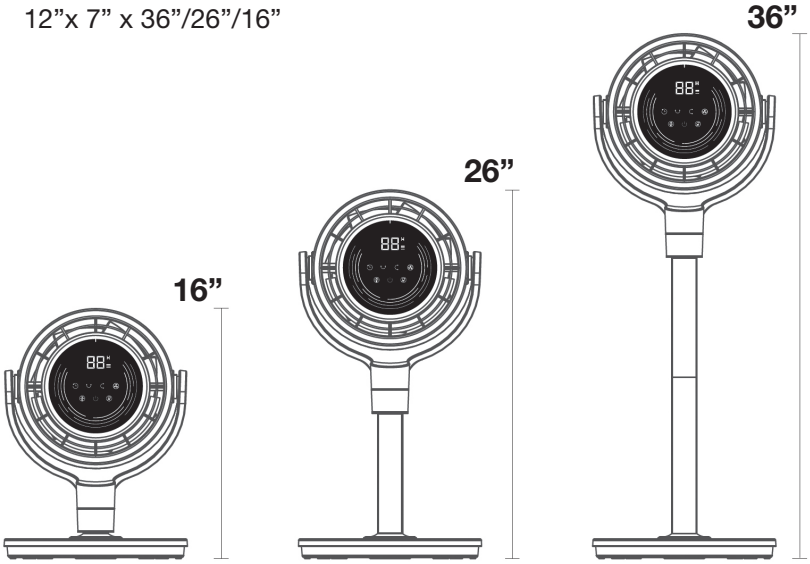

6. Plug the Power

Plug the power cord into the input socket (located at the back of the fan), and plug the power cord into an electrical outlet.

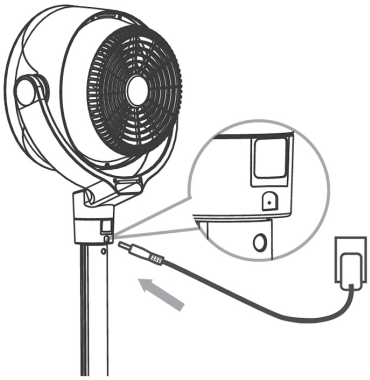

7. CAUTION

Do not operate the fan if the base has not been installed.

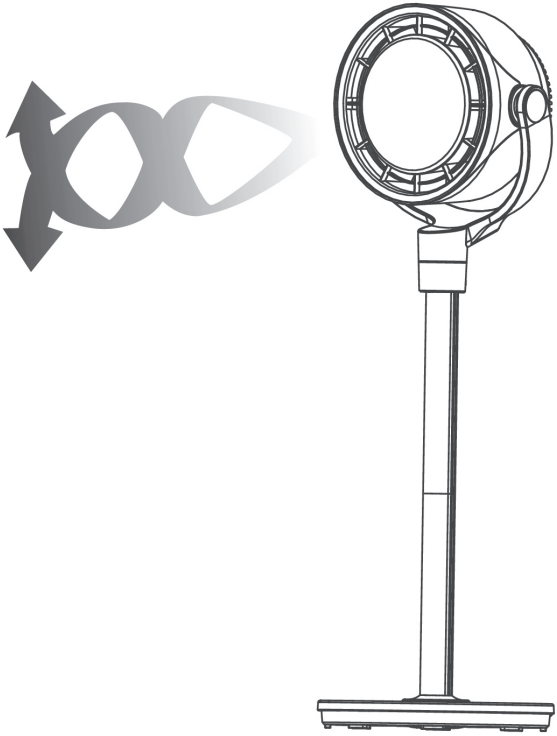

Controls and Display

Power Button
- Turn power on/off

Timer Button
- Setting the timer
  (from 1-12 hours)

Horizontal Oscillation Button
- Sweep airflow horizontally
  (0°/ 60°/ 90°/ 120°)

Increase Speed / Timer Button
- Increase airflow speed (1-12 Levels)
- Increase Timer (1-12 Hour)

Decrease Speed / Timer Button
- Decrease airflow speed (1-12 Levels)
- Decrease Timer (1-12 Hour)

Fan Speed
- 1-12 Fan Speeds to choose

Turbo/Sleep Button
- Turn on turbo fan (Highest Speed Fan)
- Turn on Sleep fan (used at night and turn off the light automatically)

Light Button
- Turn off the 7 colorful lights
- Turn off all LED lights on the display screen
- Wake the light by any button

Vertical Oscillation Button
- Sweep Airflow Vertically
  (0 / -15°-15 / -30°-30 / -30°-90°)

3 Modes to choose from:
- -15°-15° means oscillating downward 15° and upward 15°, total 30.
- -30°-30° means oscillating downward 30° and upward 30°, total 60°
- -30°-90° means oscillating downward 30° and upward 90°, total 120°

Quick Guide of General Operations

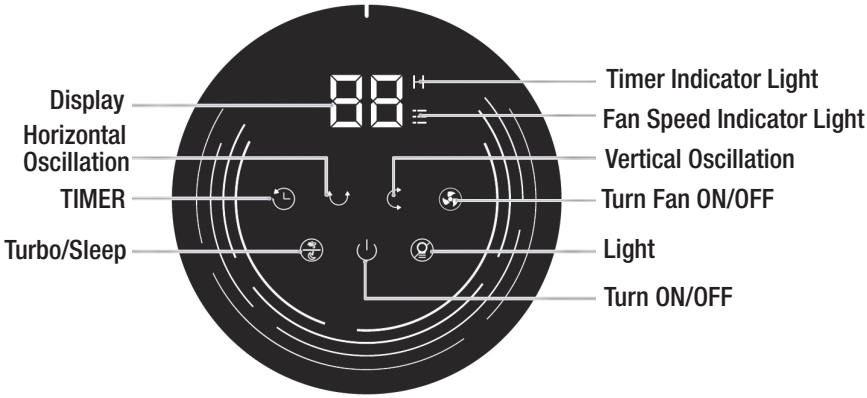

DETAILED OPERATING INSTRUCTIONS:

Turn ON/OFF	Touch ⏻ to power ON. Touch ⏻ again to power OFF. Note: 1. The fan is set on Fan Speed 06 by default for first time use. 2. Your fan returns to the last saved memory setting when the power is turned on/off after the first use.
Turn Fan	Description: Select desired fan speed by pressing on display OR -/+ on the Remote Control. **Operating:** Press and hold of display OR -/+ on the Remote Control to adjust speed up or down in 12 speed increments. Speed is indicated by number shown on Speed/ Timer Indicator Display.

Vertical Oscillation	**Description:** Sweep airflow vertically (0° / -15°-15° / -30°-30° / -30°-90°) **There has 3 Modes to choose from.** -15°-15°means oscillating downward 15° and upward 15°, total 30° -30°-30° means oscillating downward 30° and upward 30°, total 60° -30°-90° means oscillating downward 30° and upward 90°, total 120° **Operating:** Press of display or remote control to choose the vertical angle. Then it will sweep airflow vertically and choose angle automatically. Please note, horizontal (0° / -15°-15° / -30°-30° / -30°-90°), the display will show U1, U2, U3. During in vertical oscillating, press and it will stop oscillation and stay in that angle.

Horizontal Oscillation

Description: Oscillates airflow horizontally.
Choose from 3 angles: 0° / 60° / 90° / 120°.
Operating: Press on the display or remote control to choose the horizontal angle. Then it will oscillate airflow horizontally automatically at the chosen angle.
For horizontal oscillation (60° / 90° / 120°), the display will show L1, L2, L3. Press and it will stop oscillating.

TIMER

Description: When the fan is ON, touch the timer button repeatedly to set a timer from 1 to 8 hours. When the timer ends, the fan will automatically stop/start running. To cancel, set the time to 0 hours.
Note: When the auto off timer is enabled, the display will return to the set fan speed after 3 seconds.
Operating: Press to activate timer. The Timer Indicator light and the Display flashes " 00 " to indicate Timer Adjustment Mode. While in this mode, select amount of time in one-hour intervals by pressing / OR-/+ on Remote Control. After three seconds, flashing will stop and the display will show the number of hours the timer is set at. The display will return to the last speed selected. Touch to quickly tell how many hours are remaining on the timer.

Turbo/Sleep

Description: Select Turbo airflow or Sleep Airflow.
Operating: Press to choose Turbo fan or Sleep mode.
Note:
· **Turbo airflow:** The fan runs at the maximum speed.
· **Sleep airflow:** Mute is automatically on and it runs at a lower and quieter speed. No light is on.

Light

Description: Select to activate the 7 color Ambient lighting.
Operating: Press to turn off the light.

Memory

When the fan is turned OFF or disconnected from power, it will operate under the previous settings (except the Timer setting) when it is turned ON again.

Remote Control

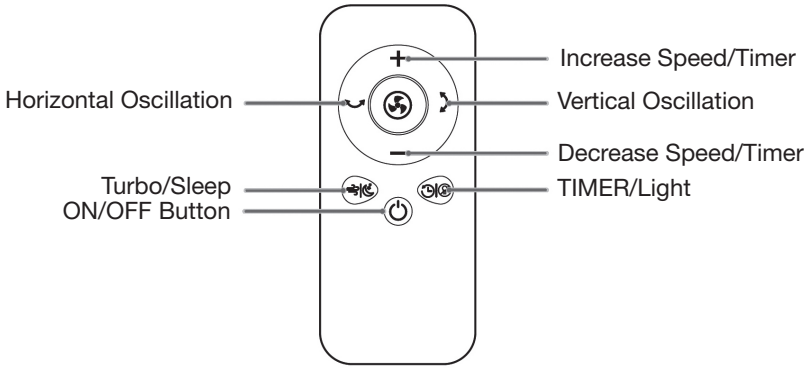

1. The remote control functions are the same as the control panel on the unit.
2. The remote requires a line-of-sight path to allow for the signal to be received by the unit. Point the remote control at the display panel for best reception.
3. Your remote includes (1) coin style **CR2025 3V** battery. Battery comes pre-installed. Remove any plastic protection from the battery before the first use and place it in the remote with the + side facing up. Ensure the battery is installed correctly with regard to polarity before using the remote.

BATTERY REPLACEMENT

1. Press the lock button to pop the battery holder open.
2. Replace with the same battery type with the (+) side facing up.
3. Push the holder in until it's securely locked into place.

Note: If the indicator on the remote control doesn't turn on any more, the battery needs replaced.

WARNING: This product contains a button battery. If swallowed, it could cause severe injury or death in just 2 hours. Seek medical attention immediately!

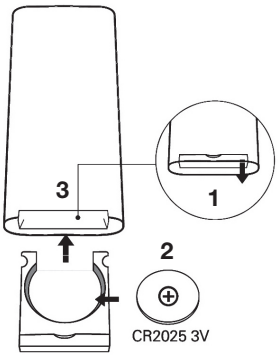

WARNING
Chemical Burn Hazard. Keep batteries away from children.

This product contains a lithium button/coin cell battery. If a new or used lithium button/coin cell battery is swallowed or enters the body, it can cause severe internal burns and can lead to death in as little as 2 hours. Always completely secure the battery compartment. If the battery compartment does not close securely, stop using the product, remove the battery, and keep it away from children. If you think batteries might have been swallowed or placed inside any part of the body, seek immediate medical attention.

The batteries must be disposed of properly, including keeping them away from children.

Even used batteries may cause injury.

MORE WAYS TO USE THE FAN

Getting the most out of your Fan

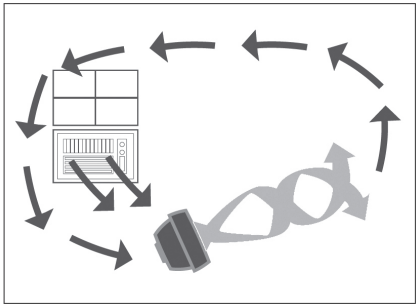

Summer: Use with an Air Conditioner
Position the air fan in front of your AC to circulate cold air and provide better cooling.

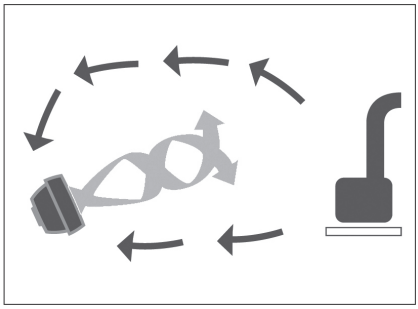

Winter: Use with a heater
Send the heat to corner of the room and circulate warm air faster.

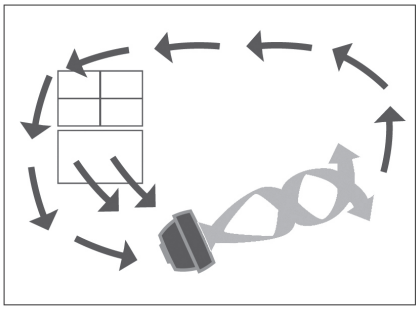

Spring & Fall Circulation
Put in front of an open window to make the indoors as fresh and pleasant as the outdoors.

Cleaning and Maintenance

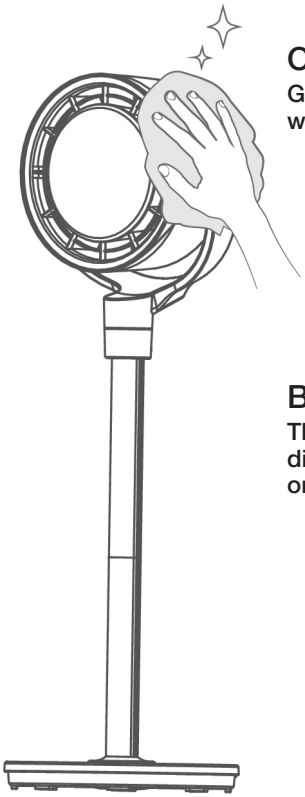

Outer Surface

Gently wipe off the dust with a soft, dry cloth.

Base and Pole

The base and pole can be disassembled in the reverse order of assembly.

CAUTION

1. Always unplug the fan before cleaning or maintenance to avoid the risk of fire, electric shock, or injury to persons.
2. Do not immerse in water or get water inside the motor housing.
3. Do not use any chemical agents (such as gasoline, thinners, solvents, ammonias or other chemicals) when cleaning the fan.
4. Store in a cool, dry place and cover it to protect from dust.

WARNING

1

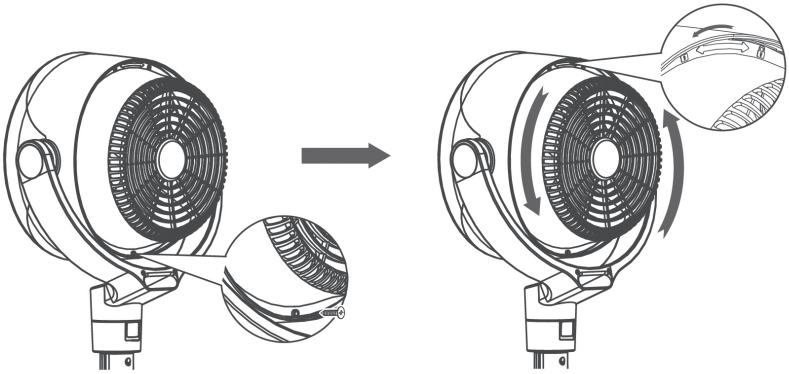

Remove the screws on the rear grills, rotate the grills counterclockwise to remove them.

2

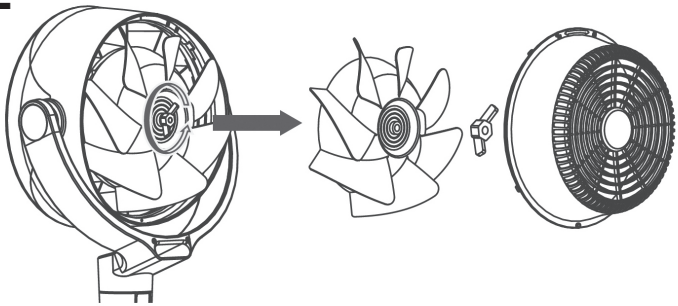

Remove the blade cap by rotating it as shown and take the blade assembly out of the shaft.

3

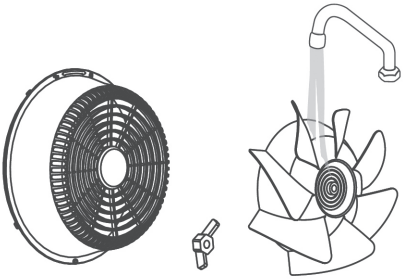

Rinse cap, blades, and grills under running water or with a clean, damp cloth.

4

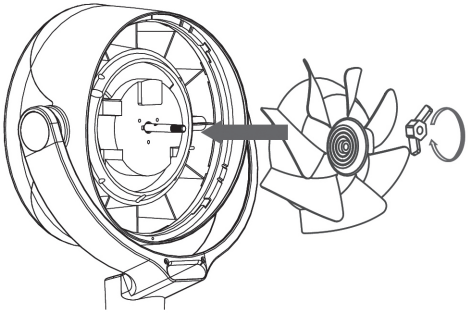

Thoroughly dry all parts, and insert the blade assembly back into the shaft by aligning the D-shaped points on the center.

5

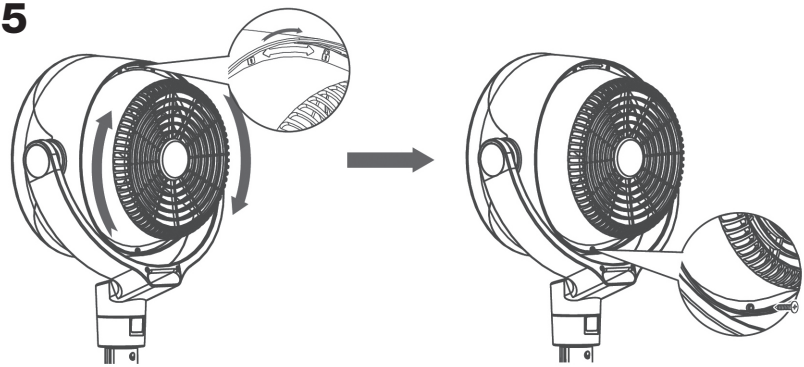

Align the point on the rear grill with the right point on the casing, then rotate the grill clockwise and install the screw back in place.

Troubleshooting

PROBLEM	POSSIBLE CAUSE AND SOLUTION
The unit won't turn on.	• Make sure that the cord is connected to a power outlet and the main voltage corresponds with the voltage indicated on the unit. • Ensure a fan speed setting is selected. • Unit is damaged or in need of repair. Unplug the unit and contact Consumer Service for assistance. • The outlet is worn or damaged. Try another outlet or contact a qualified electrician.
The fan is shaky and wobbling!	• Place the unit on a flat, level surface. • Incorrect installation might cause it to wobble. Please refer to the Assembly Instructions.
Airflow is weak or slow.	• The unit is set to a low speed setting. Adjust it to a higher speed setting. • Airflow is blocked. Remove obstruction.Adjust direction of airflow towards the user.
The fan is vibrating and making noise!	• Place the unit on a flat, level surface. • Be sure not to insert anything into the air inlet and outlet.
Remote control is not working.	The battery is dead and needs replaced. The remote requires a line-of-sight path to allow for the signal to be received by the unit. Position the unit so the receiver lens (located inside the display panel) is visible from the remote control

In the event your unit does not appear to be working properly or the trouble lights start blinking, contact customer service at **1-800-225-6595** or **custserv@edenpure.com**.

To place an order call **1-800-360-1070**
or go to **www.edenpure.com.**

EdenPURE®

EdenPURE®
7584 Whipple Avenue NW
N. Canton, OH 44720

©2025 EdenPURE® I-5921 BR12388R-1