Form No. 3353-864 Rev A

Light Kit
for Compact Utility Loaders

Part No. 100-8840 (4-Paw and TX Models)
Part No. 100-8940 (Chain Drive Models)

Installation Instructions

Loose Parts

Description	Qty.	Use
Bracket	2	Installation of the mounting bracket
Curved (Belleville) washer	2	
Self-tapping bolt	4	
Light assembly, with switch	1	Installation of the lights
Light assembly, without switch	1	
Flat washer	4	
Rubber grommet	2	
T-wire harness (kit 100–8940 only)	1	Upgrade the main wire harness on chain-drive traction units
Lighting wire harness	1	Wiring the lights
Plastic tie	1	

Preparing the Traction Unit

Note: If you are installing this kit on a chain-drive traction unit, skip this section.

1. Start the engine and raise the loader arms.
2. Stop the engine and remove the key.
3. Install the cylinder locks.
4. Remove/open the front hood; refer to you traction unit *Operator's Manual* for more information.

Upgrading the Wiring of Chain-Drive Traction Units

Note: If you are installing this kit on a 4-Paw or TX traction unit, skip this section.

1. Pull the main wire harness plug off of the back of the ignition switch.
2. Connect the T-wire harness to the main wire harness (Fig. 1).
3. Connect the T-wire harness to the back of the ignition switch (Fig. 1).

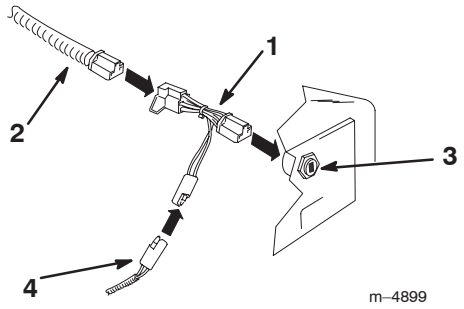

Figure 1

1. T-wire harness
2. Main wire harness
3. Ignition
4. Lighting wire harness

Drilling Installation Holes in Chain-Drive Traction Units

Note: If you are installing this kit on a 4-Paw or TX traction unit, skip this section.

Some of the older chain-drive traction units do not have holes drilled for the lights. Drill these holes as follows.

1. On the both sides of the frame, mark hole locations 2-5/8 in. (6.6 cm.) behind and 2 in. (5 cm) above the loader arm pivot centers (Fig. 2).

© 2005 by The Toro Company
8111 Lyndale Avenue South
Bloomington, MN 55420-1196

Contact us at www.Toro.com
All Rights Reserved
Printed in the USA

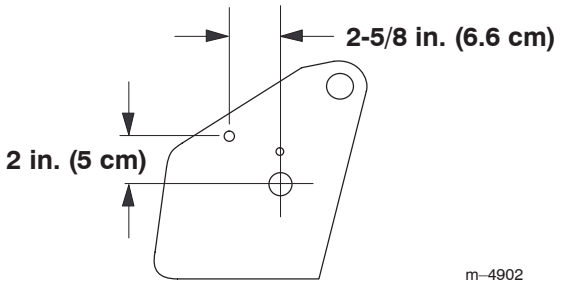

Figure 2

2. At each marked location, drill a size L (0.290 in. dia.) hole or drill and tap a 5/16–18 inch treaded hole.

Drilling Installation Holes in TX Traction Units

Note: If you are installing this kit on a 4-Paw or chain-drive traction unit, skip this section.

Some of the older TX traction units do not have holes drilled for the lights. Drill these holes as follows.

1. Measure in from the edges of the frame as illustrated in Figure 3 and mark the location of the first hole for mounting the shield bracket.

Note: If holes exist, skip this section.

2. Use the mounting bracket as a template to locate and mark the position of the second hole (Fig. 3).

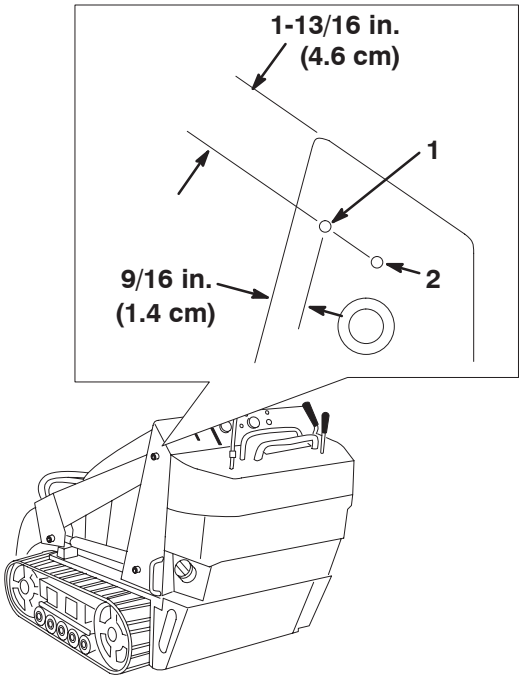

Figure 3

1. First mounting hole
2. Use the bracket as a template to locate this mounting hole.

3. At each marked location, drill a size L (0.290 in. dia.) hole or drill and tap a 5/16–18 inch treaded hole.

4. Repeat steps 1 and 3 for the other side of the traction unit.

Installing the Lights on a 4-Paw or Chain Drive Traction Unit

Note: If you are installing this kit on a TX traction unit, skip this section.

1. Install the brackets using 2 of the self-tapping bolts and curved washers (the cupped side of the washers should face the traction unit) (Fig. 4).

Note: If you are installing kit number 100–8840, there will be 2 extra bolts.

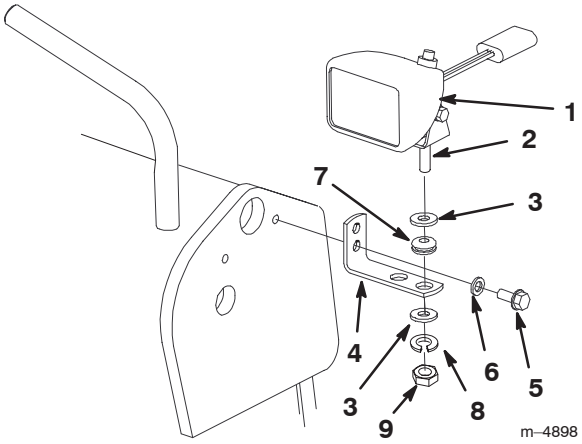

Figure 4

1. Light
2. Carriage bolt
3. Flat Washer
4. Bracket
5. Self-tapping bolt
6. Curved washer
7. Rubber grommet
8. Lockwasher
9. Nut

2. Remove and save the nut and lockwasher from the carriage bolt on each light assembly.

3. Place a flat washer on the carriage bolt on each light (Fig. 4).

4. Insert the rubber grommets into the outer holes in the brackets (Fig. 4)

5. Insert the carriage bolts on each light through the rubber grommets in the brackets (Fig. 4).

Note: Install the light with the switch on top of it on the left side of the traction unit.

6. Secure each light with a flat washer and the lockwasher and nut you removed in step 2 (Fig. 4).

Installing the Lights on a TX Traction Unit

Note: If you are installing this kit on a 4-Paw or chain-drive traction unit, skip this section.

1. Install the brackets using the 4 self-tapping bolts (Fig. 5).

Note: You will not use the curved washers.

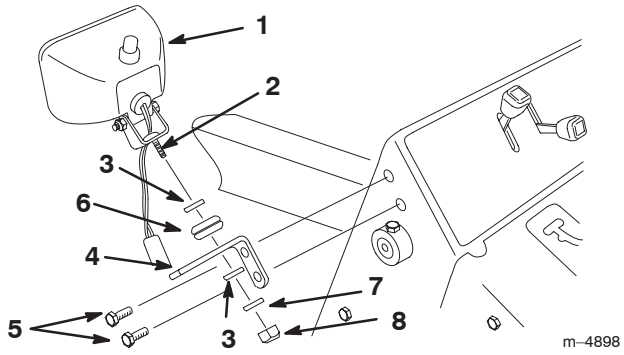

Figure 5

1. Light
2. Carriage bolt
3. Flat Washer
4. Bracket
5. Self-tapping bolt
6. Rubber grommet
7. Lockwasher
8. Nut

2. Remove and save the nut and lockwasher from the carriage bolt on each light assembly.

3. Place a flat washer on the carriage bolt on each light (Fig. 5).

4. Insert the rubber grommets into the inner holes in the brackets (Fig. 5)

5. Insert the carriage bolts on each light through the rubber grommets in the brackets (Fig. 5).

Note: Install the light with the switch on top of it on the left side of the traction unit.

6. Secure each light with a flat washer and the lockwasher and nut you removed in step 2 (Fig. 5).

Wiring the Lights on a 4-Paw or Chain-drive Traction Unit

Note: If you are installing this kit on a TX traction unit, skip this section.

Caution

If the traction unit has been running, the hot engine could burn you while you are routing the wire harness.

Allow the traction unit to cool completely before starting this procedure.

1. Connect the connector in the center of the lighting wire harness to the connector on the main wire harness (4-Paw traction units, Fig. 6) or T-wire harness (chain drive traction units, Fig. 1).

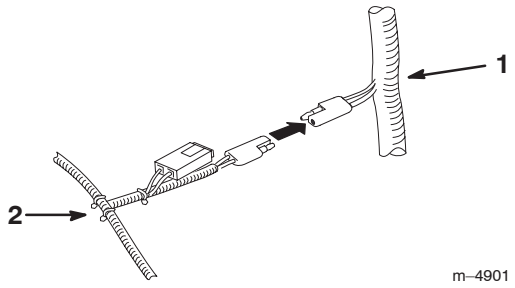

Figure 6

1. Main wire harness
2. Lighting wire harness

2. Route the wires from the lights around the inside of the operator grips.

3. Route the lighting wire harness to the sides of the traction unit and up to the top of the control panel (Fig. 7).

Note: Route the three pronged plug to the left side of the traction unit and the two pronged plug to the right.

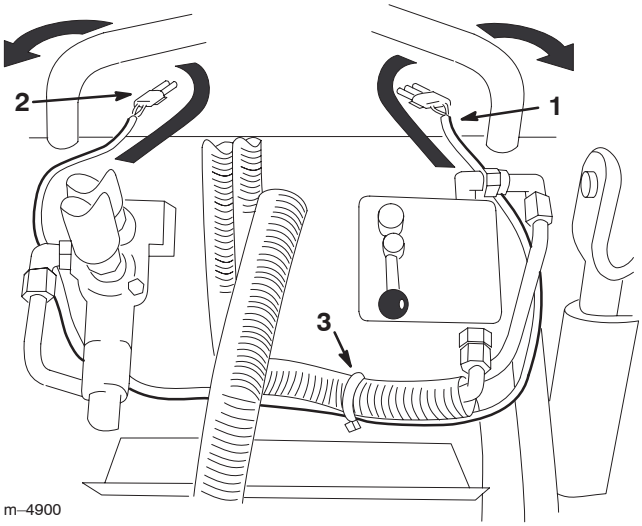

Figure 7

1. 3-prong connector
2. 2-prong connector
3. Plastic tie

4. Connect the lights to the wire harness.

5. Secure the wire harness to the hydraulic line connected to the bottom of the flow divider with a plastic tie (Fig. 7).

6. On 4-Paw traction units, start the traction unit, remove and store the cylinder locks, and lower the loader arms.

Wiring the Lights on a TX Traction Unit

Note: If you are installing this kit on a 4-Paw or chain-drive traction unit, skip this section.

Caution

If the traction unit has been running, the hot engine could burn you while you are routing the wire harness.

Allow the traction unit to cool completely before starting this procedure.

1. Remove the left and right control panel covers (Fig. 8).

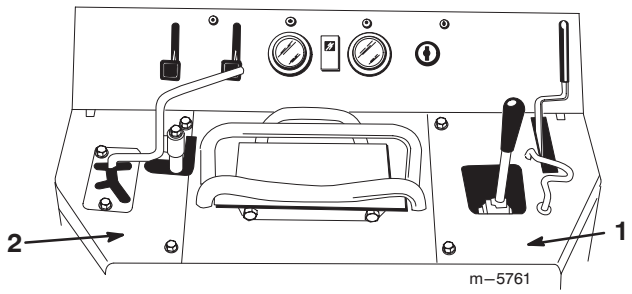

Figure 8

1. Right control panel cover 2. Left control panel cover.

2. Cut a slot in each cover 3/8 in. (1 cm) deep, 3/8 in. (1 cm) wide, and 3/4 in. (2 cm) from the edge of the cover as illustrated in Figure 9.

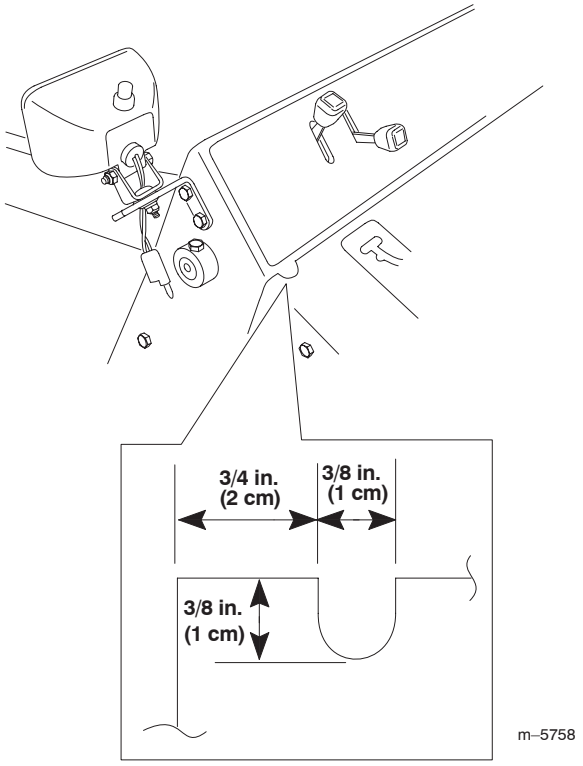

Figure 9

3. Route the lighting wire harness under the control panel with the connector at the center of the harness through the opening in the frame leading to the engine compartment (Fig. 10).

Note: Route the three pronged plug to the left side of the traction unit and the two pronged plug to the right.

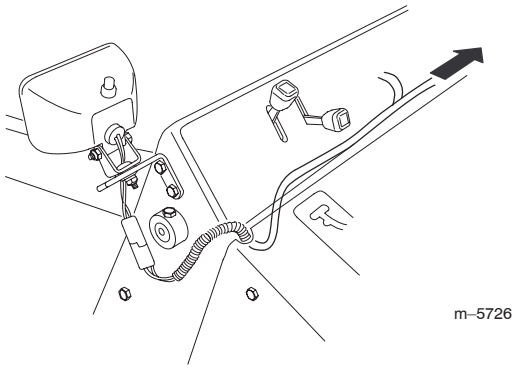

Figure 10

4. Install the right and left control panel covers with the ends of the lighting harness through the notches you cut previously (Fig. 10).

5. Connect the ends of the lighting harness to the connectors on each light.

6. Connect the connector in the center of the lighting wire harness to the connector on the main wire harness (Fig. 11).

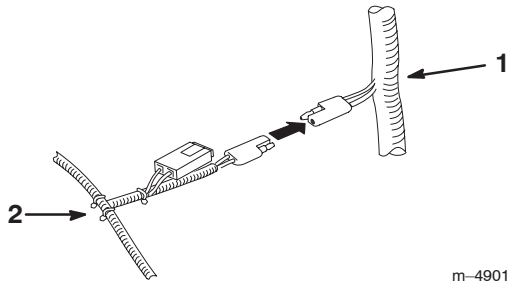

Figure 11

1. Main wire harness 2. Lighting wire harness

Operating the Lights

With the traction unit running, press the switch on top of the left light to turn on or off the lights.


TORO®