WORX NITRO

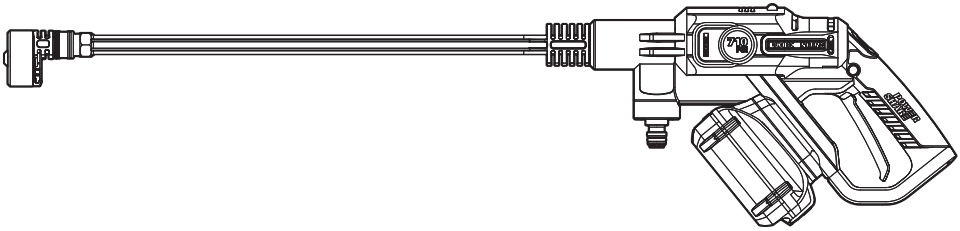

HYDROSHOT™

20V High flow Hydroshot	EN	P09
	F	P18
	ES	P27

HELPLINE NUMBER
NUMÉRO DU SERVICE D'ASSISTANCE
NÚMERO DE LÍNEA DE AYUDA
1-866-354-WORX (9679)

WG633 WG633.X

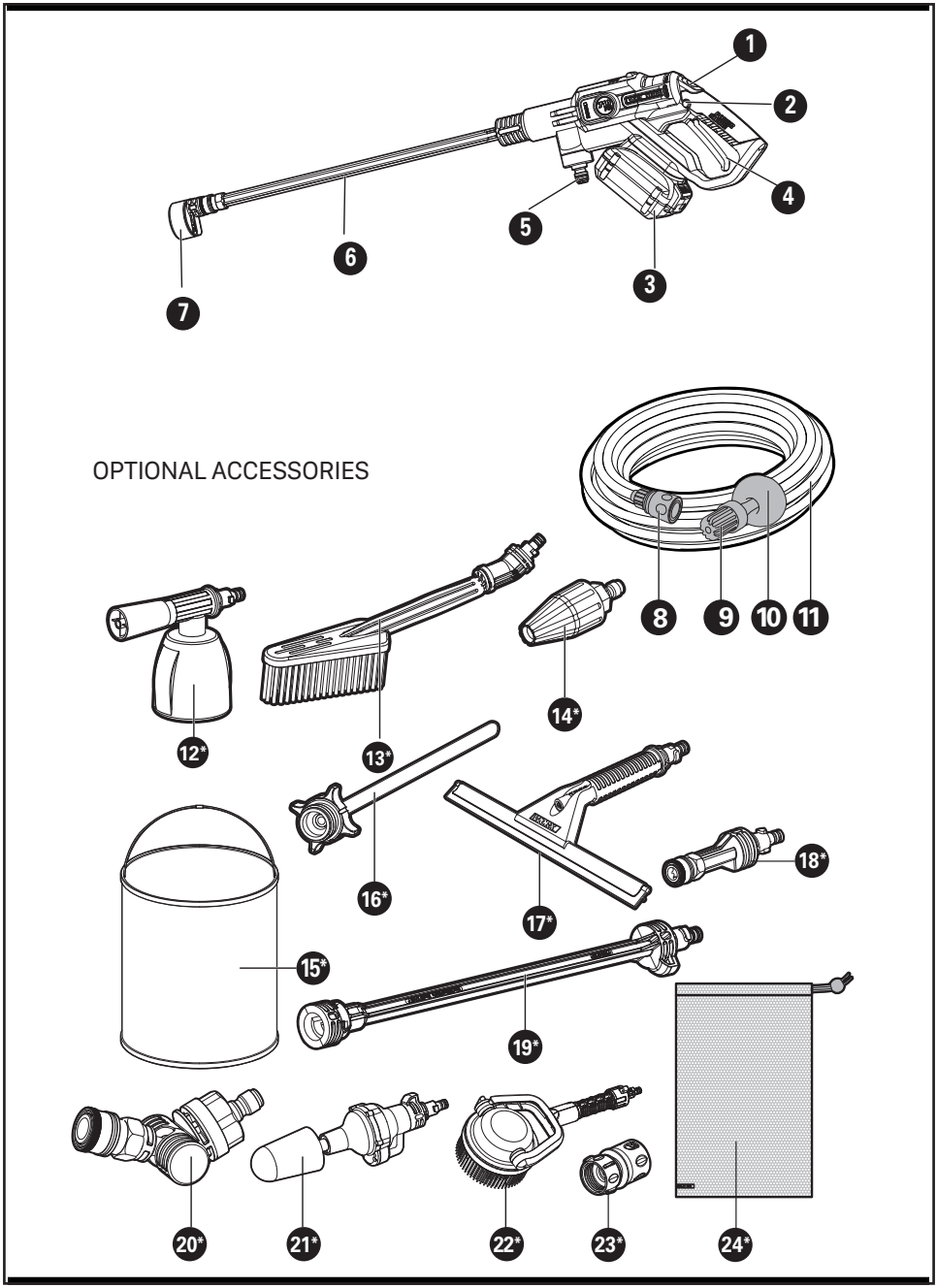
1
2
4
5
6
3
7
OPTIONAL ACCESSORIES
8
9
10
11
12*
13*
14*
16*
17*
18*
15*
19*
20*
21*
22*
23*
24*

A1

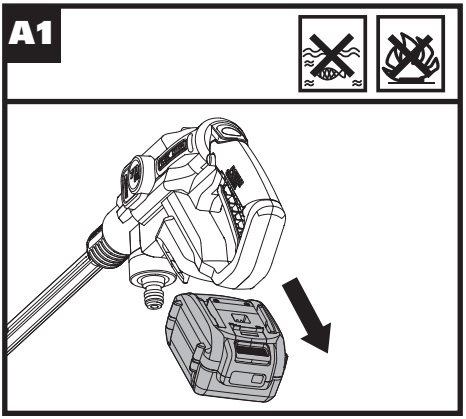

A2

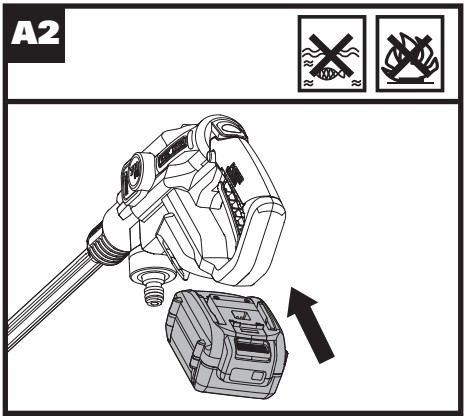

A3

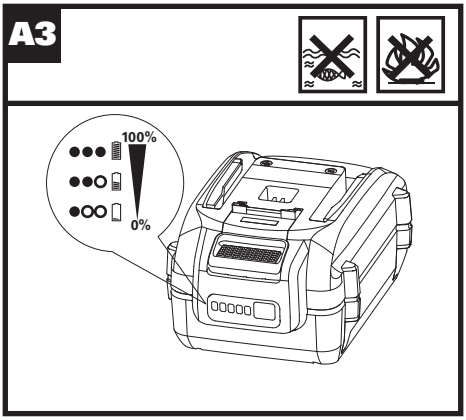

A4

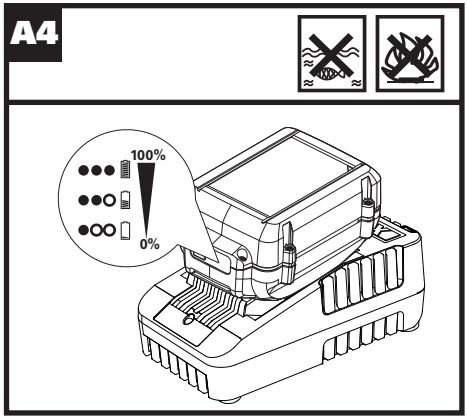

B1

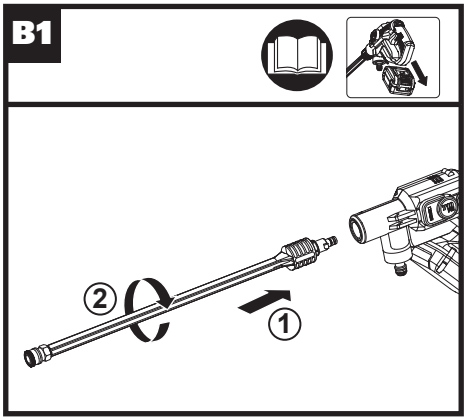

B2

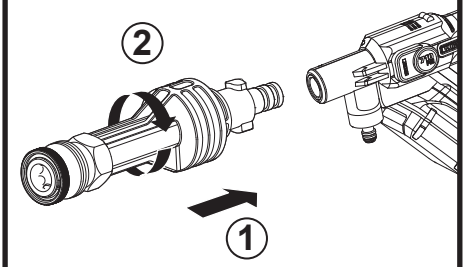

B3

Extension lance
sold separately.

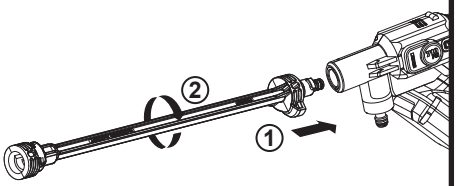

B4

Extension lance
sold separately.

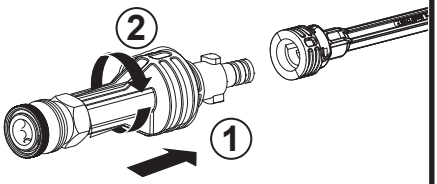

C

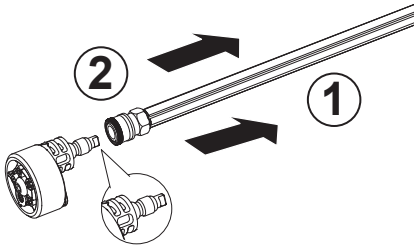

D1

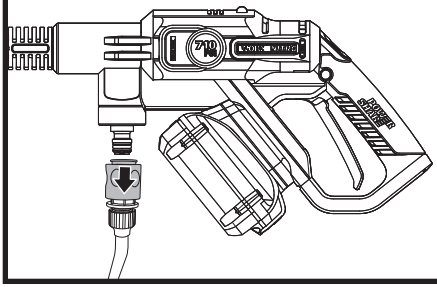

D2

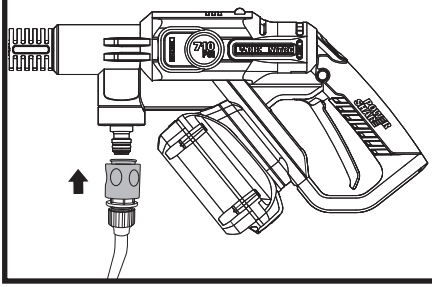

D3

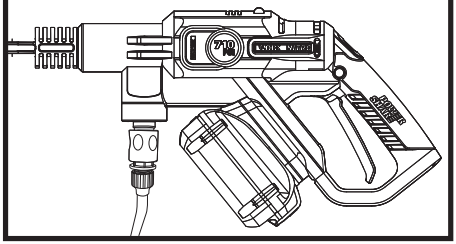

E1

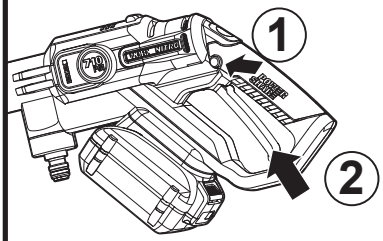

E2

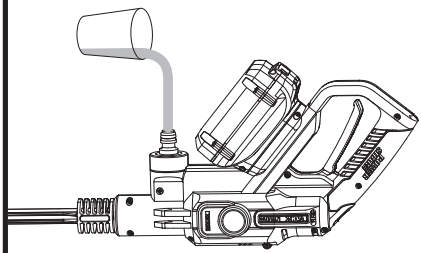

E3

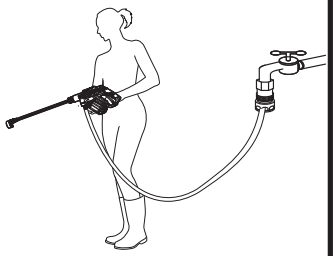

F

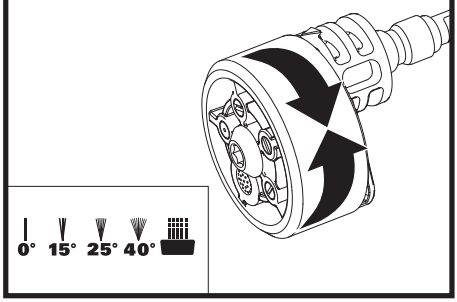

G

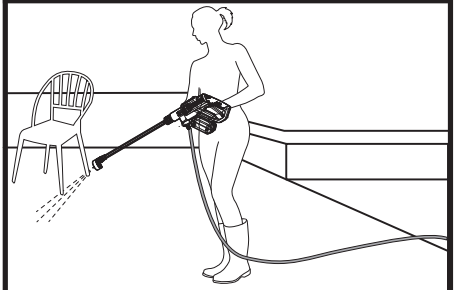

H

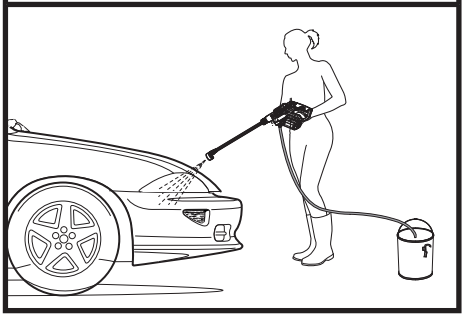

I

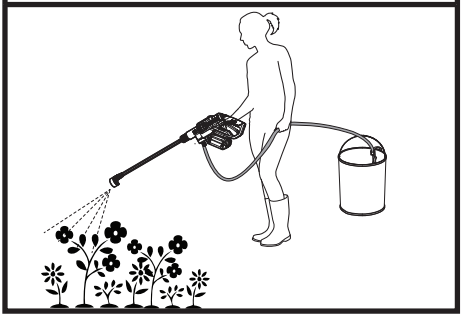

J*

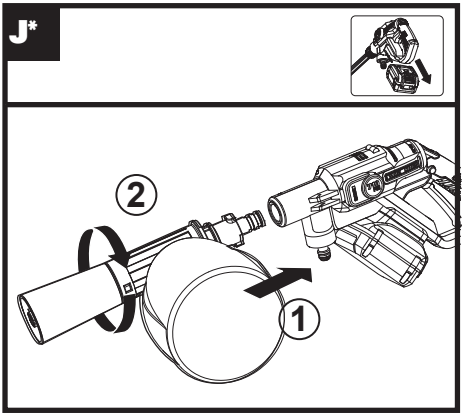

K*

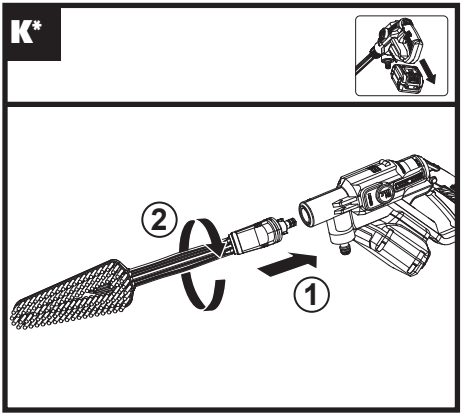

L1*

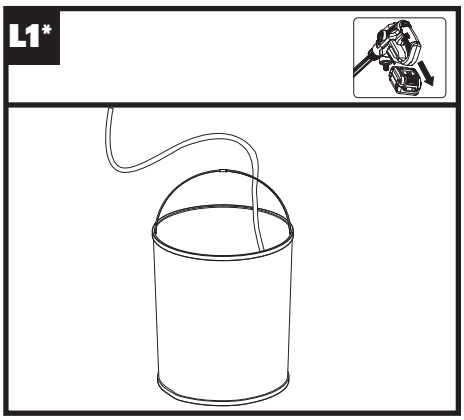

L2*

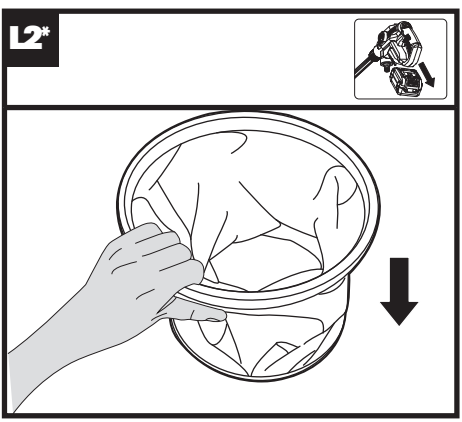

M*

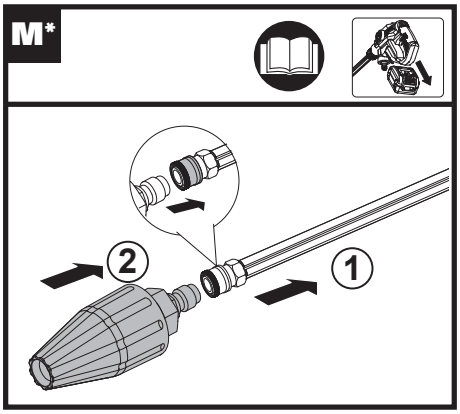

N1*

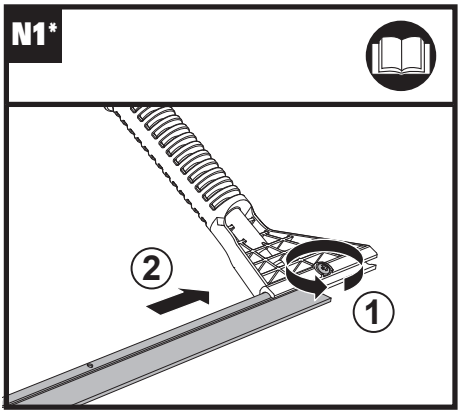

N2*

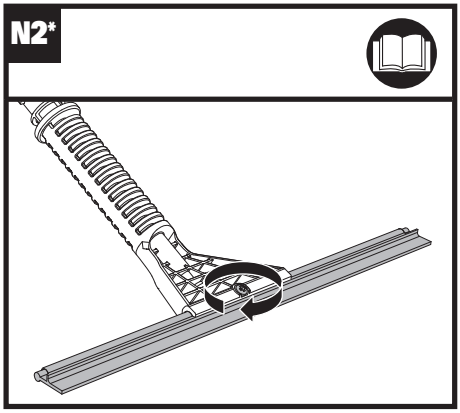

N3*

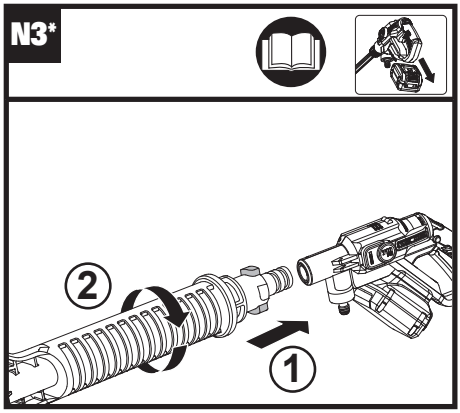

N4*

Extension lance
sold separately.

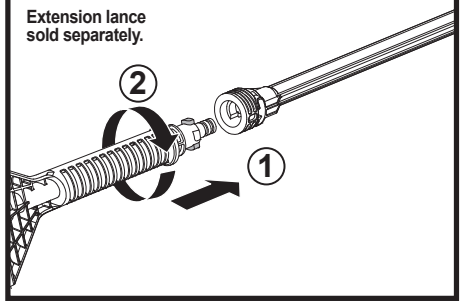

O1

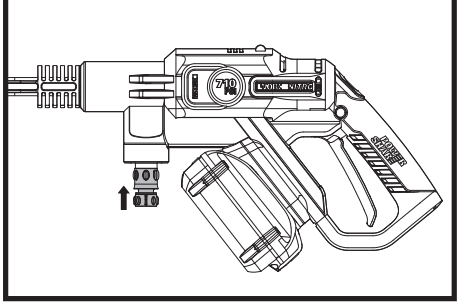

02

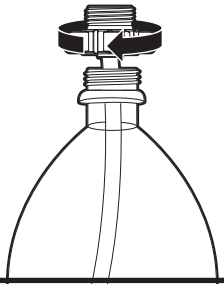

03

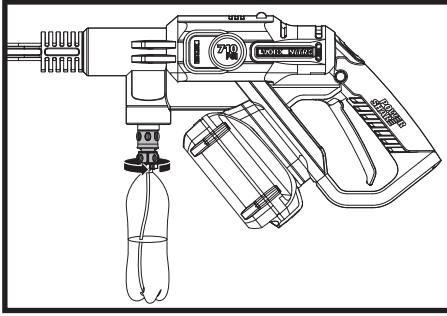

P1

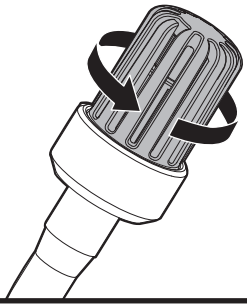

P2

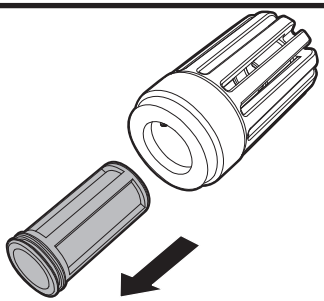

01*

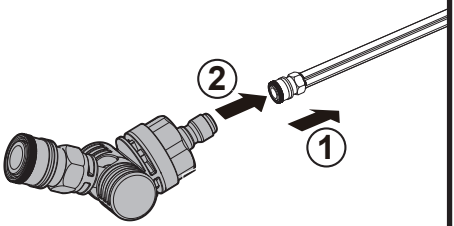

02*

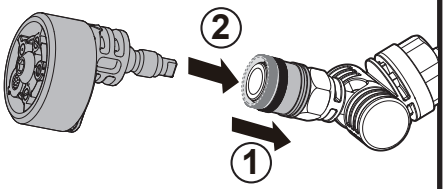

R*

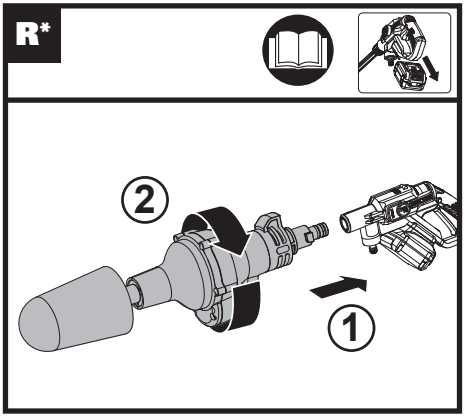

S*

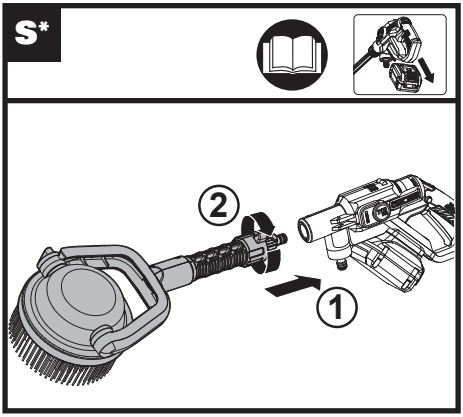

T*

Extension lance sold separately.

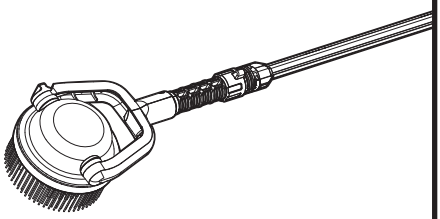

U*

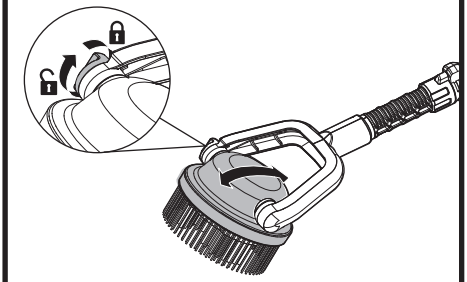

V

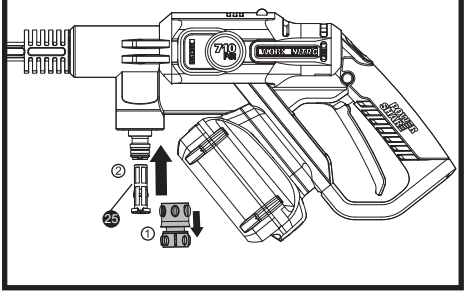

W

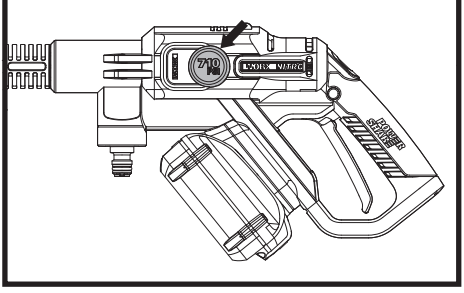

TABLE OF CONTENT

1. SAFETY INSTRUCTIONS
2. COMPONENT LIST
3. TECHNICAL DATA
4. INTENDED USE
5. OPERATING INSTRUCTIONS
6. ATTACHMENT OF ACCESSORIES
7. MAINTENANCE
8. CLEANING/STORAGE
9. ENVIRONMENTAL PROTECTION
10.TROUBLESHOOTING
11. DECLARATION OF CONFORMITY

1. SAFETY INSTRUCTIONS PRODUCT SAFETY GENERAL SAFETY WARNINGS



WARNING: Read all safety warnings and all instructions. Failure to follow the warnings and instructions may result in electric shock, fire and/or serious injury.

SAVE ALL WARNINGS AND INSTRUCTIONS FOR FUTURE REFERENCE.

IMPORTANT SAFETY INSTRUCTIONS

WARNING – When using this product basic precautions should always be followed, including the following:
1. Read all the instructions before using the product.
2. To reduce the risk of injury, close supervision is necessary when a product is used near children.
3. Know how to stop the product and bleed pressures quickly. Be thoroughly familiar with the controls.
4. Stay alert – watch what you are doing.
5. Do not operate the product when fatigued or under the influence of alcohol or drugs.
6. Keep operating area clear of all persons
7. Do not overreach or stand on unstable support. Keep good footing and balance at all times.
8. Follow the maintenance instructions specified in the manual.
9. WARNING – Risk of injection or injury– do not direct discharge stream at persons.
10. Do not spray electrical apparatus and wiring.

SAVE THESE INSTRUCTIONS

FOR ALL BATTERY – OPERATED GARDENING APPLIANCES

1. Prevent unintentional starting. Ensure the switch is in the off-position before connecting to battery pack, picking up or carrying the appliance. Carrying the appliance with your finger on the switch or energizing appliance that have the switch on invites accidents.
2. Disconnect the battery pack from the appliance before making any adjustments, changing accessories, or storing appliance. Such preventive safety measures reduce the risk of starting the appliance accidentally.
3. Recharge only with the charger specified by the manufacturer .A charger that is suitable for one type of battery pack may create a risk of fire when used with another battery pack.
4. Use appliances only with specifically designated battery packs. Use of any other battery packs may create a risk of injury and fire.
5. When battery pack is not in use, keep it away from other metal objects, like paper clips, coins, keys, nails, screws or other small metal objects, that can make a connection from one terminal to another. Shorting the battery terminals together may cause burns or a fire.
6. Under abusive conditions, liquid may be ejected from the battery; avoid contact. If contact accidentally occurs, flush with water. If liquid contacts eyes, additionally seek medical help. Liquid ejected from the battery may cause irritation or burns.
7. Do not use a battery pack or appliance that is damaged or modified. Damaged or modified batteries may exhibit unpredictable behavior resulting in fire, explosion or risk of injury.
8. Do not expose a battery pack or appliance to fire or excessive temperature. Exposure to fire or temperature above 130°C may cause explosion.
9. Follow all charging instructions and do not charge the battery pack or appliance outside of the temperature range specified in the instructions. Charging improperly or at temperatures outside of the specified range may damage the battery and increase the risk of fire.
10. Have servicing performed by a qualified repair person using only identical replacement parts. This will ensure that the safety of the product is maintained.
11. Do not modify or attempt to repair the appliance or the battery pack (as applicable) except as indicated in the instructions for use and care.

SAFETY WARNINGS FOR BATTERY PACK

a) Do not dismantle, open or shred battery pack.
b) Do not expose battery pack to heat or fire. Avoid storage in direct sunlight.
c) Do not short-circuit a battery pack. Do not store battery packs haphazardly in a box or drawer where they may short-circuit each other or be short-circuited by other metal objects. When battery pack is not in use, keep it away from other metal objects, like paper clips, coins, keys, nails, screws or other small metal objects, that can make a connection from one terminal to another. Shorting the battery terminals together may cause burns or fire.
d) Do not subject battery pack to mechanical shock.
e) In the event of battery leaking, do not allow the liquid to come in contact with the skin or eyes. If contact has been made, wash the affected area with copious amounts of water and seek medical advice.
f) Do not use any battery pack which is not designed for use with the equipment.
g) Keep battery pack out of the reach of children.
h) Always purchase the battery pack recommended by the device manufacturer for the equipment.
i) Keep battery pack clean and dry.
j) Wipe the battery pack terminals with a clean dry cloth if they become dirty.
k) Battery pack needs to be charged before use. Always use the correct charger and refer to the manufacturer's instructions or equipment manual for proper charging instructions.
l) Do not leave battery pack on prolonged charge when not in use.
m) After extended periods of storage, it may be necessary to charge and discharge the battery pack several times to obtain maximum performance.
n) Recharge only with the charger specified by Worx. Do not use any charger other than that specifically provided for use with the equipment.
o) Retain the original product literature for future reference.
p) Use only the battery pack in the application for which it was intended.
q) Remove the battery pack from the equipment when not in use.
r) Dispose of properly.
s) Do not mix cells of different manufacture, capacity, size or type within a device.
t) Keep the battery away from microwaves and high pressure.

SYMBOLS

	To reduce the risk of injury, user must read instruction manual
	Warning
	Read operator's manual
	Batteries may enter water cycle if disposed improperly, which can be hazardous for ecosystem. Do not dispose of waste batteries as unsorted municipal waste.
	Do not burn
 Li-Ion	Li-Ion battery, battery must be recycled
	Remove battery from the socket before carrying out any adjustment, servicing or maintenance.



call2recycle®

POSITEC Inc. has established a partnership with the RBRC Corporation to recycle any Positec batteries with the RBRC-call2recycle seal. For environmental protection, please do not discard batteries in the trash. After the batteries' life cycle is ended, please call 1-800-822-8837 for a free service that will properly dispose of the battery.

2. COMPONENT LIST

1.	**HI/LO PRESSURE-SETTING BUTTON**
2.	**LOCK-OFF SWITCH**
3.	**BATTERY PACK ***
4.	**ON/OFF TRIGGER**
5.	**HOSE QUICK-CONNECT ADAPTER**
6.	**PRESSURE CLEANING LANCE**
7.	**MULTI-SPRAY NOZZLE**
8.	**DRAW-HOSE QUICK-CONNECT ADAPTER**
9.	**DRAW-HOSE WATER FILTER**
10.	**FLOATER**
11.	**DRAW HOSE**
12.	**SOAP BOTTLE ***
13.	**BRUSH ***
14.	**TURBO NOZZLE ***
15.	**FOLDABLE WATER BUCKET ***
16.	**WATER BOTTLE ADAPTER***
17.	**SQUEEGEE ***
18.	**SHORT LANCE ***
19.	**EXTENSION LANCE ***
20.	**PIVOTING QUICK CONNECT ADAPTER***
21.	**ROTARY CLEANING BRUSH ***
22.	**ADJUSTABLE POWER SCRUBBER ***
23.	**QUICK CONNECT ADAPTER***
24.	**CARRY BAG***
25.	**WATER FILTER (SEE FIG. V)**

*** Not all the accessories illustrated or described are included in standard delivery.**

3. TECHNICAL DATA

Type: WG633 WG633.X (620-649 - designation of machinery, representative of battery-powered washer)

	WG633 WG633.X **
Voltage	20 V ⎓ Max***
Permissible pressure	5.6 MPa (710psi)****
Rated pressure	3.8 Mpa @high 2.5 Mpa @Eco
Max water flow rate	220 L/hr
Max. inlet water pressure	0.6 Mpa
Suction height Max	1.5m
Protection degree	IPX5
Water temperature	Max 40°C
Bare tool weight (with lance)	2.95lbs(1.34Kg)

**"The "X" noted at the end of the model number is a placeholder that represents a variation to the original model (kit contents or packaging change). "X" may be replaced with any number from "1" to "999" or English letter "A" to "Z" or "M1" to" M9".".
*** Voltage measured without workload. Initial battery voltage reaches maximum of 20 volts. Nominal voltage is 18 volts.
****Permissible pressure is checked by the following test: The pressure is increased to 110% of the allowable pressure, or by 1,5 Mpa for unheated machines, and the device shall operate.

SUGGESTED BATTERIES AND CHARGERS

Category	**Type**	**Capacity**
20V Battery	WA3012	4.0 Ah
20V Charger	WA3881	2.0 A

We recommend that you purchase your accessories from the same store that sold you the tool. Refer to the accessory packaging for further details. Store personnel can assist you and offer advice.

4. INTENDED USE

This tool is intended for cleaning and watering.

5. OPERATING INSTRUCTIONS

NOTE: Before using the tool, read the instruction book carefully.

ASSEMBLY & OPERATION

ACTION	FIGURE
BEFORE OPERATION	
Removing the battery pack	See Fig.A1
Installing the battery pack	See Fig. A2
Checking the battery condition **NOTE:** Fig. A3 only applies for the battery pack with battery indicator light.	See Fig. A3
Charging the battery pack More details can be found in charger's manual	See Fig. A4
ASSEMBLY	
NOTE: The power nozzle has three working modes: pressure cleaning lance only, short lance only and short lance used together with extension lance. Working mode 1 Attaching pressure cleaning lance to the power nozzle	See Fig. B1
Working mode 2 Attaching short lance to the power nozzle	See Fig. B2
Working mode 3 Attaching extension lance to the power nozzle Attaching short lance to the extension lance	See Fig. B3, B4
Attaching the Multi-spray nozzle **NOTE:** When attaching, rotate the nozzle left and right to make sure the nozzle is fully seated into position and gently pull it to make sure it is locked into position securely.	See Fig. C
Attaching the hose to the power nozzle **NOTE:** After the hose is attached, check the connection by gently pulling upon the hose. It should not be pulled off.	See Fig. D1, D2 , D3
OPERATION ⚠ **WARNING: The supplied battery is not waterproof. To avoid risk of battery failure,** **protect the battery from water exposure during use. Store the tool and battery in a dry place after use.**	
Start **NOTE:** At the first use or after long-term storage, it is recommended to attach the tap or inject water into the hose adapter with the machine turned on, so as to empty the air. Do not start working until the water goes up along the hose and sprays out.	See Fig. E1,E2,E3
Selecting the nozzle pattern **NOTE:** Choose a suitable nozzle pattern according to your work. Spray patterns 0°, 15°, 25° and 40° are applicable for cleaning, and the spray pattern with the symbol ▬ is best suitable for watering. ⚠ **WARNING:** Do not shift the nozzle pattern when the tool is powered on.	See Fig. F
Cleaning ⚠ **WARNING: Do not connect the machine to water supplies that are dirty, rusty, muddy, or corrosive. (Including window cleaning liquids, plant foods, or fertilizers etc.)** **NOTE:** If sea water is used, the product should be rinsed and used with fresh water after that in order to extend the life time of the machine.	See Fig. G, H
Watering	See Fig. I
⚠ **WARNING:**Permissible pressure is checked by the following test: The pressure is increased to 110% of the allowable pressure, or by 1,5 Mpa for unheated machines, and the device shall operate.	See Fig. W

6. ATTACHMENT OF ACCESSORIES

A number of accessories have been supplied with this product and are required for use in different applications. **Do not attempt to use cleaning without a lance or any accessories attached.**

1. Soap bottle (WA4036, sold separately)
Soap bottle provides detergent suds for deeper cleaning of dirt. It is used in conjunction with power nozzle. (See Fig. J)
NOTE: Keep the machine connected to water source when using soap bottle.

2. Brush (WA4048, sold separately)
Brush is for cleaning cars, boats, motorcycles etc. It is used in conjunction with power nozzle. (See Fig. K)

3. Foldable water bucket (WA4015, sold separately)

Foldable water bucket allows you to connect to water supply when you are far away from a water source. When not in use, it can be folded for storage. (See Fig. L1, L2)

4. Turbo nozzle (WA4037, sold separately)
The turbo nozzle delivers 360° of rotating water, which cleans a larger area than the 0° water pattern during the same time period. Recommend to use it with high pressure setting (See Fig. M)

5. Window squeegee with water sprayer (WA4050, sold separately)
The window squeegees quick connection easily snaps into the tool to spray water or wipe off water from glass or tiled surfaces. Suitable for the HydroShot power cleaner or the extension lance. (See Fig. N1, N2, N3, N4)

6. Bottle cap connector (WA4038)
The bottle cap connector accessory allows the tool to directly connect with most 2 Liter bottles with approximately 1" openings. (NOTE: May not fit all consumable soda and water bottles) (See Fig. O1, O2, O3)
⚠ **WARNING:** Do not install the bottle cap connector accessory until it is ready to be used. The accessories vents will leak liquid, if a bottle is installed, with the machine lying on a surface.

7. Pivoting Quick Connect Adapter (WA4039, sold separately)
The Pivoting Quick Connect Adapter allows power cleaning tips to be fully adjusted up to 180° in any direction. Ideal for cleaning around hard-to-reach areas. Suitable for the HYDROSHOT™ power cleaner and multi-spray nozzle (See Fig. Q1, Q2)

8. Rotary Cleaning Brush (WA4042, sold separately)
The rotary cleaning brush accessory easily snaps into the tool for cleaning sensitive surfaces and around tight spaces. Suitable for the HYDROSHOT™ power cleaner with/without the extension lance installed. (See Fig. R)

9. Adjustable Power Scrubber (WA1820/WA1821, sold separately)
The water powered rotary scrubber accessory easily snaps into the tool for cleaning hard surfaces. Suitable for the HYDROSHOT™ power cleaner with/without the extension lance installed. (See Fig. S, T, U) The soft scrubber (WA1820) is applicable for sensitive surfaces and the hard bristle scrubber (WA1821) is applicable for cleaning hard surfaces (not recommended for cars and surfaces that could be scratched).

7. MAINTENANCE

Remove the Battery Pack from the tool before carrying out any adjustment, servicing or maintenance.
Inspect the product for damaged or worn parts before each use. Do not operate it if you find damaged or worn parts. Contact your supplier or the manufacturer for replacement parts.
Hose filter maintenance
Unscrew the hose filter from the hose and remove the strainer. Rinse the parts with clean water before reassembling. (See Fig. P1, P2)
Filter maintenance (See Fig. V)
Rinse it with clean water before reassembling.
NOTE: When retightening the hose adapter, please tighten securely. Otherwise, it may not draw any water for proper operation.
⚠ **WARNING:** Any other servicing should be performed by an authorized service representative.

8. CLEANING/STORAGE

Before Storage, completely drain all the water from the machine and hose.
Clean the moulded plastic housing of the machine using a soft brush and clean cloth. Do not use water, solvents or polishes. Store in a secure and dry place out of the reach of children. Do not place other objects on the product.
Store the machine and the accessories in a frost free place.

9. ENVIRONMENTAL PROTECTION

Waste electrical products must not be disposed of with household waste. Please recycle where facilities exist. Check with your local authorities or retailer for recycling advice.

10. TROUBLESHOOTING

Symptom	Possible causes	Solution
Machine turns on but it does not draw any water or there is not sufficient pressure.	Hydroshot is being held too high from the water source. NOTE: The higher the Hydroshot is held in the air, the harder the pump needs to work to draw water (up) against gravity.	Hold the Hydroshot lower to the ground (less than 5' off of the ground) to improve water flow.
	Hose filter is blocked.	Take out the hose filter and rinse the parts with clean water. (See Fig. Q1, Q2)
	The users garden hose is not well connected to the machine.	Check and reattach the garden hose tightly. (See Fig. E2)
	Hose Quick-Connect Adapter gets loose.	Tighten the hose adapter securely with a wrench.
	The filter is missing. (See Fig. R)	Contact customer service to request a replacement part.
	The filter screen is blocked. (See Fig. R)	Clean the filter screen regularly.
	Pump, hose, or other parts are frozen due to outside temperatures.	Wait for the pump, hose or other parts to thaw.
	Hose kinks.	Straighten out the hose.
	An excessive amount of air can be in the hose and Hydroshot.	If air builds up within the hose or pump, the water pressure will drop. 1) Hold the Hydroshot lower to the ground (less than 5' off of the ground) to improve water flow. 2) "Pre-fill the draw-hose" completely with water to ensure all air is removed. 3) Operate the hydroshot without the lance or nozzle attached to allow a higher volume of water to quickly and easily flow throw the unit. Once all air pockets appear to be removed, reinstall the lance and nozzle. 3) Connect directly to a water spigot with garden hose to clear all air from the system. Refer to figures I1, I2, I3.
Multi-spray nozzle leaks.	The nozzle pattern does not spray correctly.	Make sure the nozzle pattern symbol aligns with the indicator mark on tool.
	Air built up within the hose or pump.	Continue to operate the machine for a few moments until leakage stops. Refer to comments from above to remove air pockets.
Outlet pressure increases suddenly.	Multi-spray nozzle is blocked.	Clear any visible debris with a small object such as a paper clip. Replace with a new multi-spray nozzle.
Machine drains out water after stopping.	There is water remaining in the lance and pump after stopping.	Remove batteries and hoses. Press trigger and rotate the Hydroshot in various directions to allow all water to drain.
Soap accessory cannot spray out any detergent.	Blockage in the soap bottle.	Clean it with fresh water.
	The machine is not connected to the water source.	Connect to the water source before turning on the machine.

Machine does not start.	The battery pack is not attached well.	Reinstall the battery pack.
	Battery pack charge has been depleted.	Replace with a new battery pack or recharge the battery pack.
	Defective battery.	Replace with a new battery pack.
Machine pressure is not consistent.	Additional air could be sucked into the machine.	Check connection between the hose adapter and the draw hose.
	It is at low pressure setting.	No action need.
Machine stops automatically.	Battery pack charge has been depleted.	Replace with a new battery pack or recharge the battery pack.
	The multi-spray nozzle is blocked. The current protection is activated.	Remove the multi-spray nozzle and turn on the machine. If the machine works normally, replace with a new multi-spray nozzle.
The end of the draw hose will not stay submerged.	There is air remaining in the draw hose and/or the float is not adjusted properly.	Ensure all air is removed from draw hose. Adjust float location on draw hose to allow filter to sit well below water's surface, yet just above water source's bottom where filter may quickly fill with debris.
Machine does not draw any water after long time storage.	Additional air could be sucked into the machine.	1) Hold the Hydroshot lower to the ground (less than 5' off of the ground) to improve water flow. 2) "Pre-fill the draw-hose" completely with water to ensure all air is removed. 3) Operate the hydroshot without the lance or nozzle attached to allow a higher volume of water to quickly and easily flow throw the unit. Once all air pockets appear to be removed, reinstall the lance and nozzle. 3) Connect directly to a water spigot with garden hose to clear all air from the system. Refer to figures I1, I2, I3.