SHARP®

OPERATION MANUAL AND INSTALLATION INSTRUCTIONS

UNDER CABINET RANGE HOOD

MODEL: SHN3033MS

CUSTOMER ASSISTANCE 2

CONSUMER LIMITED WARRANTY 3

BEFORE INSTALLING THE RANGE HOOD 4

APPEARANCE AND RANGE HOOD DIMENSIONS 5

RANGE HOOD MAIN PARTS 6

PRODUCT SPECIFICATIONS 7

INSTALLATION INSTRUCTIONS 8-13

OPERATIONS 14

CLEANING & MAINTENANCE 15

TROUBLE SHOOTING 16

Under Cabinet Range Hood: Model SHN3033MS

CUSTOMER ASSISTANCE

UNITED STATES ONLY

REGISTER YOUR PRODUCT

Registering your new product is easy and offers benefits that help you get the most out of your Sharp product including:

- ✓ **Convenience**: If you ever need warranty support, your product information is already on file.
- ✓ **Communication**: Stay up to date with important notifications and special offers from SHARP.
- ✓ **Support**: Quickly access support content including Owner's Manuals, FAQ's, How-to Videos, and much more.

3 EASY WAYS TO REGISTER TODAY!

SCAN
Use the camera or QR code scanning application on your mobile device

ONLINE
Visit our sites to learn more about your product at sharpusa.com and sbl.sharpusa.com

CALL US
US **800-BE-SHARP** 800-237-4277

Scan this QR Code on your mobile device | **Visit http://www.sharpusa.com/register** | **Contact a Sharp Advisor on the phone**

PRODUCT SUPPORT

If you have questions about the setup or operation of your product, please refer to the corresponding section within this manual.

Additionally, visit www.sharpusa.com/support to access exclusive content about your product including:

- → FAQ's and How-To Videos
- → Find or Request Service
- → Extended Warranty Options
- → Downloads including the Installation Guide, Spec Sheet, and Owner's Manual

CONTACT US

If at any time you have questions or comments concerning your SHARP product, please contact the SHARP Customer Assistance Center. We are available to assist you through multiple contact methods for your convenience:

EMAIL
Available 24/7
US: sharpusa.com

CHAT ONLINE

CALL US
US **800-BE-SHARP** 800-237-4277

See the Contact Us section on our sites | **U.S. | www.sharpusa.com/support** | **Contact a Sharp Advisor on the phone**

CONSUMER LIMITED WARRANTY

CONSUMER LIMITED WARRANTY FOR U.S. USERS

SHARP ELECTRONICS CORPORATION warrants to the first consumer purchaser that this Sharp brand product (the "Product"), when shipped in its original container, will be free from defective workmanship and materials, and agrees that it will, at its option, either repair the defect or replace the defective Product or part thereof with a new or remanufactured equivalent at no charge to the purchaser for parts or labor for the period(s) set forth below.

This warranty does not apply to any appearance items of the Product nor to the additional excluded item(s) set forth below nor to any Product the exterior of which has been damaged or defaced, which has been subjected to improper voltage or other misuse, abnormal service or handling, or which has been altered or modified in design or construction.

In order to enforce the rights under this limited warranty, the purchaser should follow the steps set forth below and provide proof of purchase to the servicer.

The limited warranty described herein is in addition to whatever implied warranties may be granted to purchasers by law. ALL IMPLIED WARRANTIES INCLUDING THE WARRANTIES OF MERCHANTABILITY AND FITNESS FOR USE ARE LIMITED TO THE PERIOD(S) FROM THE DATE SET FORTH BELOW. Some states do not allow limitations on how long an implied warranty lasts, so the above limitation may not apply to you.

Neither the sales personnel of the seller nor any other person is authorized to make any warranties other than those described herein, or to extend the duration of any warranties beyond the time period described herein on behalf of Sharp.

The warranties described herein shall be the sole and exclusive warranties granted by Sharp and shall be the sole and exclusive remedy available to the purchaser. Correction of defects, in the manner and for the period of time described herein, shall constitute complete fulfillment of all liabilities and responsibilities of Sharp to the purchaser with respect to the Product, and shall constitute full satisfaction of all claims, whether based on contract, negligence, strict liability or otherwise. In no event shall Sharp be liable, or in any way responsible, for any damages or defects in the Product which were caused by repairs or attempted repairs performed by anyone other than an authorized servicer. Nor shall Sharp be liable or in any way responsible for any incidental or consequential economic or property damage. Some states do not allow the exclusion of incidental or consequential damages, so the above exclusion may not apply to you.

THIS LIMITED WARRANTY IS VALID ONLY IN THE FIFTY (50) UNITED STATES, THE DISTRICT OF COLUMBIA AND PUERTO RICO.

Your Product Model Number & Description:	SHN3033MS Under the Cabinet Range Hood. Be sure to have this information available when you need service for your Product.
Warranty Period for this Product:	One (1) year parts and labor from date of purchase or delivery.
Additional Item(s) Excluded From Warranty Coverage:	Appearance items of the Product, filters, accessories, or any printed materials. Product which has been use for commercial purposes and negligence.
Where to Obtain Service:	From a Sharp Authorized Servicer located in the United States. To find the location of the nearest Sharp Authorized Servicer, call Sharp Toll Free at 1-800-BE-SHARP.
What to Do to Obtain Service:	Be sure to have Proof of Purchase and Delivery Date, Model, and Serial Number available.

TO OBTAIN SERVICE, SUPPLY, ACCESSORY OR PRODUCT INFORMATION, CALL 1-800-BE-SHARP, OR VISIT OUR WEBSITE AT www.sharpusa.com

SAVE THE PROOF OF PURCHASE AS IT IS NEEDED SHOULD YOUR UNDER THE CABINET RANGE HOOD EVER REQUIRE WARRANTY SERVICE.

SHARP®

SHARP ELECTRONICS CORPORATION

100 Paragon Drive, Montvale, NJ 07645, U.S.A.

BEFORE INSTALLING THE RANGE HOOD

READ AND SAVE THESE INSTRUCTIONS TO REDUCE THE RISK OF FIRE, ELECTRIC SHOCK, OR INJURY TO PERSON(S) OBSERVE THE FOLLOWING:

1. Use this unit only in the manner intended by the manufacturer. If you have questions, contact the manufacturer at the address or telephone number listed in the warranty.
2. Before servicing or cleaning unit, switch power off at service panel and lock service disconnecting means to prevent power from being switch on accidentally. When the service disconnecting means cannot be locked, securely fasten a prominent warning device, such as a tag, to the service panel.
3. Installation work and electrical wiring must be done by qualified personnel in accordance with all applicable codes and standards, including fire-rated construction codes and standards.
4. Sufficient air is needed for proper combustion and exhausting of gases through the duct of fuel burning equipment to prevent backdrafting. Follow the heating equipment manufacturer's guidelines and safety standards such as those published by the National Fire Protection Association (NFPA), the American Society for Heating, Refrigeration and Air Conditioning Engineers (ASHRAE) and the local code authorities.
5. This product may have sharp edges. Be careful to avoid cuts and abrasions during installation or cleaning.
6. When cutting or drilling into wall or ceiling, do not damage electrical wiring and other hidden utilities.
7. Ducted fans must always be vented to the outdoors.
8. Do not use this unit with any other solid-state speed control device.
9. Use only metal ductwork.
10. This unit must be grounded.

TO REDUCE THE RISK OF A RANGE TOP GREASE FIRE:

1. Never leave surface units unattended at high settings. Boilovers cause smoking and greasy spillovers that may ignite. Heat oils slowly on low or medium settings.
2. Always turn hood ON when cooking at high heat or when cooking flaming foods (i.e. Crêpes Suzette, Cherries Jubilee, Peppercorn Beef Flambé).
3. Clean ventilating fans frequently. Grease should not be allowed to accumulate on fan or filters.
4. Use proper pan size. Always use cookware appropriate for the size of the surface element.

⚠ WARNING TO REDUCE THE RISK OF INJURY TO PERSON(S) IN THE EVENT OF A RANGE TOP GREASE FIRE, OBSERVE THE FOLLOWING*:

1. SMOTHER FLAMES with a close-fitting lid, cookie sheet, or metal tray, then turn off the burner. BE CAREFUL TO PREVENT BURNS. IF THE FLAMES DO NOT GO OUT IMMEDIATELY, EVACUATE AND CALL THE FIRE DEPARTMENT.
2. NEVER PICK UP A FLAMING PAN – You may be burned.
3. DO NOT USE WATER, including wet dishcloths or towels – This could cause a violent steam explosion.
4. Use an extinguisher ONLY if:
   - **A** You know you have a Class ABC extinguisher and you know how to operate it.
   - **B** The fire is small and contained in the area where it started.
   - **C** The fire department has been called.
   - **D** You can fight the fire with your back to an exit.

*Based on "Kitchen Fire Safety Tips" published by NFPA.

⚠ CAUTION

1. For indoor use only.
2. For general ventilating use only. Do not use to exhaust hazardous or explosive materials and vapors.
3. To avoid motor bearing damage and noisy and/or unbalanced impeller, keep drywall spray, construction dust, etc. off power unit.
4. Your hood motor has a thermal overload which will automatically shut off the motor if it becomes overheated. The motor will restart when it cools down. If the motor continues to shut off and restart, have the hood serviced.
5. For best capture of cooking fumes, the bottom of the hood MUST NOT BE LESS than 18" for electric range or 26" for gas range and at a recommended maximum of 30" above the cooking surface.
6. Two installers are recommended because of the size of this hood.
7. To reduce risk of fire and to properly exhaust air, be sure to duct air outside. Do not exhaust air into spaces within walls or ceilings or into attics, crawl spaces, or garages.
8. Be careful when installing the duct and hood, they may have sharp edges.
9. Please read specification label on product for further information and requirements.

INSTALzLER: LEAVE THIS GUIDE WITH THE HOMEOWNER.

HOMEOWNER: OPERATION AND MAINTENANCE INFORMATION ARE ON PAGES 14-15.

⚠ WARNING Cancer and Reproductive Harm - www.P65Warnings.ca.gov

APPEARANCE AND RANGE HOOD DIMENSIONS

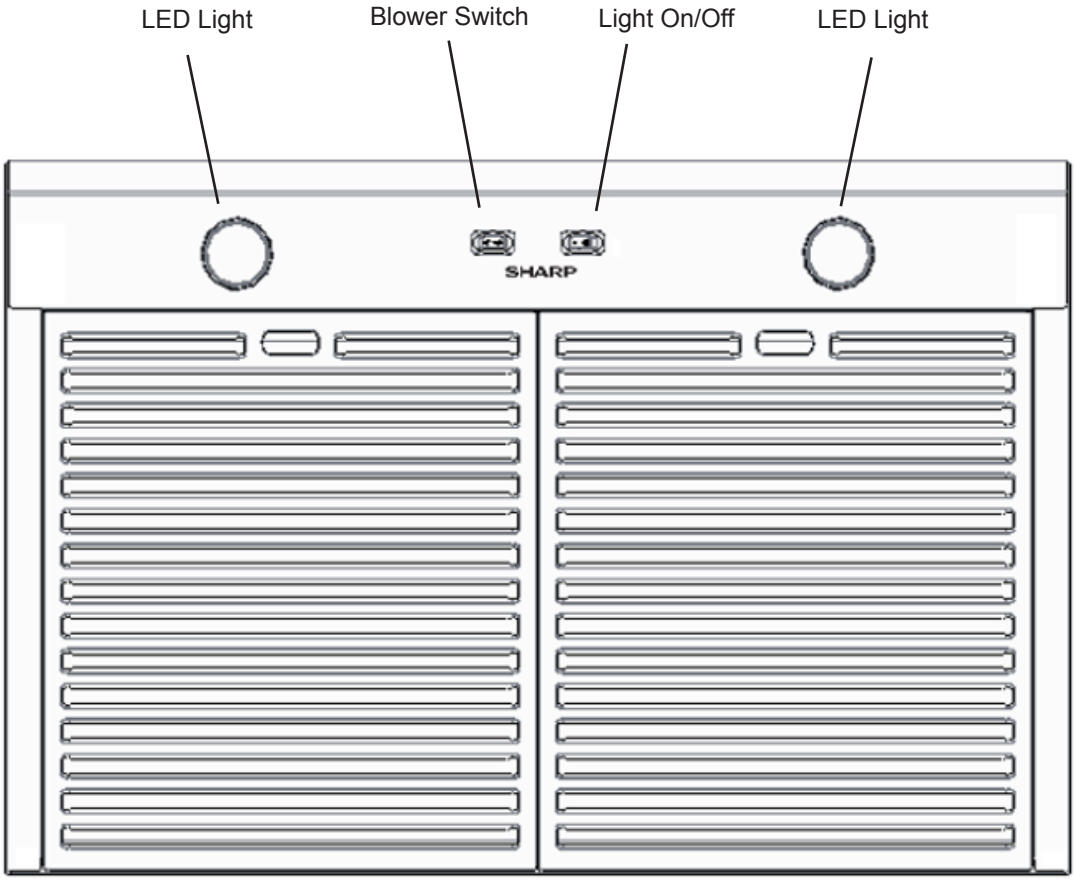

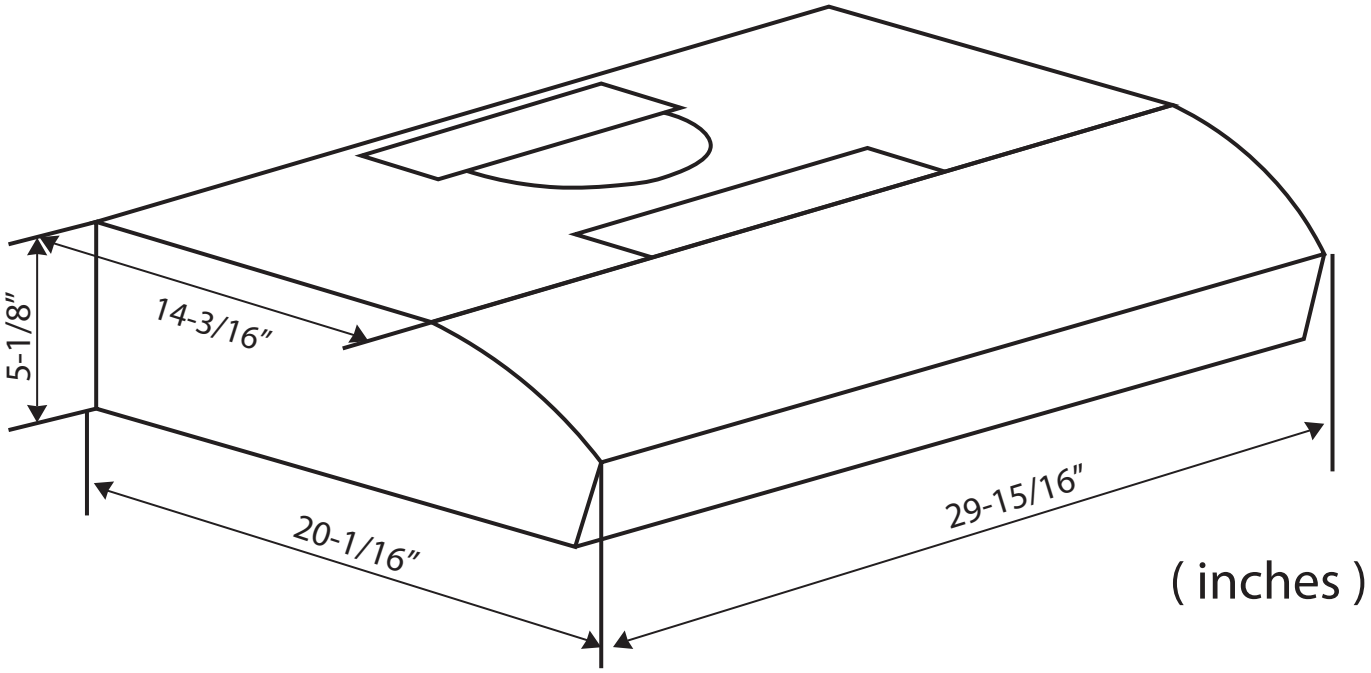

RANGE HOOD MAIN PARTS

CONTENTS

Before proceeding to the installation, check the contents of the box. If items are missing or damaged, contact SHARP Customer Service at 1-800-BE-SHARP. Make sure that the following items are included:

NO.	ITEM	PICTURE	QTY
1	HOOD	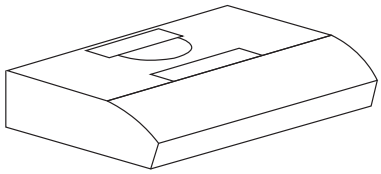	1
2	7” ROUND DUCT	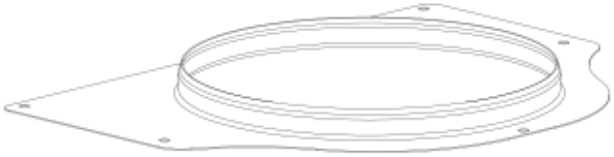	1
3	3¼” X 10” DUCT	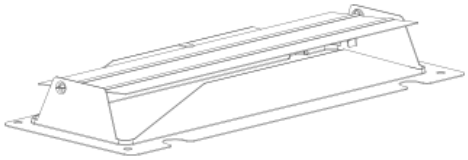	1
4	PARTS BAG		2
5	BAFFLE FILTER	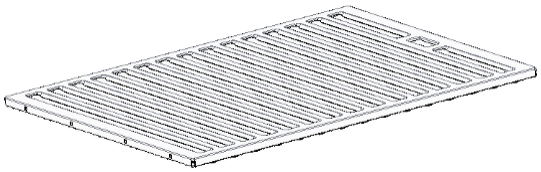	2

NO.	PARTS BAG CONTAINING	PICTURE	QTY
1	Preformed Bracket		2
2	ST4 x 14 (3/16” x 9/16”) Large flat head self-tapping	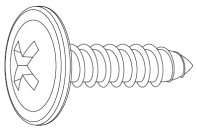	6
3	ST4 x 16 (3/16” x 5/8”) Countersunk self-tapping	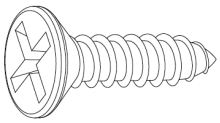	4
4	ST 3/16” x 5/16” screw Large flat head self tapping (burst nozzle)	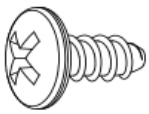	5

ITEM	SHN3033MS
Power Requirements	120 Volts, 0.8 Amps 60Hz
Case Dimensions	—
Width	29-15/16”
Height	5-1/8”
Depth	20-1/16”
LED Lights	2 LED bulbs
Control	Rocker Switch
Max. Blower CFM	350 CFM
Safety Standard	ETL Listed
Net Weight	19.18 lbs

AVAILABLE ACCESSORY PARTS NUMBERS

PART NUMBER	ITEM
SKRH30CFL	Charcoal Filters

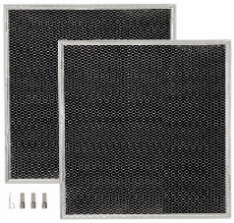

PART NUMBER	ITEM
SKRH07DMP	7” Round Damper

PART NUMBER	ITEM
SKRH36PWC	AC Power Cord

INSTALL DUCTWORK (DUCTED INSTALLATIONS ONLY)

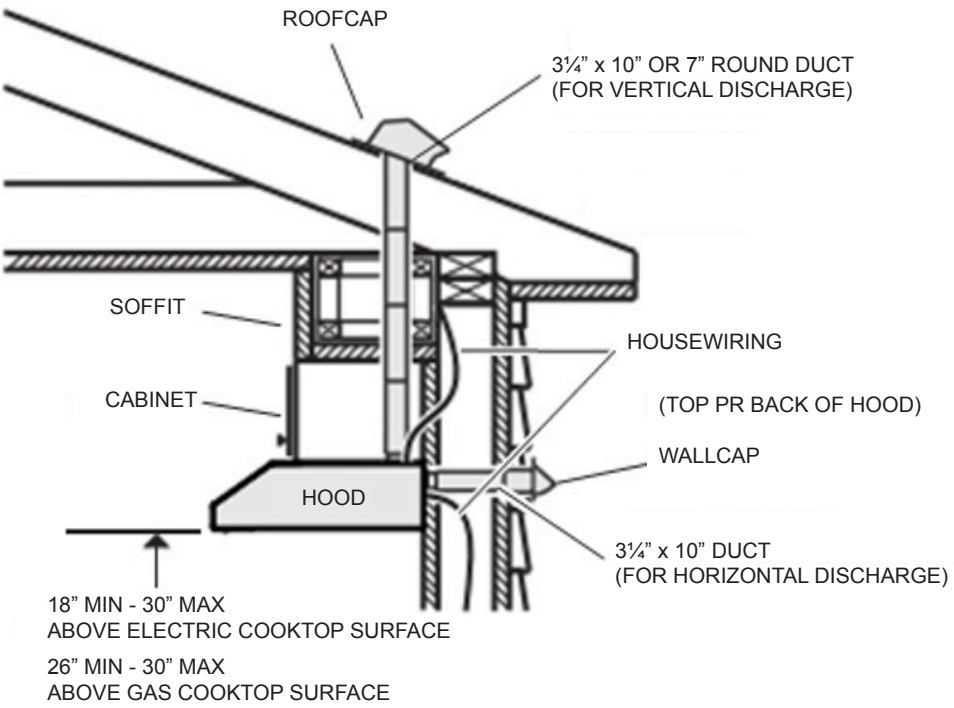

⚠ NOTE

Distances over 30" are at the installer and user discretion.

1. Determine whether hood will discharge vertically (3¼" x 10" or 7" round), or horizontally (3¼" x 10" only).
2. Decide where the ductwork will run between the hood and the outdoors.
3. Choose a straight, short duct run to allow the hood to perform most efficiently. Long duct runs, elbows and transitions will reduce the performance of the hood. Use as few of them as possible. When possible, use at least 2 foot straight runs before any turns. Larger ductwork may be required for best performance with longer duct runs.
4. Install wall cap or roof cap (sold separately); ensure there is no leak in house insulation.
5. Connect metal ductwork to cap and work back towards the hood location. Use 2" metal foil duct tape to seal the joints between ductwork sections.

INSTALLATION INSTRUCTIONS

PREPARE THE HOOD

NOTE: If present, remove all protective polyfilm from the hood and/or parts.

1 Remove the filters by pushing down 1 and tilting filters out 2.

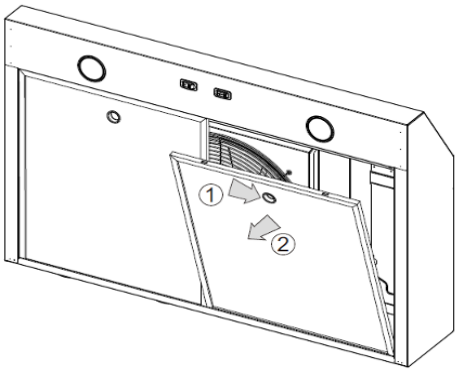

2

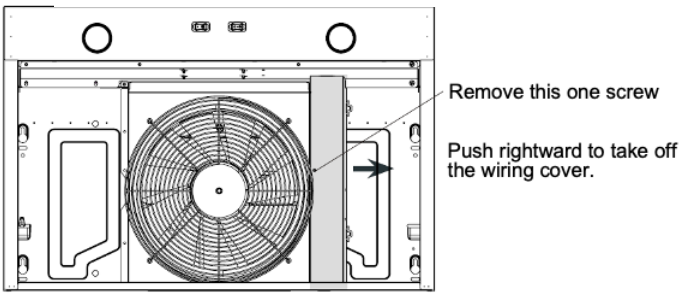

3 Use Philips screwdriver to remove the 3 screws on the 7” round duct. Take off the 7” round duct.

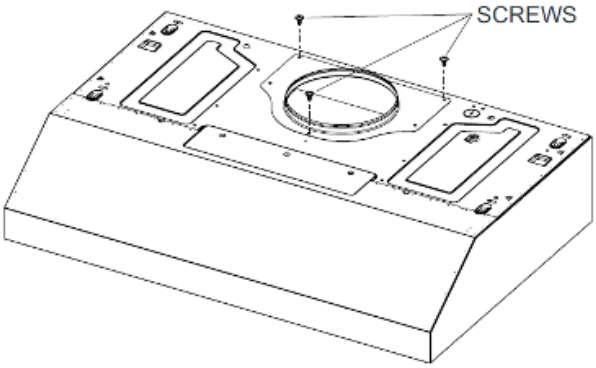

4 Remove Electrical Power Cable Knockout suitable for your installation and install appropriate 1/2” strain relief (not included).

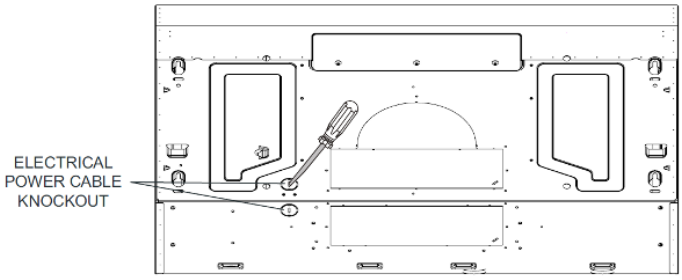

REMOVE KNOCKOUT PLATES

There are three different preparations depending on your installation method.

A. FOR RECIRCULATION INSTALLATION

Remove 3 screws retaining the recirculation cover plate to the hood. This plate is not needed for recirculation. Discard or keep for future use. Peel off and discard the membrane covering the recirculation grille, ensuring the openings are totally cleared.

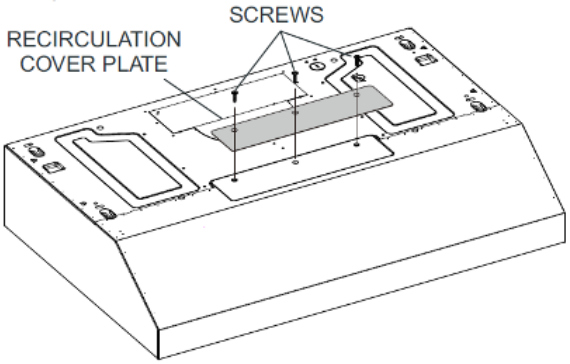

B. FOR DUCTED INSTALLATION - ROUND DUCTING

1 Remove the following knockout plates on the hood. Horizontal knockout plate (3¼” x 10”) on the top AND 7-inch round knockout.

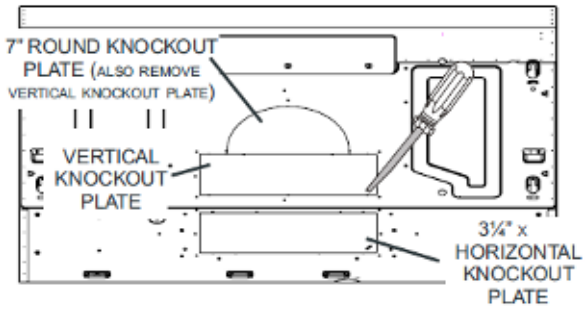

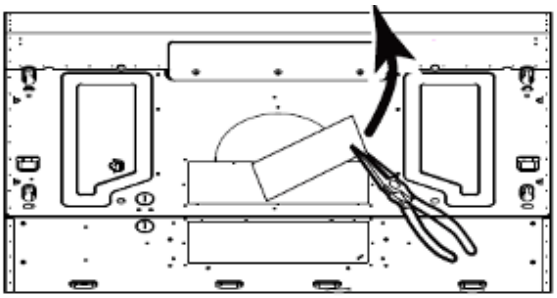

2 Attach 7” Round Duct Plate over the knockout opening with 3/16” x 5/16” screws.

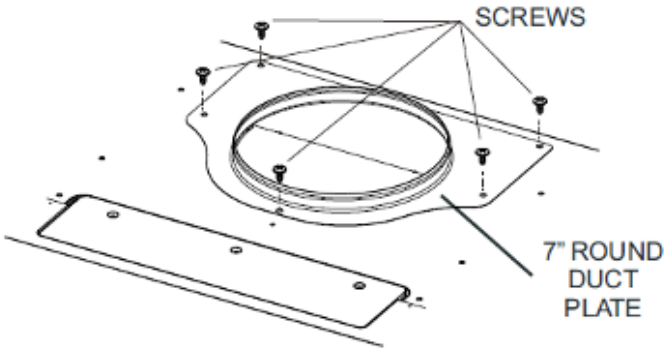

TIP: Insert a small length of 7” round duct and seal the joint using aluminum foil duct tape to ease connection with the house duct work.

C. FOR DUCTED INSTALLATION - RECTANGULAR DUCTING

1 Remove a knockout plate as appropriate for your installation method. Horizontal knockout plate (3¼” x 10”) on the back OR Vertical knockout plate (3¼” x 10”) on the top.

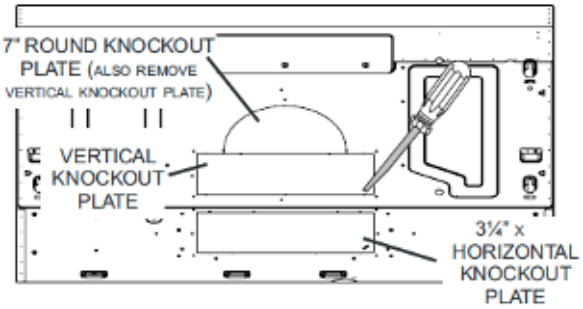

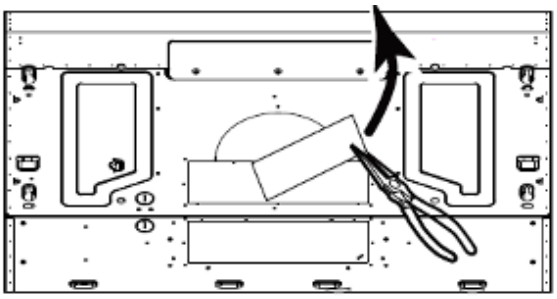

2 Attach a rectangular damper included (3¼” x 10”) over the knockout opening with the 3/16” x 5/16” screws.

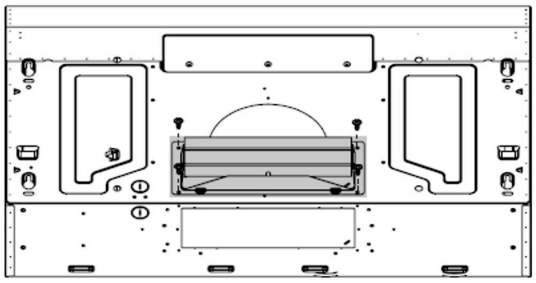

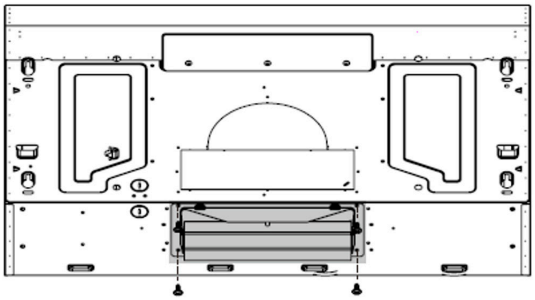

3 When installed, the 3¼” x 10” damper assembly must open as shown below.

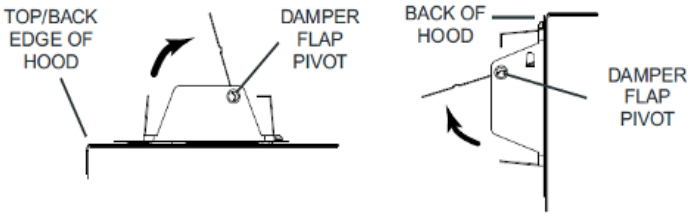

TIP: Insert a small length of duct over the 3¼” x 10” damper assembly and seal the joint using aluminum foil duct tape to ease connection with the house ductwork.

INSTALLATION INSTRUCTIONS

PREPARE THE HOOD LOCATION

This manual covers 2 kinds of installation: the standard (without preformed brackets) and the preformed one-person installation system (using included brackets).

Cut the ducting holes and the hole for the wire to go through inside the cabinet, according to the ducting way you choose.

A. FOR 7” ROUND DUCT

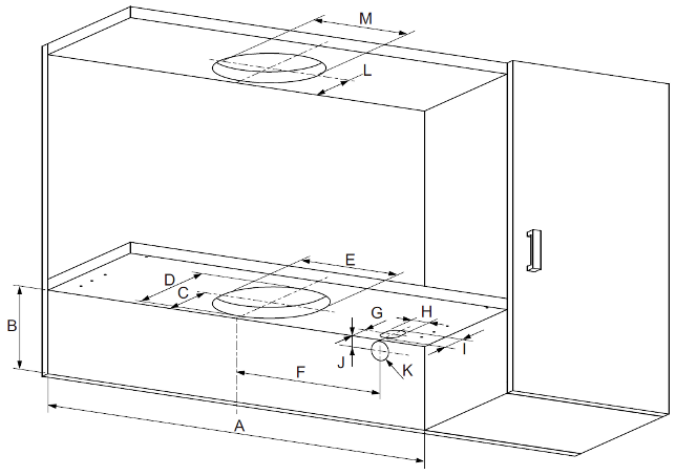

A= 30 1/8” ; B= 5 1/8” ; C=4 7/8” ; D=8 7/16” ; E=φ 7 7/8” ; F=7 5/16” ; G=1 3/4” ; H=φ 1 3/8” ; I=2 3/16”; J=13/16”; K=φ1 3/8”; L=4 9/16”; M=φ 7 7/8”

B. FOR 3¼” x 10” RECTANGULAR DUCT

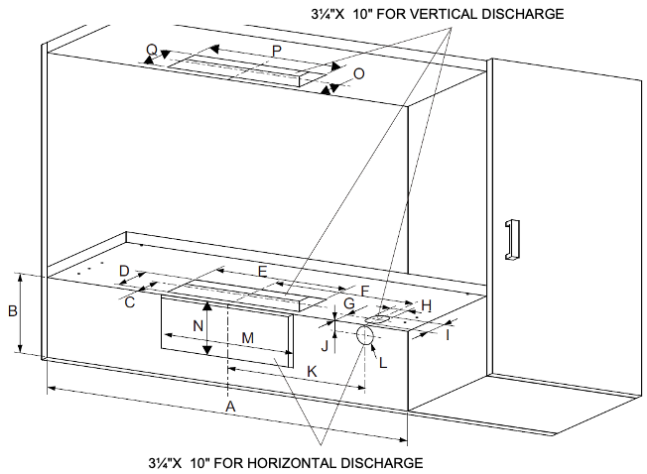

A= 30 1/8” ; B= 5 1/8” ; C=2 15/16” ; D=4 3/4” ; E= 11” ; F=7 5/16” ; G=1 3/4” ; H=φ 1 3/8” ; I=φ 2 3/16” ; J=13/16” ; K=7 5/16” ; L=φ 1 3/8” ; M=11” ; N=4” ; O=2 15/16”; P=11” ; Q=4 3/4”

INSTALL THE HOOD

A. STANDARD INSTALLATION (WITHOUT PREFORMED BRACKETS)

1 Run house power cable between service panel and hood location.

2 Installing 4 pcs ST 3/16” x 9/16" screws (large flat head self tapping) into the cabinet according to the positions on the below drawing.

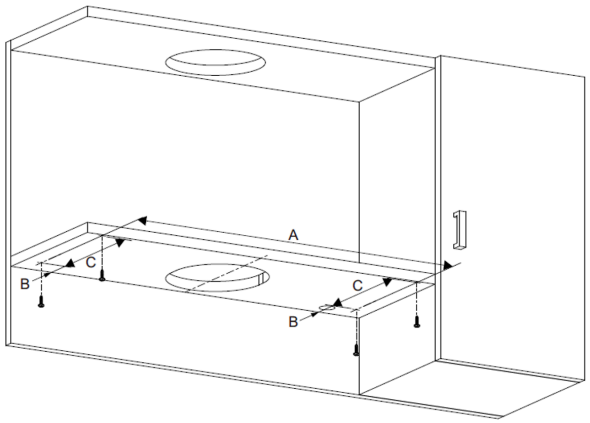

A=27 1/4” ; B=2 1/16” ; C=8 7/8”

NOTICE: Leave 1/8” between the screw head and the cabinet.

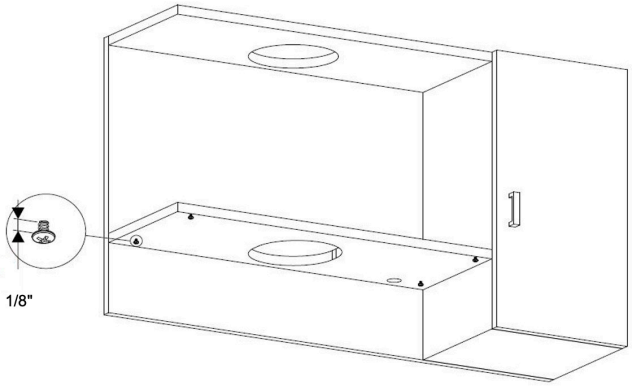

3 Lift the hood. Insert the 4 holes onto the screws. Slide the hood in place.

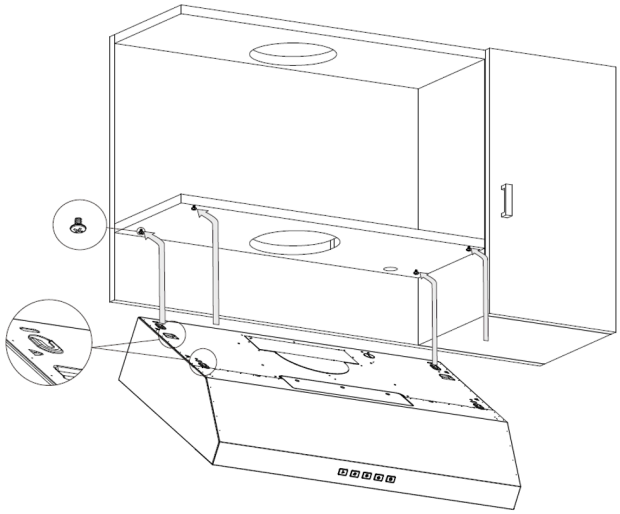

4 While holding the hood, run the house power cable into the hood through the strain relief previously installed.

5 Use 2 pcs 3/16” x 9/16" screws (large flat head self tapping) to fix the hood.

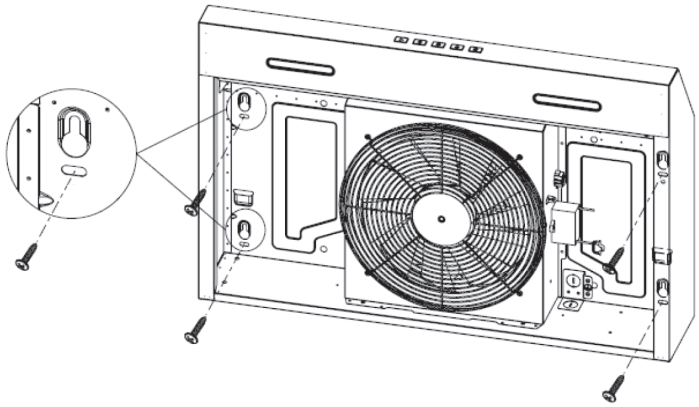

6 Then tighten the other 4 pcs ST 3/16” x 9/16" screws that are installed as step 2.

7 **(FOR DUCTED INSTALLATION ONLY)**
Connect the ductwork to the hood and use metal foil duct tape to make joints secure and air-tight. Make sure the damper assembly (or round duct plate) enters the ductwork and that the damper opens and closes freely.

B. INSTALLATION WITH PREFORMED BRACKETS

1 Run house power cable between service panel and hood location.

2 Use 4 pcs ST 3/16: x 5/8” screws (countersunk self tapping) to fix the 2 pcs preformed brackets onto the cabinet.

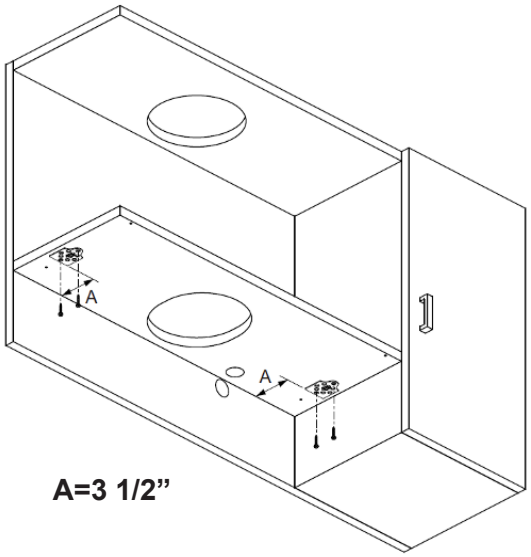

3 Lift the hood. Insert the A B positions of the hood into the preformed bracket.

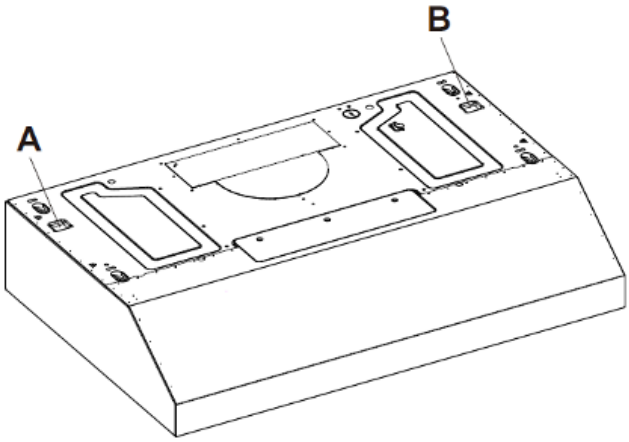

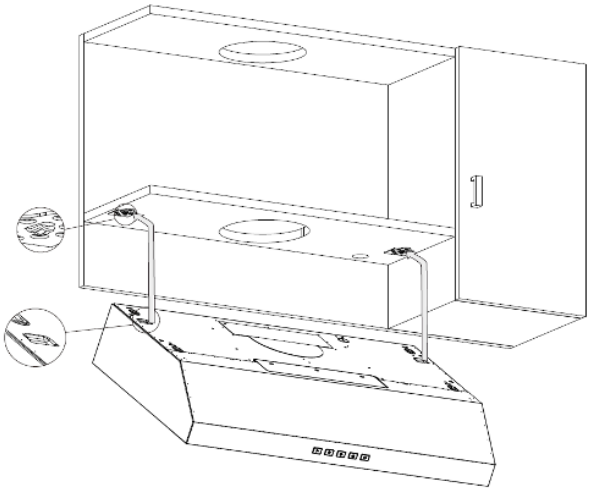

4 **TEMPORARILY** hang the hood by the preformed brackets. While holding the hood, run the house power cable into the hood through the strain relief previously installed.

5 Fasten the hood by installing 4 pcs ST 3/16” x 9/16" screws (large flat head self tapping) into slots.

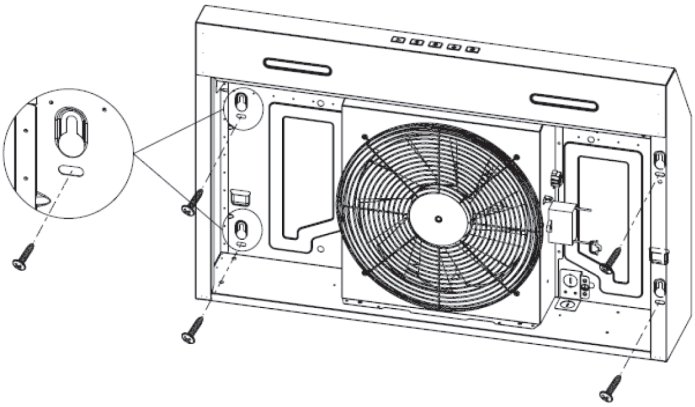

6 **(FOR DUCTED INSTALLATION ONLY)**
Connect the ductwork to the hood and use metal foil duct tape to make joints secure and air-tight. Make sure the damper assembly (or round duct plate) enters the ductwork and that the damper opens and closes freely.

CONNECT THE WIRING

	⚠ WARNING
	Risk of electric shock. Electrical wiring must be done by qualified personnel in accordance with all applicable codes and standards. Before connecting wires, switch power off at service panel and lock service disconnecting means to prevent power from being switched on accidentally.

1 Connect House Power Cable to range hood wiring: BLACK to BLACK, WHITE to WHITE and GREEN or bare wire under GREEN ground screw.

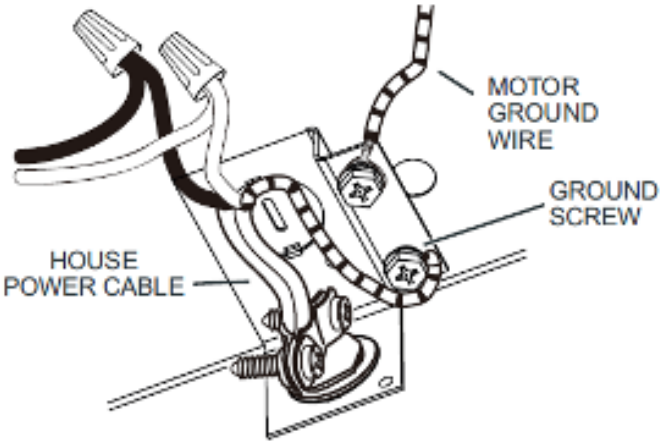

2 Reinstall wiring cover and attach it to the hood using its retaining screw.

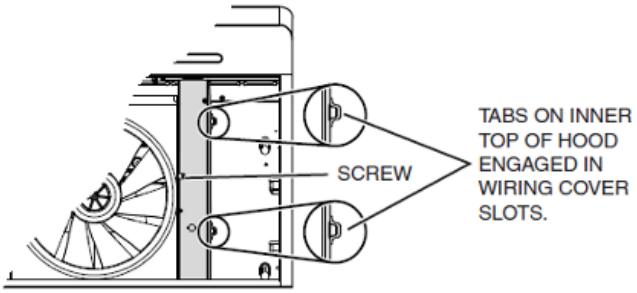

INSTALL THE FILTERS

(FOR DUCTED INSTALLATION ONLY)
Re-install grease filters removed in step 1, under “Prepare the Hood”.

(FOR NON-DUCTED INSTALLATION ONLY)
Purchase two non-ducted filters from your local retailer or call 1-800-BE-SHARP (see product specification label for filter type). Attach the non-ducted filters following instructions packed with the non-ducted filters.

Always turn your hood on before you begin cooking to establish an air flow in the kitchen. Let the blower run for a few minutes to clear the air after you turn off the range. This will help keep the whole kitchen cleaner and fresher.
Operate the hood as follows:

A. BLOWER SWITCH

1. Press to turn on blower at low speed.

2. Press • to turn blower off.

3. Press to turn on blower at high speed.

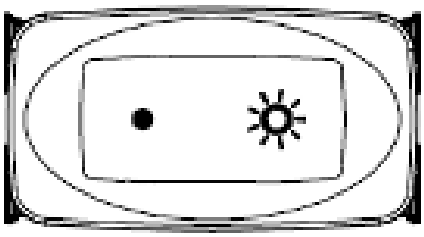

1. Press to turn light on.

2. Press • to turn light off.

CLEANING & MAINTENANCE

Proper maintenance of the Range Hood will assure proper performance of the unit.

MOTOR

The motor is permanently lubricated and never needs oiling. If the motor bearings make excessive or unusual noise, replace the blower with the exact service blower.

CONTROL PANEL SURFACE

The inlay control panel can be cleaned using warm soapy water. Ensure the cloth is clean and well wrung before cleaning. Use a dry soft cloth to remove any excess moisture left after cleaning.

⚠ IMPORTANT

Use mild liquid dish detergents and avoid using harsh cleaning chemicals, strong household detergents or products containing abrasives, as this will affect the appearance of the appliance and potentially remove any printing of artwork on the control panel and may void manufactures warranty.

GREASE FILTERS

Remove grease filters by pulling down on the metal latch tab. This will disengage the filter from the hood. Tilt the filter downward and remove.

The grease filters should be cleaned frequently. Use a warm dishwasher detergent solution. Grease filters are dishwasher safe.

Clean all-metal filters in the dishwasher using a non-phosphate detergent. Discoloration of the filters may occur if using phosphate detergents, or as a result of local water conditions - but this will not affect filter performance. This discoloration is not covered by the warranty. To minimize or prevent discoloration, hand-wash filters using a mild detergent.

NON-DUCTED RECIRCULATION FILTERS

The non-ducted recirculation filters should be changed every 6 months. Replace more often if your cooking style generates extra grease, such as frying and wok cooking. Turn the filter mounting tabs to remove filter and replace.

STAINLESS STEEL CLEANING

DO:

- Regularly wash with clean cloth or rag soaked with warm water and mild soap or liquid dish detergent.
- Always clean in the direction of original polish lines.
- Always rinse well with clear water (2 or 3 times) after cleaning. Wipe dry completely.
- You may also use a specialized household stainless steel cleaner.

DON'T:

- Use any steel or stainless steel wool or any other scrapers to remove stubborn dirt.
- Use any harsh or abrasive cleaners.
- Allow dirt to accumulate.
- Let plaster dust or any other construction residues reach the hood. During construction/renovation, cover the range hood to make sure no dust sticks to the stainless steel surface.

AVOID: WHEN CHOOSING A DETERGENT

- Any cleaners that contain bleach will attack stainless steel.
- Any products containing: chloride, fluoride, iodide, bromide will deteriorate surfaces rapidly.
- Any combustible products used for cleaning such as acetone, alcohol, ether, benzol, etc., are highly explosive and should never be used close to a range.

PAINTED FINISH CLEANING

Clean with warm water and mild detergent only. If discoloration occurs, use a finish polish such as automotive polish. (DO NOT use rough abrasive cleaner or porcelain cleaner.)

FAULT	POSSIBLE CAUSE	SOLUTION
Light on, but motor does not work	• Fan switch turned off	• Select a fan switch position
	• Fan switch failed	• Contact service center
	• Motor failed	• Contact service center
Light on, but motor does not work	• House fuse blown	• Reset/Replace fuses
	• Mains power cable is loose or disconnected	• Refit mains power cable to power outlet • Switch power outlet on
Oil Leakage	• One way valve and the outlet are not tightly sealed	• Take down the one way valve and seal with sealant
	• Oil buildup in the grease filters.	• Clean up the grease filters
Lights not working	• Broken or faulty bulbs	• Replace bulbs as per this instruction
Insufficient suction	• The distance between the range hood and the gas top is too far	• Refit the range hood to the correct distance
The Range hood inclines	• The fixing screw is not tight enough	• Tightening the hanging screw and make it horizontal

⚠ NOTE

Any electrical repairs to this appliance must conform to your local, state and federal laws. Please contact the SHARP Customer Service 1-800-BE-SHARP if there are any questions before undertaking any of the above. Always disconnect the unit from the power source when opening the unit.

SHARP®

SHARP ELECTRONICS CORPORATION • 100 Paragon Drive • Montvale, New Jersey 07645 • USA
800-BE-SHARP (800-237-4277)

August 11, 2026