CBT625/2X/1/UK

Cooker Hood

Instruction Manual

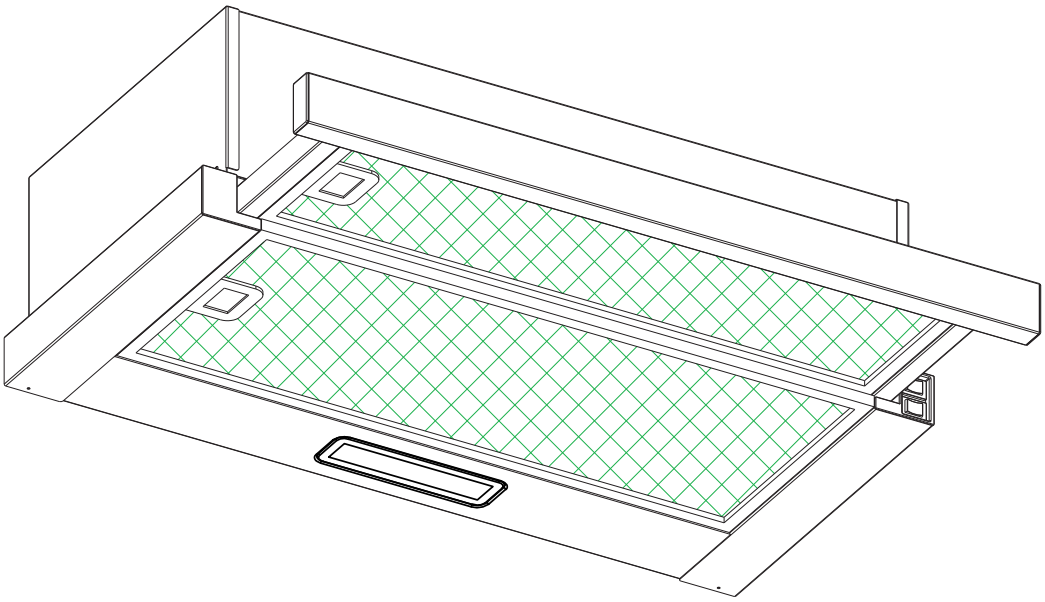

ENGLISH(EN)----------page 001

Cooker Hood
Instruction Manual

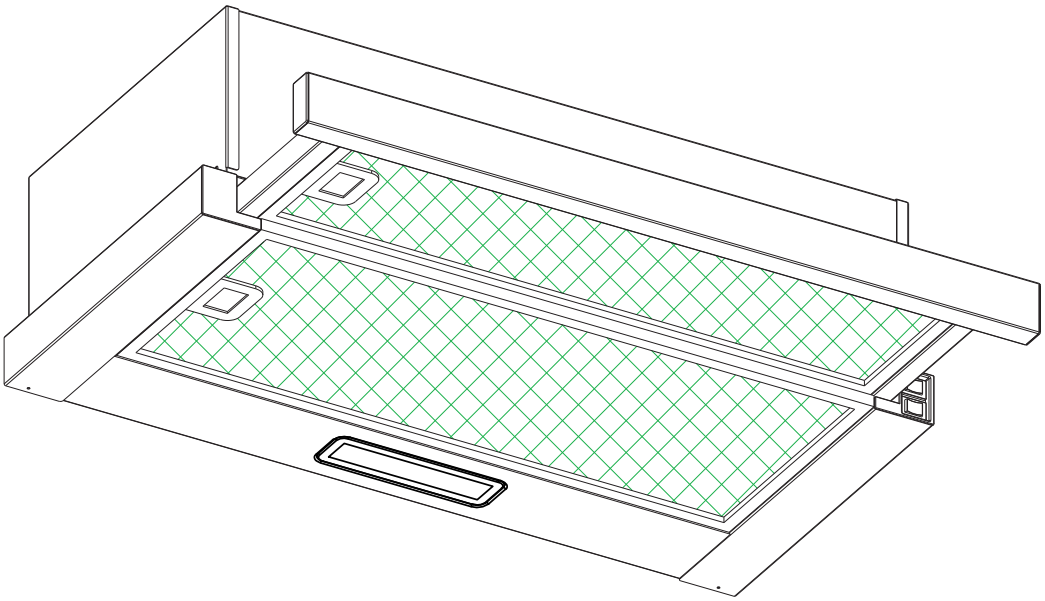

Content

1.....Safety instructions

2.....Installation

3.....Start using your cooker hood

4.....Troubleshooting

5.....Maintenance and cleaning

6.....Environment protection

SAFETY INSTRUCTIONS

This manual explains the proper installation and use of your cooker hood, please read it carefully before using even if you are familiar with the product. The manual should be kept in a safe place for future reference.

Never to do:

- Do not try to use the cooker hood without the grease filters or if the filters are excessively greasy!
- Do not install above a cooker with a high level grill.
- Do not leave frying pans unattended during use because overheated fats or oils might catch fire.
- Never leave naked flames under the cooker hood.

- If the cooker hood is damaged, do not attempt to use.
- Do not flambé under the cooker hood.
- CAUTION: Accessible parts may become hot when used with cooking appliances.
- The minimum distance between the supporting surface for the cooking vessels on the hob and the lowest part of the cooker hood. (When the cooker hood is located above a gas appliance, this distance shall be at least 65 cm)
- The air must not be discharged into a flue that is used for exhausting fumes from appliances burning gas or other fuels.

Always to do:

- Important! Always switch off the electricity supply at the mains during installation and maintenance such as light bulb replacement.
- The cooker hood must be installed in accordance with the installation instructions and all measurements followed.
- All installation work must be carried out by a competent person or qualified electrician.
- Please dispose of the packing material carefully. Children are vulnerable to it.
- Pay attention to the sharp edges inside the cooker hood especially during installation and cleaning.
- When the cooker hood is located above a gas appliance,the minimum distance between the supporting surface for the cooking vessels on the hob and the lowest part of the cooker hood that distance must be:
  Gas cookers: 75 cm
  Electric cookers: 65 cm
  Coal or oil cookers: 75 cm
- Make sure the ducting has no bends sharper than 90 degrees as this will reduce the efficiency of the cooker hood.
- Warning: Failure to install the screws or fixing device in accordance with these instructions may result in electrical hazards

Always to do:

- Always put lids on pots and pans when cooking on a gas cooker.
- When in extraction mode, air in the room is being removed by the cooker hood. Please make sure that proper ventilation measures are being observed. The cooker hood removes odours from room but not steam.
- Cooker hood is for domestic use only.

- If the supply cord is damaged, it must be replaced by the manufacturer, its service agent or similarly qualified persons in order to avoid a hazard.
- This appliance can be used by children aged from 8 years and above and persons with reduced physical, sensory or mental capabilities or lack of experience and knowledge if they have been given supervision or instruction concerning use of the appliance in a safe way and understand the hazards involved. Children shall not play with the appliance. Cleaning and user maintenance shall not be made by children without supervision.

- Warning: Before obtaining access to terminals, all supply circuits must be disconnected.

Always to do:

- Caution: The appliance and its accessible parts can become hot during operation. Be careful to avoid touching the heating elements. Children younger than 8 years old should stay away unless they are under permanent supervision.
- There shall be adequate ventilation of the room when the cooker hood is used at the same time as appliances burning gas or other fuels.
- There is a fire risk if cleaning is not carried out in accordance with the instructions
- Regulations concerning the discharge of air have to be fulfilled.
- Clean your appliance periodically by following the method given in the chapter MAINTENANCE.
- For safety reason, please use only the same size of fixing or mounting screw which are recommended in this instruction manual.
- Regarding the details about the method and frequency of cleaning, please refer to maintenance and cleaning section in the instruction manual.
- Cleaning and user maintenance shall not be made by children without supervision.
- When the cooker hood and appliances supplied with energy other than electricity are simultaneously in operation, the negative pressure in the room must not exceed 4 Pa (4 x 10-5 bar).
- WARNING: Danger of fire: do not store items on the cooking surfaces.
- A steam cleaner is not to be used.
- NEVER try to extinguish a fire with water, but switch off the appliance and then cover flame e.g. with a lid or a fire blanket.

INSTALLATION (VENT OUTSIDE)

MOUNTING OF THE V-FLAP

If the cooker hood does not have an assembled V-flap 1, you should mount the half-parts to its body. The images only show an example of how to mount the V-flap,the outlet may be various according to different models and configuration.
To mount the V-flap 1 you should:
• Mount two half-parts 2 into the body 6
• a pin 3 should be top oriented;
• the axis 4 should be inserted in the holes 5 on body;
• repeat all the operations for the 2nd half-part

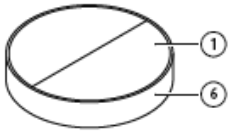

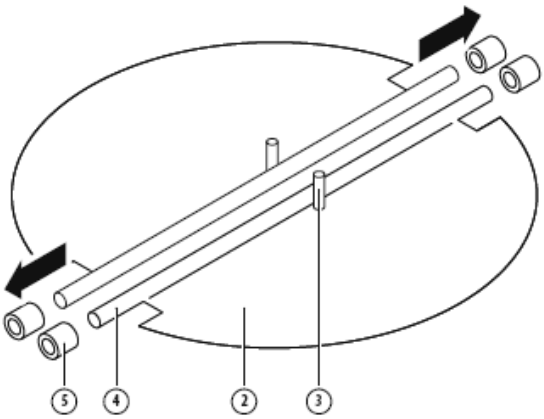

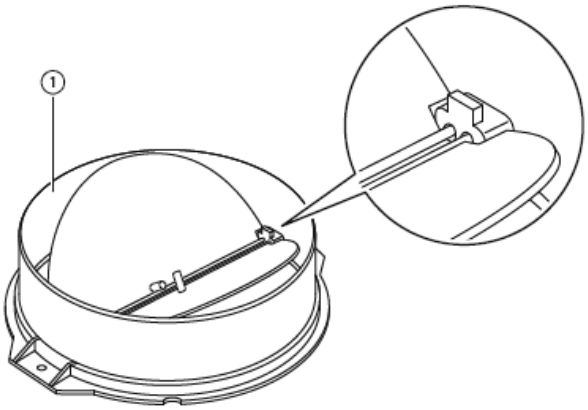

INSTALLATION (Wall Mounting)

1. Decide the location of the holes for fixing the cooker hood.

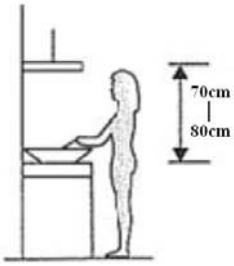

2. Install the L-shaped bracket on the top of the hood by two screws (4mm x 10mm)

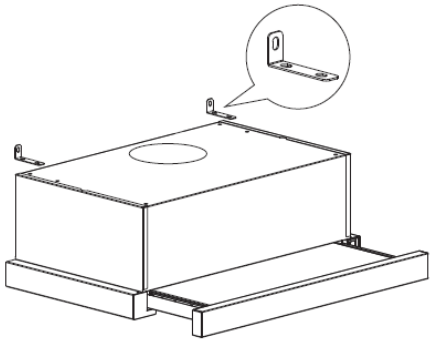

3. The cooker hood is wall mounted by 4 screws (4mm x 30mm) and wall plugs. Mount the cooker hood on the wall on the back of the cooker hood by 2 screws (4mm x 30mm) and wall plugs. Then fix the cooker hood on the wall by 2 screws (4mm x 30mm) and wall plugs through the small L-shaped bracket.

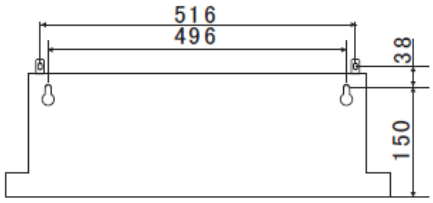

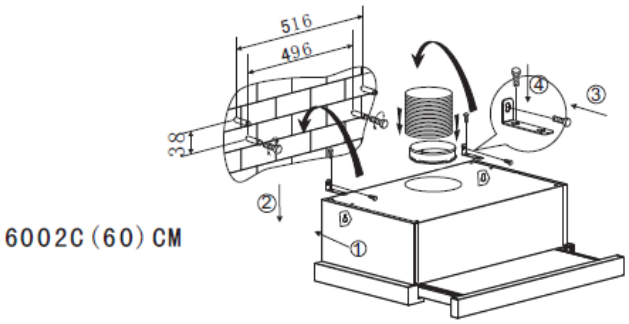

4. Fix the one-way-valve to the air outlet of the cooker hood.

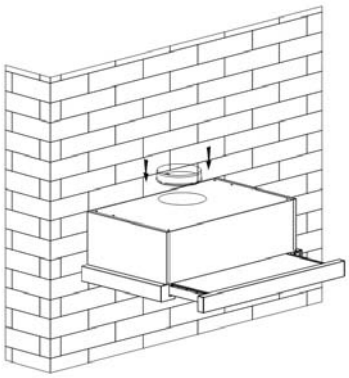

INSTALLATION (Cabinet Mounting)

1. Fix the one-way-valve to the air outlet of the cooker hood.

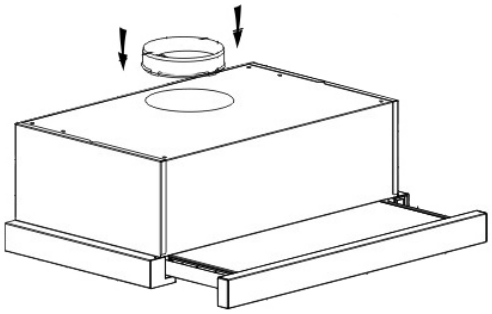

2. Mount the cooker hood on the cabinet by 6 screws (4x35mm) and flat washers.

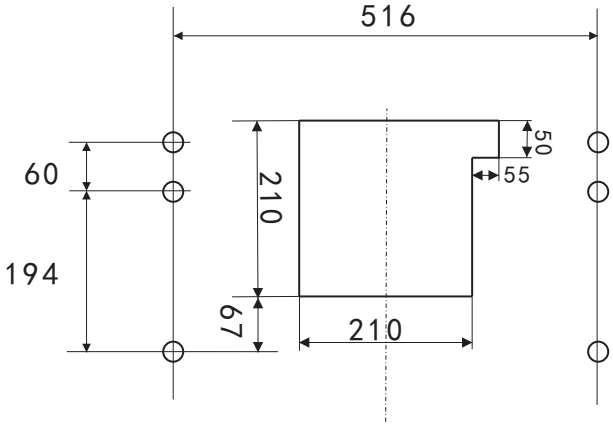

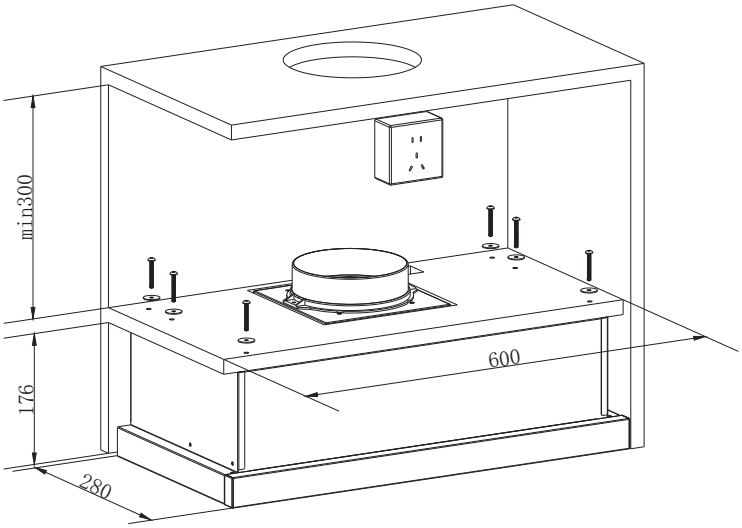
min300
176
600
280

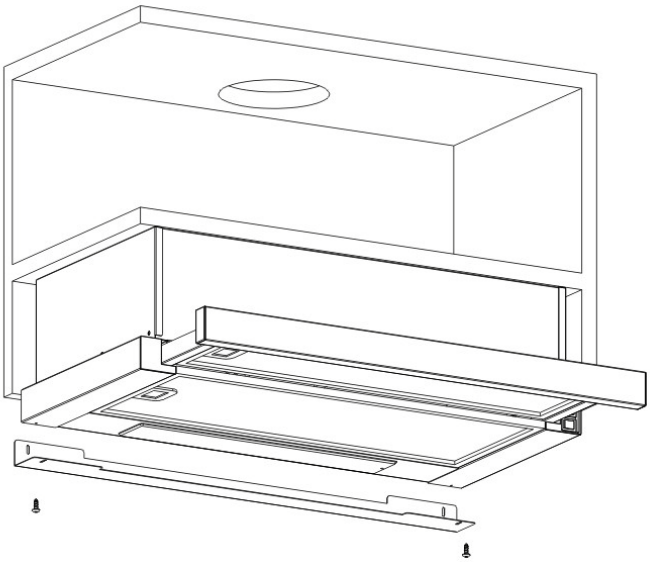

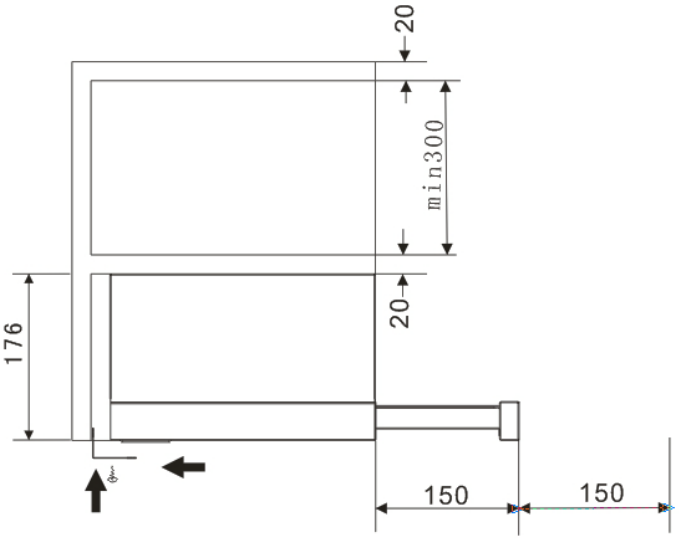
20
min300
20
176
150
150

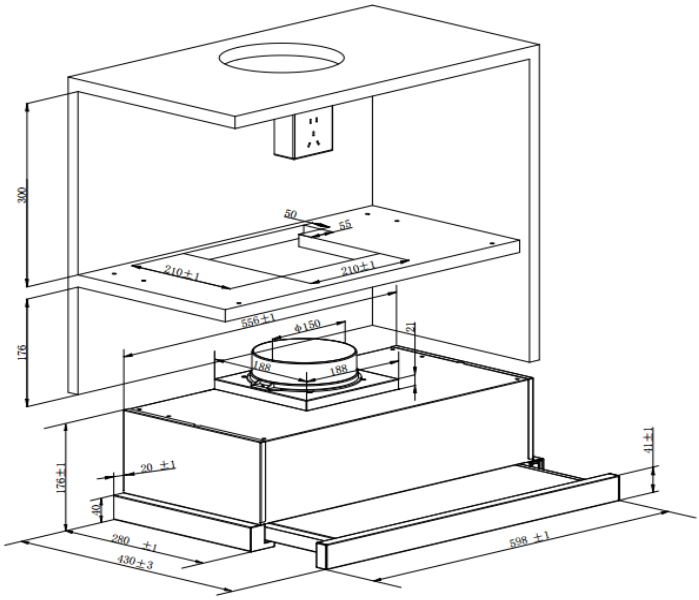

If there is gap between the wall and the cooker hood, you may install the L-shaped bracket on the bottom of the hood by two screws (3 x 12mm).
The installation of the L-shaped bracket is optional.
Note: The expansion pipe is not included in the product.

WARNING:	➢ For safety reason, please use only the same size of fixing or mounting screw which are recommended in this instruction manual. ➢ Failure to install the screws or fixing device in accordance with these instructions may result in electrical hazards.

Start Using Your Cooker Hood

Rocker switch

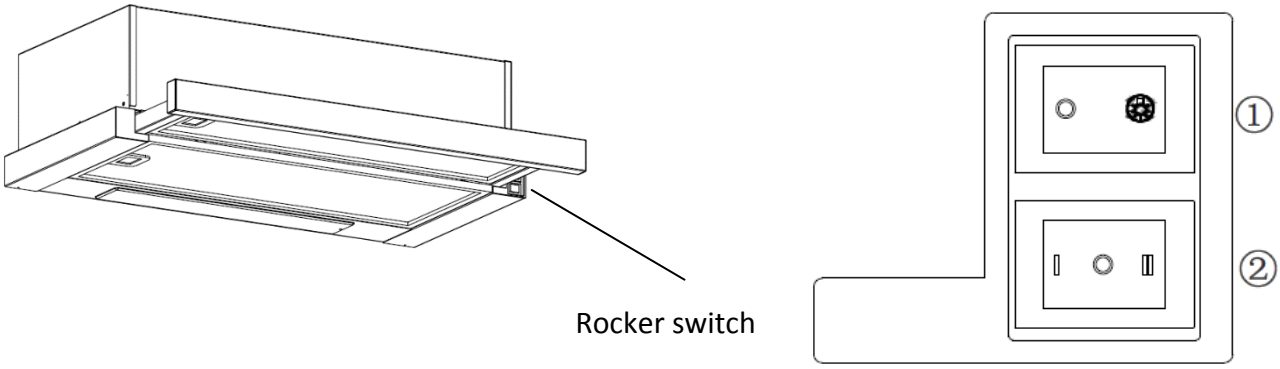

1. Insert the power plug into the socket.
2. Push switch ① to , the lamp will be on; push switch ① to "0" , the lamp will be off.
3. Push the switch ② into "I、II" , the motor will be on "low、high" two speeds, push into "0" , the motor will be off.

4. The power will be connected when pull out the front panel. Conversely, the power will be automatically disconnected.

TROUBLESHOOTING

Fault	Possible Cause	Solution
Light on, but motor does not work	Fan switch turned off	Select a fan switch position.
	Fan switch failed	Contact service center.
	Motor failed	Contact service center.
Light does not work, motor does not work	House fuses blown	Reset/Replace fuses.
	Power cord loose or disconnected	Refit cord to power outlet. Switch power outlet on.
Oil leakage	One way valve and the outlet are not tightly sealed	Take down the one way valve and seal with sealant.
	Leakage from the connection of chimney and cover	Take chimney down and seal.
Lights not working	Broken/Faulty globes	Replace globes as per this instruction.
Insufficient suction	The distance between the cooker hood and the gas top is too far	Refit the cooker hood to the correct distance.
The Cooker hood inclines	The fixing screw not tight enough	Tighten the hanging screw and make it horizontal.

NOTE:
Any electrical repairs to this appliance must conform to your local, state and federal laws.Please contact the service centre if in any doubt before undertaking any of the above.Always disconnect the unit from the power source when opening the unit.

MAINTENANCE AND CLEANING

Caution:

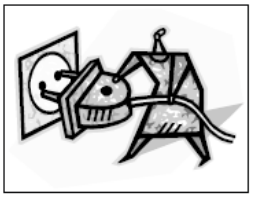

- Before maintenance or cleaning is carried out, the cooker hood should be disconnected from the main power supply. Ensure that the cooker hood is switched off at the wall socket and the plug removed.
- External surfaces are susceptible to scratches and abrasions, so please follow the cleaning instructions to ensure the best possible result is achieved without damage.

GENERAL

Cleaning and maintenance should be carried out with the appliance cold especially when cleaning.Avoid leaving alkaline or acid substances (lemon juice, vinegar etc.) on the surfaces.

STAINLESS STEEL

The stainless steel must be cleaned regularly (e.g.weekly) to ensure long life expectancy.Dry with a clean soft cloth. A specialized stainless steel cleaning fluid may be used.

NOTE:

Ensure that wiping is done along with the grain of the stainless steel to prevent any unsightly crisscross scratching patterns from appearing.

CONTROL PANEL SURFACE

The inlay control panel can be cleaned using warm soapy water. Ensure the cloth is clean and well wrung before cleaning. Use a dry soft cloth to remove any excess moisture left after cleaning.

Important

Using neutral detergents and avoid using harsh cleaning chemicals, strong household detergents or products containing abrasives,as this will affect the appliance appearance and potentially remove any printing of artwork on the control panel and will void manufactures warrantee.

GREASE MESH FILTERS

The mesh filters can be cleaned by hand. Soak them for about 3 minute in water with a grease-loosening detergent then brush it gently with a soft brush. Please do not apply too much pressure, avoid to damage it . (Leave to dry naturally out of direct sun light)

Filters should be washed separately to crockery and kitchen utensils. it is advisable not to use rinse aid.

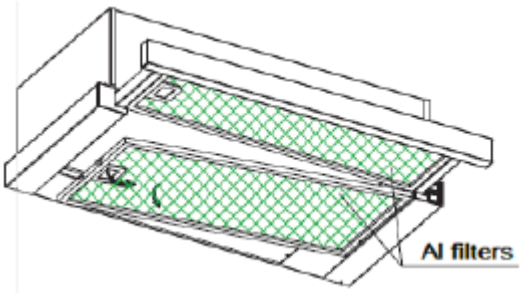

INSTALLING GREASE MESH FILTERS

• To install filters for the following four steps .
- Angle the filter into slots at the back of the hood.
- Push the button on handle of the filter.
- Release the handle once the filter fits into a resting position.
- Repeat to install all filters.

CARBON FILTER- not supplied

Activated carbon filter can be used to trap odors. Normally the activated carbon filter

should be changed at three or six months according to your cooking habit. The installation procedure of activated carbon filter is as below.

(1) Slide the front part of the cooker hood.
(2) The al filter should be detached first. Press the lock and pull it downward.
(3) Take out the carbon filter by rotating the carbon filter anti-clockwise.
(4) Replace the new carbon filter.

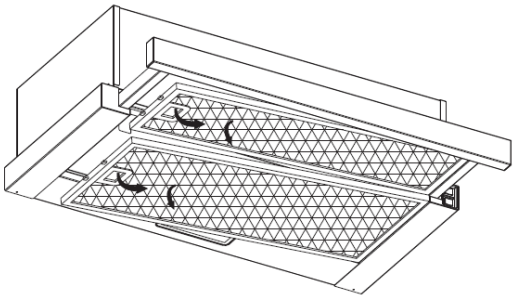

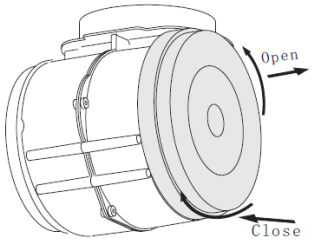

NOTE:

- Make sure the filter is securely locked. Otherwise, it would loosen and cause dangerous.
- When activated carbon filter attached, the suction power will be lowered.

BULB REPLACEMENT

Important :	✧ The bulb must be replaced by the manufacturer, its service agent or similarly qualified persons. ✧ Always switch off the electricity supply before carrying out any operations on the appliance. When handling bulb, make sure it is completely cool down before any direct contact to hands. ✧ When handling globes hold with a cloth or gloves to ensure perspiration does not come in contact with the globe as this can reduce the life of the globe.

(1) Switch off the appliance and unplug it.
(2) Slide the front part of the cooker hood.
(3) The al filter should be detached first. Press the lock and pull it downward.
(4) Replace with same type of light.110-240V~50Hz, MAX.2W LED

• ILCOS D code for this lamp is: DBS-2/65-H-120/33.
– Max wattage: 1 X 2 W
– Voltage range: AC 110-240 V
– Dimensions:

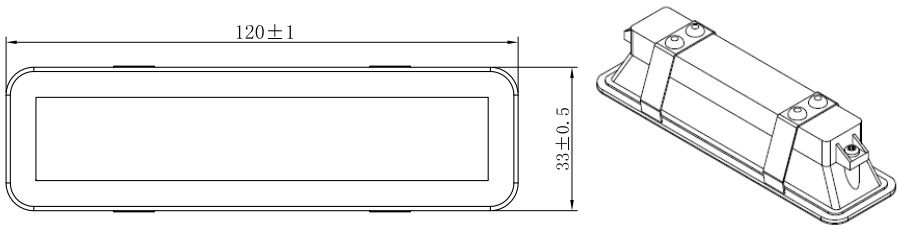

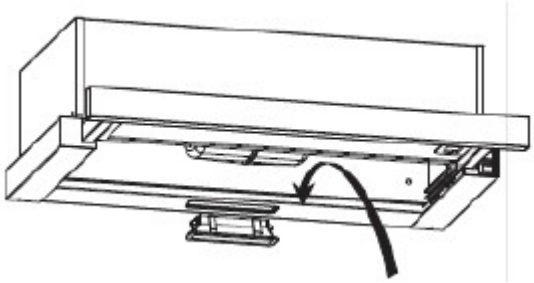

ENVIRONMENTAL PROTECTION:

This appliance is labelled in accordance with European Directive 2012/19/EU regarding electric and electronic appliances (WEEE). The WEEE contain both polluting substances (that can have a negative effect on the environment) and base elements (that can be reused). It is important that the WEEE undergo specific treatments to correctly remove and dispose of the pollutants and recover all the materials. Individuals can play an important role in ensuring that the WEEE do not become an environmental problem; It is essential to follow a few basic rules:

- the WEEE should not be treated as domestic waste;
- the WEEE should be taken to dedicated collection areas managed by the town council or a registered company.

In many countries, domestic collections may be available for large WEEEs. When you buy a new appliance, the old one can be returned to the vendor who must accept it free of charge as a one-off, as long as the appliance is of an equivalent type and has the same functions as the purchased appliance.

NOTE:

The following shows how to reduce total environmental impact (e.g. energy use) of the cooking process).

(1) Install the cooker hood in a proper place where there is efficient ventilation.
(2) Clean the cooker hood regularly so as not to block the airway.
(3) Remember to switch off the cooker hood light after cooking.
(4) Remember to switch off the cooker hood after cooking.

INFORMATION FOR DISMANTLING

Do not dismantle the appliance in a way which is not shown in the user manual. The appliance could not be dismantled by user. At the end of life, the appliance should not be disposed of with household waste. Check with you Local Authority or retainer for recycling advice.