P-Trap Installation:

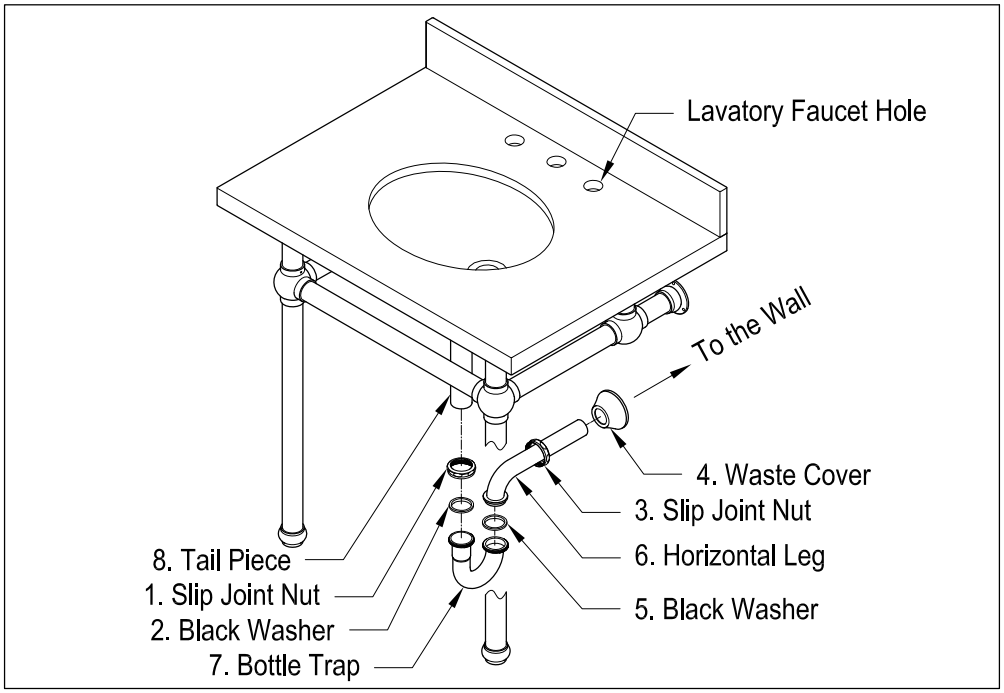

1. Remove horizontal leg and slip joint nut from bottle trap.
2. Apply Teflon tape to all exposed threads.
3. Insert slip joint nut (3) and waste cover (4) onto horizontal leg (6).
4. Insert horizontal leg into wall waste opening, do not tighten.
5. Insert black washer (2) and slip joint nut (1)onto tail piece (8).
6. Attach bottle trap (7) to tail piece and hand tighten slip joint nut (1).
7. Align bottle trap with horizontal leg and tail piece, at this point it may be necessary to cut part of tail piece or part of horizontal leg to obtain proper alignment.
8. After all components have been properly aligned, insert horizontal leg making sure to insert black washer (5) before tightening slip joint nut (3).
9. Thread both slip joint nuts onto bottle trap and tighten along with slip joint securing horizontal leg to wall waste opening.
10. Check for leakage by opening faucet and letting water run for at least 45 seconds.

Care and maintenance:

- Clean only with warm water and dry with a microfiber cloth.
- Do not use any soaps, abrasives or brass cleaners as these may damage the finish.
- Dry after every use if there is moisture present.
- You may apply a light coat of non-abrasive carnauba wax periodically.

FAUCETURE

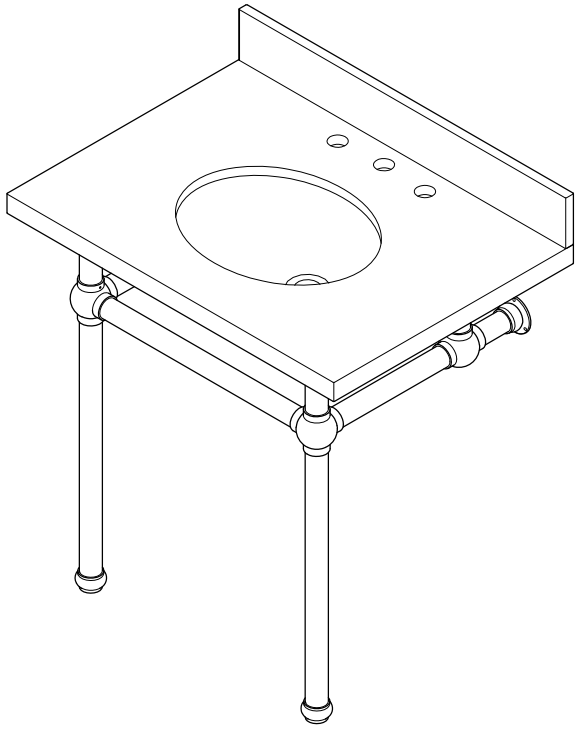

Parts:

Flange	Side bar	Support bar	Support bar	3-Way Ball Joint	4-Way Ball Joint
A	B	C	D	E	F
6 Pcs	2 Pcs	2 Pcs	2 Pcs	2 Pcs	2 Pcs
Front Bar	**Floor Flange**	**Floor Screw**	**Mounting Screw**	**Frame**	
G	H	I	J	K	
1 Pc	2 Pcs	2 Pcs	6 Pcs	1 Pc	

⚠CAUTION

Failure to follow all installation directions may cause product to detach from the wall and cause serious injury

www.kingstonbrass.com
TOLL-FREE CUSTOMER SERVICE: 1-877-2-KBRASS
TECHNICAL SUPPORT E-mail: service@kingstonbrass.com
12775 Reservoir Street, Chino, CA 91710

FAUCETURE
INSTALLATION INSTRUCTIONS
Console Sink Legs

Before Installation :

1. Unpack your new Kingston Brass product and inspect it keep the product in its original package until you are ready to install it.
2. Shut the water supply off when replacing an existing fixture. Preparation of the floors and walls, including all additional wall supports, maybe required.
3. Observe all local plumbing and building codes.
4. It is recommended that you enlist the assistance of a second person to install this unit.
5. Make sure to select appropriate drain as some of Kingston Brass vessel sinks do not include overflow hole.
6. The weight capacity of this unit is solely dependent on its installation.
   a) Once the location has been selected, make sure to install 2" x 6" lumber or larger wood bracing, in order to secure the console properly.
   b) For maximum weight capacity we recommend that you use our bracket # VSPLBRKT, bracket should be attached to 2" x 6" lumber or larger wood bracing for added safety.

Assembly and Installation :

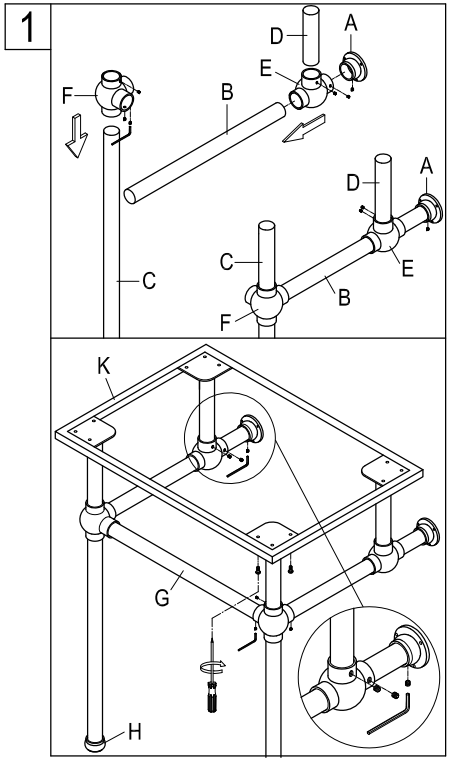

1. Start by assembling right and left support legs as shown on figure 1, If necessary refer to the parts breakdown chart included in these installation instructions, after assembling right & left sides of the support legs, attach front bar (G) to both sides, make sure to tighten all set screws on the leg support assembly. Attach the top flanges (A) to all 4 vertical posts, tighten set screws and attach top frame (K).

Need Tools:

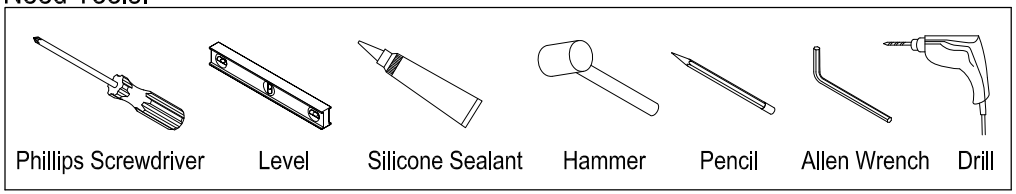

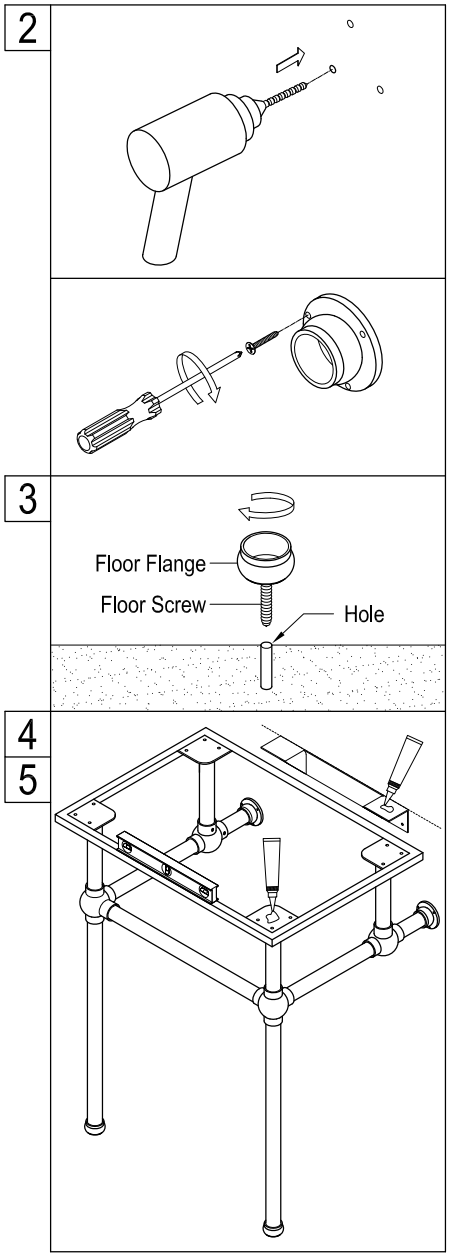

2. With the help of a second person position the leg support assembly at the desired location, make sure to level and plumb the leg support assembly, mark the location of the holes on the wall support flanges as well as the perimeter of the location where the legs will be secured to the floor, locate the center of the perimeter and drill 5/16" holes.

3. Reposition the assembled console base and secure to the wall, if you are unable to secure to wood bracing as specified, consult your contractor to specify the appropriate anchors needed for your application, add construction adhesive to the 2 holes on the floor, thread the floor flange and insert the legs into both floor flanges.

4. If you are using a VSPLBRKT wall bracket, using a level, mark a horizontal line at the height of the top of the frame of the leg support assembly and attach the bracket to the wood bracing at the line previously marked.
5. Apply silicone adhesive to the top of the console leg support assembly as well as to the top of the wall bracket. As well as to the back of the console top, place the top on top on the console leg assembly, wipe off any excess adhesive and let the adhesive cure as per the manufacturer's recommendation.

©2022-11-D Kingston Brass

FAUCETURE

INSTALLATION INSTRUCTIONS
Console Sink

Granite/Marble Care & Maintenance

Your new granite/marble vessel top has been factory sealed and polished to a smooth glass finish.In order to maintain the surface and keep it looking fresh and natural, we recommend the following procedures:

1. All stone products require a resealing at least once a year. Since your top has already been sealed at the factory. You will need to schedule your top for resealing accordingly.
2. Before applying the sealer, the exposed areas should be completely clean and dry.
3. For routine maintenance and cleaning, we recommend Stone Care's "Clean Encounters." The cleaner should be used weekly and more frequently with heavier than usual use or for cleaning of chemicals, such as those commonly found in the bathroom. Be sure to follow the instructions on the container.
4. To keep your granite/marble vessel top hygienically clean, we recommend Stone Care's "Counterriffic" on a weekly basis. This spray disinfectant will kill all types of bacteria and is FDA and EPA approved for food handling surfaces.
5. Liquid spills, such as alcohol, medications, etch should be cleaned up promptly. Some liquids with high-acid content can etch granite/marble surfaces if left for any length of time. Popular products that should be promptly cleaned up are: shaving cream, toothpaste, perfume, cologne, nail polish remover, hair coloring and perm products, shampoo, drain opener, and toilet bowl cleaner.
6. Place protective pads on the bottoms of any heavy objects, such as pottery, appliances, or other objects that may scratch the granite/marble surface.
7. Avoid abrasive cleaners or rough cleaning pads. If necessary, a soft buffing pad can be used.
8. Use coasters under drinking glasses to prevent glass rings on the surface.
9. Do not stand on the granite/marble top to fix overhead lights or other items

Need Tools:

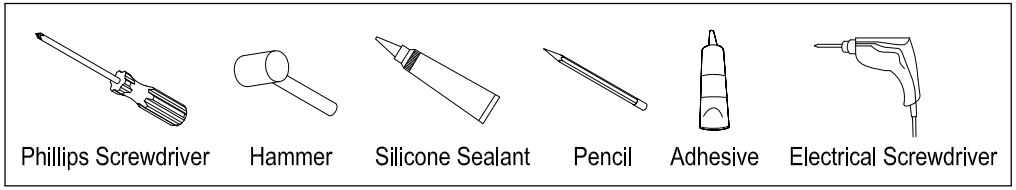

Installation Step :

1
2

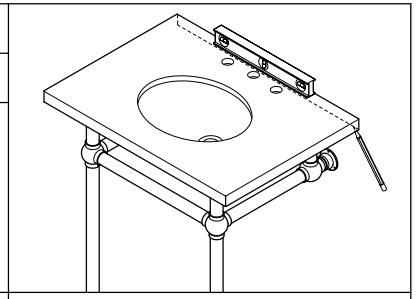

3
4

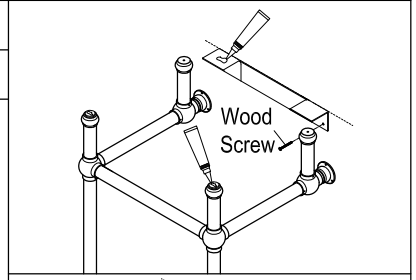

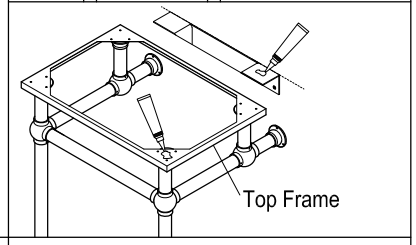

5
6

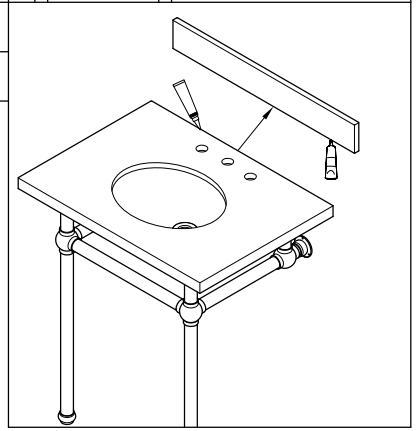

1. With the help of a second person gently place basin on top of pedestal and level.
2. Mark the location of the mounting bracket holes.
3. Remove basin, drive in and tighten up the wood screws at the marked locations to secure the bracket and the pedestal onto the wall.
4. Apply silicone sealant on the top surface of bracket and the tops of the vertical legs.
5. Place your granite/marble top on the vertical legs and the top of bracket, make sure its back edge is completely against wall.
   Apply silicone sealer along the back edge of granite/marble top.
6. If you plan to use the provided backsplash, apply a construction adhesive to the bottom and back of the backsplash and push firmly against the wall. Make sure that the wall is clean, dry, smooth, and free of any loose paint or wallpaper before installing backsplashes.

CAUTION!!!!:

Please make sure the faucet you have selected will not interfere with the backsplash. In some installations, the base of your faucet might be too large in diameter to allow for back splash installation.

© 2022-12-D Kingston Brass