FRIGIDAIRE

frigidaire.com/register

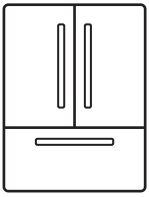

EN User Manual | **Fridge Freezer**

Welcome to our family

Thank you for bringing Frigidaire into your home! We see your purchase as the beginning of a long relationship together.

This manual is your resource for the use and care of your product. Please read it before using your appliance. Keep it handy for quick reference. If something doesn't seem right, the troubleshooting section will help you with common issues.

FAQ, helpful tips and videos, cleaning products, and kitchen and home accessories are available at **http://www.frigidaire.com**.

We are here for you! Visit our website, chat with an agent, or call us if you need help. We may be able to help you avoid a service visit. If you do need service, we can get that started for you.

Let's make it official! Be sure to register your product.

CONTENTS

1. IMPORTANT SAFETY INFORMATION..... 2
2. FEATURES..... 5
3. INSTALLATION.....6
4. DOOR REMOVAL.....9
5. DOOR HANDLE INSTALLATION..... 12
6. WATER SUPPLY CONNECTION..... 12
7. CONTROLS AND SETTINGS: EXTERNAL WATER DISPENSER..... 14
8. CONTROLS AND SETTINGS: INTERNAL WATER DISPENSER..... 17
9. AUTOMATIC ICE AND WATER DISPENSER.....18
10. ICE MAKER.....21
11. STORAGE FEATURES.....21
12. STORING FOOD AND SAVING ENERGY..... 23
13. NORMAL OPERATING SOUNDS..... 24
14. FILTER REPLACEMENT.....25
15. CARE AND CLEANING..... 28
16. TROUBLESHOOTING..... 30
17. LIMITED WARRANTY.....35
18. QUEBEC RIGHT TO REPAIR.....36

1. IMPORTANT SAFETY INFORMATION

1.1 Keep a record for quick reference

Model number

.....

Serial number

.....

Purchase date

.....

1.2 Serial number location

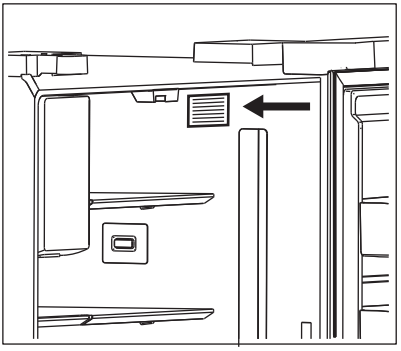

⚠ WARNING!

You must follow these guidelines to ensure that your refrigerator's safety mechanisms are operating correctly.

1.3 Safety definitions

⚠

This is the safety alert symbol. It is used to alert of potential personal injury hazards. Obey all safety messages that follow this symbol to avoid possible injury or death.

⚠ DANGER

DANGER indicates an imminently hazardous situation which, if not avoided, will result in death or serious injury.

⚠ WARNING!

WARNING indicates a potentially hazardous situation which, if not avoided, could result in death or serious injury.

⚠ CAUTION!

CAUTION indicates a potentially hazardous situation which, if not avoided, may result in minor or moderate injury.

➡ IMPORTANT

IMPORTANT indicates installation, operation or maintenance information which is important but not hazard-related.

⚠ DANGER

DANGER Risk of fire or explosion. Flammable refrigerant used. Do not use mechanical devices to defrost refrigerator. Do not puncture refrigerant tubing.
DANGER Risk of fire or explosion. Flammable refrigerant used. To be repaired only by trained service personnel. Use only manufacturer-authorized service parts. Any repair equipment used must be designed for flammable refrigerants. Follow all manufacturer repair instructions. Do not puncture refrigerant tubing.

⚠ CAUTION!

CAUTION Risk of fire or explosion. Dispose of refrigerator properly in accordance with the applicable federal or local regulations. Flammable refrigerant used.
CAUTION Risk of fire or explosion due to puncture of refrigerant tubing. Follow handling instructions carefully. Flammable refrigerant used.

⚠ WARNING!

CALIFORNIA RESIDENTS ONLY WARNING! Cancer and Reproductive Harm http://www.P65Warnings.ca.gov

1.4 Child safety

This appliance is not intended for use by persons (including children) with reduced physical, sensory or mental capabilities, or lack of experience and knowledge, unless

they have been given supervision or instruction concerning use of the appliance by a person responsible for their safety.
Destroy or recycle the carton, plastic bags, and any exterior wrapping material immediately after the refrigerator is unpacked.
Children should never use these items to play. Cartons covered with rugs, bedspreads, plastic sheets or stretch wrap may become airtight chambers, and can quickly cause suffocation.

1.5 Important safety instructions

Do not store or use gasoline or other flammable vapors and liquids in the vicinity of this or any other appliance.
Do not store explosive substances such as aerosol cans with a flammable propellant in this appliance.
Do not operate the refrigerator in the presence of explosive fumes
Avoid contact with any moving parts of automatic ice maker.
Remove all staples from the carton. Staples can cause severe cuts, and also destroy finishes if they come in contact with other appliances or furniture.

⚠ WARNING!

Do not use electrical appliances inside the food storage compartments of the appliance unless they are of the type recommended by the manufacturer.

1.6 Proper disposal of your refrigerator or freezer

Risk of child entrapment
Child entrapment and suffocation are not problems of the past. Junked or abandoned refrigerators or freezers are still dangerous – even if they will sit for “just a few days”. If you are getting rid of your old refrigerator or freezer, follow the instructions below to help prevent accidents.
We strongly encourage responsible appliance recycling/disposal methods. Check with your utility company or visit http://www.energystar.gov/recycle for more information on recycling your old refrigerator.
Before you throw away your old refrigerator/freezer:

- Remove doors.
- Leave shelves in place so children may not easily climb inside.
- Have it removed by a qualified service technician.

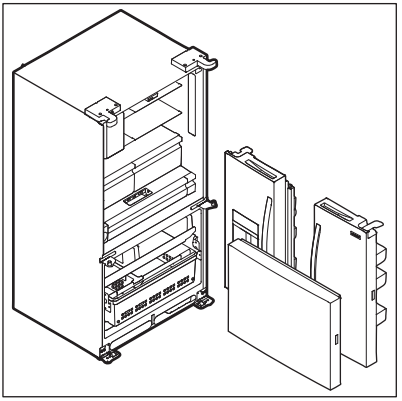

1.7 Electrical information

- The appliance must be plugged into its own dedicated 115 Volt, 60 Hz., 15

Amp, AC only electrical outlet. The power cord of the appliance is equipped with a three-prong grounding plug for your protection against electrical shock hazards. It must be plugged directly into a properly grounded three-prong receptacle. The receptacle must be installed in accordance with local codes and ordinances. Consult a qualified electrician. Do not use an extension cord or adapter plug.

⚠ WARNING!

Avoid fire hazard or electric shock.

- If the power cord is damaged, it should be replaced by an authorized service technician to prevent any risk.
- Never unplug the appliance by pulling on the power cord. Always grip the plug firmly, and pull straight out from the receptacle to prevent damaging the power cord.
- Unplug the appliance before cleaning and before replacing the light bulb to avoid electrical shock.
- Performance may be affected if the voltage varies by 10% or more. Operating the appliance with insufficient power can damage the compressor. Such damage is not covered under your warranty.
- Do not plug the unit into an electrical outlet controlled by a wall switch or pull cord to prevent the appliance from being turned off accidentally.
- Do not pinch, knot, or bend the power cord in any manner.

⚠ WARNING!

When positioning the appliance, ensure the supply cord is not trapped or damaged.
Do not locate multiple portable socket-outlets or portable power supplies at the rear of the appliance.

⚠ WARNING!

Do not, under any circumstances, cut, remove, or bypass the grounding prong (A). Always use the power cord with a three-prong grounded plug and grounding type wall receptacle.

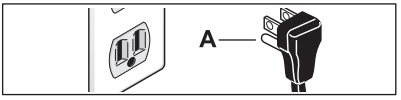

2. FEATURES

➔ IMPORTANT

Features may vary by model.
Accessories are available for your appliance and may be purchased at Frigidaire.com or by calling toll-free 1-800-374-4432.

2.1 External Water Dispenser Model

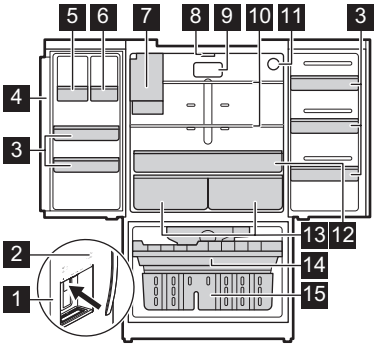

1 Ice/Water Dispenser
2 External Appliance Control Display
3 Condiment Bin
4 Flipper Mullion
5 Dairy Bin
6 Small Bin
7 Ice Maker Bin
8 Flipper Guide
9 Air Filter
10 Glass Shelf
11 Water Filter
12 Deli Drawer
13 Crispers
14 Upper Freezer Baskets
15 Lower Freezer Baskets

2.2 Internal/Non-Dispenser Model

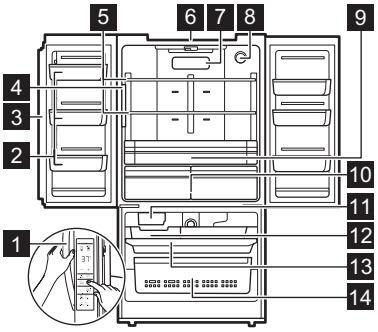

1 Appliance Control
2 Door Bins
3 Flipper Mullion
4 Internal Water Dispenser
5 Shelves
6 Flipper Guide
7 Air Filter
8 Water Filter
9 Deli Drawer
10 Crispers
11 Freezer Ice Maker
12 Ice Bucket
13 Upper Freezer Baskets
14 Lower Freezer Baskets

3. INSTALLATION

This User Manual provides general installation and operating instructions for your model. We recommend using a service or kitchen contracting professional to install your appliance. Use the appliance only as instructed in this User Manual. Before starting the appliance, follow these important first steps.

3.1 ✓ Installation Checklist

Doors

❒ Handles are secure and tight
❒ Door seals completely the cabinet on all sides

Leveling

❒ Refrigerator is level side-to-side and slightly elevated in front to assist with door and drawer closing. Front should be higher than back.
❒ Cabinet is setting solid on all corners

Electrical Power

❒ House power is turned on
❒ Appliance is plugged in

Ice Maker

❒ House water supply is connected to the appliance

⚠ WARNING!

Potable water supply only.

❒ No water leaks present in any connections - recheck in 24 hours
❒ Ice maker is turned on
❒ Ice and water dispenser operates correctly

Final Checks

❒ Shipping material is removed
❒ Refrigerator and freezer temperatures are set
❒ Registration card is sent in

3.2 Tools necessary

These tools are necessary at different stages of the installation process:

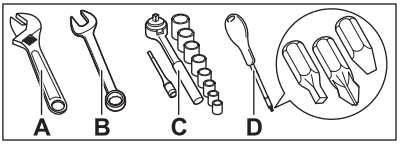

A. Adjustable Wrench
B. Fixed Wrench: 3/8"
C. Socket Wrench: 3/8" and 1/4"
D. Screwdriver: Phillips™ Head or Quadrex Head

Components Provided

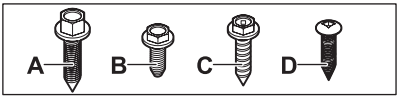

A. Top hinge screw
B. Top hinge cover front screw
C. Top hinge cover rear screw
D. Lower hinge screw

3.3 Location

- If possible, place the appliance out of direct sunlight and away from the range, dishwasher, or other heat sources.
- The appliance must be installed on a floor that is level and strong enough to support a fully loaded appliance.
- Consider water supply availability for models equipped with an automatic ice maker.

⚠ WARNING!

This appliance is intended for use in residential household and similar interior applications such as:

- Kitchen / kitchenette
- Pantry room
- Basement
- Enclosed garage
- Other interior residential type environments

⚠ CAUTION!

Do not install the appliance where the temperature will drop below 55°F (13°C) or rise above 110 °F (43 °C). The compressor will not be able to maintain proper temperatures inside the appliance.

⚠ WARNING!

Allow the following clearances for ease of installation, proper air circulation, plumbing, and electrical connections:

- Top 3/8" (9.5 mm)
- Sides 3/8" (9.5 mm)
- Back 1" (25.4 mm)

NOTE

If you place the appliance with the door hinge side against a wall, you may have to allow additional space so the door can be open wider.

3.4 Door opening

Position the appliance to allow easy access to a counter when removing food. Make sure the refrigerator drawers and freezer baskets can be fully open.

3.5 Cabinet leveling and door alignment

Guidelines for final positioning of appliance:

- All 4 corners of the cabinet must rest firmly on the floor.
- Slightly elevate the front to ensure that doors close and seal properly.
- Align the doors with each other and level them.

You can meet most of these conditions by raising or lowering the adjustable front rollers.

3.6 Flipper mullion

Adjust the flipper mullion for proper connection with the mullion guide. Ensure the flipper mullion is folded and perpendicular to the fresh food door. If the mullion guide is not in the correct position, it could prevent the door from closing completely.

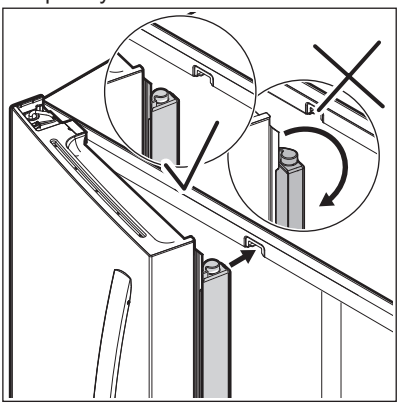

To adjust the flipper mullion:

1. Loosen the 2 screws located on the flipper mullion hinge.

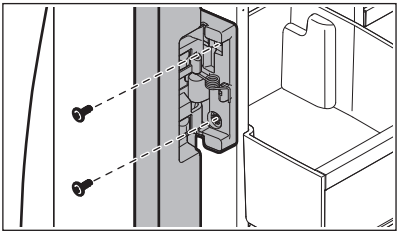

2. Adjust the flipper mullion height. For proper connection with the flipper mullion guide, there should be a separation about the thickness of a coin (0.060", or 1.5 mm) between the guide (B) and flipper mullion (A).

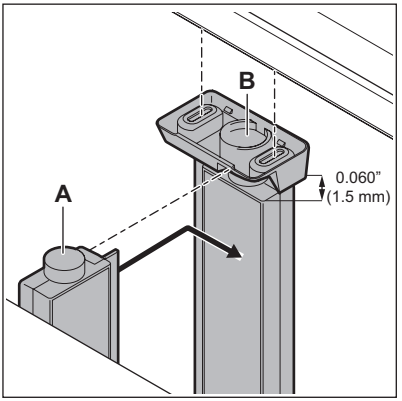

3. Retighten the screws.

3.7 Leveling

Level the cabinet by raising or lowering the adjustable front rollers.

1. Slightly open freezer drawer to reveal adjustable rollers at bottom of cabinet.
2. Use the front roller height adjusting screws to make initial cabinet adjustments. Use a 3/8" socket wrench to turn the adjustment screws (1 per side).
   - Turn adjustment screw clockwise to raise the unit.
   - Turn adjustment screw counterclockwise to lower the unit.

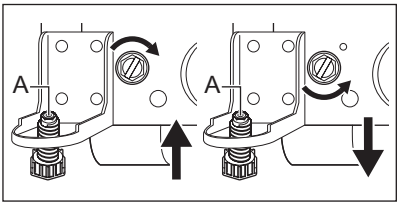

3. Ensure both doors are bind-free with their seals touching the cabinet on all 4 sides and that cabinet is stable.
4. After unit is leveled, lower the anti-tip leg (A) until it firmly contacts the floor. An adjustable wrench may be necessary for adjustment.

3.8 Door Alignment

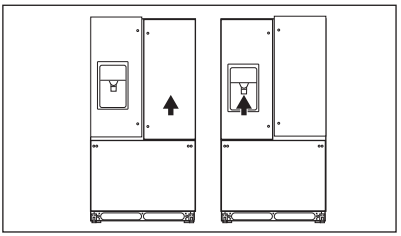

To align the door:

1. Take the washers from the plastic bag.
2. Lift the lower door up and insert the washer on the center hinge pin.
3. If necessary, repeat the steps on the other side of the appliance.

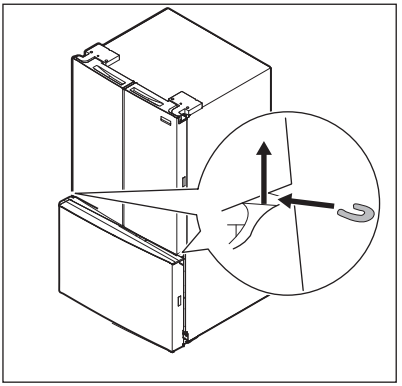

4. DOOR REMOVAL

4.1 Getting through narrow spaces

If your appliance does not fit through an entrance area, you can remove the doors. Check first by measuring the entrance.

4.2 Removing/Installing refrigerator doors

To prepare for removing the doors:

1. Unplug the electrical power cord from the wall outlet.
2. Remove any food from the door shelves and close the doors.

> ⚠ **WARNING!**
>
> Make sure the electrical power cord is unplugged from the wall outlet.

To remove refrigerator doors:

1. Remove the 3 screws from both hinge covers on the left and right top of the cabinet. Be careful not to damage electrical connections or sensors.

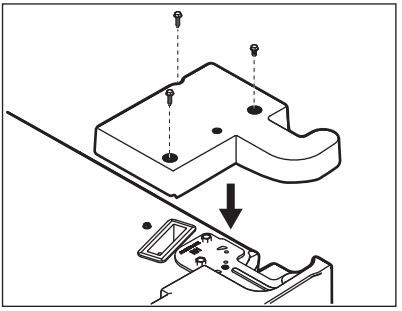

2. After the hinge covers are removed, disconnect any harnesses between the cabinet and doors by grasping both sides of the connector firmly, depress the latch and pull apart.

Dispenser Model Left/Right Door

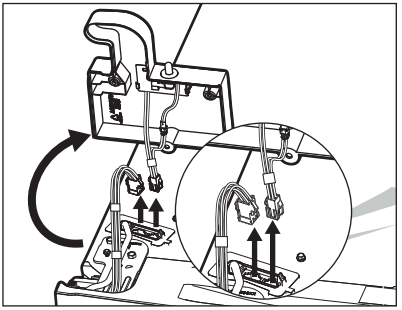

Non-Dispenser Model Left/Right Door

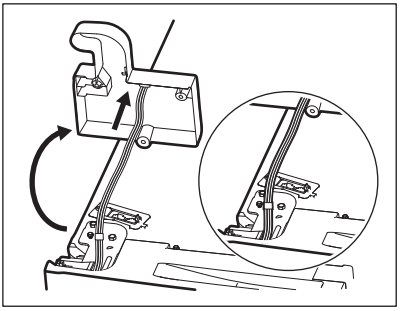

3. Trace lightly around the door's top hinges with a pencil. This makes reinstallation easier.

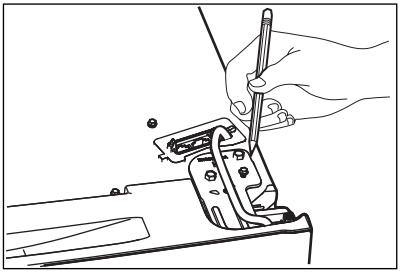

4. Remove bulkhead cover at rear of unit to access water tubing. Disconnect the water tube at the push-lock connection on the rear of the unit below the bulkhead. The dispenser line is connected to the yellow water line coming from the main water valve. [1)]

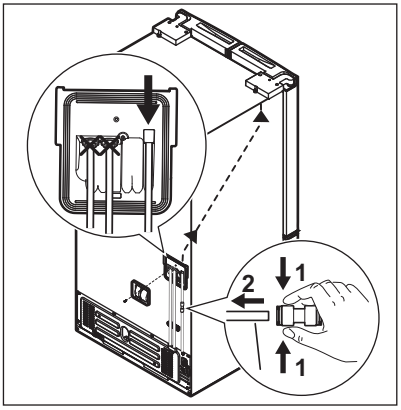

5. Pull the water tube out of the conduit from the top of the cabinet.

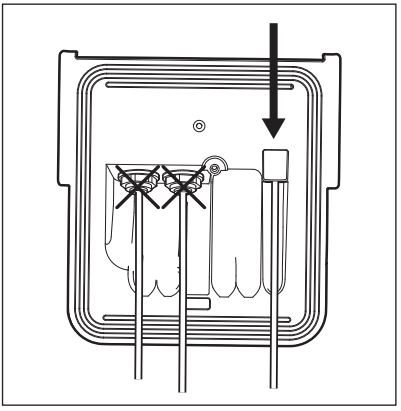

NOTE

You will be pulling approximately five feet of water tube from the back of the refrigerator. Use care while pulling the water tube from the unit to be sure that you do not kink the tube.

6. Open both doors to a 90° angle.

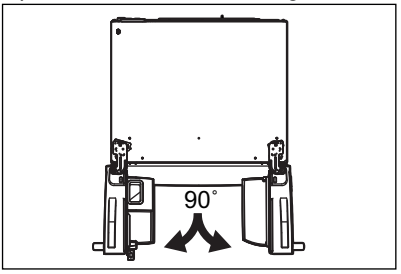

⚠ CAUTION!

Be sure doors are set aside in a secure position where they cannot fall and cause personal injury, or damage to the doors or handles.

7. Remove hex screws from top hinge plate, then remove the top hinge.

[1)] Dispenser only

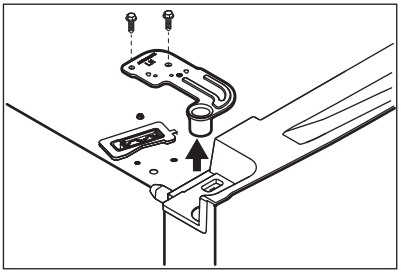

8. Lift doors off bottom hinges and set aside.
9. Unscrew the three bottom hinge screws and remove the bottom hinges.

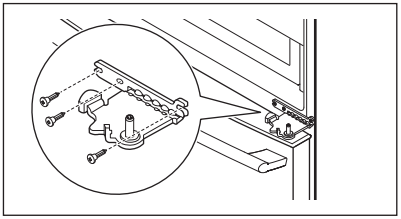

To install refrigerator doors:

1. Replace 3 bottom hinge screws and hinges on both sides of the cabinet. Ensure screws are tightly snug to hinges on both sides of the cabinet before reinstalling doors.
2. Reinstall top hinges and screws.
3. Insert and feed water line back into the conduit at the top left door hinge until tube reappears at rear of unit.

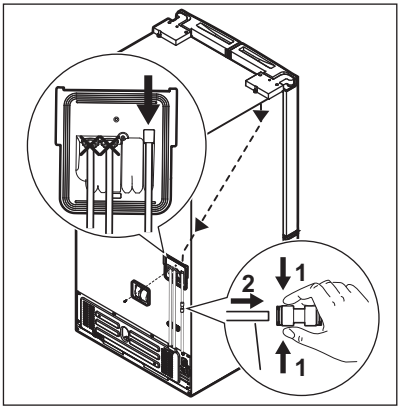

4. Reconnect all harnesses.
5. Replace top hinge covers and screws.
6. Reconnect water line to push-lock connection and reinstall water line bulkhead cover at rear of unit.
7. Reconnect electrical power cord to the wall outlet.

4.3 Removing/Installing freezer drawer

⚠ CAUTION!

The drawer is heavy. Use caution when lifting.

To remove the drawer:

1. Remove the 4 hex head drawer screws (2 per side) securing the drawer to the slide assemblies.

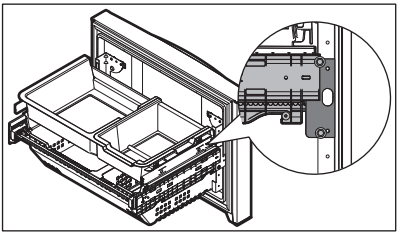

2. Lift up drawer to remove it.

To install the freezer drawer:

1. Extend the freezer slides from the unit.
2. Carefully align support pin with hooks on end of freezer slides and then lower freezer door onto slides.
3. Replace the 4 hex head screws that secure the slides to the door (2 on each side).

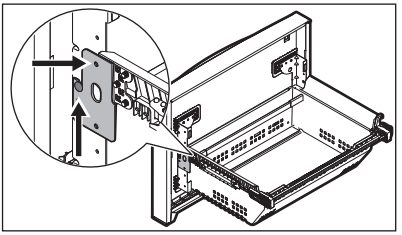

NOTE

To locate the pin, look inside the drawer and the pin is next to the door liner and the slides. Not all parts are shown in the illustration.

4. Open the freezer door slightly to have access to the two screws at each side.
5. Tilt the door until door is parallel to cabinet front face.
6. Tighten the 4 hex head screws, 2 at each side.

5. DOOR HANDLE INSTALLATION

⚠ CAUTION!

Wear gloves and safety goggles. Use extreme caution when installing these handles.
The rounded end of the handles may be sharp (some models).

5.1 Door handle installation

To install the door handle:

1. Remove the handles and any other protective packaging from the carton.
2. Position the handle end caps over upper and lower preinstalled shoulder bolts (A) that are fastened into door, ensuring the holes for the set screws are facing towards the opposite door.
3. While holding handle firmly against door, fasten upper and lower Allen set screws (B) with supplied Allen wrench.
4. Repeat the steps above to install the opposite handle. Ensure the holes for the set screws are facing towards the opposite door.

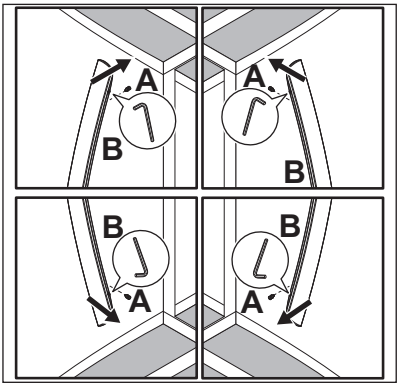

NOTE

When tightening the Allen set screws, apply force to the longer arm of the Allen wrench supplied in the handle packaging.

6. WATER SUPPLY CONNECTION

6.1 Before Installing The Water Supply Line

⚠ WARNING!

To avoid electric shock, which can cause death or severe personal injury, disconnect the appliance from the electrical power before connecting a water supply line to the appliance.

⚠ CAUTION!

To avoid property damage:

- Use copper or stainless steel braided tubing for the water supply line. Do not use water supply tubing made of 1/4" plastic. Plastic tubing greatly increases the potential for water leaks, and the manufacturer will not be responsible for any damage if you use plastic tubing for the supply line.
- Do not install water supply tubing in areas where temperatures fall below freezing.
- Chemicals from a malfunctioning softener can damage the ice maker. If the ice maker is connected to soft water, ensure that the softener is maintained and working properly.

IMPORTANT

Ensure your water supply line connections comply with all local plumbing codes.

6.2 You will need

- Basic tools: adjustable wrench, flat-blade screwdriver, and Phillips™ screwdriver.
- Access to a household cold water line with water pressure between 30 and 100 psi.
- A water supply line made of 1/4" (6.4 mm) OD, copper or stainless steel tubing. To determine the length of tubing needed, measure the distance from the ice maker inlet valve at the back of the appliance to your cold water pipe. Then add approximately 6 ft (1.8 m) to ensure you can move the appliance for cleaning.
- A shutoff valve to connect the water supply line to your household water system. Do not use a self-piercing type shutoff valve.
- Do not reuse compression fitting or use thread seal tape.
- A compression nut and ferrule (sleeve) for connecting a copper water supply line to the ice maker inlet valve.

NOTE

Check with your local building authority for recommendations on water lines and associated materials prior to installing your new refrigerator. Depending on your local/state building codes, Frigidaire recommends:

- for homes with existing valves Smart Choice® water line kit 5305513409 with a 6 ft (1.8 m) stainless steel water line.
- for homes without an existing valve Smart Choice® water line kit 5305510264 with a 20 ft (6 m) copper water line with self-tapping saddle valve.

Please refer to Frigidaire.com for more information.

6.3 Installing the water supply line

NOTE

These instructions do not cover after market ice maker installation. Instructions in after market ice maker kit should be used.

IMPORTANT

Your appliance water supply system includes several tubing lines, a water filter, and a water valve. To ensure that your water dispenser works properly, this system must be completely filled with water when your appliance is first connected to the household water supply line.

To connect water supply line to ice maker inlet valve:

1. Disconnect refrigerator from electric power source.
2. Place end of water supply line into sink or bucket. Turn on water supply and flush supply line until water is clear. Turn off water supply at shutoff valve.
3. Remove plastic cap from water valve inlet and discard cap.
4. Depending on the tubing you use:
   - Copper tubing - Slide brass compression nut, then ferrule (sleeve) onto water supply line. Push water supply line into water valve inlet as far as it will go (1/4" /

6.4 mm). Slide ferrule (sleeve) into valve inlet and finger tighten compression nut onto valve. Tighten another half turn with a wrench; do not over tighten.

- Braided flexible stainless steel tubing - The nut is already assembled on the tubing. Slide nut onto valve inlet and finger tighten nut onto valve. Tighten another half turn with a wrench; do not over tighten.

5. With steel clamp and screw, secure water supply line to rear panel of the appliance.
6. Coil excess water supply line (copper tubing only), about 2.5 turns, behind refrigerator as shown and arrange coils so they do not vibrate or wear against any other surface. Do not kink tubing.
7. Turn on water supply at shutoff valve and tighten any connections that leak.
8. Reconnect refrigerator to electrical power source.
9. Turn the ice maker on.

Copper tubing installation

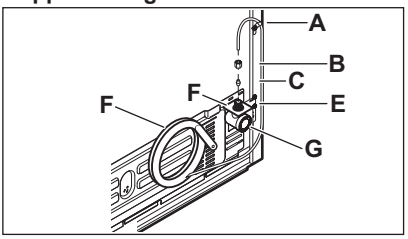

Braided flexible stainless steel tubing installation

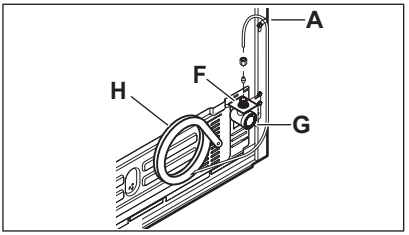

A. Steel clamp
B. Brass compression nut
C. Ferrule (sleeve)
D. Copper water line*
E. Water valve bracket
F. Valve inlet
G. Water valve
H. 6 ft (1.8 m) braided flexible stainless steel water line from household water supply*

*Include enough tubing in the loop to allow moving the refrigerator out for cleaning.

7. CONTROLS AND SETTINGS: EXTERNAL WATER DISPENSER

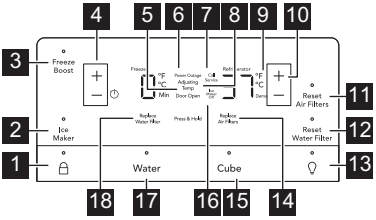

1 Lock button
The Lock prevents the display from unintended use. Press and hold the Lock button for 3 seconds to enable/disable.

While Lock is enabled, you cannot change settings on the display. Dispensing ice and water is disabled. When you interact with the display, the indicator flashes, and an audible warning tone sounds.

2 Ice Maker
Press and hold for 3 seconds to turn ice maker on/off. When indicator is lit, ice maker is on. When indicator is not lit, ice maker is in the Off state and stops making ice. While off, ice dispensing can continue as long as there is ice in the bucket. When ice

maker is off and ice is dispensing, indicator blinks.

3 **Freeze Boost**
Prior to grocery shopping, activate Freeze Boost to lower the temperature and freeze food faster. Freeze Boost stays active for up to 24 hours before automatic deactivation. You can turn it off manually by pressing Freeze Boost button. This restores the freezer to the previous temperature setting.

4 **Freezer Temperature Adjustment buttons**
Press either the + or – to adjust the temperature.
The temperatures range from -8°F (-22°C) to 6°F (-14°C).

5 **Door Open**
If the door is left open for 5 minutes or more, the Door Open indicator illuminates and the audible alert is on. Press the Door Open button or close the door to turn off the alert. If the door is left open for 5 minutes, the interior light turns off.

6 **Power Outage**
After a power outage, the indicator lights up, and a tone sounds. Press any button to silence the tone.

7 **Call Service**
It illuminates when the appliance requires service.

8 **Adjusting Temp**
It illuminates during temperature adjustments and remains lit until the refrigerator and freezer reach the set temperatures. Press either + or - to adjust the temperature. The set temperature is reached within 24 hours.

9 **°F/°C**
Set the temperature unit. To toggle between Fahrenheit (°F) and Celsius (°C), simultaneously press and hold + and – for 5 seconds on refrigerator side of the display.

10 **Refrigerator Temperature Adjustment buttons**
Press either the + or – to adjust the temperature.
The temperatures range from 33°F (1°C) to 43°F (6°C).

11 **Reset Air Filter**
Filter condition status is always displayed when the door is open. Press and hold Reset Air Filter button for 3 seconds to reset after changing the filter.

12 **Reset Water Filter**
Press and hold the button for 3 seconds to reset after changing the filter.

13 **Light**
Press to switch the dispenser light on and off.

14 **Replace Air Filters**
It illuminates every 6 months or when filter needs replacing. Replace the filter. Press and hold Reset Air Filters button for 3 seconds to deactivate the warning on the display. Refer to Filter Replacement.

15 **Cube**
Press the button to select cubed ice. The indicator is lit above the active feature.

16 **Ice Maker Off**
It illuminates when the Ice Maker is off.

17 **Water**
Press the button to select water. The indicator is lit above the active feature.

18 **Replace Water Filter**
It illuminates every 6 months or after dispensing 120 gallons of water. Replace the filter. Press and hold Reset Water Filter button for 3 seconds to deactivate the warning. Refer to Filter Replacement.

Clear Alerts

- **High Temp Alarm**
  The alarm sounds in the event of a high temperature condition. The appliance control panel displays HI for whichever compartment the alarm is detected in and the alarm sounds every 10 seconds until acknowledged. Touch any key or open a door to silence the alarm.
- **Flapper**
  If a jammed ice cube holds the flapper (or ice chute door) open when you select Cube, the alarm sounds and the current selection blinks on the dispenser control. The alarm resets when you remove the ice cube.

Display Modes

- Sleep mode
  As a default, the display goes to sleep after a short time. If you press any icon, the display awakens. After a short time,

it goes back to sleep. When in sleep mode, wake up the appliance control display to confirm the ice maker is on/off. You can turn sleep mode off to have the display on full time (awake mode). When sleep mode is off, the display is always illuminated. To turn sleep mode on/off, simultaneously press and hold Cube and Light for 5 seconds. A tone confirms.

- Awake Mode
  To change from sleep mode to awake mode, simultaneously press and hold Cube and Light for 5 seconds. The display shows the current temperature/ice maker status. A tone confirms.

7.1 Setting cooling temperatures (options may vary)

NOTE

The recommended settings for a product installed in a kitchen is 37°F for the fresh food compartment and 0°F for the freezer.

IMPORTANT

If your product has food freezing in the fresh food compartment, increase the temperature setting 1 or 2°.

IMPORTANT

If you place food within 1" in front of the air ports, there may be the chance of freezing food.

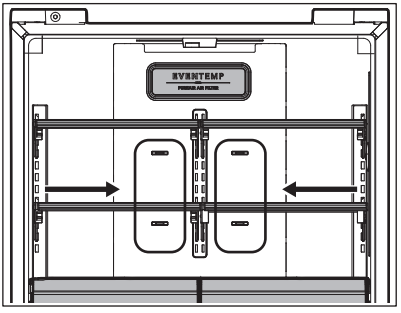

7.2 Sabbath Mode

NOTE

While in Sabbath Mode, neither the lights, dispenser, nor the control panel will work until Sabbath Mode is deactivated. Refrigerator stays in Sabbath Mode after power failure recovery. It must be deactivated with the buttons on the control panel.

NOTE

Although you have entered the Sabbath Mode, the ice maker will complete the cycle it had already initiated. The ice cube compartment will remain cold and new ice cubes can be made with standard trays.

The Sabbath Mode is a feature that disables portions of the refrigerator and its controls in accordance with observance of the weekly Sabbath and religious holidays within the Orthodox Jewish community.

Sabbath Mode is turned on and off by simultaneously pressing and holding both the FZ- and FF+ for 10 seconds. The display shows Sb while in Sabbath mode.

In the Sabbath Mode, the High Temp alarm is active for health reasons. For example, if the door is left ajar the High Temp alarm is activated. The refrigerator will function normally once the door is closed, without any violation of the Sabbath/Holidays. The High Temp alarm is permitted when cabinet temperature is outside the safe zone for 20 minutes. The alarm silences itself after 10 minutes while the High Temp icon stays lit until the Sabbath mode is exited.

For further assistance, guidelines for proper usage and a complete list of models with the Sabbath feature, visit the web at star-k.org.

8. CONTROLS AND SETTINGS: INTERNAL WATER DISPENSER

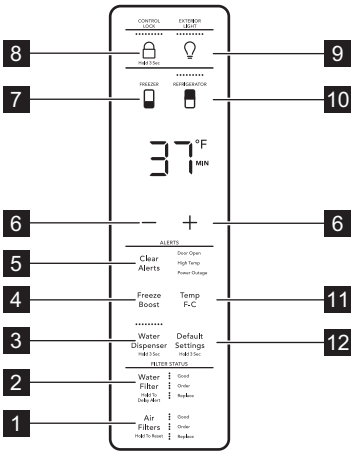

1 **Air Filters**
Press and hold to reset after replacing the filters. The status shown at the right of the button resets to Good.

2 **Water Filter**
Press and hold to reset after replacing the filters. The status shown at the right of the button resets to Good.

3 **Water Dispenser**
When the water dispenser is on the LEDs above Water Dispenser illuminate.

4 **Freeze Boost**
Prior to grocery shopping, activate Freeze Boost to lower the temperature and freeze food faster. Freeze Boost stays active for up to 24 hours before automatic deactivation. You can turn it off manually by pressing Freeze Boost. This restores the freezer to the previous temperature setting.

5 **Clear Alerts**
Resets any active and illuminated alarms:
Door Open, High Temp, Power Outage.

6 **Temperature adjustment buttons**
Press + or - to adjust the temperature.

7 **Refrigerator compartment button**
Select Refrigerator compartment to change the temperature.
Select + / - buttons to set the temperature.
Refrigerator control range: +33°F (+1°C) to +43°F (+6°C).

8 **Lock button**
The Lock prevents the display from unintended use. Press and hold the Lock button for 3 seconds to enable/ disable.
While Lock is enabled, you cannot change settings on the display. Dispensing ice and water is disabled. When you interact with the display, the indicator flashes, and an audible warning tone sounds.

9 **Light button**
Your appliance has exterior lights under the refrigerator doors and the Custom-Flex™ Temp drawer. Press and hold the light button for 5 seconds to enable the lights. The lights will remain on until you disable them by pressing and holding the button for 2 seconds.

10 **Freezer compartment button**
Select Freezer compartment to change the temperature.
Select + / - buttons to set the temperature.
Freezer control range: -8°F (-22°C) to +6°F (-14°C).

11 **Temp F-C**
Touch to switch from Fahrenheit to Celsius.

12 **Default Setting**
Press and hold for 3 seconds to reset to Factory settings.

Display modes
Your display is equipped with a sleep and lock mode to prevent accidental changes to the appliance settings during opening and closing of the doors. When both doors are closed, the display is in the sleep mode. When either door is first opened, the display is in lock mode where all the current settings are visible but dimmed.

Pressing any button on the display awakes the display and a tone plays. All settings then are fully lit. Touch the display again to change any setting.

If there is no button pressed for 10 seconds while any door is open, the

display comes back to lock mode by default.

8.1 Clear Alerts

Door Open
If you leave freezer or refrigerator doors open for 5 minutes or more, the alarm sounds and the Door Open indicator illuminates on the control display. Press Clear Alert to reset the alarm.

High Temp Alarm
High Temp illuminates next to Clear Alerts. The alarm plays every 60 seconds. Press Clear Alerts to acknowledge the alarm. The highest temp value displays when you first acknowledge the alarm.

Power Outage
In the event of a power outage, Power Outage illuminates. Press Clear Alerts to acknowledge the alarm. Other modes may be turned off until you acknowledge the alarm. While Power Outage displays on the control display, the unit continues normal operation. High Temp may also illuminate until you have reached a safe operating range temperature.

8.2 Sabbath Mode

NOTE

While in Sabbath Mode, neither the lights, dispenser, nor the control panel will work until Sabbath Mode is deactivated. Refrigerator stays in Sabbath Mode after power failure recovery. It must be deactivated with the buttons on the control panel.

NOTE

Although you have entered the Sabbath Mode, the ice maker will complete the cycle it had already initiated. The ice cube compartment will remain cold and new ice cubes can be made with standard trays.

The Sabbath Mode is a feature that disables portions of the refrigerator and its controls in accordance with observance of the weekly Sabbath and religious holidays within the Orthodox Jewish community.

Turn Sabbath mode ON and OFF by simultaneously pressing and holding both — and Temp F-C for five seconds. The display shows Sb while in Sabbath mode.

In the Sabbath Mode, the High Temp is active for health reasons. For example, if you leave the door ajar High Temp activates. The refrigerator functions normally once you close the door, without any violation of the Sabbath/Holidays. The High Temp is permitted when the cabinet temperature is outside the safe zone for 20 minutes. The alarm silences itself after 10 minutes while the High Temp stays lit until you exit the Sabbath mode.

For further assistance, guidelines for proper usage and a complete list of models with the Sabbath feature, visit the web at star-k.org.

9. AUTOMATIC ICE AND WATER DISPENSER

NOTE

Refrigerator Ice Maker (External Dispenser Models Only)

9.1 Priming the water supply system

Before making ice for the first time, prime the water supply system. Air in new plumbing lines can result in two or three empty ice maker cycles. If the system is not flushed, the first ice cubes may have discolored water or have an odd flavor.

Purge air from the system:

1. Press and hold a drinking glass against the water dispenser paddle until water comes out (it may take up to 4 minutes to purge air from the system).
2. Run approximately 1 full gallon of water through the dispenser before use, and discard.

Dispenser (varies by model)

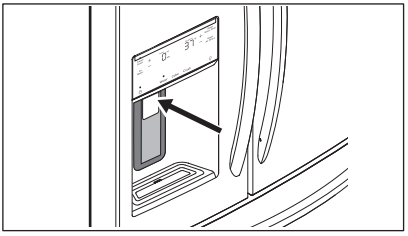

⚠ CAUTION!

For proper dispenser operation, the recommended water supply pressure should fall between 30 psi and 100 psi. Excessive pressure may cause the system to malfunction.

NOTE

The water dispenser has a built-in device that shuts off the water flow after 3 minutes of continuous use. To reset this shutoff device, release the dispenser paddle.

NOTE

Dispensed water is not chilled. For colder water, add ice to cup or container before dispensing water.

9.2 Ice maker Operation and Care

After you properly install the refrigerator and it has cooled for several hours, the ice maker can produce ice within 24 hours.

When using the ice maker for the first time, and in order for it to work properly, you need to clear air from the water tubing and the filter. If you do not flush the system, the first ice cubes may be discolored or have an odd flavor. Once the ice maker begins making ice, allow the bin to fill completely, and then discard the first full bin of ice.

9.3 Storage bin capacity

In a standard depth model, the refrigerator ice maker should produce 3 to 3.4 lbs of ice per 24 hours. In a counter depth model, the refrigerator ice maker should produce 2.7 to 3.2 lbs of ice per 24 hours.

In a standard depth model, the refrigerator ice bin holds around 5 lbs of ice. In a counter depth model, the refrigerator ice bin holds around 3.7 lbs of ice.

9.4 Turning the ice maker on/off

Ice production is controlled by the ice maker On/Off feature on the appliance control display. Press the On/Off feature to turn the ice maker on and off.

IMPORTANT

Turning off the ice maker disables ice making. You will still be able to dispense existing ice, and dispense water.

NOTE

The ice maker also has a built-in plastic signal arm that automatically stops ice production when the ice bin is full. This signal arm should not be used to manually stop the ice maker.

IMPORTANT

Your ice maker is turned on at the factory so it can work as soon as you install your refrigerator. If you cannot connect a water supply, set the ice maker On/Off feature to Off; otherwise, the ice maker fill valve may make a loud chattering noise when it attempts to operate without water.

IMPORTANT

On occasion, you may notice unusually small ice cubes in the bucket or in dispensed ice. This could occur in normal operation of the ice maker. If you start seeing these more frequently, it may be an indication of low water pressure or the water filter needs to be replaced. As the water filter nears the end of its useful life and becomes clogged with particles, less water is delivered to the ice maker during each cycle. If it has been 6 months or longer since you last changed your water filter, replace the water filter with a new one. Poor quality household water may require the filter to be changed more frequently.

9.5 Ice maker/Dispenser Tips

- Ice cubes stored too long may develop an odd flavor. Empty the ice container as explained in Cleaning the ice maker section.
- If your refrigerator is not connected to a water supply or the water supply is turned off, turn off the ice maker.
- If you need a large quantity of ice at one time, it is best to get cubes directly from the ice container.
- The following sounds are normal when the ice maker is operating:
  - Motor running
  - Ice dropping into ice container
  - Water valve opening or closing
  - Running water
- When dispensing cubed ice, it is normal to have a small quantity of little pieces along with the whole cubes.
- To avoid splashing, dispense ice into your container before adding liquids.
- It is normal for ice to fill to the top of the ice bin.

⚠ CAUTION!

Chemicals from a malfunctioning water softener can damage the ice maker. If the water supply to your refrigerator is softened, be sure the softener is maintained to work properly.

9.6 Cleaning the ice maker

Clean the ice maker and ice bin at regular intervals, especially prior to vacation or moving.

1. Turn off the ice maker.
2. Lift the ice bin upward, and then pull it straight out to remove it.

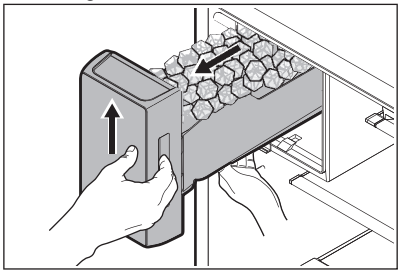

3. Empty and carefully clean the ice bin with mild detergent. Do not use harsh or abrasive cleaners. Rinse with clean water.
4. Allow the ice bin to dry completely before replacing it in the freezer.
5. Replace the ice bin.
6. Turn the ice maker on.

NOTE

When removing or replacing the ice bin, avoid rotating the auger in the ice bin. If the auger is accidentally rotated, you must realign the auger by turning it in 45° turns until the ice bin fits into place with the drive mechanism. If you do not properly align the auger when replacing the ice bin, the refrigerator will not dispense ice. The refrigerator door also may not close properly causing warm air to leak into the refrigerator compartment.

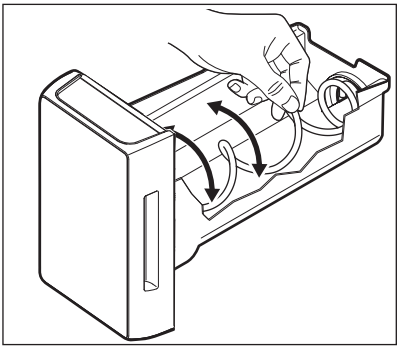

When to remove and empty the ice bin

Remove and empty the ice bin if:

- An extended power failure (one hour or longer) causes ice cubes in the ice bin to melt and re-freeze together after power is restored, jamming the dispenser mechanism.
- You do not use the ice dispenser frequently. Ice cubes will freeze together in the bin, jamming the dispenser mechanism.

⚠ CAUTION!

Never use an ice pick or similar sharp instrument to break up the ice. This could damage the ice bin and dispenser mechanism.
To loosen stuck ice, use warm water.
Before replacing the ice bin, make sure it is completely dry.

10. ICE MAKER

NOTE

Freezer Ice Maker available in:
- Non-Dispenser Models

10.1 Ordering the optional freezer ice maker

Order the optional freezer ice maker online at Frigidaire, by calling 1-800-374-4432, or through the dealer from which the refrigerator was purchased.

10.2 Ice maker operation and care

After you properly install the appliance, the ice maker can produce ice within 24 hours. When using the ice maker for the first time, and in order for it to work properly, you need to clear air from the water tubing and the filter. If you do not flush the system, the first ice cubes may be discolored or have an odd flavor. Once the ice maker begins making ice, allow the bin to fill completely, and then discard the first full bin of ice.

10.3 Storage Bin Capacity

This ice maker should produce approximately 2.5 lbs of ice per 24 hours depending on use.

The ice bin should hold:
- For a standard depth appliance: around 11 lbs of ice.
- For a counter depth appliance: around 9 lbs of ice.

NOTE

The ice maker only produces the specified rate if you set the temperature to 0°F.

NOTE

The freezer ice maker fills the ice bin more in one spot. Move the ice to the edges of the bin to allow it to fill completely.

10.4 Turning the ice maker on/off

Press the power button to turn the ice maker on (button will not illuminate).

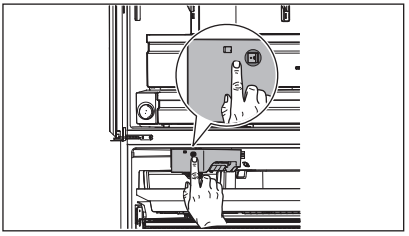

10.5 Ice maker tips

The following sounds are normal when the ice maker is operating:
- Motor running
- Ice dropping into ice bin
- Water valve opening or closing
- Running water

Ice cubes stored too long may develop an odd flavor. Empty the ice bin as explained below.

⚠ CAUTION!

If the water supply to your refrigerator is softened, properly maintain be sure the softener. Chemicals from a water softener can damage the ice maker.

11. STORAGE FEATURES

11.1 Shelves

⚠ CAUTION!

To avoid personal injury or property damage, handle tempered glass shelves carefully. Shelves may break suddenly if nicked, scratched, or exposed to sudden temperature change. Allow the glass shelves to stabilize to room temperature before cleaning. Do not wash in dishwasher.

You can easily adjust shelf positions in the refrigerator compartments to suit your needs. The shelves have mounting brackets that attach to slotted supports at the rear of each compartment.

1. Remove all the food from the shelf.
2. Lift the front edge up and pull the shelf out.

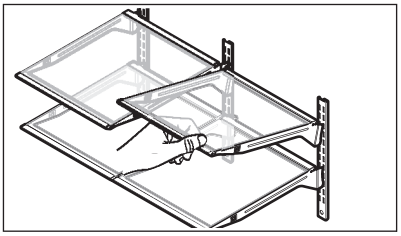

3. Replace by inserting the mounting bracket hooks into the desired support slots.
4. Lower the shelf and lock into position.

11.2 Reposition the air seal

➔ IMPORTANT

Be aware of the air seal located at the rear of the shelf. Shelves located on the left side should have the air seal mounted on the far left side. Shelves located on the right side should have the air seal mounted on the far right side. This is to ensure there is no interference with the large air tower on the back wall of the cabinet. This also applies to the crisper shelves.

For glass shelves:

1. Remove air seal by pushing seal straight back.
2. Position the air seal towards the outside edge of the shelf to avoid the air tower when shelf is pushed back into place.
3. Install seal by sliding the open channel end of the seal onto back edge of shelf until seal sits snug on back of shelf and flap sits at about a 10° angle from shelf surface.

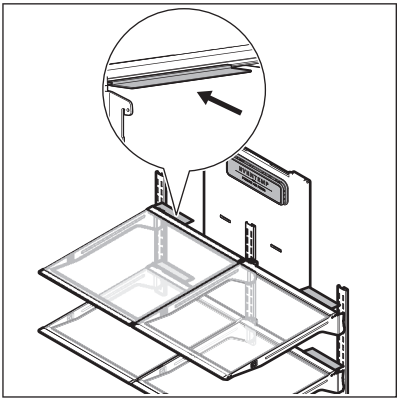

11.3 Drawers

This appliance includes a variety of storage drawers.

Crispers
Crispers are designed for storing fruits, vegetables, and other fresh produce.

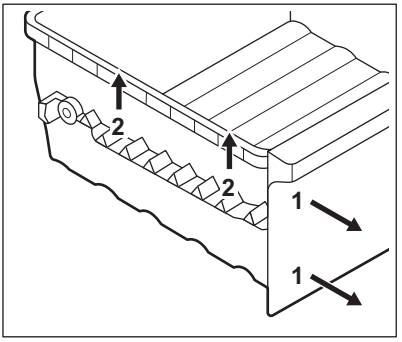

Deli drawer
Ideal for storage of deli meats, cheese, and beverages.

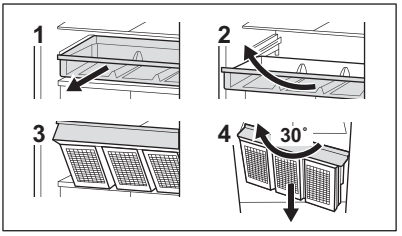

11.4 Doors

Storage bins (varies by model)
The doors to your refrigerator compartment use a system of modular storage bins. All of these bins are removable for easy cleaning. Some of them have fixed positions, while others can be adjusted to your needs.

Door bins are ideal for storing jars, bottles, cans, and large drink containers. They also enable quick selection of frequently used items.

11.5 Changing position of adjustable door bin

To change the position of an adjustable door bin:

1. Remove all food from door bin.
2. Grip the bin firmly with both hands and lift it upward.
3. Remove the bin.
4. Place the bin just above desired position.
5. Lower the bin onto supports until it is locked in place.
6. Place the bin liner into the bin.

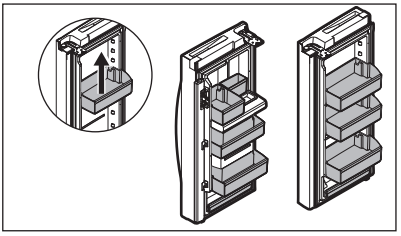

11.6 Removing/Installing Upper Freezer Drawer

To remove the upper freezer drawer:

1. Open the freezer compartment fully.
2. Lift the upper freezer drawer up and out.

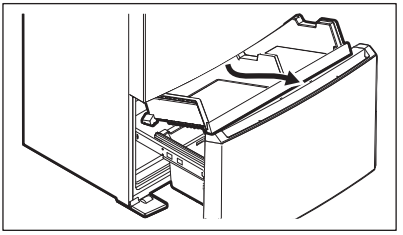

Reverse these steps to reinstall the drawer.

IMPORTANT

There are wheels on the bottom of the drawer. Make sure all wheels are aligned with their tracks for proper function. If the drawer is not aligned, it will cause problems with the door operation.

NOTE

If the basket does not rest on the stabilizer bar retainer clips, the drawer does not close correctly.

12. STORING FOOD AND SAVING ENERGY

12.1 Ideas for storing food

Fresh food storage
- Keep the fresh food compartment between 34°F and 40°F, with an optimum temperature of 37°F.
- Avoid overcrowding the refrigerator shelves, which reduces air circulation and causes uneven cooling.
- Avoid placing food in front of air ports.

Fruits and vegetables
- Store fruits and vegetables in crisper drawers, where trapped moisture helps preserve food quality for longer time periods.
- Wash items and remove excess water.
- Wrap any items that have strong odors or high moisture content.

Meat
- Wrap raw meat and poultry separately and securely to prevent leaks and contamination of other foods or surfaces.
- Use the deli drawer to store meat/poultry for short-term storage. Any meat to be kept longer than two days should be frozen.

Frozen foods storage
- Keep the freezer compartment at 0°F or lower.

- A freezer operates most efficiently when it is at least 2/3 full.

Packaging foods for freezing

- To minimize food dehydration and quality deterioration, use aluminum foil, freezer wrap, freezer bags, or airtight containers. Force as much air out of the packages as possible and seal them tightly. Trapped air can cause food to dry out, change color, and develop an off-flavor (freezer burn).
- Wrap fresh meats and poultry with suitable freezer wrap prior to freezing.
- Do not refreeze meat that has completely thawed.

Loading the freezer

- Prior to grocery shopping, activate Freeze Boost so that on your return you can ensure your newly purchased food designated for the freezer will be preserved as quickly as possible.
- Activating Freeze Boost also will help your freezer more efficiently maintain the selected temperature after placing new purchases with pre-existing frozen foods.
- Avoid adding too much warm food to the freezer at one time. This overloads the freezer, slows the rate of freezing, and can raise the temperature of frozen foods.
- Leave a space between packages, so cold air can circulate freely, allowing food to freeze as quickly as possible.

12.2 Ideas for energy saving

Installation

- Locate the refrigerator in the coolest part of the room, out of direct sunlight, and away from heating ducts or registers.
- Do not place the refrigerator next to heat-producing appliances such as a range, oven, or dishwasher. If this is not possible, a section of cabinetry or an added layer of insulation between the two appliances will help the refrigerator operate more efficiently.
- Level the refrigerator so that the doors close tightly.

Temperature setting

- Refer to Controls and Settings for procedures on temperature settings.

Food storage

- Avoid overcrowding the refrigerator or blocking cold air vents. Doing so causes the refrigerator to run longer and use more energy.
- Cover foods and wipe containers dry before placing them in the refrigerator. This cuts down on moisture build-up inside the unit.
- Organize the refrigerator to reduce door openings. Remove as many items as needed at one time and close the door as soon as possible.
- Do not place a hot container directly on a cold shelf. Remember, such an extreme temperature change may damage the glass.

13. NORMAL OPERATING SOUNDS

13.1 Understanding the sounds you may hear

Your new, high-efficiency appliance may introduce unfamiliar sounds. These sounds normally indicate your appliance is operating correctly. Some surfaces on floors, walls, and kitchen cabinets may make these sounds more noticeable.

NOTE

Energy efficient foam in your appliance is not a sound insulator.

Following is a list of major components in your appliance and the sounds they can cause:

A. Evaporator. Refrigerant through the evaporator may create a boiling or gurgling sound.

B. Evaporator fan. You may hear air being forced through the refrigerator by the evaporator fan.

C. Defrost heater. During defrost cycles, water dripping onto the defrost heater may cause a hissing or sizzling sound.

After defrosting, a popping sound may occur.

D. Automatic Ice maker. When ice has been produced, you will hear ice cubes falling into the ice bin.

E. Electronic control & automatic defrost control. These parts can produce snapping or clicking sound when turning the cooling system on and off.

F. Condenser fan. You may hear air being forced through the condenser.

G. Compressor. Modern, high-efficiency compressors run much faster than previous models. The compressor may have a noticeable hum or pulsating sound during operation.

H. Water valve. Makes a buzzing sound each time it opens to fill the ice maker.

I. Drain pan (not removable). You may hear water dripping into the drain pan during the defrost cycle.

J. Condenser. May create minimal sounds from forced air.

K. Motorized damper. May produce intermittent humming during operation.

L. Ice chute. When dispensing ice, you will hear a snapping or clicking sound when the solenoid opens and closes the ice chute.

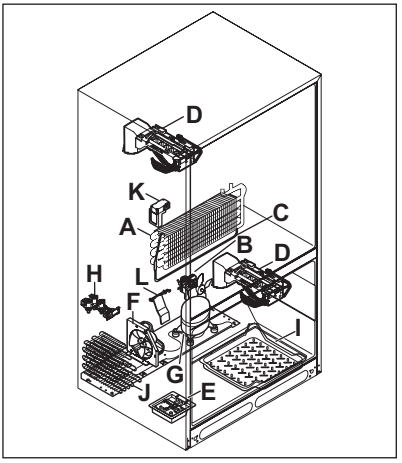

NOTE

During automatic defrost cycle, a red glow in the back wall vents of your freezer compartment is normal.

14. FILTER REPLACEMENT

14.1 PurePour™ Water Filter

Keep safe, great-tasting water flowing with a PurePour™ water filter. Using a PurePour™ water filter:

- **Makes safe water second nature**
  PurePour™ water filters are certified to reduce contaminates* and keep great-tasting water flowing for you and your family.
- **Produces purity you can trust**
  Know for certain your PurePour™ water filter is a protector. Counterfeits and knockoffs put your refrigerator and health at risk. Frigidaire Genuine Filters are the smarter, safer choice.
- **Every drop gives back**
  Partnered on sustainability efforts the use of a PurePour™ water filter helps cut back on the cost and use of plastic used to produce and package bottled water

*For the complete list, please see Performance Data Sheet on Frigidaire.com.

14.2 Ordering replacement filters

NOTE

When you order your replacement filter, please reorder the same filter type currently in your refrigerator.

To order your replacement filters, please call toll-free at 1-800-374-4432, or visit Frigidaire.com. Frigidaire recommends that you order extra filters when you first install your appliance, and that you replace your filters at least once every 6 months.

Here are the product numbers to request when ordering:

PurePour™ Water Filter PWF-1™ FPPWFUO1

Find the Performance Data Sheet located in the Guides and Manuals section for your specific water filter on Frigidaire.

14.3 More about your advanced water filter

LEAD FREE
UPC
C ®

The PurePour™ ice and water filter system is tested and certified by IAPMO R&T against Standards 42, 53, 401 and NSF/ANSI/CAN 372CSA B483.1 in PurePour™ PWF-1 for the reduction of claims specified on the Performance Data Sheet.
Visit Frigidaire.com for more information.

Do not use with water that is microbiologically unsafe or of unknown quality without adequate disinfection before or after the system. Use systems certified for cyst reduction on disinfected waters that may contain filterable cysts.

Test & certification results

- Rated Capacity - 125 gal / 453 L for PurePour™ and ice and water filter
- Rated service flow - .50 gal/min
- Operating Temperature: Minimum: 33°F, Maximum: 100°F
- Maximum rated pressure - 100 lbs/in²
- Recommended minimum operating pressure: 30 lbs/in²

14.4 Replacing your PurePour™ water filter

The water filter is located at the top right corner of the appliance.

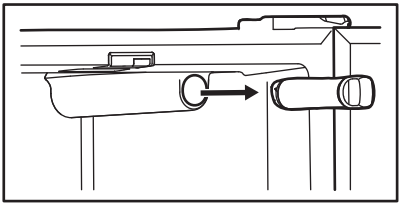

In general, you should change the water filter every 6 months to ensure the highest possible water quality. Water Filter Status on the user interface prompts you to replace the filter after a standard amount of water (125 gal / 453 L for PurePour™) has flowed through the system.

If you have not used your appliance for a period of time (during moving for example), change the filter before reinstalling the appliance.

It is not necessary to turn the water supply off to change the filter. Small amounts of water may be released during the filter replacement.

1. Turn off Ice Maker on the appliance control display.
2. Remove the old filter by rotating it counterclockwise (to the left) 90º to release it.
3. Slide the old water filter cartridge straight out of the housing and discard it.
4. Unpack the new filter cartridge. Slide it into the filter housing as far as it will go with the grip end horizontal.
5. Push lightly inward on the filter while rotating it clockwise (to the right). The filter will then pull itself inward as it is rotated. Rotate the filter 90º until it stops and the grip end is vertical. You may hear a very light click as the filter locks into place.
6. Press and hold the Reset Water Filter button on the appliance control display for 3 seconds. When the indicator no longer illuminates, the water filter status is reset..
7. Turn on Ice Maker on the appliance control display.
8. In order for the ice maker to work properly, clear air from the water filter tubing by filling the ice bin completely twice. Discard the ice produced.

14.5 PureAir™ Air Filter

The air filter is located at the top of the air tower.

To order replacement filters, please visit our online store at Frigidaire.com or call toll-free at 1-800-374-4432. Here are the product numbers to request when ordering:

- PureAir™ RAF-2 Air Filter FRGPAAF2

NOTE

We recommend you always use genuine Frigidaire replacement filters only.

14.6 Replacing your PureAir™

To ensure optimal filtering of refrigerator odors, you should change the air filter every 6 months. The filter status light on

the main controls prompts you to replace the filter after 6 months.

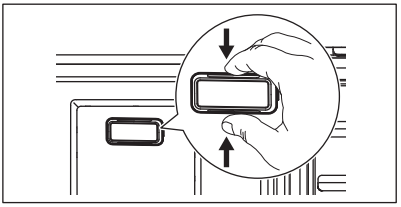

To remove and replace the air filter:

1. Remove the air filter cover by squeezing the top and bottom of the cover together and removing from liner.
2. Remove the old filter and discard it.
3. Unpack the new filter and snap it into the filter cover. Install the open face (carbon media) of the filter facing outward in the cover.
4. Replace air filter cover by squeezing and snapping it back into place.
5. Press and hold the Reset Air Filter button on the appliance control display for 3 seconds. When the indicator turns off, the status has been reset.

14.7 PureAir Produce Keeper™

NOTE

PureAir Produce Keeper™ accessories are optional and may be installed in most models at any time. Visit Frigidaire.com for information about PureAir Produce Keeper™ PK-1 accessories.
Part # FRPAPKRF.

Keep fruits and vegetables fresher longer with PureAir Produce Keeper™. Our produce keeper absorbs ethylene gas, the natural gas that causes produce to ripen quicker. Reduce food waste, save money and enjoy fresh-tasting produce with a longer storage life.

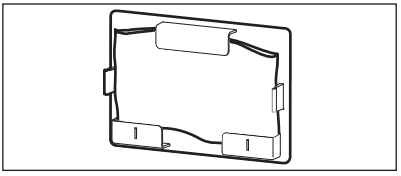

Ordering Replacement Filters
To order your replacement filters, please visit our online store at Frigidaire.com, by calling toll-free at 1-800-374-4432, or by visiting the dealer where you purchased your refrigerator. Frigidaire recommends that you replace your filters at least once every 6 months.

Here are the product numbers to request when ordering:

PureAir Produce Keeper™ PK-1 Part #FRPAPKRF .

14.8 Installing the PureAir Produce Keeper™

⚠ CAUTION!

- Do not open:
  Contents may irritate eyes or skin. Keep out of reach of children.
- First aid:
  Contains potassium permanganate. In case of contact with eyes or skin, rinse immediately with water.
- Do not eat:
  If swallowed, seek medical treatment immediately.

1. Remove the plastic wrapper. Insert unopened packet into the holder in the crisper drawer.
2. For optimal results, replace the refill every 12 months along with your air filter.

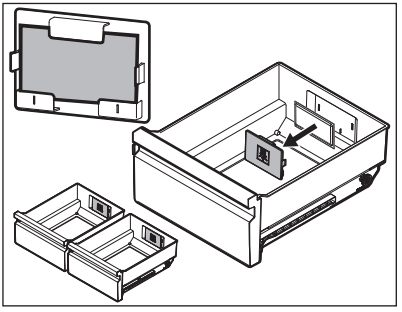

15. CARE AND CLEANING

15.1 Protecting your investment

Keeping your appliance clean maintains its appearance and prevents odor build-up. Wipe up any spills immediately and clean the freezer and fresh food compartments at least twice a year. When cleaning, take the following precautions:

- Never use metallic scouring pads, brushes, abrasive cleaners, or strong alkaline solutions on any surface.
- Never use chloride or cleaners with bleach to clean stainless steel.
- Do not wash any removable parts in a dishwasher.
- Always unplug the electrical power cord from the wall outlet before cleaning.
- Do not remove the serial plate. Removal of your serial plate voids your warranty.
- Remove adhesive labels by hand. Do not use razor blades or other sharp instruments which can scratch the appliance surface.
- Before moving your appliance, raise the anti-tip brackets so the rollers will work correctly. This will prevent the floor from being damaged.

Do not use abrasive cleaners such as window sprays, scouring cleansers, brushes, flammable fluids, cleaning waxes, concentrated detergents, bleaches or cleansers containing petroleum products on plastic parts, interior doors, gaskets or cabinet liners. Do not use paper towels, metallic scouring pads, or other abrasive cleaning materials or strong alkaline solutions.

Refer to the guide below for more details on caring and cleaning specific areas of your appliance.

NOTE

If you set your temperature controls to turn off cooling, power to lights and other electrical components will continue until you unplug the power cord from the wall outlet.

⚠ CAUTION!

Pull the appliance straight out to move it. Shifting it from side to side may damage flooring.
Be careful not to move the appliance beyond the plumbing connections.

⚠ CAUTION!

Damp objects stick to cold metal surfaces. Do not touch refrigerated surfaces with wet or damp hands.

IMPORTANT

If you store or move your appliance in freezing temperatures, be sure to completely drain the water supply system. Failure to do so could result in water leaks when the appliance is put back into service. Contact a service representative to perform this operation.

15.2 Vacation and moving tips

Occasion	Tips
Short vacations	• Leave the appliance operating during vacations of three weeks or less. • Use all perishable items from the appliance compartment. • Turn automatic ice maker off and empty ice bucket, even if you will only be gone a few days.

Occasion	Tips
Long vacations	• Remove all food and ice if you will be gone one month or more. • Turn the cooling system off (refer to Controls and Settings for location of On/Off button) and disconnect power cord. • Turn water supply valve to closed position. • Clean interior thoroughly. • Leave both doors open to prevent odors and mold build-up. Block doors open if necessary.
Moving	• Unplug the appliance • Remove all food and ice. • Recommend use of a handcart, load from the side. • Adjust rollers all the way up to protect them during sliding or moving. • Pad cabinet to avoid scratching surface.

15.3 Care & Cleaning Tips

Part	What to use	Tips and precautions
Interior and door liners	• Soap and water • Baking soda and water	Use 2 tablespoons of baking soda in 1 quart of warm water. Be sure to wring excess water out of sponge or cloth before cleaning around controls, light bulb or any electrical part.
Door gaskets	Soap and water	Wipe gaskets with a clean soft cloth.
Drawers and bins	Soap and water	Use a soft cloth to clean drawer runners and tracks.
Glass shelves	• Soap and water • Glass cleaner • Mild liquid sprays	Allow glass to warm to room temperature before immersing in warm water.
Exterior and handles	• Soap and water • Non abrasive glass cleaner	Do not use commercial household cleaners containing ammonia, bleach or alcohol to clean handles. Use a soft cloth to clean smooth handles. Do not use a dry cloth to clean smooth doors.
Exterior and handles (Stainless steel models only)	• Soap and water • Stainless steel cleaners	Never use chloride or cleaners with bleach to clean stainless steel. Clean stainless steel front and handles with non-abrasive soapy water and a dishcloth. Rinse with clean water and a soft cloth. Use a non-abrasive stainless steel cleaner. These cleaners can be purchased at most home improvement or major department stores. Always follow manufacturer's instructions. Do not use household cleaners containing ammonia or bleach. Always clean, wipe and dry with the grain to prevent scratching. Wash the rest of the cabinet with warm water and mild liquid detergent. Rinse well, and wipe dry with a clean soft cloth.

16. TROUBLESHOOTING

Let us help you troubleshoot your concern! This section will help you with common issues. If you need us, visit our website, chat with an agent, or call us. We may be able to help you avoid a service visit. If you do need service, we can get that started for you!
Visit Frigidaire.com or call toll-free 1-800-374-4432.

Automatic Ice Maker

Concern	Potential Cause	Common solution
Ice maker is not making any ice.	Ice maker is turned off.	Turn on ice maker. For the refrigerator ice maker, press and hold the Ice Maker On/Off button on your display. For the freezer ice maker, turn the ice maker on by pressing the toggle switch on the (-) side.
	Refrigerator is not connected to water line or water valve is not open.	Connect the unit to the household water supply and ensure the water valve is open.
	The water supply line is kinked.	Ensure that the supply line does not kink when the refrigerator is pushed into place against the wall.
	The water filter is not seated properly.	Remove and re-install the water filter. Be sure to seat it fully into the locked position.
	The water filter may be clogged with foreign material.	If water dispenses slowly or not at all, or if the filter is 6 months old or older, it should be replaced.

Concern	Potential Cause	Common solution
Ice maker is not making enough ice.	Ice maker is producing less ice than you expect.	• In a standard depth model, the refrigerator ice maker should produce 3.0 to 3.4 lbs of ice per 24 hours and will hold around 5 lbs of ice. • In a counter depth model, the refrigerator ice maker should produce 2.7 to 3.2 lbs of ice per 24 hours and will hold around 3.7 lbs of ice.
	The water filter may be clogged with foreign material.	If water dispenses slower than normal, or if the filter is six months old or older, it should be replaced.
	Saddle valve on cold water pipe is clogged or restricted by foreign material.	Ensure that the supply line does not kink when the refrigerator is pushed into place against the wall.
	Heavy traffic, opening or closing of the doors excessively.	Turn off household water line valve. Remove valve. Clean valve. Replace valve if necessary.
	Freezer control is set too warm (freezer ice maker).	Set freezer control to colder setting to improve performance of the ice maker (freezer ice maker). Allow 24 hours for temperature to stabilize.
	Water pressure is extremely low. Cut-off and cut-on pressures are too low (well systems only).	Have someone turn up the cut-off and cut-on pressure on the water pump system (well systems only).
	Reverse osmosis system is in regenerative phase.	It is normal for a reverse osmosis system to be below 20 psi during the regenerative phase.
Freezer ice maker will not stop making ice (some models).	Ice maker bail arm is being held down by a package in the freezer that has fallen against ice maker.	Move any item or frozen ice cubes that may block the bail arm from being in the off or upward position.
	Ice cubes are located in once spot inside the freezer ice bin.	Periodically move ice cubes around the ice bin so that ice maker will continue to make ice.

Concern	Potential Cause	Common solution
Ice cubes are freezing together.	Ice cubes are not being used frequently enough or interruption of power for prolonged time.	Remove ice container and discard ice. The ice maker will produce fresh supply. Ice should be used at least twice weekly to keep the cubes separated.
	Ice cubes are hollow (shells of ice with water inside). The hollow cubes break open in the bin and leak their water onto existing ice, which causes it to freeze together.	• This generally occurs when the ice maker does not get enough water. This is usually the result of a clogged water filter or restricted water supply. • Replace the water filter and if the condition still occurs check for a clogged saddle valve, water valve not turned on all the way or kinked water supply line.

Ice and water dispenser

Concern	Potential cause	Common solution
Dispenser does not dispense ice.	There is no ice in the bin to be dispensed.	See the section above: Ice maker is not making any ice.
	The refrigerator doors are not completely closed.	Completely close the refrigerator doors.
	Dispenser paddle has been pressed too long and the dispenser motor has overheated.	The motor overload protector will reset in about 3 minutes, and then ice can be dispensed.
	Not dispensing ice regularly may melt and re-freeze ice causing ice clumping. Dispensing clumps could damage the ice bucket.	Empty the ice bucket monthly or regularly dispense ice. For longer periods of time (vacation or vacant homes) turn off the ice maker. See tips in Automatic Ice and Water Dispenser.
Ice dispenser is jammed.	Ice has melted and frozen around auger due to infrequent use, temperature fluctuations, and/or power outages.	Remove ice container, thaw, and empty the contents. Clean container, wipe dry, and replace in proper position. When new ice is made, dispenser should operate. See tips on cleaning in Automatic Ice and Water Dispenser.
	Ice cubes are jammed between ice maker and back of ice container.	Remove ice cubes that are jamming the dispenser.

Concern	Potential cause	Common solution
Dispenser does not dispense water.	Water filter not seated properly.	Remove and reinstall the water filter. For PurePour™, be sure to push the filter in all the way until it clicks into place and is secured inside of the water filter housing.
	Water filter is clogged.	Replace filter cartridge. Be sure to push filter all the way in until it clicks into place and is secured inside of the water filter housing.
	Household water line valve is not open.	Open household water line valve.
Water not cold enough.	The water dispensing system is not designed to chill water.	Add ice to cup or container before dispensing water.
Water has an odd taste and/or odor.	Water has not been dispensed for an extended period of time.	Draw and discard 10-12 glasses of water to freshen the supply.
	The appliance not properly connected to cold water line.	Connect unit to cold water line that supplies water to the kitchen faucet.

Opening/Closing of Doors/Drawers

Concern	Potential cause	Common solution
Door(s) does not close.	Door was closed too hard, causing other door to open slightly.	Close both doors gently.
	Refrigerator is not level. It rocks on the floor when moved slightly.	Ensure floor is level and solid, and can adequately support the refrigerator. Contact a carpenter to correct a sagging or sloping floor.
	Refrigerator is touching a wall or cabinet.	Ensure floor is level and solid, and can adequately support the refrigerator. Contact a carpenter to correct a sagging or sloping floor.
Drawers are difficult to move.	Food is touching shelf on top of drawer.	Remove top layer of items in drawer.
	Track that drawers slide on is dirty.	• Ensure drawer is properly installed on track. • Clean drawer, rollers, and track. Refer to Care and Cleaning.

Running of appliance

Concern	Potential cause	Common solution
Compressor does not run.	Freezer control is set to off.	Set freezer control.
	Refrigerator is in defrost cycle.	This is normal for a fully automatic defrost refrigerator. The defrost cycle occurs periodically, lasting about 30 minutes.
	Plug at electrical outlet is disconnected.	Ensure plug is tightly pushed into outlet.
	House fuse blown or tripped circuit breaker.	Check/replace fuse with a 15 amp time-delay fuse. Reset circuit breaker.
	Power outage.	Check house lights. Call local electric company.
Refrigerator seems to run too much or too long.	Your variable speed compressor is designed to run 100% of the time except during the defrost cycle. At times it will run faster, such as after a defrost cycle.	It is normal for the compressor to run continuously except during defrost mode.
Appliance seems to run continuously.	The appliances are designed with a variable speed compressor to be more energy efficient than previous models. This means your compressor reacts quickly to temperature fluctuations and circulates cold air based off your use and room temperature.	This is normal for a variable speed compressor refrigerator; however, if you have concerns, call toll-free 1-800-374-4432 or visit Frigidaire.com.

Digital temperature display

Concern	Potential cause	Common solution
Digital temperature displays an error.	Electronic control system has detected a performance problem.	Call your Frigidaire service representative, who can interpret any messages or number codes flashing on the digital displays.

Water/Moisture/Frost Inside Refrigerator

Concern	Potential cause	Common solution
Moisture collects on inside of refrigerator walls.	Weather is hot and humid.	The rate of frost buildup and internal sweating increases.
	Flipper mullion	Adjust flipper mullion. Refer to Flipper Mullion in Installation.
	Door is slightly open.	See the Opening/Closing of Doors/Drawers section above.
Water collects on bottom side of drawer cover.	Vegetables contain and give off moisture.	• It is not unusual to have moisture on the bottom side of the cover. • Move humidity control (some models) to lower setting.

Concern	Potential cause	Common solution
Water collects in bottom of drawer.	Washed vegetables and fruit drain while in the drawer.	Water collecting in bottom of drawer is normal. Dry items before putting them in the drawer or store produce in tightly sealed bags to help reduce condensation inside of the drawer.

Water/Moisture/Frost Outside Refrigerator

Concern	Potential cause	Common solution
Moisture collects on outside of refrigerator or between doors.	Weather is humid.	This is normal in humid weather. When humidity is lower, the moisture should disappear.
	Door is slightly open, causing cold air from inside refrigerator to meet warm air from outside.	See the Opening/Closing of Doors/Drawers section above.

Food in Fresh food comartment

Concern	Potential cause	Common solution
Food is freezing.	Temperature setting is too low.	Move the setting to a higher degree.
	Temperature sensor is covered by food (right side of fresh food area).	Allow space for air flow to the sensor.
	Food is covering the air ports.	Allow space between the air ports and the food.

17. LIMITED WARRANTY

Your appliance is covered by a one year limited warranty. For one year from your original date of delivery, Electrolux will pay all costs for repairing or replacing any parts of this appliance that prove to be defective in materials or workmanship when such appliance is installed, used and maintained in accordance with the provided instructions. If your product cannot be repaired or replaced, you will be refunded the purchase price less any depreciation, taxes or other costs.

Exclusions

This warranty does not cover the following:

1. Products with original serial numbers that have been removed, altered or cannot be readily determined.
2. Product that has been transferred from its original owner to another party or removed outside the USA, Puerto Rico, or Canada.
3. Rust on the interior or exterior of the unit.
4. Products purchased “as-is” are not covered by this warranty.
5. Food loss due to any refrigerator or freezer failures.
6. Products used in a commercial setting.
7. Service calls which do not involve malfunction or defects in materials or workmanship, or for appliances not in ordinary household use or used other than in accordance with the provided instructions.
8. Service calls to correct the installation of your appliance or to instruct you how to use your appliance.
9. Expenses for making the appliance accessible for servicing, such as removal of trim, cupboards, shelves, etc., which are not a part of the appliance when it is shipped from the factory.

10. Service calls to repair or replace appliance light bulbs, air filters, water filters, other consumables, or knobs, handles, or other cosmetic parts.
11. Surcharges including, but not limited to, any after hour, weekend, or holiday service calls, tolls, ferry trip charges, or mileage expense for service calls to remote areas, including the state of Alaska.
12. Damages to the finish of appliance or home incurred during transportation or installation, including but not limited to floors, cabinets, walls, etc.
13. Damages caused by: services performed by unauthorized service companies; use of parts other than genuine Electrolux parts or parts obtained from persons other than authorized service companies; or external causes such as abuse, misuse, inadequate power supply, accidents, fires, or acts of God.

DISCLAIMER OF IMPLIED WARRANTIES; LIMITATION OF REMEDIES

CUSTOMER'S SOLE AND EXCLUSIVE REMEDY UNDER THIS LIMITED WARRANTY SHALL BE PRODUCT REPAIR OR REPLACEMENT AS PROVIDED HEREIN. CLAIMS BASED ON IMPLIED WARRANTIES, INCLUDING WARRANTIES OF MERCHANTABILITY OR FITNESS FOR A PARTICULAR PURPOSE, ARE LIMITED TO ONE YEAR OR THE SHORTEST PERIOD ALLOWED BY LAW, BUT NOT LESS THAN ONE YEAR. ELECTROLUX SHALL NOT BE LIABLE FOR CONSEQUENTIAL OR INCIDENTAL DAMAGES SUCH AS PROPERTY DAMAGE AND INCIDENTAL EXPENSES RESULTING FROM ANY BREACH OF THIS WRITTEN LIMITED WARRANTY OR ANY IMPLIED WARRANTY. SOME STATES AND PROVINCES DO NOT ALLOW THE EXCLUSION OR LIMITATION OF INCIDENTAL OR CONSEQUENTIAL DAMAGES, OR LIMITATIONS ON THE DURATION OF IMPLIED WARRANTIES, SO THESE LIMITATIONS OR EXCLUSIONS MAY NOT APPLY TO YOU. THIS WRITTEN WARRANTY GIVES YOU SPECIFIC LEGAL RIGHTS. YOU MAY ALSO HAVE OTHER RIGHTS THAT VARY FROM STATE TO STATE.

If You Need Service

You must provide the appliance serial number and your receipt, delivery slip, or some other appropriate payment record to establish the warranty period should service be required. If service is performed, it is in your best interest to obtain and keep all receipts. Service under this warranty must be obtained by contacting Electrolux at the addresses or phone numbers below.

This warranty only applies in the USA, Puerto Rico and Canada. In the USA and Puerto Rico, your appliance is warranted by Electrolux Consumer Products, Inc. In Canada, your appliance is warranted by Electrolux Canada Corp. Electrolux authorizes no person to change or add to any obligations under this warranty. Obligations for service and parts under this warranty must be performed by Electrolux or an authorized service company. Product features or specifications as described or illustrated are subject to change without notice.

USA

1-800-374-4432

Electrolux Consumer Products, Inc.

10200 David Taylor Drive

Charlotte, NC 28262

Canada

1-800-265-8352

Electrolux Canada Corp.

5855 Terry Fox Way

Mississauga, Ontario, Canada L5V 3E4

18. QUEBEC RIGHT TO REPAIR

Though Frigidaire makes every effort to make replacement parts, repair services and information necessary to maintain or repair our products available to consumers, parts, service and information are not guaranteed, pursuant to section 39 of the Consumer Protection Act, CQLR, c. P-40.1 and sections 79.18 to 79.20 of the

Regulation respecting the application of the Consumer Protection Act, CQLR, c P-40.1, r. 3. If you need replacement parts, you may call us at 1 (800) 265-8352 for service in French or English, or purchase online at **Frigidaire Parts | Shop Frigidaire Replacement Parts & Accessories - Frigidaire Appliance Parts.**

You may book repair services online at https://www.frigidaire.ca/RIGHT-TO-REPAIR/. Alternatively, our resource library is available at **Resource Library | Frigidaire** to help you diagnose and resolve issues which may arise during the lifetime of your appliance.

Though most parts are available for purchase, subject to short-term availability constraints, the following appliances and parts are not serviceable.

Legend

Availability of replacement parts, repair services, and information for maintenance or repair.	
⚠	Partially Available
☒	Not Available
✓	Available

Refrigerators	⚠	Cabinet, 14cu ft and less no sealed system parts
Freezer	⚠	9 cu. ft and less no sealed system parts.
Beverage Centers	⚠	Only cosmetic parts available

frigidaire.com

A31786301 (April 2026)