User Guide

SUMMARY

This guide provides technical specifications and information about monitor features, setting up the monitor, and using the monitor.

Legal information

© Copyright 2026 HP Development Company, L.P.

Microsoft and Windows are either registered trademarks or trademarks of Microsoft Corporation in the United States and/or other countries. USB Type-C and USB-C are registered trademarks of USB Implementers Forum. VESA, DisplayPort and the DisplayPort logo are trademarks owned by the Video Electronics Standards Association (VESA) in the United States and other countries.

The information contained herein is subject to change without notice. The only warranties for HP products and services are set forth in the express warranty statements accompanying such products and services. Nothing herein should be construed as constituting an additional warranty. HP shall not be liable for technical or editorial errors or omissions contained herein.

Product notice

This guide describes features that are common to most models. Some features may not be available on your product. To access the latest user guide, go to http://www.hp.com/support, and follow the instructions to find your product. Then select **Setup & User Guides**.

First Edition: September 2026

Document Part Number: Q22539-001

Table of contents

1 About this guide 1

2 Getting started 2

Important safety information 2

More HP resources 2

Preparing to call technical support 3

Getting to know your monitor 3

Features 3

Rear components, flat-screen monitor 5

Rear components, curved-screen monitor 6

Locating the serial number and product number 7

Setting up the monitor 8

Attaching the monitor stand (flat-screen monitor) 8

Attaching the monitor stand (curved-screen monitor) 10

Mounting the monitor head 12

Removing the monitor stand (flat-screen monitor) 12

Removing the monitor stand (curved-screen monitor) 13

Attaching the monitor head to a mounting device (curved-screen model only) 14

Connecting the cables 14

Adjusting the monitor (flat-screen monitor) 18

Adjusting the monitor (curved-screen monitor) 20

Installing a security cable 21

Turning on the monitor 22

HP watermark and image retention policy 23

Connecting an HP notebook or desktop (curved model only) 24

3 Using the monitor 25

Downloading HP Display Center 25

Downloading software and utilities 25

The Information (INF) file 25

The Image Color Matching (ICM) file 26

Using the OSD menu 26

Using the Joystick buttons (flat screen monitor) 27

Using the Joystick buttons (curved screen monitor) 28

Reassigning the OSD menu options 29

Display mode status 29

Changing the power mode setting 30

Using Auto-Sleep Mode 30

Using low blue light mode 30

Connecting a second computer to the monitor using the KVM function 31
Toggle in KVM Mode 31
KVM controls 31
Connection priorities in KVM mode 31
Text to Speech (select products/regions only) 32

4 Support and troubleshooting 33

Using the self-test function 33
Internal test pattern generator 34
Solving common issues 35
Button lockouts 36

5 Maintaining the monitor 37

Maintenance guidelines 37
Cleaning the monitor 37
Shipping the monitor 38

Appendix A Technical specifications 39

68.47 cm (27 in) model specifications (QHD) 39
86.42 cm (34 in) model specifications (WQHD) 40
Preset display resolutions 40
68.47 cm (27.0 in) model (flat) 40
88.61 cm (34.0 in) model (curved) 41
High-definition video formats 42
Energy saver feature 43

Appendix B Accessibility 44

HP and accessibility 44
Finding the technology tools you need 44
The HP commitment 44
International Association of Accessibility Professionals (IAAP) 45
Finding the best assistive technology 45
Assessing your needs 45
Accessibility for HP products 45
Monitor accessibility features (select products/regions only) 46
Built-in accessibility features 46
What is Accessibility Mode? 46
How do you turn Accessibility Mode on or off? 46
Standards and legislation 47
Standards 47
Mandate 376 – EN 301 549 47
Web Content Accessibility Guidelines (WCAG) 48
Legislation and regulations 48
Useful accessibility resources and links 48
Organizations 48

Educational institutions 49
Other disability resources 49
HP links 49
Contacting support 49
Index **51**

1 About this guide

This guide provides technical specifications and information about monitor features, setting up the monitor, and using the software. Depending on the model, your monitor may not have all the features included in this guide.

WARNING! Indicates a hazardous situation that, if not avoided, **could** result in serious injury or death.

CAUTION: Indicates a hazardous situation that, if not avoided, **could** result in minor or moderate injury.

IMPORTANT: Indicates information considered important but not hazard-related (for example, messages related to property damage). Warns the user that failure to follow a procedure exactly as described could result in loss of data or in damage to hardware or software. Also contains essential information to explain a concept or to complete a task.

NOTE: Contains additional information to emphasize or supplement important points of the main text.

TIP: Provides helpful hints for completing a task.

HDMI® HIGH-DEFINITION MULTIMEDIA INTERFACE

This product incorporates HDMI® technology.

2 Getting started

Read this chapter to learn about safety information and where to find additional HP resources.

Important safety information

An AC adapter and power cord might be included with the monitor. If you use another cord, use only a power source and connection appropriate for this monitor.

For information about the correct power cord set to use with the monitor, see the *Product Notices* at HP Regulatory, Safety, Compliance, and Warranty Information.

⚠ **WARNING!** To reduce the risk of electric shock or damage to the equipment:

- Plug the power cord into an AC outlet that is easily accessible at all times.
- If the power cord has a three-pin attachment plug, plug the cord into a grounded (earthed) three-pin outlet.
- Disconnect power from the monitor by unplugging the power cord from the AC outlet. When unplugging the power cord from the AC outlet, grasp the cord by the plug.

For your safety, do not place anything on power cords or cables. Take care to route all cords and cables connected to the monitor so that they cannot be stepped on, pulled, grabbed, or tripped over.

IMPORTANT: For the protection of the monitor and the computer, connect all power cords for the computer and its peripheral devices (such as a monitor, printer, scanner) to a surge protection device such as a power strip or uninterruptible power supply (UPS). Not all power strips provide surge protection; the power strip must be specifically labeled as having this capability. Use a power strip whose manufacturer offers a damage replacement policy so that you can replace the equipment if surge protection fails.

Use the appropriate and correctly sized furniture designed to properly support your monitor.

⚠ **WARNING!** Monitors that are inappropriately situated on dressers, bookcases, shelves, desks, speakers, chests, or carts could fall over and cause personal injury.

⚠ **WARNING!** **Stability hazard:** The device might fall, causing serious personal injury or death. To prevent injury, securely attach the monitor to the floor or wall in accordance with the installation instructions.

⚠ **WARNING!** This equipment is not suitable for use in locations where children are likely to be present.

NOTE: This product is suitable for entertainment purposes. Consider placing the monitor in a controlled luminous environment to avoid interference from surrounding light and bright surfaces that might cause disturbing reflections from the screen.

More HP resources

Use this table to locate resources that provide product details, how-to information, and more.

Table 2-1 Additional information

Resource	Contents
Setup Instructions	Overview of monitor setup and features
HP support	For HP support or to resolve a hardware or software problem, perform one of these tasks: • Go to http://www.hp.com/support, and follow the instructions to find your product. • Select the **Search** icon in the taskbar, type `support` in the search box, and then select **HP Support Assistant**. • Select the question mark icon in the taskbar.

NOTE: Contact customer support to replace the power cord, the AC adapter (select products only), or any other cables that shipped with your monitor.

Preparing to call technical support

Use this information if you have to troubleshoot an issue.

If you cannot solve a problem using Support and troubleshooting on page 33, a call to technical support can provide additional help. Have the following information available when you call:

- Monitor model number
- Monitor serial number
- Purchase date on invoice
- Conditions under which the problem occurred
- Error messages received
- Hardware configuration
- Name and version of the hardware and firmware that you are using

Getting to know your monitor

Your monitor has top-rated features. This section provides details about your components, where they are located, and how they work.

Features

Depending on the model, your monitor might include the following features:

Display features

- 68.47 cm (27 in) diagonal viewable screen area with 2560 × 1440 resolution, plus full-screen support for lower resolutions; includes custom scaling for maximum image size while preserving original aspect ratio (QHD model)
- 86.42 cm (34 in) diagonal viewable screen area with 3440 × 1440 resolution, plus full-screen support for lower resolutions; includes custom scaling for maximum image size while preserving original aspect ratio (WQHD model)
- True 8 bit
- 99% sRGB 1931 (QHD only)
- 85% NTSC 1931 (WQHD only)
- Wide color gamut to provide coverage of sRGB color spaces
- Nonglare panel with an LED backlight
- Ergonomic monitor setup guide via the HP Display Center software during first-time use
- Liquid crystal display (LCD) with active matrix and in-plane switching (IPS) technology (select products only)
- Wide viewing angle to allow viewing from a sitting or standing position, or moving from side to side
- Tilt, swivel, and height adjustment capabilities
- Pivot capability to rotate the monitor head from landscape to portrait orientation (select products only)
- Joystick on-screen display (OSD) buttons, three that you can reconfigure to quickly allow selection of the most commonly used operations
- OSD adjustments in several languages for easy setup and screen optimization
- Joystick OSD navigation
- Energy saver feature to meet requirements for reduced power consumption
- HP Eye Ease (certified TÜV Rheinland Low Blue Light Hardware Solution with 120 Hz maximum refresh rate)
- Compatible with displays software including:
  - HP Display Center
  - HP Client Management Script Library (CMSL)
- Secure firmware updates with HP Display Center
- Security cable slot on the rear of the monitor for an optional security cable
- Cable management feature for placement of cables and cords
- Plug and play capability, if supported by your operating system

Connectors

- DisplayPort™ video input
- High-Definition Multimedia Interface (HDMI) video input
- 3.5 mm headphone jack (curved model only)
- USB Type-C® port (cable included) (curved model only)
- USB hub with one USB Type-B port and one USB Type-C port that connects to the computer (upstream) and three USB ports that connect to USB devices (downstream) (curved model only)

Monitor stand

- Removable stand for flexible monitor head mounting solutions
- 100 mm × 100 mm VESA® mounting capability for attaching the monitor to a wall mount device or swing arm

NOTE: For safety and regulatory information, see the *Product Notices* at HP Regulatory, Safety, Compliance, and Warranty Information. To access the latest user guide, go to http://www.hp.com/support, and follow the instructions to find your product. Then select **Setup & User Guides**.

Rear components, flat-screen monitor

Use these illustrations and tables to identify the components on the rear of the monitor.

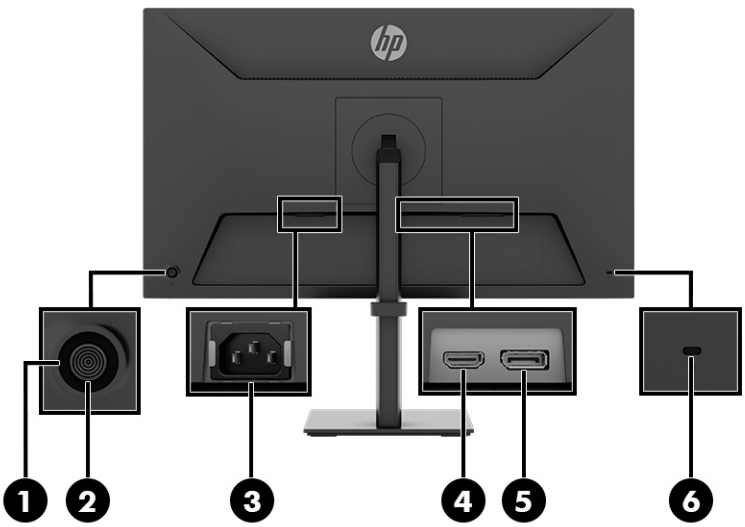

Table 2-2 Rear components and their descriptions

	Component	Description
(1)	Joystick	Press to open the OSD settings.
(2)	Power button	Turns the monitor on or off.
(3)	Power connector	Connects a power cord.

Table 2-2 Rear components and their descriptions (continued)

	Component	Description
(4)	HDMI port	Connects the HDMI cable to a source device such as a computer.
(5)	DisplayPort connector	Connects a DisplayPort cable to a source device such as a computer.
(6)	Security cable slot	Connects an optional security cable.

Rear components, curved-screen monitor

Use these illustrations and tables to identify the components on the rear of the monitors.

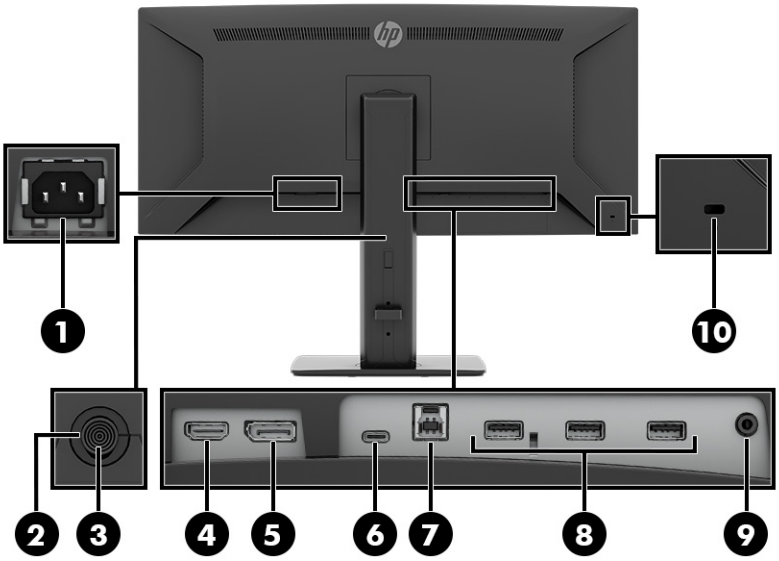

Table 2-3 Rear components and their descriptions

	Component	Description
(1)	Power connector	Connects a power cord.
(2)	Joystick	Press to open the OSD settings.
(3)	Power button	Turns the monitor on or off.
(4)	HDMI port	Connects the HDMI cable to a source device such as a computer.
(5)	DisplayPort connector	Connects a DisplayPort cable to a source device such as a computer.
(6)	USB Type-C port (upstream)	Connects a USB Type-C cable to a source device, such as a computer. This USB Type-C port can function as a DisplayPort audio/video input or as a USB 3.0 connection. The USB Type-C port offers a faster transfer rate, and the alternate mode with DP1.2 supports the maximum resolution of 3440 × 1440 @ 120 Hz (WQHD model). It can also be used to deliver up to 90 W of power to a device. Power delivery outputs are 20 V/4.5 A, 15 V/5 A, 12 V/5 A, 9 V/3 A, 5 V/3 A. Connecting a USB Type-C cable from a source device to this port on the monitor enables USB ports on the monitor.

Table 2-3 Rear components and their descriptions (continued)

	Component	Description
(7)	USB Type-B upstream port	Connects a USB Type-B to USB Type-A cable to a source device, such as a computer (select products only) to enable the USB hub function. Connecting a USB Type-B cable from a source device to this port on the monitor enables USB ports on the monitor.
(8)	USB ports (3)	Connect a USB cable to a peripheral device, such as a keyboard, mouse, or USB hard drive.
(9)	Audio-out (headphone) jack	Connects optional powered stereo speakers, headphones, earbuds, or a television audio cable. **WARNING!** To reduce the risk of personal injury, adjust the volume before putting on headphones, earbuds, or a headset. For additional safety information, see the *Regulatory, Safety, and Environmental Notices*. To access this guide: • Select the **Search** icon in the taskbar, type `HP Documentation` in the search box, and then select **HP Documentation**. **NOTE:** When a device is connected to the jack, the computer speakers are disabled.
(10)	Security cable slot	Connects an optional security cable.

Locating the serial number and product number

Depending on the product, the serial number and product model number are located on a label on the rear of the monitor. You might need these numbers when you contact HP for support.

NOTE: Refer to the illustration that best matches your monitor.

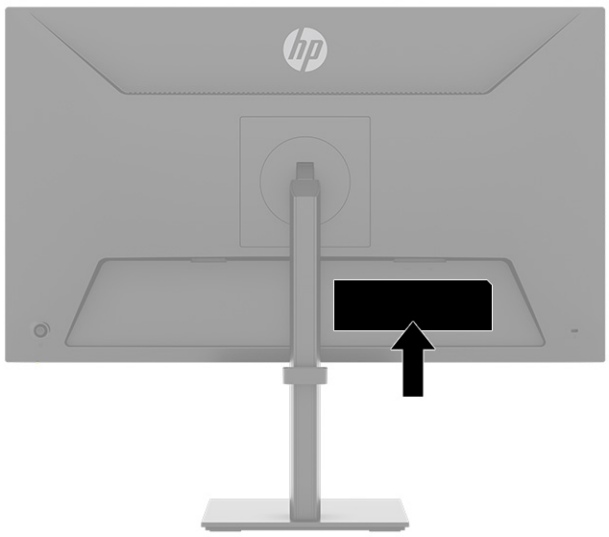

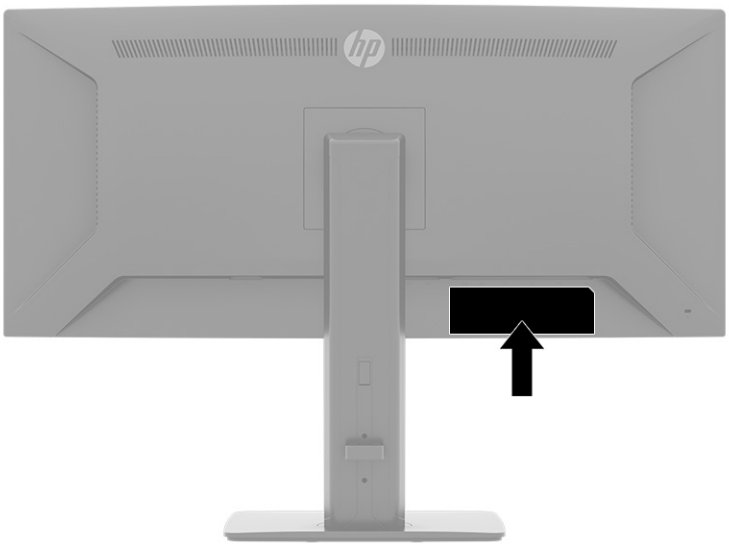

Setting up the monitor

This section describes attaching the monitor stand or wall mount and the options for connecting your monitor to a PC, notebook, gaming console, or similar device.

WARNING! To reduce the risk of serious injury, read the *Safety & Comfort Guide*. It describes proper workstation setup and proper posture, health, and work habits for computer users. The *Safety & Comfort Guide* also provides important electrical and mechanical safety information. The *Safety & Comfort Guide* is available on the web at http://www.hp.com/ergo.

IMPORTANT: To prevent damage to the monitor, do not touch the surface of the LCD panel. Pressure on the panel can cause nonuniformity of color or disorientation of the liquid crystals. If this occurs, the screen will not recover to its normal condition.

IMPORTANT: To prevent the screen from getting scratched, defaced, or broken, and to prevent damage to the control buttons, position the monitor facedown on a flat surface covered with protective sheet foam or a nonabrasive cloth.

Attaching the monitor stand (flat-screen monitor)

Correctly attaching your monitor stand is critical for safe use. This section describes how to safely attach a stand.

TIP: Consider the placement of the monitor, because surrounding light and bright surfaces might cause interfering reflections.

NOTE: The procedures for attaching a monitor stand might be different on other models.

NOTE: Place the monitor on a soft cloth to protect the screen.

1. Remove the protective covering from the monitor.
2. Position the monitor facedown on a flat surface covered by a protective sheet made of foam or a clean, dry cloth.

3. Position the monitor stand on the mounting bracket on the rear of the monitor, and then snap the monitor stand into place.

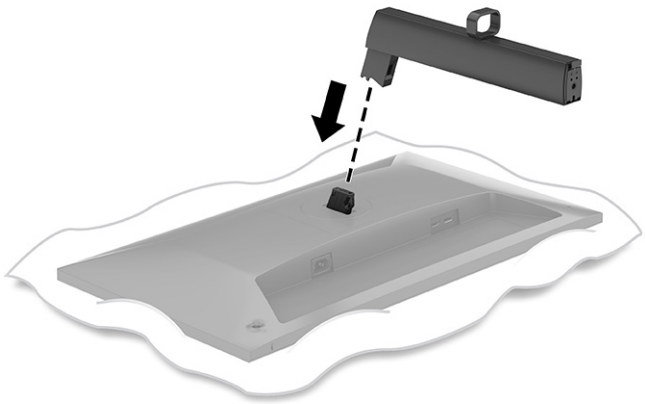

4. Attach the base to the monitor stand **(1)**, and then tighten the screw **(2)**.

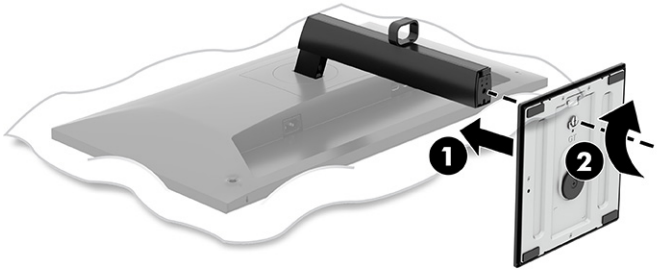

⚠ **CAUTION:** Use caution when lifting the monitor because the monitor is heavy.

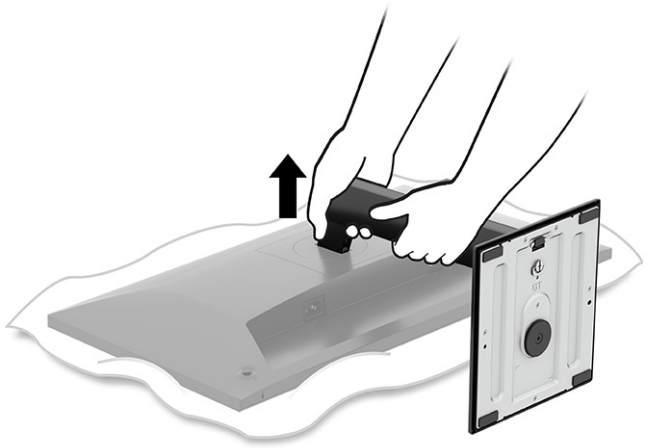

Attaching the monitor stand (curved-screen monitor)

Correctly attaching your monitor stand is critical for safe use. This section describes how to safely attach a stand.

TIP: Consider the placement of the monitor, because surrounding light and bright surfaces might cause interfering reflections.

NOTE: The procedures for attaching a monitor stand might be different on other models.

NOTE: Leave the monitor in the packing material to protect the screen.

1. Open the box so that the monitor head is facedown in the packing material.
2. Remove the protective covering from the monitor.
3. Insert the VESA plate **(1)** onto the mounting bracket on the stand arm, and then tighten the screw **(2)**.

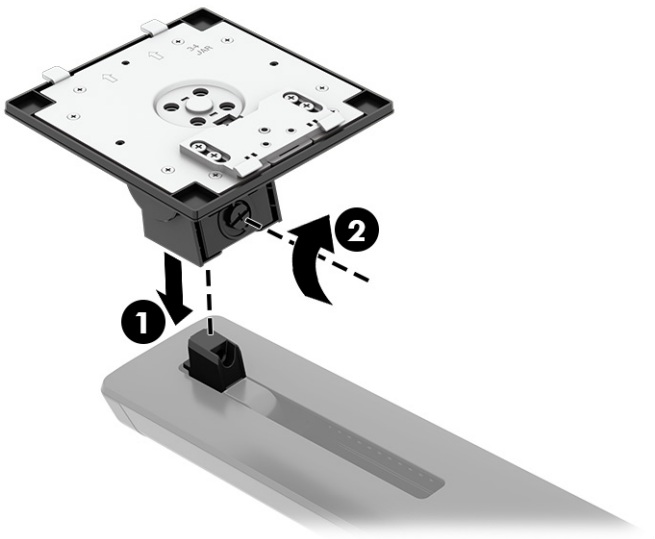

4. Position the monitor stand assembly **(1)** on the mounting plate on the rear of the monitor, and then snap the monitor stand assembly **(2)** into place.

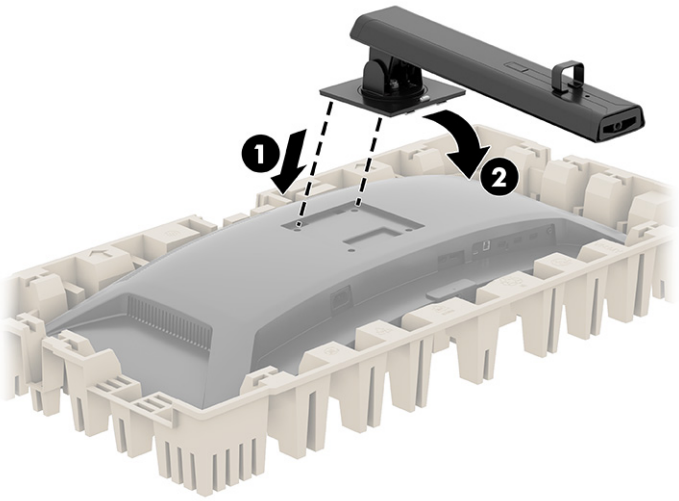

5. Attach the base to the monitor stand **(1)**, and then tighten the screw **(2)**.

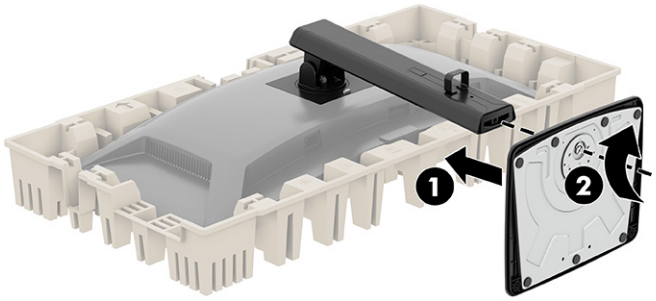

⚠ **CAUTION:** Use caution when lifting the monitor from the packing material because the monitor is very heavy.

IMPORTANT: When you are removing the curved monitor from the packing material, be sure that you place both hands on the stand to lift the monitor.

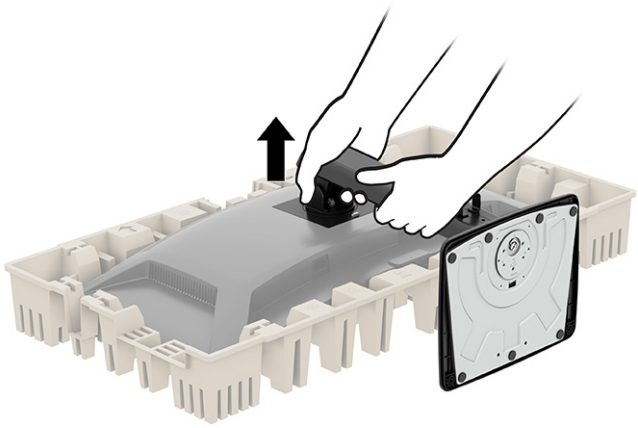

Mounting the monitor head

To attach your monitor to a wall using a swing arm or other mounting fixture, follow the steps in this section to safely and securely connect your monitor.

IMPORTANT: This monitor supports the VESA industry-standard 100 mm mounting holes. To attach a third-party mounting solution to the monitor head, use four 4 mm, 0.7 pitch, 10 mm long screws (M4 x 10L). Longer screws might damage the monitor. Be sure that the manufacturer's mounting solution is compliant with the VESA standard and is rated to support the weight of the monitor head. For best performance, use the power and video cables provided with the monitor.

NOTE: Use a UL-listed, CSA-listed, or GS-listed wall-mount bracket when you attach the monitor to a mounting fixture.

Removing the monitor stand (flat-screen monitor)

If you decide to use a wall mount instead of the monitor stand that you attached, first remove the stand.

IMPORTANT: Before you disassemble the monitor, be sure that the monitor is turned off and all cables are disconnected.

IMPORTANT: To position and stabilize the monitor, HP recommends that two people perform these procedures.

1. Disconnect and remove all cables from the monitor.
2. Position the monitor facedown on a flat surface covered by a protective sheet made of foam or a clean, dry cloth.
3. Push up the latch or screw near the bottom center of the stand where it attaches to the monitor **(1)**.

4. Remove the stand **(2)**.

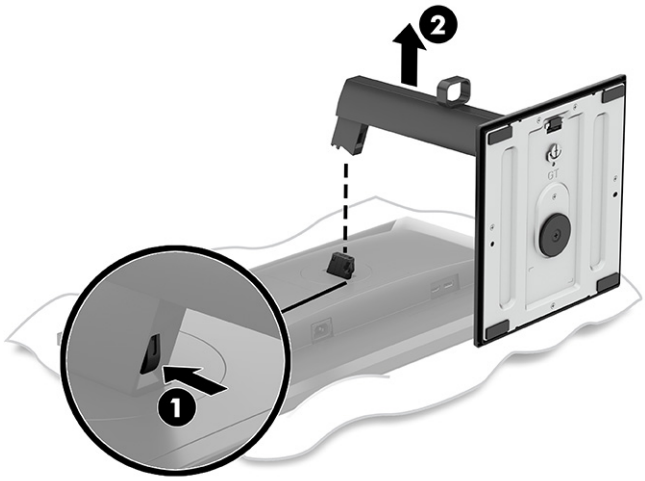

Removing the monitor stand (curved-screen monitor)

If you decide to use a wall mount instead of the monitor stand that you attached, first remove the stand.

IMPORTANT: Before you disassemble the monitor, be sure that the monitor is turned off and all cables are disconnected.

IMPORTANT: To position and stabilize the monitor, HP recommends that two people perform these procedures.

1. Disconnect and remove all cables from the monitor.
2. Position the monitor facedown in the box.
3. Push up the latch **(1)** near the bottom center of the stand where it attaches to the monitor.
4. Rotate the bottom of the stand up **(2)**, and then remove the stand **(3)**.

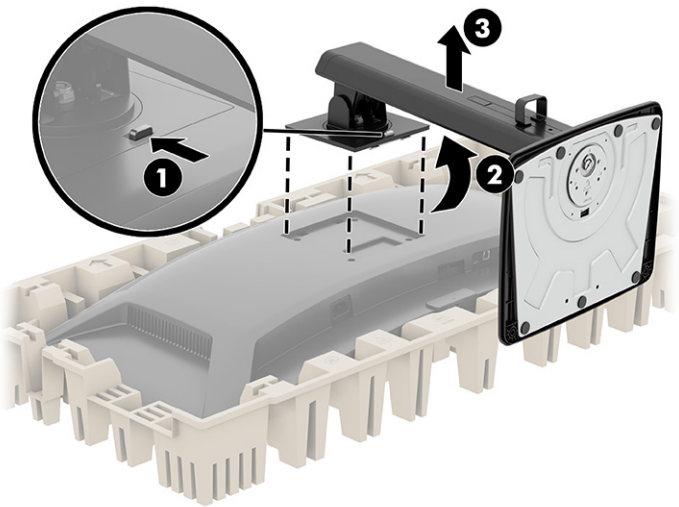

Attaching the monitor head to a mounting device (curved-screen model only)

You might need additional tools such as a screwdriver (purchased separately) when you attach a mounting device. To avoid damage to your monitor, follow these instructions.

1. Remove the monitor stand.
2. Remove the four screws from the monitor.

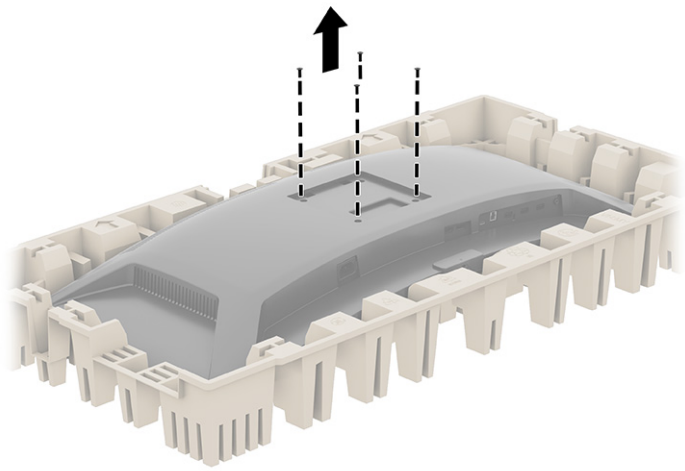

3. To attach the screen monitor head to a swing arm or other mounting device, insert four mounting screws through the holes on the mounting device into the VESA screw holes on the back of the monitor.

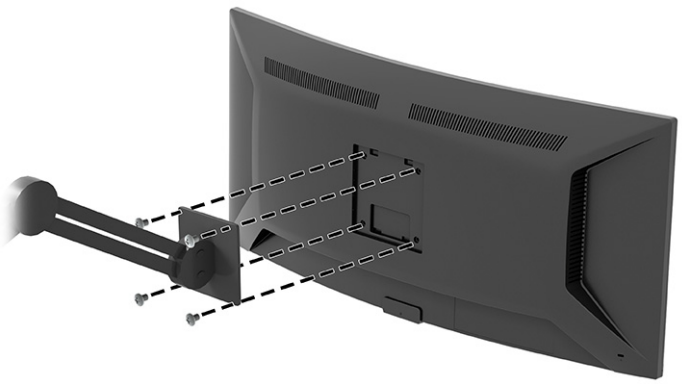

Connecting the cables

In addition to details about how to connect a cable, this section contains information about how your monitor functions when you connect certain cables.

NOTE: Depending on the model, the monitor might be capable of supporting USB Type-C, HDMI, or DisplayPort inputs. The video mode is determined by the video cable used. The monitor automatically determines which inputs have valid video signals. You can select the inputs through the OSD menu. The monitor ships with select cables. Not all cables shown in this section are included with the monitor.

1. Place the monitor in a convenient, well-ventilated location near the computer.
2. Connect one end of the power cord to the power connector on the monitor and the other end to a grounded AC outlet.

WARNING! To reduce the risk of electric shock or damage to the equipment:

- Do not disable the power cord grounding plug. The grounding plug is an important safety feature.
- Plug the power cord into a grounded (earthed) AC outlet that is easily accessible at all times.
- Disconnect power from the equipment by unplugging the power cord from the AC outlet.

For your safety, do not place anything on power cords or cables. Arrange them so that no one can accidentally step on or trip over them. Do not pull on a cord or cable. When unplugging the power cord from the AC outlet, grasp the cord by the plug.

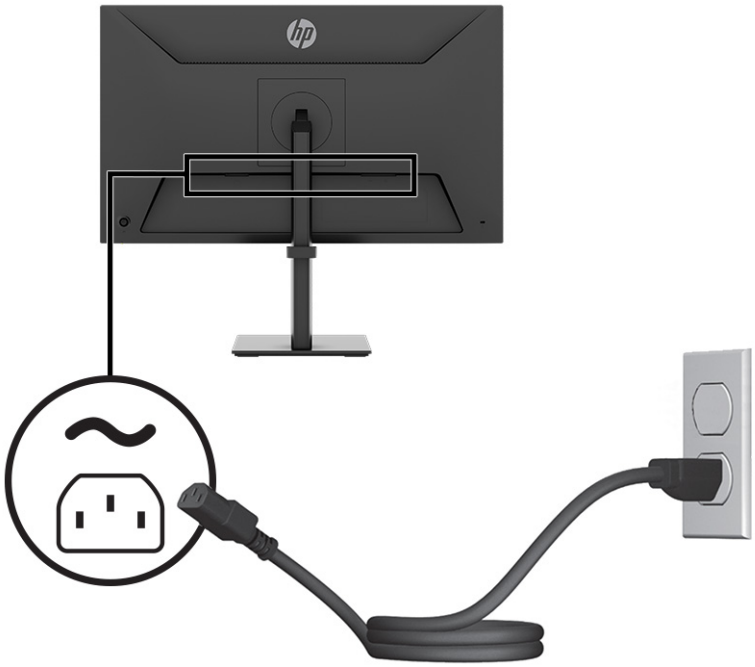

3. Connect a video cable (curved model only).

NOTE: The monitor automatically determines which inputs have valid video signals. To select any input, open the OSD menu and select **Input**.

- Connect one end of a USB Type-C cable to the USB Type-C upstream port on the rear of the monitor and the other end to the USB Type-C port on the source device. Use only the approved HP USB Type-C cable provided with the monitor.

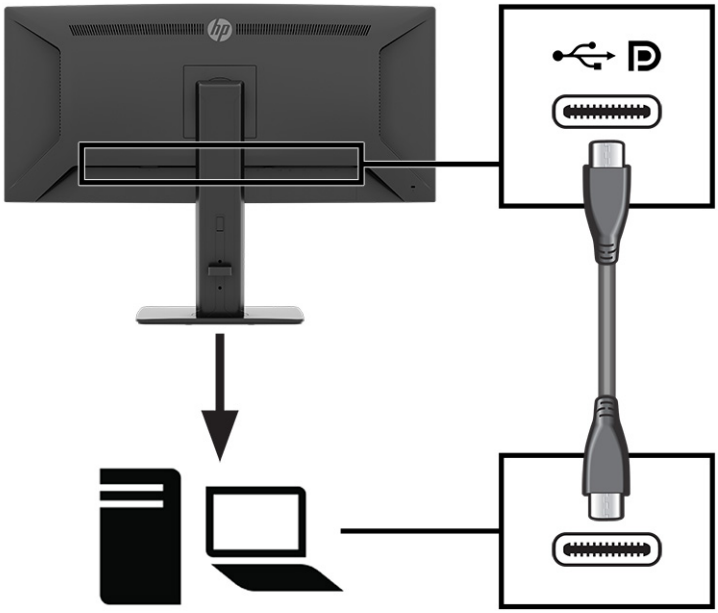

NOTE: The monitor's USB Type-C port provides data, video, and power delivery (up to 90 W).

The host device must be able to support DisplayPort Alt Mode (video, charging, and USB 3.1) over the USB Type-C connector.

To enable the USB ports, connect a USB Type-A to USB Type-B cable from the source device to the USB Type-B (upstream) port on the back of the monitor. This connection serves as a USB hub for a mouse, keyboard, external hard drive, and any other device that connects using a USB port.

- Connect one end of an HDMI cable to the HDMI port on the rear of the monitor and the other end to the HDMI port on the source device.

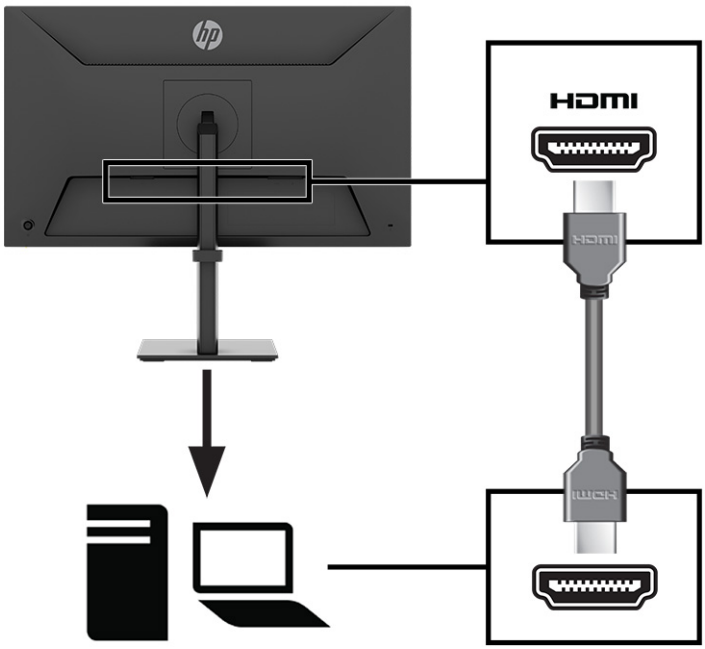

- Connect one end of a DisplayPort cable to the DisplayPort connector on the rear of the monitor and the other end to the DisplayPort connector on the source device.

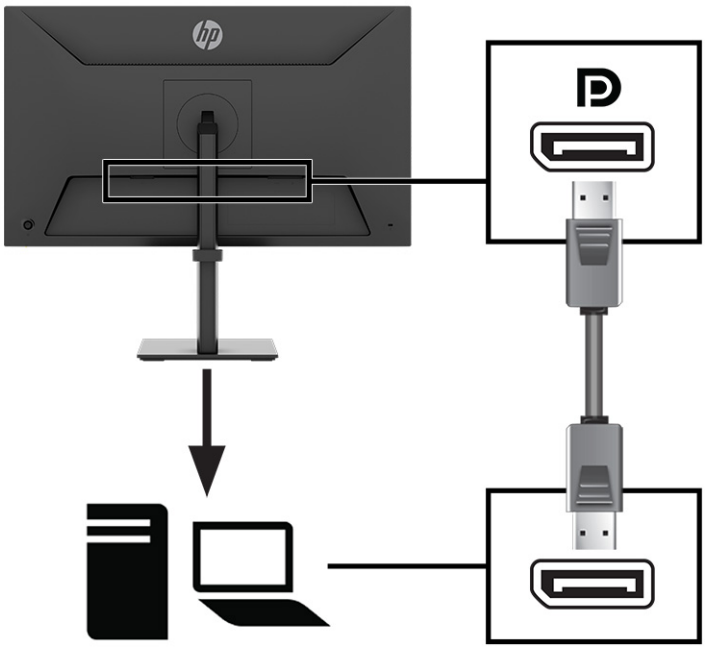

Adjusting the monitor (flat-screen monitor)

To support an ergonomic workspace, your monitor offers the adjustment options outlined in this section.

⚠ **WARNING!** To reduce the risk of serious injury, read the *Safety & Comfort Guide*. It describes proper workstation setup and proper posture, health, and work habits for computer users. The *Safety & Comfort Guide* also provides important electrical and mechanical safety information. The *Safety & Comfort Guide* is available on the web at http://www.hp.com/ergo.

1. Tilt the monitor head forward or backward to set it to a comfortable eye level.

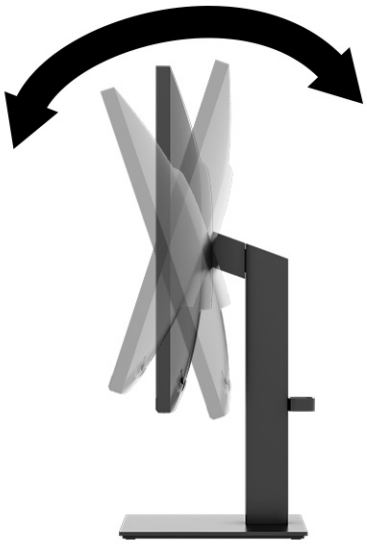

2. Adjust the monitor's height to a comfortable position for your individual workstation. The monitor's top bezel edge should not exceed a height that is parallel to your eye height. A monitor that is positioned low and reclined might be more comfortable for users with corrective lenses. Reposition your monitor as you adjust your working posture throughout the workday.

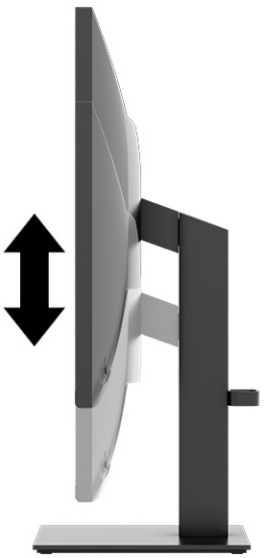

3. Swivel the monitor head to the left or right for the best viewing angle.



4. You can pivot the monitor head from landscape to portrait orientation viewing to adapt to your application.

CAUTION: HP recommends that you disconnect all cables before pivoting the monitor from landscape to portrait. If you pivot the monitor with the cables connected, you might damage the cables or the connectors.

IMPORTANT: If the monitor is not in full height and full tilt position when pivoting, the bottom-right corner of the monitor panel will come in contact with the base and potentially cause damage to the monitor.

If you are adding an optional speaker bar to the monitor, install it after pivoting the monitor. The speaker bar will come in contact with the base when the monitor pivots and potentially cause damage to the monitor or speaker bar.

- Adjust the monitor to full height position and tilt the monitor back to full tilt position **(1)**.
- Pivot the monitor clockwise 90° from landscape to portrait orientation **(2)**.

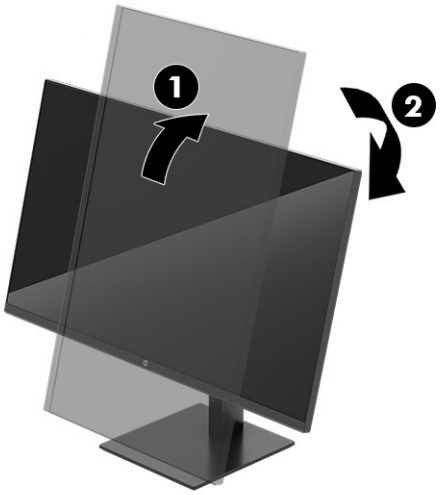

NOTE: Use the operating system's display settings to rotate the image on the screen from landscape to portrait. To rotate the OSD from landscape to portrait, open the OSD menu and select **Menu**, select **Menu Rotation**, and then select **Portrait**.

Adjusting the monitor (curved-screen monitor)

To support an ergonomic workspace, your monitor offers the adjustment options outlined in this section.

WARNING! To reduce the risk of serious injury, read the *Safety & Comfort Guide*. It describes proper workstation setup and proper posture, health, and work habits for computer users. The *Safety & Comfort Guide* also provides important electrical and mechanical safety information. The *Safety & Comfort Guide* is available on the web at http://www.hp.com/ergo.

1. Tilt the monitor head forward or backward to set it to a comfortable eye level.

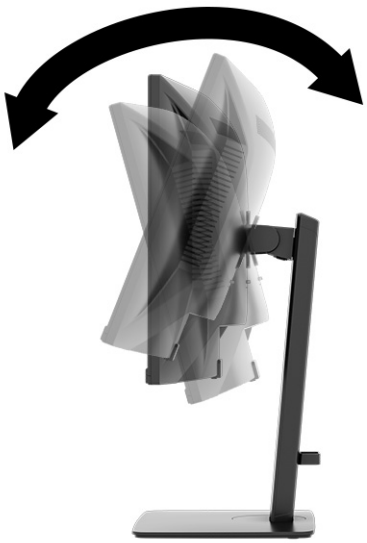

2. Adjust the monitor's height to a comfortable position for your individual workstation. The monitor's top bezel edge should not exceed a height that is parallel to your eye height. A monitor that is positioned low and reclined might be more comfortable for users with corrective lenses. Reposition your monitor as you adjust your working posture throughout the workday.

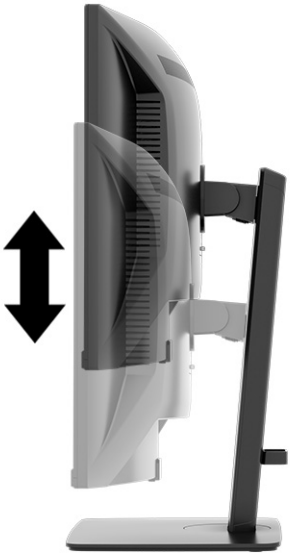

3. Swivel the monitor head to the left or right for the best viewing angle.

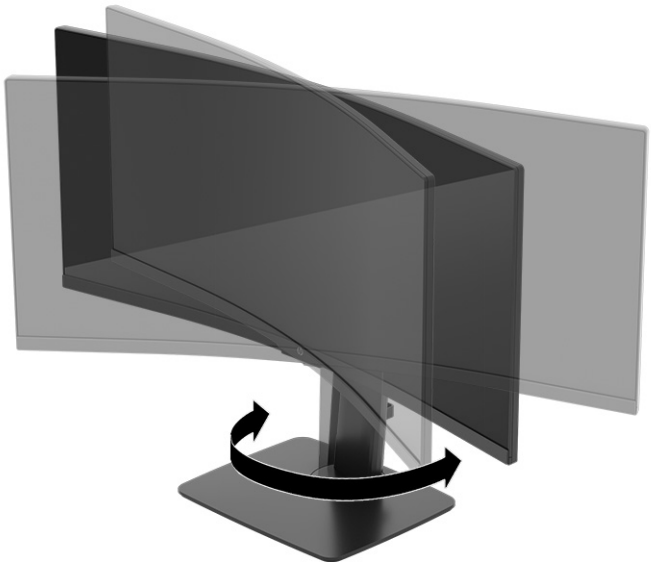

Installing a security cable

As a security measure, you can secure the monitor to a fixed object with an optional security cable available from HP. Use the key that came with the optional security cable to attach and remove the lock.

NOTE: Product appearance might vary.

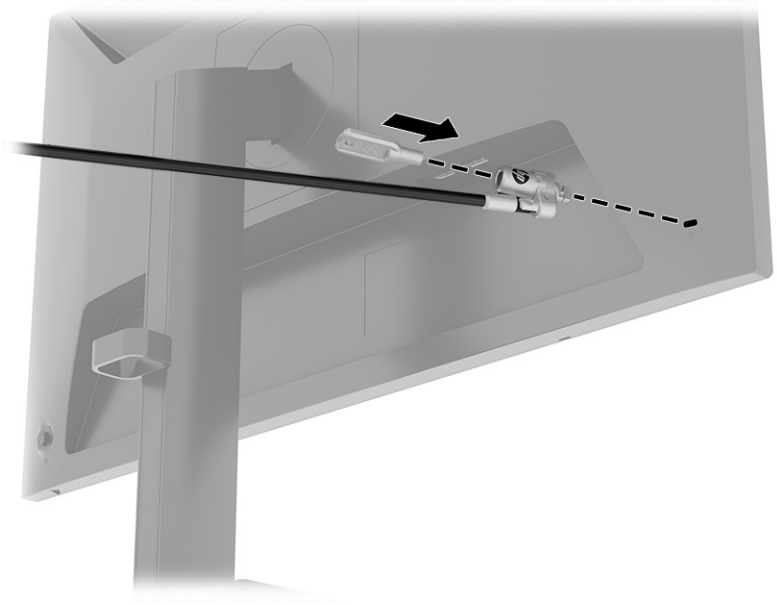

Turning on the monitor

This section provides important information about preventing damage to your monitor, startup indicators, and troubleshooting information.

IMPORTANT: Burn-in image damage might occur on monitors that display the same static image on the screen for 12 or more hours. To avoid burn-in image damage, you must always activate a screen saver application or turn off the monitor when it is not in use for a prolonged period of time. Image retention is a condition that might occur on all LCD screens. Burn-in damage on the monitor is not covered under the HP warranty.

Press the power button on the monitor to turn it on.

NOTE: Refer to the illustration that best matches your monitor.



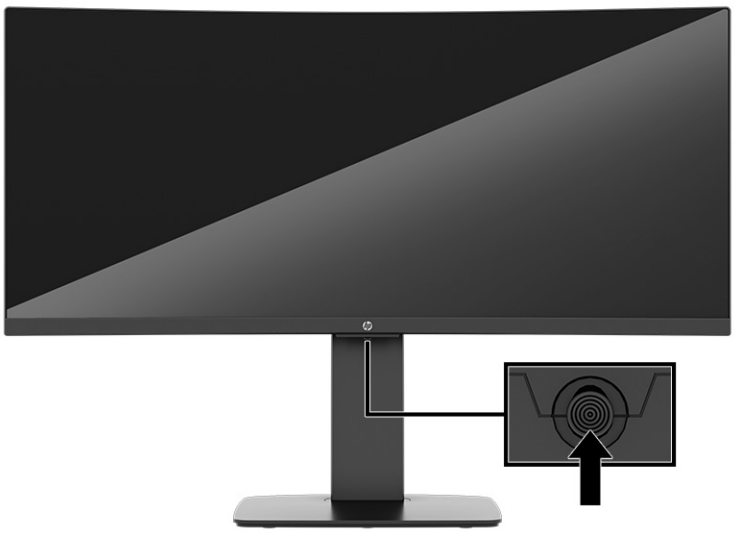

NOTE: If pressing the power button has no effect, the Power Button Lockout feature might be enabled. To disable this feature, press and hold the monitor power button for 10 seconds.

When you first turn on your monitor, a monitor status message is displayed for 5 seconds. The message shows which input is the current active signal, the status of the auto-switch source setting (On or Off; default setting is On), the current preset display resolution, and the recommended preset display resolution.

Another message then appears to ask if you want to keep the monitor in power-saving mode or switch to performance mode. You can choose which setting you prefer.

The monitor automatically scans the signal inputs for an active input and uses that input for the display.

HP watermark and image retention policy

Some monitors are designed with In-Plane Switching (IPS) display technology, which provides ultrawide viewing angles and advanced image quality. Though suitable for many applications, this panel technology is not suitable for static, stationary, or fixed images for long periods of time, unless you use screen savers.

Applications with static images can include camera surveillance, video games, marketing logos, and templates. Static images can cause image retention damage that could look like stains or watermarks on the monitor's screen.

Image retention damage on monitors that are in use 24 hours per day is not covered under the HP warranty. To avoid image retention damage, always turn off the monitor when it is not in use, or use the power management setting, if supported on your computer, to turn off the monitor when the computer is idle.

Connecting an HP notebook or desktop (curved model only)

You can attach a computer, notebook, gaming console, or similar device to the monitor with a single USB Type-C connection. The USB Type-C port provides data, video, and power delivery when you connect the device.

NOTE: The host computer must be able to support DisplayPort Alt Mode (video, charging, and USB) over the USB Type-C connector and must also be compatible with USB Type-C ports.

To connect a computer, connect one end of a USB Type-C cable to the USB Type-C port on the rear of the monitor and the other end to the USB Type-C port on the computer. This USB Type-C cable provides single-cable connectivity for high-speed data, audio and video, and power delivery.

NOTE: The monitor delivers up to 90 W of power over a USB Type-C connection. When connecting the host computer via USB Type-C, DC power out does not need to be connected. Do not connect two power sources (DC power out and USB Type-C) to the host computer.

3 Using the monitor

This chapter describes how to use your monitor and its features, including software and utilities, the OSD menu, the function buttons, power modes, and Windows® Hello.

Downloading HP Display Center

You can download and install the HP Display Center software from the Microsoft store.

1. Select the Microsoft Store app on your desktop or type `Microsoft Store` in the taskbar search box.
2. Type `HP Display Center` in the **Microsoft Store** search box.
3. Follow the on-screen instructions.

The tool downloads to the selected location.

Downloading software and utilities

You can download and install these files from HP Support.

- INF (Information) file
- ICM (Image Color Matching file <model name>.icm)

To download the files:

1. Go to http://www.hp.com/support.
2. Select **Software and Drivers**.
3. Select your product type.
4. Enter your HP monitor model in the search field and follow the on-screen instructions. The .inf and .icm files are included in the SoftPaq.

The Information (INF) file

The INF file defines monitor resources used by Windows® operating systems to ensure monitor compatibility with the computer's graphics adapter.

This monitor is Plug and Play compatible, and the monitor will work correctly without installing the INF file. Monitor Plug and Play compatibility requires that the computer's graphics card is VESA DDC2 compliant and that the monitor connects directly to the graphics card. Plug and Play does not work through separate BNC-type connectors or through distribution buffers or boxes.

The Image Color Matching (ICM) file

The ICM files are data files that are used in conjunction with graphics programs to provide consistent color matching from monitor screen to printer, or from scanner to monitor screen. These files are activated from within graphics programs that support this feature.

NOTE: The ICM color profile is written in accordance with the International Color Consortium (ICC) Profile Format specification.

Using the OSD menu

You can adjust your HP monitor to suit your preferences. Use the OSD menu to customize the viewing features of your monitor.

To access and make adjustments in the OSD, use the Joystick on the monitor's rear panel. See Rear components, flat-screen monitor on page 5.

1. If the monitor is not on, press the power button to turn on the monitor.
2. Press the center of the Joystick.
3. Press the function buttons up, down, left, or right to navigate menu choices. Press the center of the Joystick to make a selection.

The following table lists possible menu selections in the OSD main menu. It includes descriptions for each setting and its impacts on your monitor's appearance or performance.

Table 3-1 OSD menu options and descriptions (flat model)

Main menu	Description
Brightness+	Adjusts the brightness level of the screen.
Color	Selects and adjusts the screen color.
Image	Adjusts the screen image.
Input	Performs the following actions: • Selects the video input signal (DisplayPort, HDMI) • Auto switches controls • DisplayPort hot plug detection • DisplayPort mode
Audio	Enables audio, audio input, speakers, and volume.
Power	Adjusts the power settings.
Menu	Adjusts the OSD menu and function button controls, and selects the language used to display the OSD menu. The factory default is English.
Management	Adjusts the DDC/CI settings, and returns all OSD menu settings to the factory default settings.
Information	Provides information about the monitor such as optimal display mode, power mode, and serial number.

Table 3-2 OSD menu options and descriptions (curved model)

Main menu	Description
Brightness+	Adjusts the brightness level of the screen.
Color	Selects and adjusts the screen color.
Image	Adjusts the screen image.
Input	Performs the following actions: • Selects the video input signal (DisplayPort, HDMI, USB-C® video) • Auto switches controls • KVM controls (keyboard, video, and mouse) • DisplayPort hot plug detection • DisplayPort mode • USB-C configuration
Audio	Enables audio, audio input, speakers, and volume.
Power	Adjusts the power settings.
Menu	Adjusts the OSD menu and function button controls, and selects the language used to display the OSD menu. The factory default is English.
Management	Adjusts the DDC/CI settings, and returns all OSD menu settings to the factory default settings.
Information	Provides information about the monitor such as optimal display mode, power mode, and serial number.

Using the Joystick buttons (flat screen monitor)

The Joystick menu options offer useful actions, and you can customize all of the buttons except for the power button (middle button) and the menu button (down button).

NOTE: The actions of the Joystick menu options vary among monitor models.

For information about changing the function of the Joystick menu options, see Reassigning the OSD menu options on page 29.



Table 3-3 Menu options and functions

Option	Icon	Description
Power		Press the power button for two seconds to turn off the monitor.
Menu		Opens the OSD main menu, selects a menu item from the OSD, or closes the OSD menu.
Brightness		Adjusts the monitor screen brightness.
Color		Opens the Color menu where you can select a preset view mode.
Next		Switches the monitor's input source to the next active input.

Using the Joystick buttons (curved screen monitor)

The Joystick menu options offer useful actions, and you can customize all of the buttons except for the menu button (middle button).

NOTE: The actions of the Joystick menu options vary among monitor models.

For information about changing the function of the Joystick menu options, see Reassigning the OSD menu options on page 29.



Table 3-4 Menu options and functions

Option	Icon	Description
Power		Press the power button for two seconds to turn off the monitor.
Menu		Opens the OSD main menu, selects a menu item from the OSD, or closes the OSD menu.
Brightness		Adjusts the monitor screen brightness.
Color		Opens the Color menu where you can select a preset view mode.
KVM	KVM	Opens the KVM menu to bind the USB upstream ports to a specific video input or toggle back and forth from one computer to the other.

Reassigning the OSD menu options

Except for the **Menu** option, you can change the action associated with an option from its default action to a menu option you use more frequently.

To reassign the function buttons:

1. Press the Menu option to open the OSD menu.
2. Select **Menu**, select **Assign Buttons**, and then select one of the available options for the button that you want to assign.

Display mode status

When you turn on the monitor, the status message shows the display mode. The display mode is also shown when you change the video input.

Changing the power mode setting

This section describes how to activate performance mode. Certain features on your monitor might require performance mode to be active.

When in sleep mode, to comply with international power standards, the monitor default setting is power saver mode.

If your monitor supports performance mode and you need to keep the USB ports enabled when the monitor is in auto-sleep mode, change the power mode setting from **Power Saver** to **Performance**.

NOTE: If you are connecting a computer that is not battery powered, you must change the power mode setting to performance mode.

To change the power mode setting:

1. Press the Menu button to open the OSD menu.
2. Select **Power**, select **Power Mode**, and then select **Performance**.
3. Select **Back** and close the OSD.

Using Auto-Sleep Mode

Your monitor has an energy-saving feature called Auto-Sleep Mode, which is a reduced power state. This section describes how to activate or adjust Auto-Sleep Mode on your monitor.

When Auto-Sleep Mode is enabled, which it is by default, the monitor enters a reduced power state when the computer signals low-power mode, which it does by the absence of either a horizontal or vertical sync signal.

Upon entering this reduced power state (Auto-Sleep mode), the monitor screen is blanked, the backlight turns off, and the power light turns amber. The monitor draws less than 0.5 W of power when in this reduced power state. The monitor wakes from Auto-Sleep mode when the computer sends an active signal to the monitor (for example, when you activate the mouse or keyboard).

To disable Auto-Sleep Mode in the OSD:

1. Press the Menu button to open the OSD or press the Joystick to open the OSD.
2. In the OSD, select **Power**.
3. Select **Auto-Sleep Mode**, and then select **Off**.

Using low blue light mode

Decreasing the blue light emitted by the monitor reduces the blue light exposure to your eyes. This monitor uses a low blue light panel in default setting mode.

In the default setting mode, this monitor's low blue light panel is certified by TÜV to reduce blue light output and create a more relaxing and less stimulating image while you read content on the screen.

Connecting a second computer to the monitor using the KVM function

The KVM function provides the capability to connect two computers to one monitor with quick monitor access to either computer. It enables both monitors to be controlled using one keyboard and one mouse.

To enable video input from a second computer, connect either a DisplayPort cable or an HDMI cable to the appropriate connector on the rear of the monitor.

For example, connect one end of a DisplayPort cable to a DisplayPort connector on the rear of the monitor, and the other end to a DisplayPort connector on the second computer. If the second computer has only an HDMI port, connect one end of the HDMI cable to an HDMI port on the rear of the monitor, and the other end to an HDMI port on the second computer.

To enable the USB connection to the second computer, connect a USB Type-B to USB Type-A cable to the USB Type-B port on the monitor.

Multiple function support includes charging, USB, and display functions.

Toggle in KVM Mode

With two computers connected to one monitor, you can switch back and forth between computers by pressing the OSD button on the monitor.

Be sure that your keyboard and mouse are connected to the USB port on the bottom of the monitor. See Rear components, curved-screen monitor on page 6.

The default OSD assignment key is defined as the KVM switch. You can adjust its assignment from **Up** to **Right** or **Left** in OSD settings.

You can check USB host status under **KVM Controls** in the OSD menu. If inactive, the status is highlighted in yellow.

KVM controls

You can configure the KVM settings in the OSD.

From the OSD menu, select **Input**, and then select **KVM controls** to manually bind USB hosts to video inputs.

- USB-C host (PC), serving as data input, can bind to the following video inputs: USB-C video, HDMI, or DisplayPort.
- USB-B host (PC), serving as another data input, can bind to the following video inputs: HDMI or DisplayPort.

Connection priorities in KVM mode

When two monitors are in KVM mode, connection priorities are assigned.

The following types of KVM mode connections are available:

Bind mode uses the current video input port even if the auto-switching USB host is disabled. If the first computer is disconnected, the KVM mode setting switches to the second computer, provided it is turned on.

Text to Speech (select products/regions only)

Text to Speech (TTS) converts text into spoken words. You can enable TTS to assist you when reading text on the monitor.

If your monitor has built-in speakers, you can request the TTS accessibility device by calling HP Support at (877) 656-7058, Monday through Friday, 6 a.m. to 9 p.m. Mountain Time.

NOTE: Support is in English only.

NOTE: You can enable TTS support on the curved model by connecting a TTS accessibility device into a dedicated USB-A port. TTS is not available from a built-in speaker with the accessibility function enabled.

4 Support and troubleshooting

If your monitor is not working as expected, you might be able to resolve the issue by following the instructions in this section.

Using the self-test function

To help verify the correct operation of this monitor, a series of startup images and messages is displayed. These images and messages function as a self-test. Use the following procedure to start the self-test.

1. Turn off the monitor and disconnect all of the cables except the power cord.
2. Turn on the monitor. An image similar to the one shown here is displayed.



A monitor status message is displayed next.

Flat-screen monitor

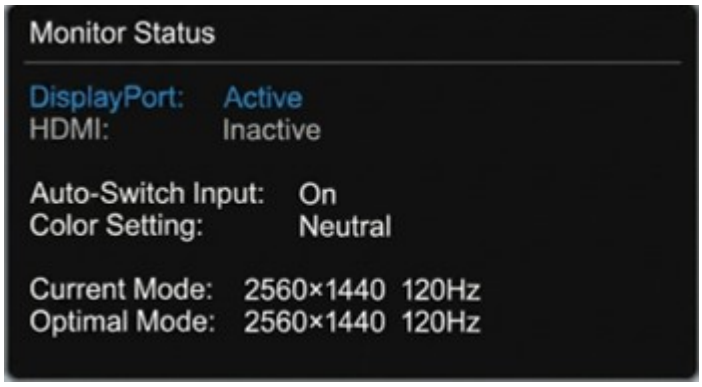

Curved-screen monitor

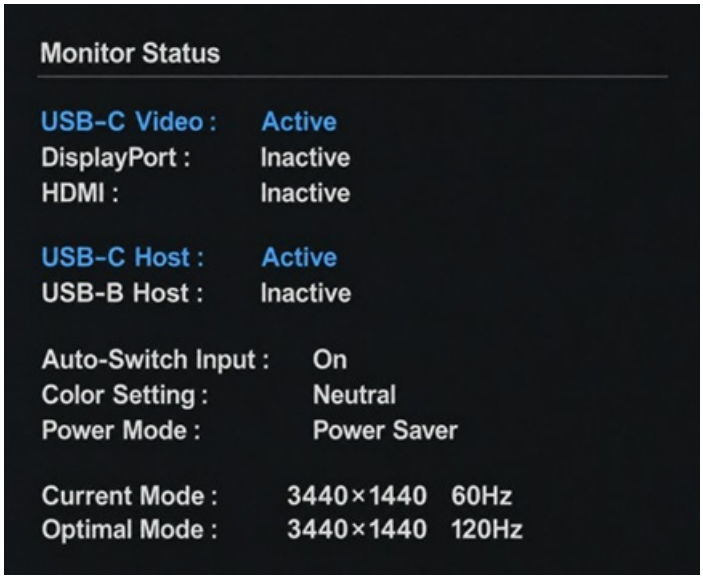

The power-on image and monitor status message indicate that the monitor is working as expected and is looking for a valid video signal.

3. Connect a video source to the monitor and repeat steps 1 through 2. If no external video signal is detected, check the video connection to the host computer.

Internal test pattern generator

This monitor includes a built-in test pattern generator called **Diagnostic Patterns** to help with diagnosing visual anomalies.

To open **Diagnostic Patterns**:

1. Turn on the monitor.

NOTE: Video inputs do not need to be connected.

2. In the left column, navigate to **Management**.
3. In the middle column, navigate to **Diagnostic Patterns**.
4. Perform one of these tasks for the options in the right column:
   - Highlight an option to see a preview in the background (behind the on-screen display (OSD) menu).
   - Select an option to close the OSD menu and view the test pattern in full screen. Press any of the menu buttons in the column to exit the full screen pattern and return to the OSD menu.
   - To close the **Diagnostic Patterns** menu, select **Back** at the bottom of the right column or select any of the other options in the middle column.

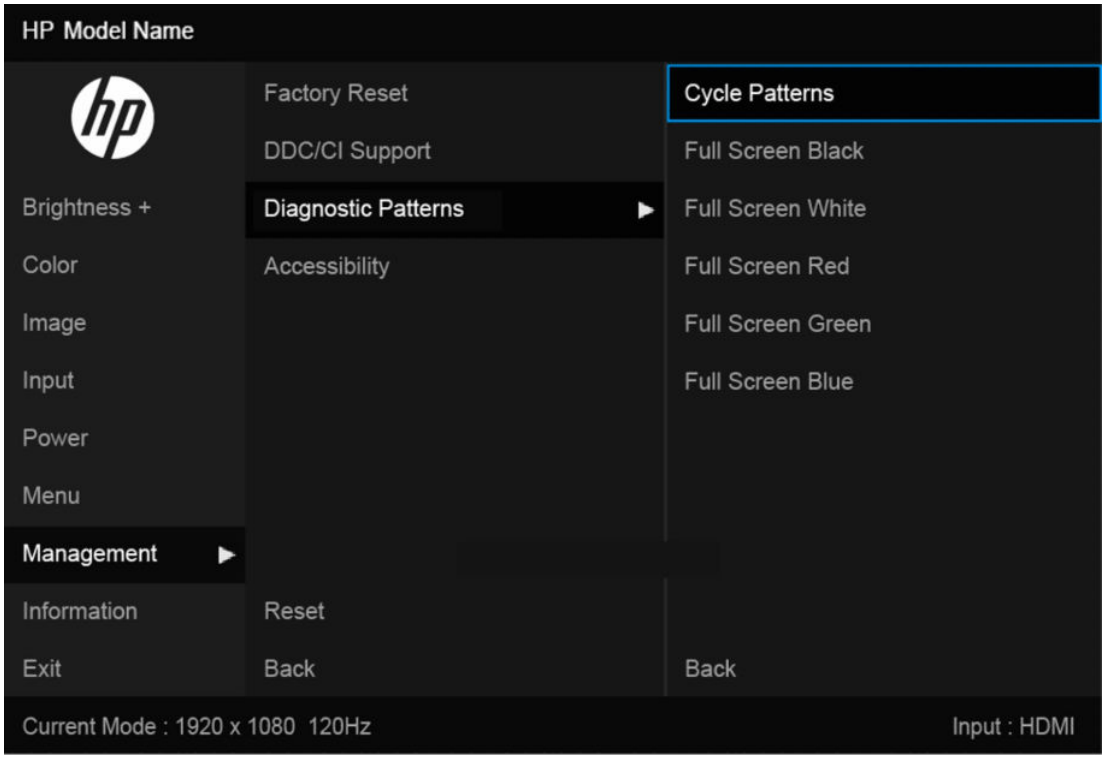

NOTE: You can view the diagnostic patterns with or without an active external video signal.

Solving common issues

The following table lists possible issues, the possible cause of each issue, and the recommended solutions.

NOTE: Always ensure that the BIOS, device firmware, and monitor firmware are updated to the latest version.

Table 4-1 Common issues and solutions

Issues	Possible cause	Solution
Screen is blank or video is blinking.	Power cord is disconnected.	Connect the power cord.
	Monitor is off.	Press the monitor power button. **NOTE:** If pressing the power button has no effect, press and hold the power button for 10 seconds to disable the Power Button Lockout feature.
	Video cable is improperly connected.	Connect the video cable properly. For more information, see Connecting the cables on page 14.
	System is in auto-sleep mode.	Press any key on the keyboard or move the mouse to inactivate the screen blanking utility.

Table 4-1 Common issues and solutions (continued)

Issues	Possible cause	Solution
	Video card is incompatible.	Perform one of the following actions: • Open the OSD menu and select the **Input** menu. Set **Auto-Switch Input** to **Off**, and then manually select the input. • Replace the video card or connect the video cable to one of the computer's on-board video sources.
Image appears blurred, indistinct, or too dark.	Brightness setting is too low.	Open the OSD menu, and select **Brightness** to adjust the brightness scale as needed.
"Check Video Cable" is displayed on the screen.	Monitor video cable is disconnected.	Connect the appropriate video signal cable between the computer and monitor. Be sure that the computer power is off while connecting the video cable.
"Input Signal Out of Range" is displayed on screen.	Video resolution rate, refresh rate, or both, are set higher than the monitor supports.	Change the settings to a supported setting. See Preset display resolutions on page 40.
The monitor does not enter into a low-power sleep state.	The monitor's power saving control is disabled.	Open the OSD menu and select **Power**, select **Auto-Sleep Mode**, and then set auto-sleep to **On**.
"OSD Lockout" is displayed.	The monitor's OSD Lockout function is enabled.	Press and hold the Left button for 10 seconds to disable the OSD Lockout function.
Monitor has trouble waking from sleep mode		DisplayPort inputs: Set the DisplayPort hot-plug detection to **Always Active**. Power mode monitors: Set the hot-plug detection to **Always Active** to switch the monitor to performance mode.
Slow performance from USB		The monitor has a two-lane default for USB-C. On selected products, you can press the Joystick button to open the OSD menu, navigate to the USB Type-C configuration, and then select **USB-C Video + USB 3.0** for data transfer prioritization.
Lower refresh rate or color bits		Select **USB-C Video + USB 2.0** for refresh rate/color bits prioritization.

Button lockouts

The button lockout function is available only when the monitor is on, an active signal is displayed, and the OSD menu is closed. Holding down the Left button for 10 seconds disables that button. You can enable the button again by holding it down for 10 seconds.

5 Maintaining the monitor

Properly maintained, your monitor can run for many years. These instructions provide steps you can perform to keep your monitor in the best condition.

Maintenance guidelines

Follow these instructions to enhance the performance and extend the life of the monitor.

- Do not open the monitor cabinet or attempt to service this product yourself. Adjust only those controls that are covered in the operating instructions. If the monitor is not operating properly or has been dropped or damaged, contact an authorized HP dealer, reseller, or service provider.
- Use only a power source and connection appropriate for this monitor, as indicated on the label or back plate of the monitor.
- Be sure that the total ampere rating of the products connected to the outlet does not exceed the current rating of the AC outlet and that the total ampere rating of the products connected to the cord does not exceed the rating of the cord. Look on the power label to determine the ampere rating (AMPS or A) for each device.
- Install the monitor near an outlet that you can easily reach. Disconnect the monitor by grasping the plug firmly and pulling it from the outlet. Never disconnect the monitor by pulling the cord.
- Turn the monitor off when it is not in use, and use a screen saver program. Doing this can substantially increase the life expectancy of the monitor.

NOTE: A burned-in image on the monitor is not covered under the HP warranty.

- Never block the slots or openings of the cabinet or push objects into them. These openings provide ventilation.
- Do not drop the monitor or place it on an unstable surface.
- Do not allow anything to rest on the power cord. Do not walk on the cord.
- Keep the monitor in a well-ventilated area, away from excessive light, heat, or moisture.

Cleaning the monitor

Use these instructions to clean your monitor when necessary.

1. Turn off the monitor and unplug the power cord from the AC outlet.
2. Disconnect any external devices.
3. Dust the monitor by wiping the screen and the cabinet with a soft, clean antistatic cloth.

CAUTION: Never spray cleaner directly onto the screen. It can run behind the bezel and damage the electronics. Water dripping into the ventilation openings or other points of entry can cause

damage to the monitor. Protect your monitor by always consulting your user guide for cleaning procedures, or go to http://www.hp.com/support and search for How to Clean Your Computer.

IMPORTANT: Do not use cleaners that contain petroleum-based materials such as benzene, thinner, or any volatile substance to clean the monitor screen or cabinet. These chemicals might damage the monitor.

IMPORTANT: Spray the cleaner onto a cloth and use the damp cloth to gently wipe the screen surface. The cloth should be moist, but not wet. Allow the monitor to air-dry before use.

4. After you remove the dirt and debris, you can also clean the surfaces with a disinfectant. The World Health Organization (WHO) recommends cleaning surfaces, followed by disinfection, as a best practice for preventing the spread of viral respiratory illnesses and harmful bacteria. A disinfectant that is within HP's cleaning guidelines is an alcohol solution consisting of 70% isopropyl alcohol and 30% water. This solution is also known as rubbing alcohol and is sold in most stores.

Shipping the monitor

Keep the original packing box in a storage area. You might need it later if you ship the monitor or move.

A Technical specifications

This section contains technical specifications for the physical aspects of your monitor, such as the weight and viewing dimensions, as well as required environmental operating conditions and power source ranges.

All specifications represent the typical specifications provided by HP component manufacturers; actual performance can vary either higher or lower.

NOTE: For the latest specifications or additional specifications for this product, go to http://www.hp.com/go/quickspecs/ and search for your specific monitor model to find the model-specific QuickSpecs.

68.47 cm (27 in) model specifications (QHD)

This section provides specifications for your monitor.

Table A-1 Technical specifications

Specification	Metric	U.S.
Display, wide-screen	**71.19 cm diagonal**	28.0 in
Type	IPS	
Viewable image size	**68.47 cm diagonal**	27.0 in diagonal
Maximum weight (unpacked)	**5.68 kg**	12.52 lb
Dimensions (unpacked with stand)		
Height (highest position)	**51.72 cm**	20.35 in
Height (lowest position)	**38.22 cm**	15.05 in
Depth (with cable management)	**22.69 cm**	8.94 in
Width	**61.3 cm**	24.13 in
Tilt	**-5° to 23°**	
Swivel	**±360°**	
Pivot	**+90°**	
Environmental requirements temperature		
Operating temperature	**5°C to 35°C**	41°F to 95°F
Storage temperature	**-40°C to 65°C**	-40°F to 149°F
Storage humidity	5% to 95% (noncondensing)	
Power source	100 V AC to 240 V AC, 50 Hz to 60 Hz	
Video input terminal	One HDMI port, one DisplayPort connector	

86.42 cm (34 in) model specifications (WQHD)

This section provides specifications for your monitor.

Table A-2 Technical specifications

Specification	Metric	U.S.
Display, wide-screen	**88.61 cm**	34.8 in
Type	VA	
Viewable image size	**86.42 cm**	34.0 in diagonal
Maximum weight (unpacked)	**13.66 kg**	30.11 lb
Dimensions (unpacked with stand)		
Height (highest position)	**57.45 cm**	22.62 in
Height (lowest position)	**47.45 cm**	18.65 in
Depth (with cable management)	**25.06 cm**	9.87 in
Width	**80.73 cm**	31.78 in
Tilt	**-5° to 23°**	
Swivel	±45°	
Environmental requirements temperature		
Operating temperature	**5°C to 35°C**	41°F to 95°F
Storage temperature	**-40°C to 65°C**	-40°F to 149°F
Storage humidity	5% to 95% (noncondensing)	
Power source	100 V AC to 240 V AC, 50 Hz to 60 Hz	
Video input terminal	One HDMI port, one DisplayPort connector, one USB Type-C Alt mode connector	

Preset display resolutions

The following display resolutions are the most commonly used modes and are set as factory defaults. The monitor automatically recognizes these preset modes, and they will appear properly sized and centered on the screen.

68.47 cm (27.0 in) model (flat)

This section provides preset display resolutions and preset timing resolutions.

Table A-3 Preset display resolutions

Preset	Pixel format	Horz freq (kHz)	Vert freq (Hz)
1	640 × 480	31.469	59.940
2	640 × 480	37.500	75.000
3	720 × 400	31.470	70.087

Table A-3 Preset display resolutions (continued)

Preset	Pixel format	Horz freq (kHz)	Vert freq (Hz)
4	800 × 600	37.879	60.317
5	800 × 600	46.875	75.000
6	1024 × 768	48.363	60.004
7	1024 × 768	60.023	75.029
8	1280 × 720	45.000	60.000
9	1280 × 1024	63.981	60.020
10	1280 × 1024	79.976	75.025
11	1440 × 900	55.935	59.887
12	1600 × 1200	75.000	60.000
13	1680 × 1050	65.290	59.954
14	1920 × 1080	56.250	50.000
15	1920 × 1080	67.500	60.000
16	1920 × 1080	135.00	120.000
17	1920 × 1200	74.560	59.890
18	2560 × 1440	88.770	59.940
19	2560 × 1440	111.79	74.920
20	2560 × 1440	150.85	99.900
21	2560 × 1440	183.000	120.000

88.61 cm (34.0 in) model (curved)

This section provides preset display resolutions and preset timing resolutions.

Table A-4 Preset display resolutions

Preset	Pixel format	Horz freq (kHz)	Vert freq (Hz)
1	640 × 480	31.469	59.940
2	640 × 480	37.500	75.000
3	720 × 400	31.469	70.090
4	800 × 600	37.879	60.320
5	800 × 600	46.875	75.000
6	1024 × 768	48.363	60.000
7	1024 × 768	60.023	75.030
8	1280 × 720	45.000	60.000
9	1280 × 800	49.702	59.810
10	1280 × 1024	63.981	60.020

Table A-4 Preset display resolutions (continued)

Preset	Pixel format	Horz freq (kHz)	Vert freq (Hz)
11	1440 × 900	55.935	59.890
12	1600 × 900	60.000	60.000
13	1680 × 1050	65.290	59.950
14	1920 × 1080	67.500	60.000
15	1920 × 1200	74.556	59.980
16	2560 × 1440	182.996	120.000
17	3440 × 1440	88.860	60.000
18	3440 × 1440	111.875	74.980
19	3440 × 1440	150.972	99.980
20	3440 × 1440	182.986	119.99*

* Only DisplayPort, USB-C support

High-definition video formats

This section provides high-definition video formats.

Table A-5 High-definition video formats (flat model)

Preset	Timing name	Pixel format	Horz freq (kHz)	Vert freq (Hz)
1	480p	640 × 480	31.469	59.940
2	480p	720 × 480	31.469	59.940
3	576p	720 × 576	31.250	50.000
4	720p50	1280 × 720	37.500	50.000
5	720p60	1280 × 720	45.000	60.000
6	720p100	1280 × 720	75.000	100.000
7	1080p50	1920 × 1080	56.250	50.000
8	1080p60	1920 × 1080	67.500	60.000
9	1080p100	1920 × 1080	112.500	100.000
10	1080p120	1920 × 1080	135.000	120.000

Table A-6 High-definition video formats (curved model)

Preset	Timing name	Pixel format	Horz freq (kHz)	Vert freq (Hz)
1	480p	640 × 480	31.469	59.940
2	480p	720 × 480	31.469	59.940

Table A-6 High-definition video formats (curved model) (continued)

Preset	Timing name	Pixel format	Horz freq (kHz)	Vert freq (Hz)
3	576p	720 × 576	31.250	50.000
4	720p50	1280 × 720	37.500	50.000
5	720p60	1280 × 720	45.000	60.000
6	1080p60	1920 × 1080	67.500	60.000
7	1080p100	1920 × 1080	112.500	100.000
8	1080p120	1920 × 1080	135.000	120.000

Energy saver feature

This monitor supports a reduced power state.

The reduced power state is initiated if the monitor detects the absence of either the horizontal sync signal or the vertical sync signal. Upon detecting the absence of these signals, the monitor screen is blank, the backlight is turned off, and the power light turns amber. In the reduced power state, the monitor uses < 0.5 W of power. There is a brief warm-up period before the monitor returns to its normal operating state.

See the computer manual for instructions on setting the energy saver mode (sometimes called “power management feature”).

NOTE: This power saver feature works only when the monitor is connected to a computer that has energy-saver features.

By selecting the settings in the monitor Sleep Timer utility, you can also program the monitor to initiate the reduced power state at a predetermined time. When the monitor Sleep Timer utility initiates the reduced power state, the power light blinks amber.

B Accessibility

HP's goal is to design, produce, and market products, services, and information that everyone everywhere can use, either on a standalone basis or with appropriate third-party assistive technology (AT) devices or applications.

HP and accessibility

Because HP works to weave diversity, inclusion, and work/life into the fabric of the company, it is reflected in everything HP does. HP strives to create an inclusive environment focused on connecting people to the power of technology throughout the world.

Finding the technology tools you need

Technology can unleash your human potential. AT removes barriers and helps you create independence at home, at work, and in the community. AT helps increase, maintain, and improve the functional capabilities of electronic and information technology.

For more information, see Finding the best assistive technology on page 45.

The HP commitment

HP is committed to providing products and services that are accessible for people with disabilities. This commitment supports the company's diversity objectives and helps ensure that the benefits of technology are available to all.

The HP accessibility goal is to design, produce, and market products and services that can be effectively used by everyone, including people with disabilities, either on a standalone basis or with appropriate assistive devices.

To achieve that goal, this Accessibility Policy establishes seven key objectives to guide HP actions. All HP managers and employees are expected to support these objectives and their implementation in accordance with their roles and responsibilities:

- Raise the level of awareness of accessibility issues within HP, and provide employees with the training they need to design, produce, market, and deliver accessible products and services.
- Develop accessibility guidelines for products and services, and hold product development groups accountable for implementing these guidelines where competitively, technically, and economically feasible.
- Involve people with disabilities in the development of accessibility guidelines and in the design and testing of products and services.
- Document accessibility features, and make information about HP products and services publicly available in an accessible form.
- Establish relationships with leading AT and solution providers.
- Support internal and external research and development that improves AT relevant to HP products and services.
- Support and contribute to industry standards and guidelines for accessibility.

International Association of Accessibility Professionals (IAAP)

IAAP is a not-for-profit association focused on advancing the accessibility profession through networking, education, and certification. The objective is to help accessibility professionals develop and advance their careers and to better enable organizations to integrate accessibility into their products and infrastructure.

As a founding member, HP joined to participate with other organizations to advance the field of accessibility. This commitment supports HP's accessibility goal of designing, producing, and marketing products and services that people with disabilities can effectively use.

IAAP will make the profession strong by globally connecting individuals, students, and organizations to learn from one another. If you are interested in learning more, go to http://www.accessibilityassociation.org to join the online community, sign up for newsletters, and learn about membership options.

Finding the best assistive technology

Everyone, including people with disabilities or age-related limitations, should be able to communicate, express themselves, and connect with the world using technology. HP is committed to increasing accessibility awareness within HP and with our customers and partners.

Whether it's large fonts that are easy on the eyes, voice recognition that lets you give your hands a rest, or any other AT to help with your specific situation—a variety of ATs make HP products easier to use. How do you choose?

Assessing your needs

Technology can unleash your potential. AT removes barriers and helps you create independence at home, at work, and in the community. AT helps increase, maintain, and improve the functional capabilities of electronic and information technology.

You can choose from many AT products. Your AT assessment should allow you to evaluate several products, answer your questions, and facilitate your selection of the best solution for your situation. You will find that professionals qualified to do AT assessments come from many fields, including those licensed or certified in physical therapy, occupational therapy, speech/language pathology, and other areas of expertise. Others, while not certified or licensed, can also provide evaluation information. You will want to ask about the individual's experience, expertise, and fees to determine if they are appropriate for your needs.

Accessibility for HP products

These links provide information about accessibility features and AT, if applicable and available in your country or region, that are included in various HP products. These resources will help you select the specific AT features and products most appropriate for your situation.

- HP Aging & Accessibility: Go to http://www.hp.com, type `Accessibility` in the search box. Select **Office of Aging and Accessibility**.
- HP computers: For Windows products, go to http://www.hp.com/support, type `Windows Accessibility Options` in the **Search our knowledge library** search box. Select the appropriate operating system in the results.
- HP Shopping, peripherals for HP products: Go to http://store.hp.com, select **Shop**, and then select **Monitors** or **Accessories**.

If you need additional support with the accessibility features on your HP product, see Contacting support on page 49.

Additional links to external partners and suppliers that may provide additional assistance:

- Microsoft Accessibility information (Windows and Microsoft Office)
- Google Products accessibility information (Android, Chrome, Google Apps)

Monitor accessibility features (select products/regions only)

HP monitors enable you to find and configure display settings directly from your monitor, without needing to use an external device such as a computer, using multiple types of accessibility enhancements.

Built-in accessibility features

The following accessibility features are built into the monitor.

- Physical buttons or a Joystick that are tactilely discoverable.
- Physical button or Joystick labels that are displayed on-screen.
- On-Screen Display (OSD) menu
  - Menu items, text, and elements meet a 4.5:1 (or greater) contrast ratio.
  - Focus indication is provided.

What is Accessibility Mode?

Accessibility Mode enables you to use audio navigation and to enlarge items on the screen.

When you turn on Accessibility Mode, the following adjustments are made:

- Menu timeout setting is set to the maximum duration of 60 seconds (default is 30 seconds).
- Language is set to English, which is the only language currently supported in Accessibility Mode. When Accessibility Mode is turned off, the previous language is used.
- On FHD monitors, the OSD menu is set to a fixed position in the lower-right quadrant of the screen.
- Menu items, text, and other elements meet a 4.5:1 contrast ratio or greater.
- Text is enlarged to a 4.8 mm or larger font size.

How do you turn Accessibility Mode on or off?

Turn Accessibility Mode on or off using either physical monitor controls or an OSD menu.

- On a monitor with a Joystick, press and hold the right button for four seconds to turn Accessibility Mode on or off.

  When Accessibility Mode is turned on using a physical button, an Accessibility Mode is On message is displayed. When Accessibility Mode is turned off using a physical button, an Accessibility Mode is Off message is displayed.





- Using the OSD menu:
  - To turn on Accessibility Mode, set the language to English, and then select **Management** > **Accessibility** > **On**.
  - To turn off Accessibility Mode, select **Management** > **Accessibility** > **Off**.

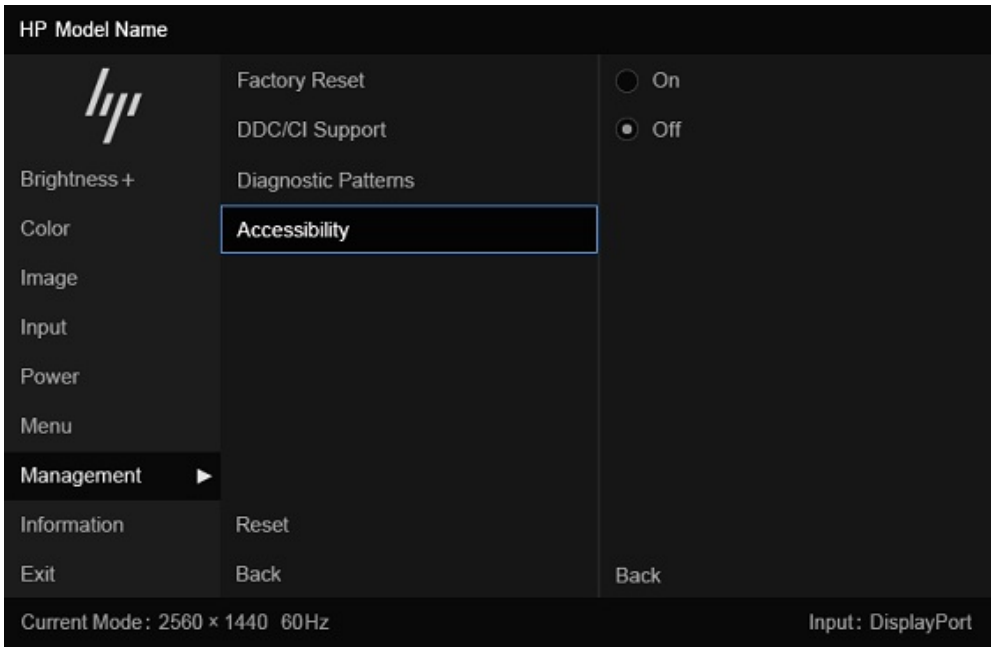

Standards and legislation

Countries worldwide are enacting regulations to improve access to products and services for persons with disabilities. These regulations are historically applicable to telecommunications products and services, PCs and printers with certain communications and video playback features, their associated user documentation, and their customer support.

Standards

The US Access Board created Section 508 of the Federal Acquisition Regulation (FAR) standards to address access to information and communication technology (ICT) for people with physical, sensory, or cognitive disabilities.

The standards contain technical criteria specific to various types of technologies, as well as performance-based requirements which focus on functional capabilities of covered products. Specific criteria cover software applications and operating systems, web-based information and applications, computers, telecommunications products, video and multimedia, and self-contained closed products.

Mandate 376 – EN 301 549

The European Union created the EN 301 549 standard within Mandate 376 as an online toolkit for public procurement of ICT products. The standard specifies the accessibility requirements applicable to ICT products and services, with a description of the test procedures and evaluation methodology for each requirement.

Web Content Accessibility Guidelines (WCAG)

Web Content Accessibility Guidelines (WCAG) from the W3C's Web Accessibility Initiative (WAI) helps web designers and developers create sites that better meet the needs of people with disabilities or age-related limitations.

WCAG advances accessibility across the full range of web content (text, images, audio, and video) and web applications. WCAG can be precisely tested, is easy to understand and use, and allows web developers flexibility for innovation. WCAG 2.0 has also been approved as ISO/IEC 40500:2012.

WCAG specifically addresses barriers to accessing the web experienced by people with visual, auditory, physical, cognitive, and neurological disabilities, and by older web users with accessibility needs. WCAG 2.0 provides characteristics of accessible content:

- **Perceivable** (for instance, by addressing text alternatives for images, captions for audio, adaptability of presentation, and color contrast)
- **Operable** (by addressing keyboard access, color contrast, timing of input, seizure avoidance, and navigability)
- **Understandable** (by addressing readability, predictability, and input assistance)
- **Robust** (for instance, by addressing compatibility with ATs)

Legislation and regulations

Accessibility of IT and information has become an area of increasing legislative importance.

The HP policy landscape website provides information about key legislation, regulations, and standards in the following locations:

- United States
- Canada
- Europe
- Australia

Useful accessibility resources and links

These organizations, institutions, and resources might be good sources of information about disabilities and age-related limitations.

NOTE: This is not an exhaustive list. These organizations are provided for informational purposes only. HP assumes no responsibility for information or contacts you encounter on the internet. Listing on this page does not imply endorsement by HP.

Organizations

These organizations are a few of the many that provide information about disabilities and age-related limitations.

- American Association of People with Disabilities (AAPD)
- The Association of Assistive Technology Act Programs (ATAP)

- Hearing Loss Association of America (HLAA)
- Information Technology Technical Assistance and Training Center (ITTATC)
- Lighthouse International
- National Association of the Deaf
- National Federation of the Blind
- Rehabilitation Engineering & Assistive Technology Society of North America (RESNA)
- Telecommunications for the Deaf and Hard of Hearing, Inc. (TDI)
- W3C Web Accessibility Initiative (WAI)

Educational institutions

Many educational institutions, including these examples, provide information about disabilities and age-related limitations.

- California State University, Northridge, Center on Disabilities (CSUN)
- University of Wisconsin - Madison, Trace Center
- University of Minnesota computer accommodations program

Other disability resources

Many resources, including these examples, provide information about disabilities and age-related limitations.

- ADA (Americans with Disabilities Act) Technical Assistance Program
- ILO Global Business and Disability network
- EnableMart
- European Disability Forum
- Job Accommodation Network
- Microsoft Enable

HP links

These HP-specific links provide information that relates to disabilities and age-related limitations.

HP comfort and safety guide

HP public sector sales

Contacting support

HP offers technical support and assistance with accessibility options for customers with disabilities.

NOTE: Support is in English only.

- Customers who are deaf or hard of hearing who have questions about technical support or accessibility of HP products:
  - Use TRS/VRS/WebCapTel to call (877) 656-7058 Monday through Friday, 6 a.m. to 9 p.m. Mountain Time.
- Customers with other disabilities or age-related limitations who have questions about technical support or accessibility of HP products:
  - Call (888) 259-5707 Monday through Friday, 6 a.m. to 9 p.m. Mountain Time.

Index

A

accessibility 44, 45, 48, 49
accessibility needs
  assessment 45
assistive technology (AT)
  finding 45
  purpose 44
AT (assistive technology)
  finding 45
  purpose 44

C

calling technical support 3
components
  rear 5, 6
connectors
  DisplayPort 5, 6
  power 5, 6
customer support,
  accessibility 49

D

diagnostics 33
DisplayPort connector 5, 6

G

getting started 2
getting to know your monitor 3

H

HDMI port 5, 6
HP Assistive Policy 44
HP Display Center 25
HP resources 2
HP support 2

I

internal diagnostics 34
International Association of
  Accessibility Professionals 45

K

KVM functionality 31

L

label 7

P

ports
  HDMI 5, 6
  USB Type-C 6
power connector 5, 6
product label 7
product number 7

R

rear components 5, 6
resources, accessibility 48

S

safety information 2
Section 508 accessibility
  standards 47
self-test 33
serial number 7
standards and legislation,
  accessibility 47
support 3

T

technical support 3
Text to Speech 32
troubleshooting 33

U

USB Type-C port 6

W

warnings 2