Parts:

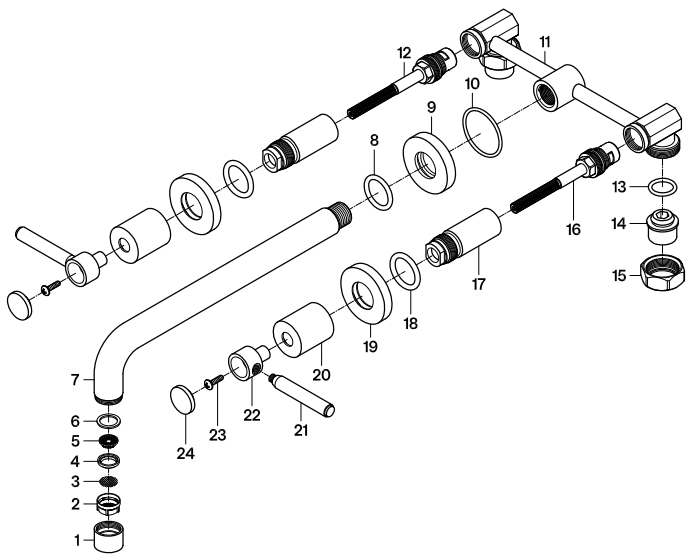

Replacement Parts:

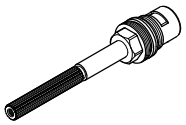

Hot Cartridge:
No.12- KSRPL8000C

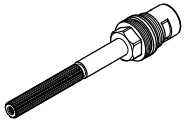

Cold Cartridge:
No.16 - KSRPL8000H

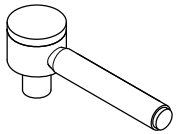

Handle: KSH2961DL

KINGSTON

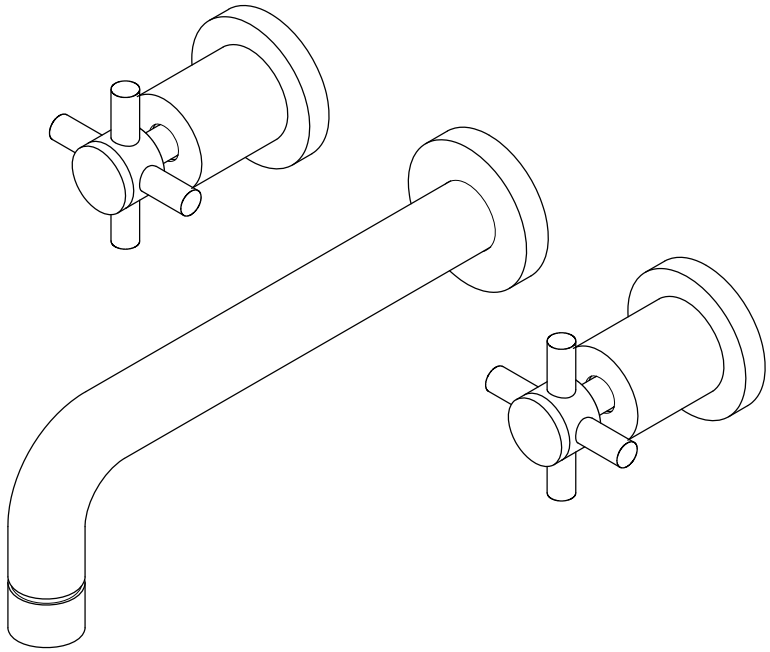

CARE AND MAINTENANCE OF YOUR FAUCET

Your KINGSTON faucet has been finished to the most strict standards; however, due to the high content of minerals in the water, your finish may appear dull and tarnished after time. These are some do's and don'ts to maintain the luster on your faucet for many years to come.

DO
1. Use a silicon based caulking when installing.
2. Clean your faucet with only a mild soap and water solution.
3. Dry your faucet after using it.
4. Give it a coat of Carnauba Wax periodically.

DON'T
1. Use plumbers putty when installing the faucet.
2. Use any abrasive cleaning agents.

It may seem like a very simple and short list but it is that simple to maintain your faucet, looking shiny and new.

If your faucet is already looking somewhat dull and tarnished, before replacing it, try cleaning it with a 50/50 solution of vinegar and water, you may need to soak some rags and wrap around those stubborn areas, leave
overnight and rinse completely in the morning, apply Carnauba wax once you have removed the mineral deposits.

www.kingstonbrass.com

TOLL-FREE CUSTOMER SERVICE: 1-877-2-KBRASS
TECHNICAL SUPPORT E-mail: service@kingstonbrass.com
12775 Reservoir Street, Chino, CA 91710

NOTICE

Failure to follow all directions may cause leaks which may result in water damage

⚠CAUTION

Failure to follow all installation directions may cause product to detach from the wall and cause serious injury

KINGSTON

INSTALLATION INSTRUCTIONS
Twin Handles Wall Mount Faucet

BEFORE BEGINNING INSTALLATION:

1. Flush plumbing lines to clear any debris.
2. Shut off both supply lines after flushing.

Need Tools:

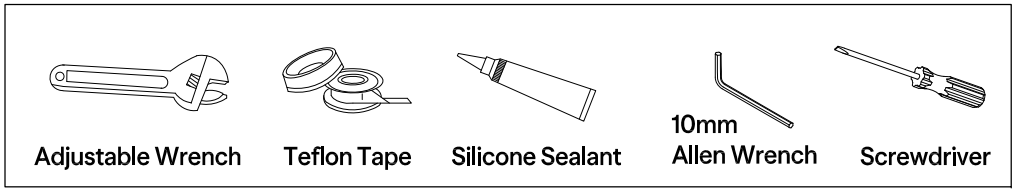

1

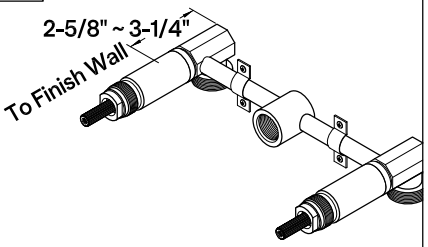

1. Properly secure valve body to wood bracing using copper straps, make sure to place body so that the distance between the back of the valve body to the finish wall surface is 2-5/8" to 3-1/4".

2

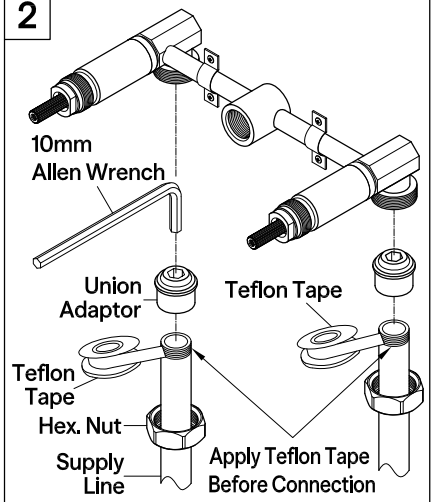

2. Connect valve assembly to 1/2" IPS supply lines, the union adaptors on this valve are threaded for 1/2" NPT male threaded fittings.

Warning: To avoid structural damages, do not use gas fittings or fittings of any other size.

Apply Teflon tape to the 1/2" NPT threads of supply line and thread union adaptor onto supply line with 10 mm Allen wrench.

Warning: Do Not over tighten the union adaptor. It will cause improper stress inside material and lead to fracture over time.

Then tighten up the Hex nut with wrench.

Warning: Do Not Over Tighten.

3

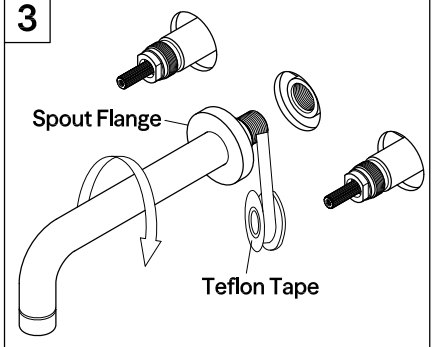

3. After inserting the spout flange, apply Teflon tape to spout and thread spout onto valve body. Turn the spout clockwise by hand to connect with valve body. Make sure it is tightly connected, then adjust slightly to ensure the spout outlet is facing down. Apply silicone based caulking to the back of the flange and press against the wall.

4

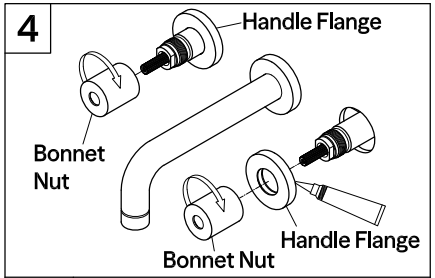

4. After applying silicone based caulking to the back of the handle flanges insert onto valve body and push completely to the wall, and thread bonnet nut onto valve assembly.

5-A For Lever Handles:

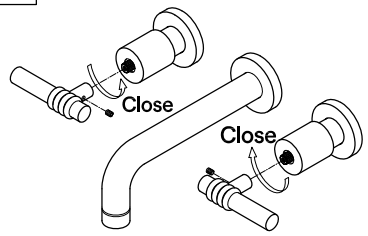

5-A. For Lever Handles:
Turn both the stems to their close positions. The stem on cold side should be turned clockwise, and the stem on hot side counter-clockwise. Then insert lever handles onto stems and make sure both cold/hot handles are aligned and horizontal.
Tighten up the screws to secure the handle on stems.

5-B For Cross Handles:

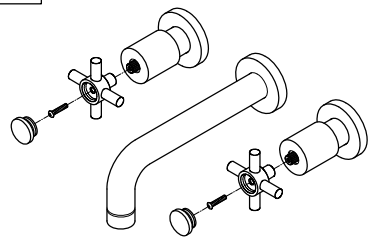

5-B. For Cross Handles:
Insert cross handles and secure the screws onto valve stem, insert valve cap and press firmly.

6

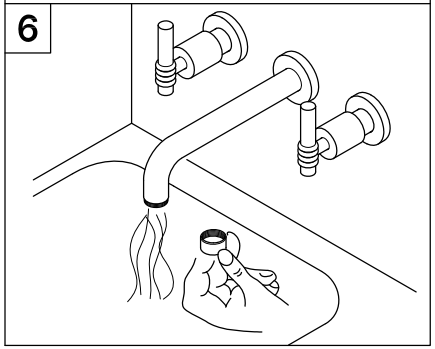

6. Remove aerator and turn on both hot and cold valves, this will clear any debris left in the line, reinstall aerator. Turn on/off both handles to open and close water at least 1 minute and make sure no water leakage on the valve body or any connection.

Warning!!!

- Do not over-tighten nut during installation.
- Over-tighten may crack the valve and cause severe leak.

©2025 LVC Kingston LLC. All Rights Reserved.
2025-05-D