DREO

# Portable Air Conditioner
AC318S/AC319S

## USER MANUAL

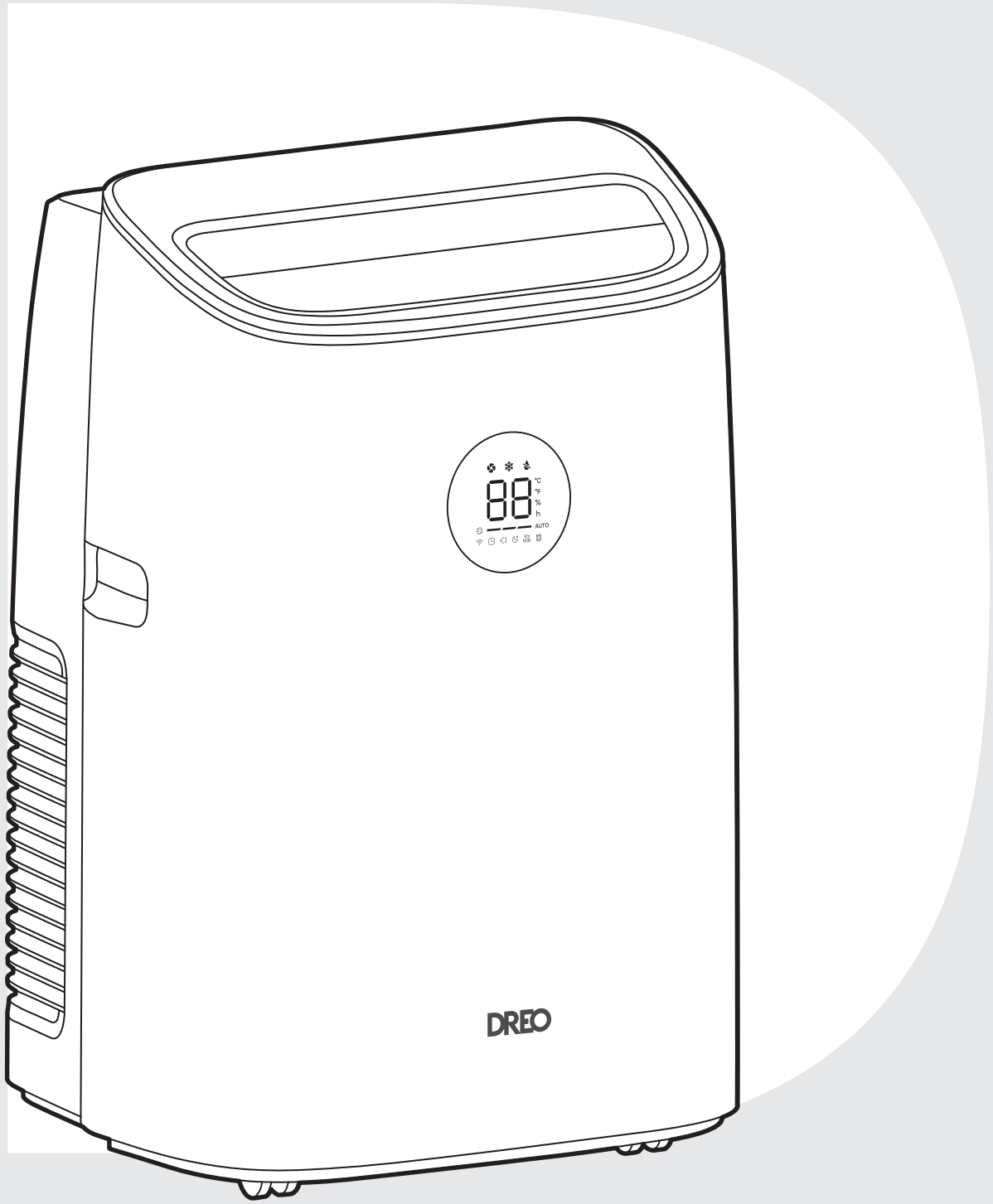


A2L

# Thanks for Choosing DREO!

Your support means the world to us. We hope you enjoy our product as much as we did creating it.

# EXTEND YOUR WARRANTY FOR FREE

Scan or visit **dreo.com/warranty**
To extend your warranty for free by registering your product. If you have any product issues, we always stand ready to help.

support@dreo.com
www.dreo.com
(888) 290-1688
Mon - Fri, 9:00 am-5:00 pm PST/PDT

# CONTENTS


01
IMPORTANT SAFETY INSTRUCTIONS
1-4

02
ASSEMBLING YOUR AIR CONDITIONER
5-9

03
CONNECTING TO YOUR AIR CONDITIONER
10

04
KNOWING YOUR AIR CONDITIONER
11-12

05
USING YOUR AIR CONDITIONER
13-15

06
CLEANING AND MAINTENANCE
16-19

07
TROUBLESHOOTING
20-22

08
DREO CUSTOMER CARE
23

# IMPORTANT SAFETY INSTRUCTIONS

# 01

**DANGER**

**DANGER** - This symbol indicates immediate hazards which WILL result in severe personal injury or death

**WARNING**

**WARNING** - This symbol indicates hazards or unsafe practices which COULD result in severe personal injury or death

**CAUTION**

**CAUTION** - This symbol indicates hazards or unsafe practices which COULD result in minor personal injury

**WARNING** When using electrical appliances, basic safety precautions should be followed, including the following

## General Safety

1. To reduce risk of injury, read this guide before using the appliance.
2. This appliance is not intended for use by persons (including children) with reduced physical sensory or mental capabilities or lack of experience & knowledge, unless they have been given supervision or instruction concerning the use of the appliance by a person responsible for their safety.
3. Children should be supervised to ensure that they do not play with the appliance.
4. Always unplug the air conditioner before servicing or moving the unit.

## Electrical Safety

1. Air conditioner must be connected to proper electrical outlet with the correct electrical supply.
2. Proper grounding must be ensured to reduce the risk of shock and fire. DO NOT CUT OR REMOVE THE GROUNDING PRONG. If you do not have a three-prong electric receptacle outlet in the wall, have a certified electrician install the proper receptacle. The wall receptacle MUST be properly grounded.
3. DO NOT USE AN ADAPTER OR AN EXTENSION CORD.
4. Do not place any object on the top of the unit.
5. If the SUPPLY CORD is damaged, it must be replaced by the manufacturer, a service agent or similarly qualified persons in order to avoid a hazard.
6. The air conditioner shall be installed in accordance with national wiring regulations.

## Operation Safety

1. Do not use the air conditioner near a bathtub, shower or wash basin.
2. Never operate the air conditioner without filters in place.
3. Do not operate air conditioner if power cord is frayed or otherwise damaged. Avoid using it if there are any cracks or abrasion damage along the length, plug connector or if the unit malfunctions or is damaged in any manner. Contact an authorized service technician for examination, repairs or adjustments.
4. Do not block airflow around the air conditioner. The exhaust hose should be free of any obstructions.
5. Do not install or use the air conditioner in any area where the atmosphere contains combustible gases or where the atmosphere is oily or sulphurous. Avoid any chemical coming in contact with your air conditioner.

# Handling Alkaline Batteries

**⚠ WARNING**

When handling alkaline batteries, basic safety precautions should be followed, including the following

1. Should fluid from the battery accidentally get into your eyes, there is a threat of loss of eyesight, do not rub them. Immediately rinse your eyes with clean tap water and then consult a physician immediately.
2. Do not put the battery in a fire, expose it to heat, dismantle or modify it. If the insulation or safety valve is damaged, the battery may leak fluid, overheat or explode.
3. Do not insert the battery with the poles reversed. Doing so may cause some abnormality or a short and the battery may leak fluid, overheat or explode.
4. Keep the battery out of the reach of children. If the battery is swallowed, contact a physician immediately.
5. If the alkali fluid gets in your mouth, rinse your mouth with water and contact a physician immediately.
6. If the alkali fluid gets on your skin or clothes, it may burn your skin, thoroughly rinse the affected area with tap water.
7. Do not mix new and old batteries or other makes of batteries. The different attributes may cause the battery to leak fluid, overheat or explode.
8. This battery was not made to be recharged. Recharging this battery may damage the insulation or internal structure and may cause the battery to leak fluid, overheat or explode.
9. Do not damage or remove the label on the exterior of the battery. Doing so may cause the battery to short, leak fluid, overheat or explode.
10. Do not drop, throw or expose the battery to extreme impact. Doing so may cause the battery to leak fluid, overheat or explode.
11. Do not alter the shape of the battery. If the insulation of safety valve is damaged, the battery may leak fluid, overheat or explode.
12. Immediately remove batteries when they have lost all power. Leaving the batteries in the unit for a long time may cause the batteries to leak fluid, overheat or explode due to gas that is generated by the batteries.
13. Remove the batteries from the unit when not using the unit for an extended period of time. The batteries may leak fluid, overheat or explode due to gas that is generated by the batteries.
14. Do not apply solder directly to the batteries. The heat may cause the batteries to leak fluid, overheat or explode.
15. Do not get the batteries wet. Doing so may cause the batteries to overheat.
16. Store batteries someplace out of direct sunlight where the temperature and humidity are not high. Not doing so may cause the batteries to leak fluid, overheat or explode. Also, it may cause the life and performance of the batteries to decline.
17. Follow the regulations of the local government when disposing of these batteries.
18. NEVER mix alkaline, standard (carbon-zinc), rechargeable (nickel-cadmium) batteries with this product.

# Grounding Instructions

**ELECTRICAL REQUIREMENTS**

In the event of malfunction or breakdown, grounding provides a path of least resistance for electric current to reduce the risk of electric shock. The appliance must be connected to a cord having an equipment-grounding conductor and a grounding plug. The plug must be plugged into an appropriate outlet that is properly installed and grounded in accordance with all local codes and ordinances.

⚠ **DANGER** - Improper connection of the equipment grounding conductor can result in a risk of electric shock. The conductor with insulation having an outer surface that is green with or without yellow stripes is the equipment grounding conductor. If repair or replacement of the cord or plug is necessary, do not connect the equipment-grounding conductor to a live terminal. Check with a qualified electrician or service person if the grounding instructions are not completely understood, or if in doubt as to whether the appliance is properly grounded. Do not modify the plug connected to the appliance - if it will not fit the outlet, have a proper outlet installed by a qualified electrician.

# FOR GROUNDED, CORD-CONNECTED APPLIANCE RATED LESS THAN 15A AND INTENDED FOR USE ON A NOMINAL 115V SUPPLY CIRCUIT

The appliance is for use on a nominal 115V circuit and should be connected to a grounding outlet that looks like the one illustrated below.
The use of a temporary adapter is not recommended.

## LCDI POWER CORD AND PLUG

This air conditioner is equipped with an LCDI (Leakage Current Detection and Interruption) power cord that is required by UL. This power supply cord contains state-of-the-art electronics that sense leakage current. If the cord is damaged and leakage occurs, power will be disconnected from the unit.
The test and reset buttons on the LCDI Plug are used to check if the plug is functioning properly.

⚠ **WARNING:** TEST LCDI before each use.
To test the plug:
1.Plug power cord into a grounded 3-prong outlet.
2.Press RESET (on some units a green light will turn on).
3.Press the TEST button,the circuit should trip and cut all power to the air conditioner (on some units green light may turn off).
4.Press the RESET button for use. You will hear a click and the A/C is ready for use.
5.The power supply cord must be replaced if it fails to trip when the TEST button is pressed and the unit fails to reset.

**NOTE:**
- Do not use this device to turn the unit on or off.
- Always make sure the reset button is pushed in for correct operation.

⚠ **WARNING:**
- The power supply cord must be replaced if it fails to reset when either the test button is pushed, or it cannot be reset.
- If power supply cord is damaged, it cannot be repaired.
- It must be replaced by one obtained from the product manufacturer.

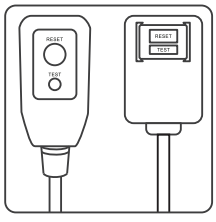


⚠ **WARNING- RISK OF FIRE**
It is important the plug fits tightly into the wall outlet.
If the plug does not fit securely and appears loose, it should not be used.
Have a licensed electrician replace the receptacle.

## SAFETY GUIDELINES

⚠ **WARNING:** To prevent injury to the user or other people and property damage, the following instruction must be followed. Incorrect operation due to ignoring of instructions may cause harm or damage.
- Your air conditioner should be used in such a way that it is protected from moisture. E.g. condensation, splashed water, etc. Do not place or store your air conditioner where it can fall or be pulled into water or any other liquid. Unplug immediately.
- Always transport your air conditioner in a vertical position and stand on a stable, level surface during use.
- Turn off the product when not in use.
- Always use the switch on the control to start or shut off the unit.
- Always contact a qualified person to carry out repairs. If the supply cord is damaged it must be repaired by a qualified technician.
- Keep an air path of at least 12 inches all around the unit from walls, furniture and curtains.
- If the air conditioner is knocked over during use, turn off the unit and unplug from the power supply immediately.
- Do not operate your air conditioner in a wet room such as a bathroom or laundry room.
- Do not touch the unit with wet or damp hands or when barefoot.
- Do not press the buttons on the control panel with anything other than your fingers.
- Do not remove any fixed covers. Never use this appliance if it is not working properly, or if it has been dropped or damaged.

- Never use the plug to start and stop the unit.
- Always use the switch on the control panel to start or shut off the unit.
- Do not cover or obstruct the inlet or outlet grilles.
- Do not use hazardous chemicals to clean or come into contact with the unit. Do not use the unit in the presence of inflammable substances or vapor such as alcohol, insecticides, petrol, etc.
- Do not allow children to operate the unit unsupervised.
- Do not use this product for functions other than those described in this instruction manual.
- Locate the unit where furniture cannot obstruct the air flow.
- Keep blinds/curtains drawn.
- Keep the filters clean.
- Keep doors and windows closed to keep cool air in and warm air out.




Caution: Risk of fire/
flammable materials
(Required for R32/R290 units only)



IMPORTANT NOTE: Read this manual carefully before installing or operating your new air conditioning unit. Make sure to save this manual for future reference.

EXPLANATION OF SYMBOLS DISPLAYED ON THIE UNIT

| | | |
|---|---|---|
|  | **WARNING** | This symbol shows that this appliance used a flammable refrigerant. If the refrigerant is leaked and exposed to an external ignition source, there is a risk of fire. |
|  | **CAUTION** | This symbol shows that the operation manual should be read carefiully. |
|  | **CAUTION** | This symbol shows that a service personnel should be handling this equipment with reference to the installation manual. |
|  | **CAUTION** | This symbol shows that information is available such as the operating manual or installation manual. |

## Specifications

| | |
|---|---|
| **Model No.** | DR-HAC008S / DR-HAC009S |
| **Rated Voltage** | 115V/60Hz |
| **R32** | 205g (7.225 Oz.) |

# ASSEMBLING YOUR AIR CONDITIONER

# 02

6H Please keep the air conditioner upright for at least 6 hours before using the unit for the first time.

## Package Contents

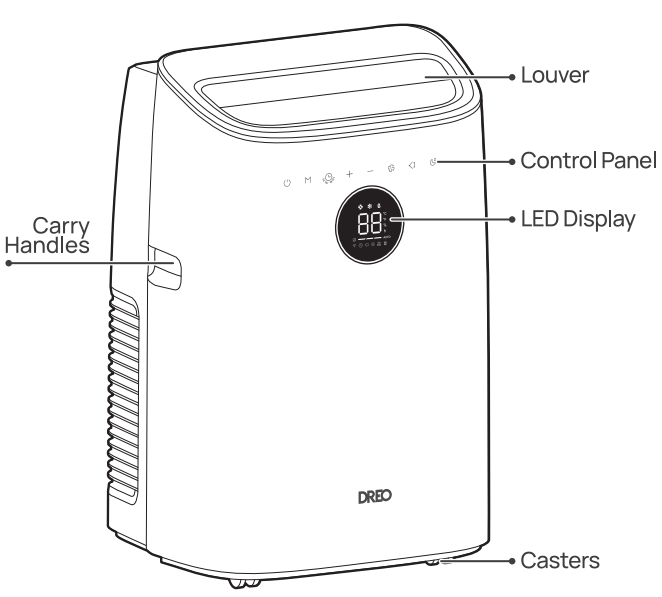


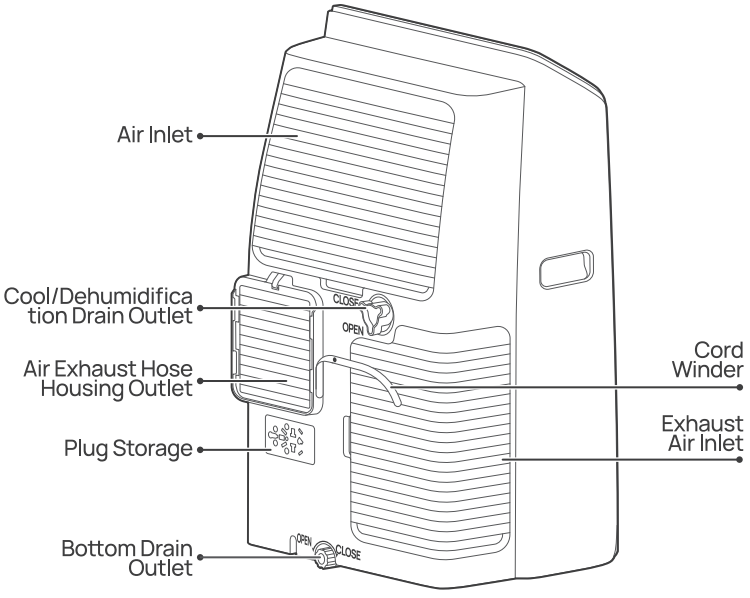


## Accessories

| | | |
|---|---|---|
| 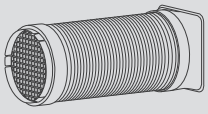 Air Exhaust Hose<br>Hose Diameter: 5.9-inches<br>Hose Length: 6.5 ft. |  Butterfly Bolt | 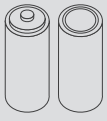 Remote Control Battery |
| 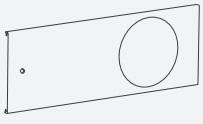 Window Panel (A) | 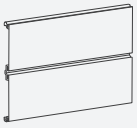 Window Extension Panel (B) |  Window Extension Panel (C) |
| 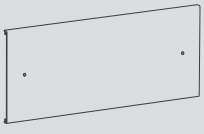 Window Extension Panel (D) | 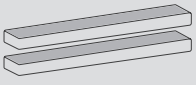 Long Foam Seal |  Long Foam Seal |
|  Drain Hose x 1 |  Remote Control | |

# Getting Started

## 1.Preparing the Window Panel

Standard maximum and minimum window openings:
MAXIMUM: 53" (134.6 cm)
MINIMUM: 18" (45 cm)

| Hung Window | Sliding Window |
|---|---|
| 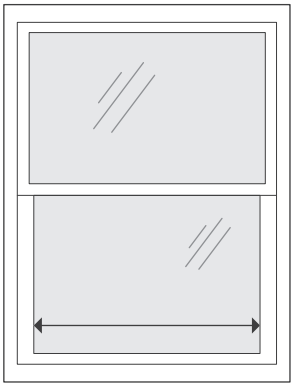 Measure the width between the frames of the opened window. Suitable for: 18"-53" | 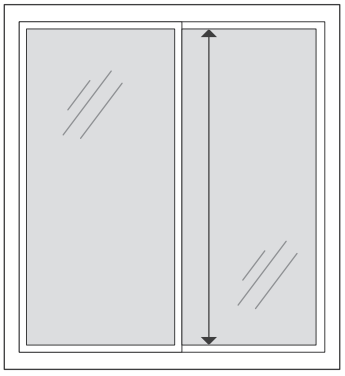 Measure the height between the frames of the opened window. Suitable for: 18"-53" |

**Prepare the corresponding panels to use according to your window opening size:**

| Window Opening Size | Panels to Use | | | |
|---|---|---|---|---|
| | Extension Panel A | Extension Panel B | Extension Panel C | Extension Panel D |
| 18" | ✓ | | | |
| 18.1"-24.8" | ✓ | ✓ | | |
| 24.8"-33" | ✓ | | ✓ | |
| 33"-46.5" | ✓ | | ✓ | ✓ |
| 46.5"-53" | ✓ | ✓ | ✓ | ✓ |

Note:
- For openings smaller than 18" proceed to measure and cut the panel A to fit the opening.
- For openings larger than 53" contact DREO customer support.

**Extension Panel Assembly**

**Align the back side slot with the panel's butterfly bolt.**

Note: The butterfly bolt must be inserted in the backside slot before installing the panel on the window.

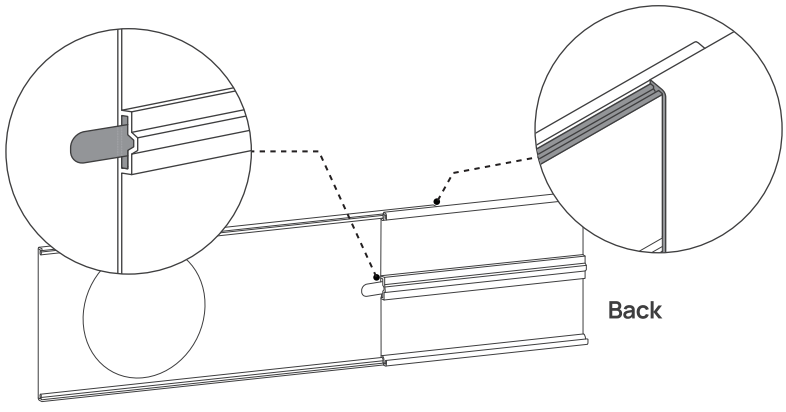

## 2.Installing the Adhesive Foam Seals(Included inside the air conditioner hose)

Cut the adhesive foam seals to proper lengths, peel the back side and attach them to the window frame and sash as shown.

Note: It is recommended to use non-adhesive foam for the bottom part of the frame.

| Hung Window | Sliding Window |
| --- | --- |
| 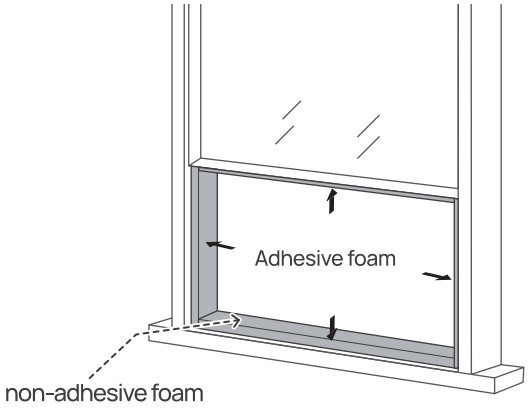 | 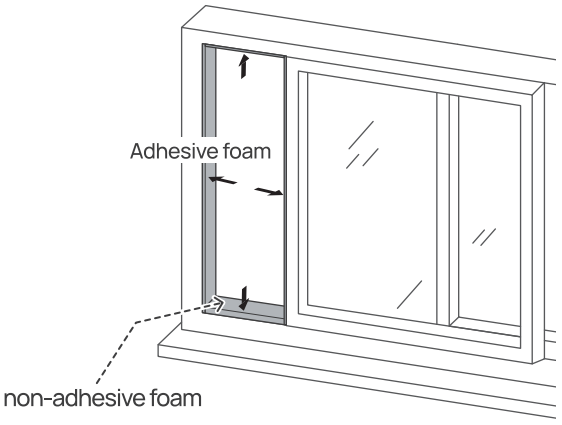 |

## 3.Installing the window panel

Place the panel on the window and adjust the extension according to the opening length.

Look at the panels marking to make sure they are facing the interior when installing them.

| Hung Window | Sliding Window |
| --- | --- |
| 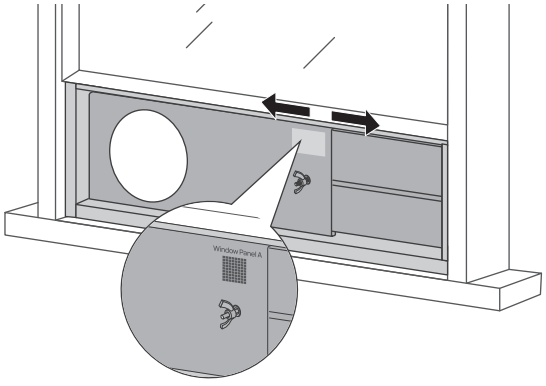 | 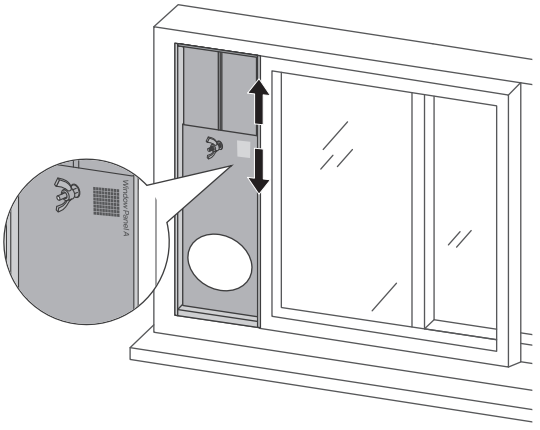 |

**Note:** Make sure both panels are facing the front. You can add adhesive foam around the panel for a more secure fit into the window.

## 4.Securing the extension panel

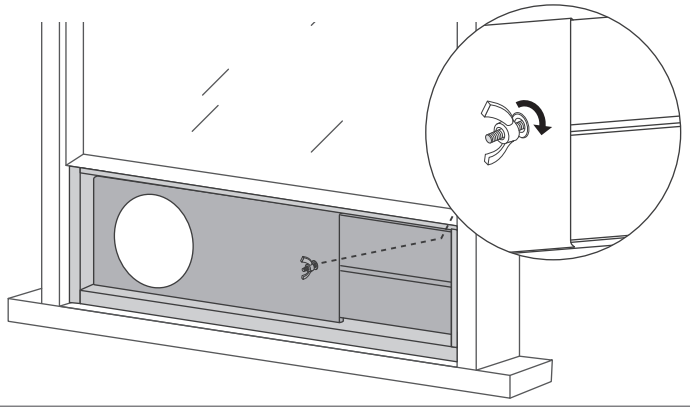

Secure the panels by tightening the butterfly bolt.

## 5.Installing Non-Adhesive Foam Seals

Cut a non-adhesive foam seal to proper size and seal gaps to prevent air and insects from getting into the room.

| Hung Window | Sliding Window |
| --- | --- |
| 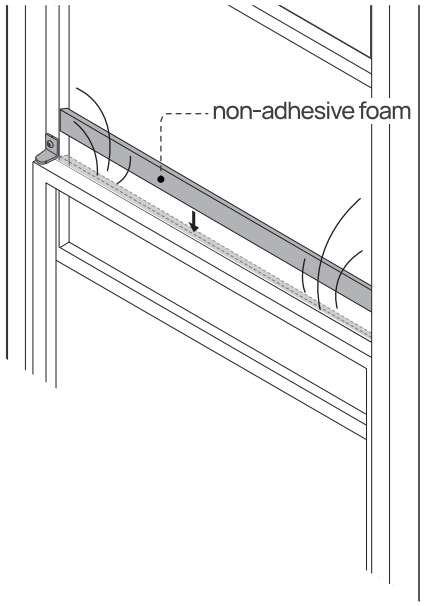 | 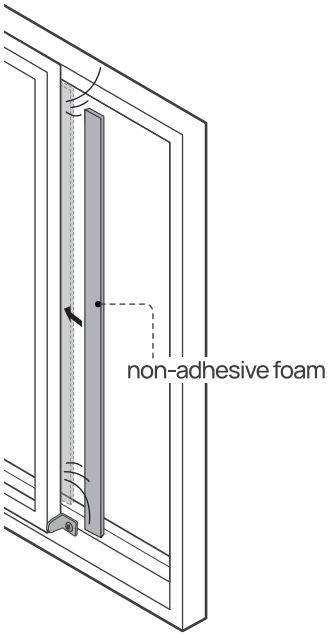 |





## 6.Attaching the Hose to the Air Conditioner

Align the hose inlet with the slots over the air exhaust housing outlet to assemble.

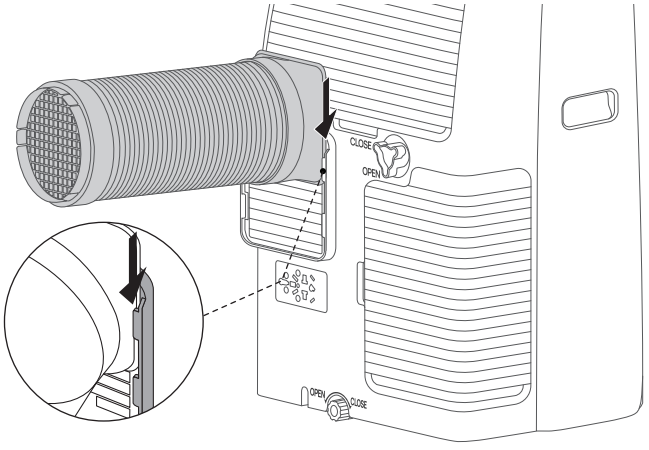



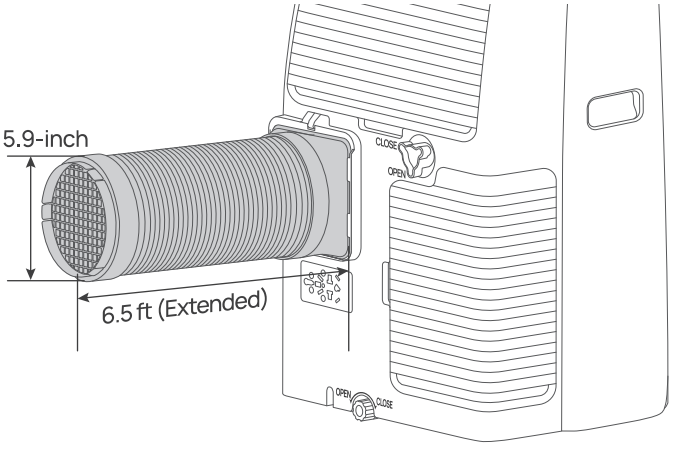



To ensure optimum performance, DO NOT overextend or bend the hose.
Place the air conditioner at least 20" away from windows Do not cover or place objects against the air conditioner.



## 7.Attaching the Hose to the Window

Attach the vent hose to the cutout on the window panel.

| Hung Window | Sliding Window |
| --- | --- |
| 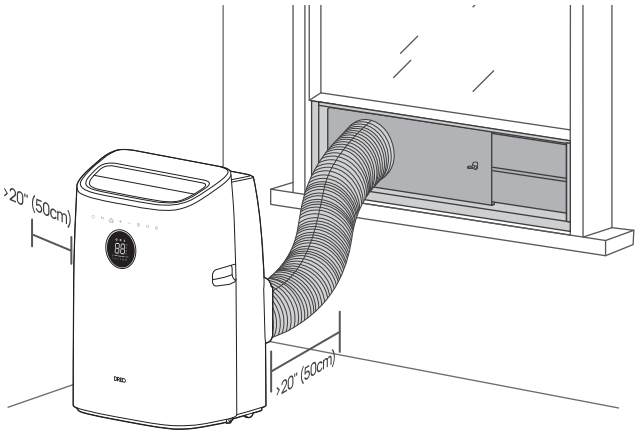 | 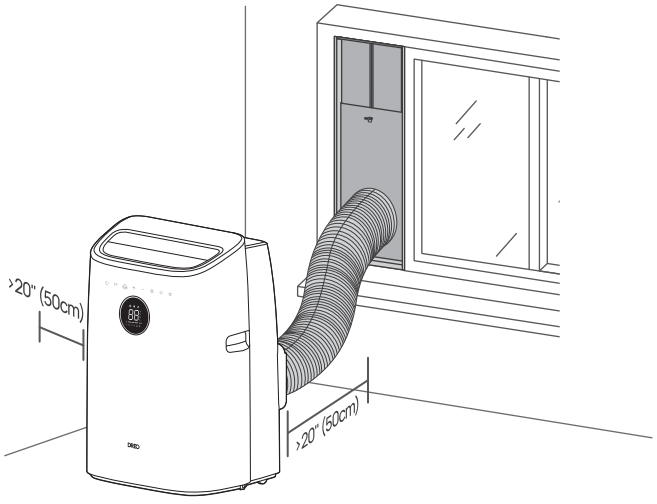 |

# CONNECTING TO YOUR AIR CONDITIONER

# 03

Before connecting the appliance to your mobile device, please scan the QR code on the left or go to the app store and search "DREO", then select and download the app. This device includes the radio transmitting module whose CMIIT ID is FCC ID: 2A3SYHAC008

Download on the App Store

GET IT ON Google Play

Look for **"AC318S/AC319S"** when connecting your new air conditioner.

You can use the DREO app to connect your smart air conditioner to Amazon Alexa or Google Home. Please follow the in-app instructions to set up your voice assistant.
**Note:** You must create a DREO account to access voice assistants.




Launch DREO and sign in or create an account by following in-app instructions. 1

Enable Bluetooth on your mobile device and plug in your air conditioner. 2




Hold the Timer button 5s for WiFi for 5 seconds to start WiFi connection settings.
(Tip: The WiFi icon will keep flashing while pairing.) 3

Tap +Add Device and select AC318S/AC319S. 4



Follow in-app instructions to complete WiFi connection. 5

You're now ready to control the appliance on your app. 6

# KNOWING YOUR AIR CONDITIONER

# 04

## Control Panel



**Power Button**
- Turn on/off the appliance.
- Long press for 5s to restore factory settings.



**Mode Button**
- Switch between Cool, Only and Dry (dehumidify) modes.




**Timer Button**
- Select to set a timer (0-12h)
- Long press for 5s to start network settings and device pairing



**Increase (+) and Decrease (-) Buttons**
- Select to increase or decrease temp/timer.
- Press ⊖ and ⊕ simultaneously for 3s to switch between Fahrenheit and Celsius.



**Fan Speed Button**
- Adjust airflow speed between low, mid, high and auto.

LOW
MID
HIGH
AUTO AUTO

- The speed indicator changes according to the actual fan speed.
- Long press for 5s to reset the filter life indicator. The filter indicator light will turn off briefly.

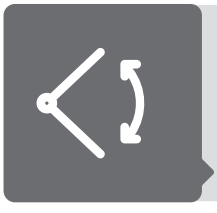

**Swing Louver Button**
- Sets the air discharge louvers to oscillate up and down.
- Long press for 5s to activate/deactivate the Child Lock function (Display will show "LC" when activated)



**Sleep Function Button (Only available in Cool Mode)**
- Turns Sleep Function on/off
- Long press for 5 seconds to turn on/off the ECO Function
- Sleep Function automatically turns off after 8 hours.
- All beep sounds, and the LED display are turned off. You can wake up the screen by touching any button.
- In Sleep function, target temperature increases in stages (2°F for every hour, up to 86°F) to compensate body temperature loss during sleep.

## LED Display

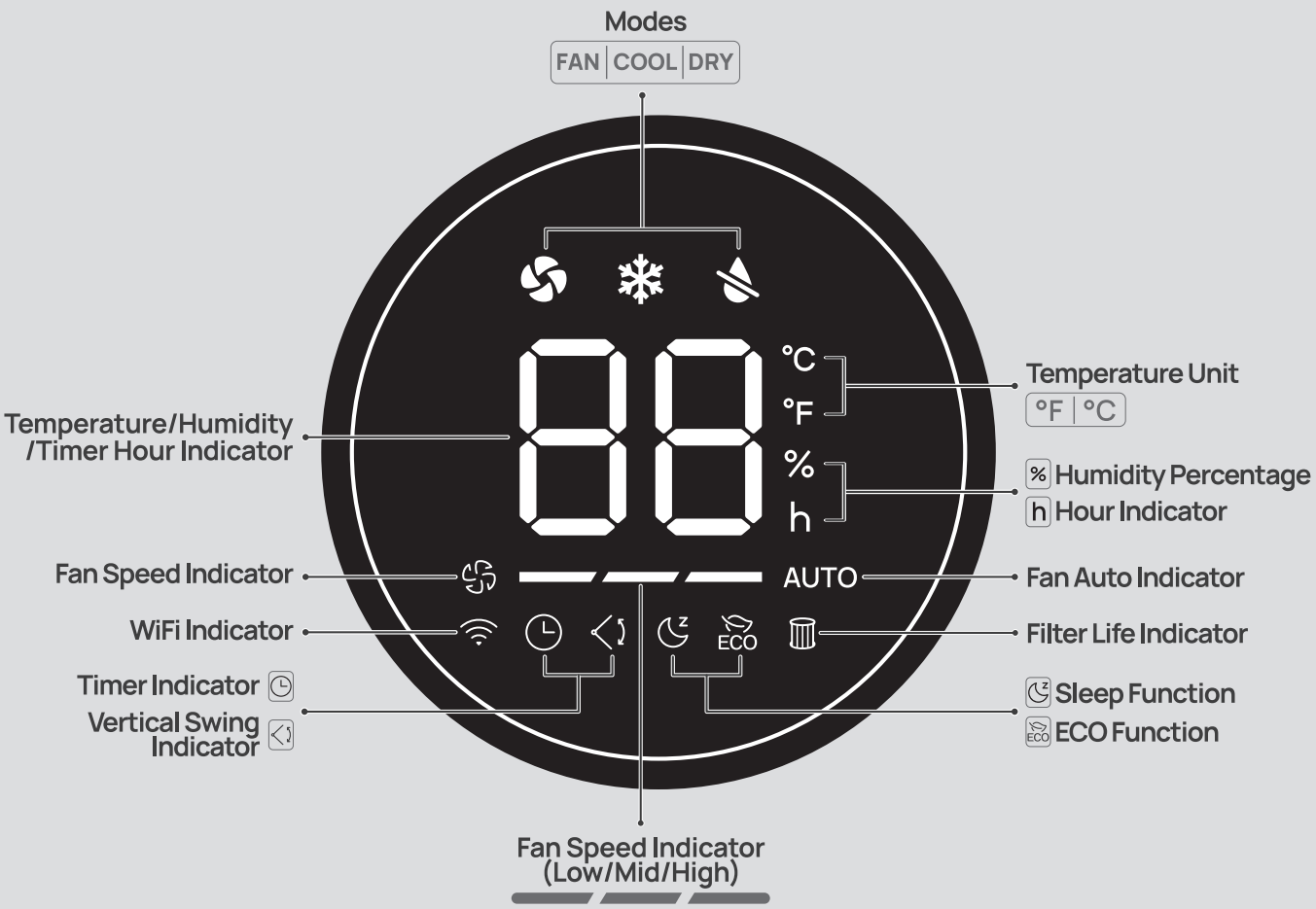
Modes
FAN | COOL | DRY
°C
°F
%
h
AUTO
ECO
Temperature/Humidity /Timer Hour Indicator
Temperature Unit
°F | °C
Humidity Percentage
Hour Indicator
Fan Speed Indicator
Fan Auto Indicator
WiFi Indicator
Filter Life Indicator
Timer Indicator
Vertical Swing Indicator
Sleep Function
ECO Function
Fan Speed Indicator (Low/Mid/High)

# USING YOUR AIR CONDITIONER 05

## Working Modes

### Cool Mode (61°F to 86°F)

- Fast cooling with customizable temperature and fan speed.
- You can select your target room temperature by touching ⊕ or ⊖ .
- The fan speed can be customized by touching ❄ and choosing between: Low/Mid/High/Auto

### Fan Only

- The air conditioner blows air into the room.
- Choose between four different fan settings (Low, Mid, High, Auto)
- Temperature cannot be adjusted in Fan Mode.

### Dry (RH 30%-80%)

- Reduces room relative humidity.
- Default humidity set to 60%.
- You can set target humidity from 30% to 80% (5% increments).
- Keep windows and doors closed for the best dehumidifying effect.
- Fan speed changes automatically and cannot be adjusted.
- In Dry Mode, please remove the cover and attach a drain hose to the main drain outlet, and place a bucket at the other end for water drainage.

### ECO (61˚F to 86˚F)

- ECO function is only effective in cooling scenarios.
- Press the Sleep Function Button for 5 s to activate/deactivate the ECO function.
- Set target temperature from 61˚F to 86˚F by touching ⊕ or ⊖ .
- Choose from different saving percentage options through the DREO app.

### Sleep

- Sleep function is only available when using Cool Mode.
- Target temperature increases in stages (2°F for every hour, up to 86°F) to compensate body temperature lost during sleep.
- You can customize the temperature increase of every stage in the DREO app.
- You can select your target room temperature by touching ⊕ or ⊖ .
- All beep sounds, LED display are turned off. You can wake up the screen by touching any button.
- The louver swing will decrease to reduce noise.

## Additional Features

### Timer
When the air conditioner is ON/OFF, touch the timer button repeatedly to set a timer (1-12h). When the timer ends, the air conditioner will stop/start running automatically. To cancel, set the timer to 0 hour.

### Memory
If the air conditioner is turned OFF or connected to power, it will operate under the previous settings (except the timer setting) when it is turned ON again.

### Firmware Update
Check the firmware version on the Dreo app and update regularly for the air conditioner to work more efficiently.
Display will show "UP" during the update process. Do not operate until the update is completed.

### Child Lock
Long press for 5 seconds to activate/deactivate the Child Lock function, when activated, the display will show "LC", and all the buttons on the air conditioner will be locked.

### Temperature Unit Switch
°F °C
Long press the ⊕ and ⊖ to switch the temperature units displayed in your air conditioner.

## Remote Control

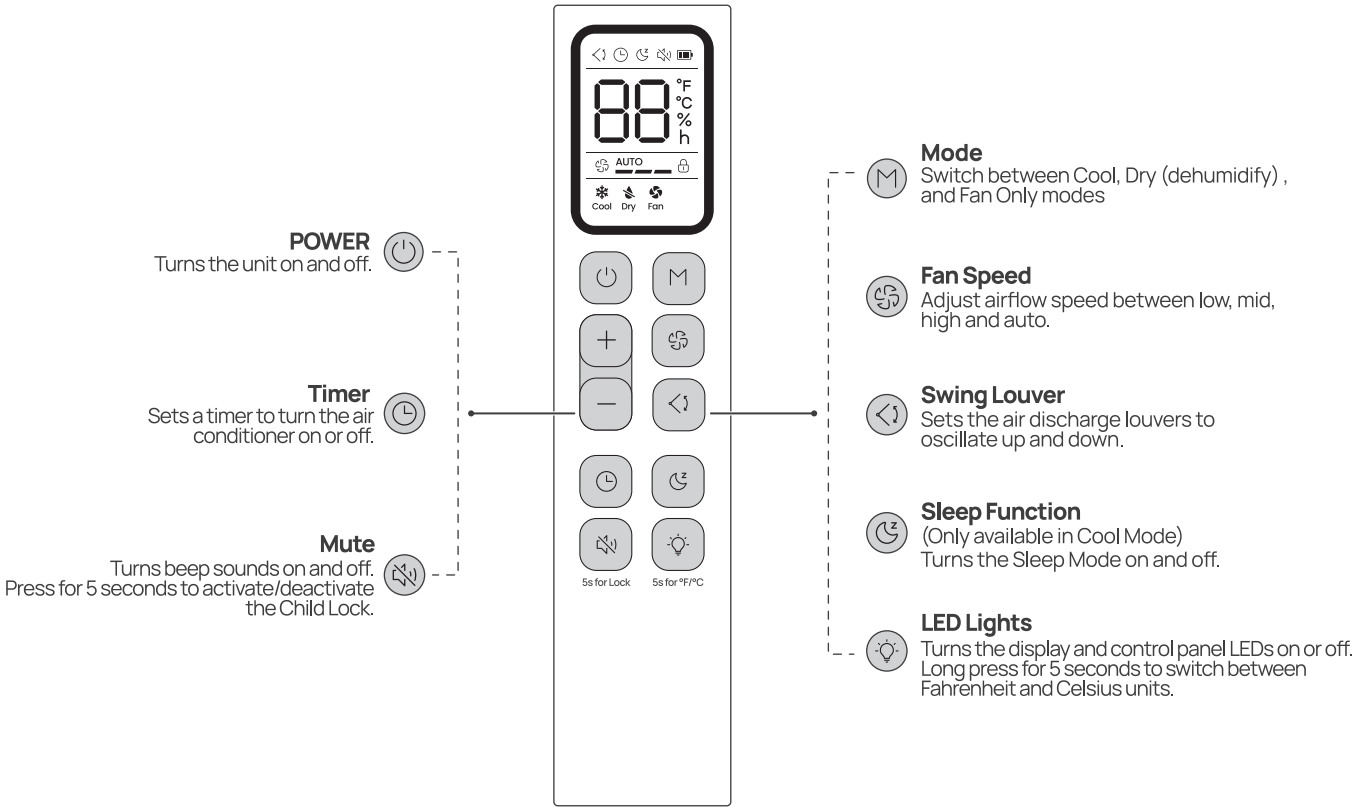


NOTE:
Use the remote control within 26 ft. From the unit, ideally in less than 45°angle

## Indicators

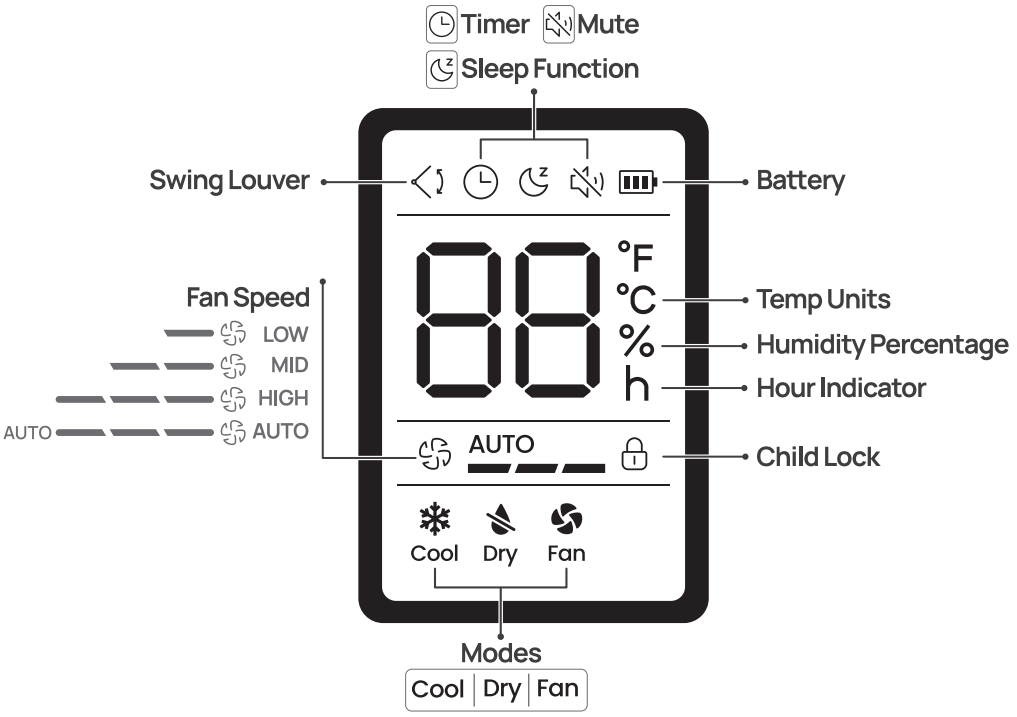


## Battery Replacement

Your air conditioner may come with two batteries. Put the batteries in the remote control before use.

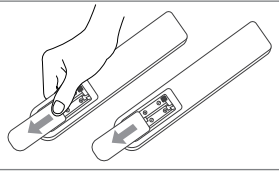

1.Slide the back from the remote control downward, exposing the battery compartment.
2.Insert the batteries, paying attention to match up the (+) and (-) ends of the batteries with the symbols inside the battery compartment.
Slide the battery cover back into place.

## ⚠ WARNING

· Replace with new batteries of the same type when replacement is required.
· Remove the batteries when the remote control is unused for long period of time.
· Do not attempt to dismantle the batteries.
· Do not dispose the batteries in fire, batteries may explode or leak.
· Chemical burn hazard. Keep batteries away from children.
· Do not mix old and new batteries and Do not mix alkaline, standard (carbon-zinc) or rechargeable (ni-cad, ni-mh, etc.) batteries.



## ⚠ CAUTION

Airflow Direction Adjustment
The louver can be adjusted automatically. Adjust the airflow direction automatically;
- When the power is ON, the louver opens fully.
- Press the Swing Louver button on the panel or remote controller to initiate the Auto swing feature. The louver will swing up and down automatically.
Please do not adjust the louver manually.

# CLEANING AND MAINTENANCE 06

**WARNING**

- Always turn off and unplug the appliance before cleaning or servicing.
- DO NOT use flammable liquids or chemicals to clean the appliance.
- DO NOT wash the appliance under running water. Doing so causes electrical danger.
- DO NOT operate the appliance if the power supply was damaged during cleaning.
- A damaged power cord must be replaced with a new cord from the manufacturer.

## Outer Surface Cleaning

Clean the outer surface using a damp, lint-free cloth and mild detergent. Dry the appliance with a dry, lint-free cloth.

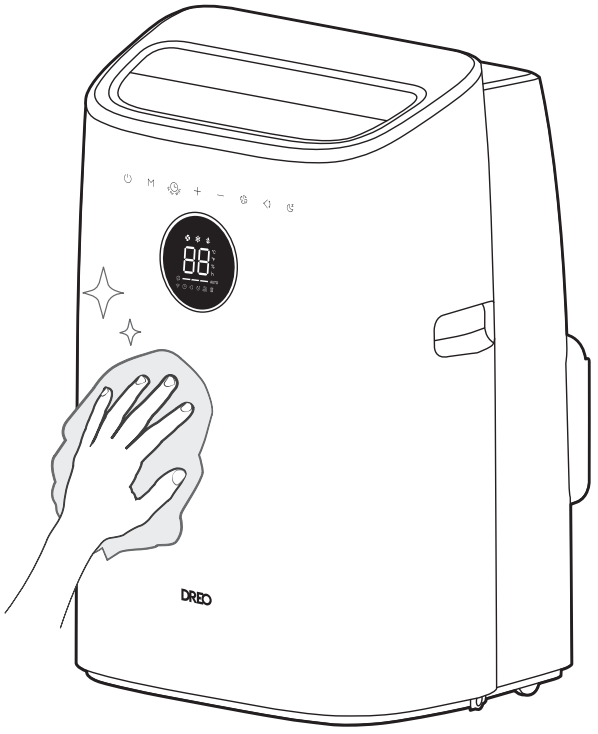


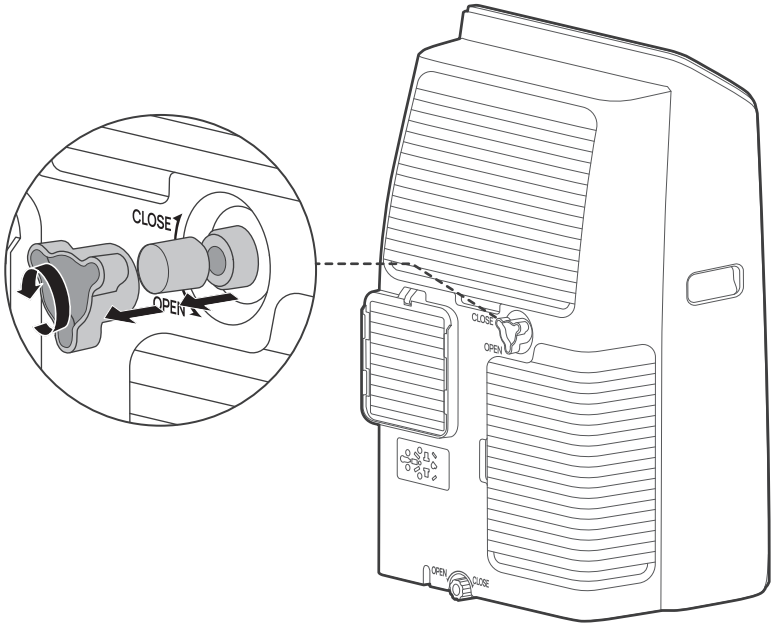


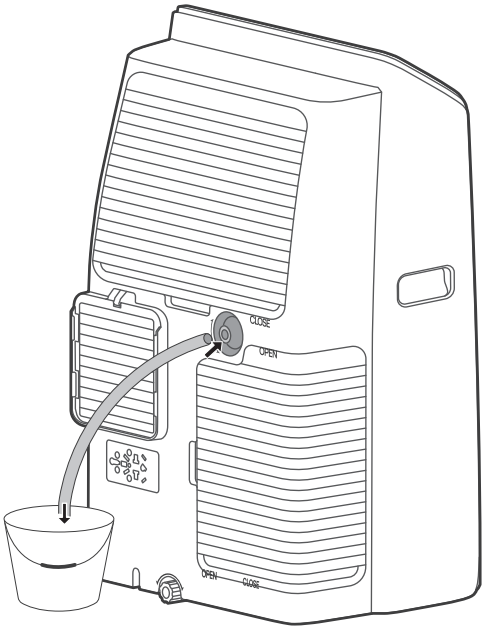

# Water Drainage

Your air conditioner has a built-in evaporator so the water compartment would not typically fill unless there is high humidity in the environment.

## Intermittent & P1 Drainage

1. Unplug the unit and carefully move it to a drain area or use a drip pan (not included). (It is recommended to place the unit on a higher level than the drip pan).

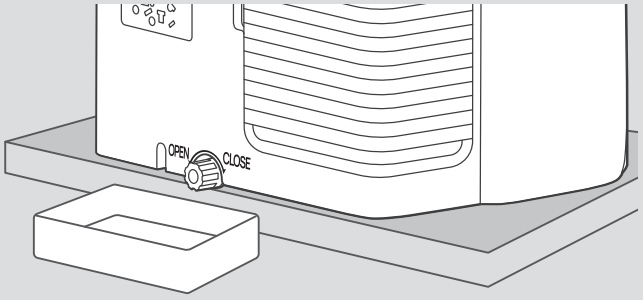


2. Remove the bottom drain cap.

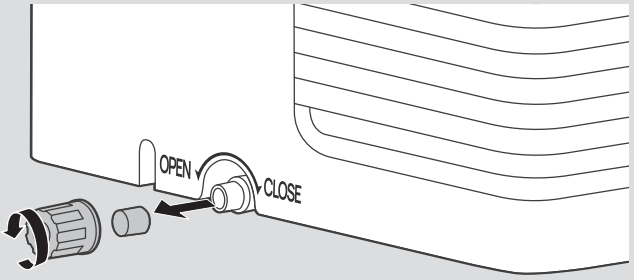


3. Let the water drain until the water reservoir is empty, then replace the drain cap. Restart the machine. If the error code repeats. Call for service.

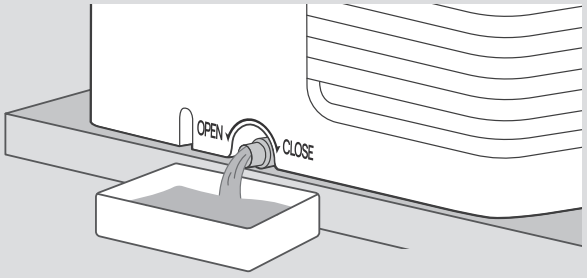


## Continuous Drainage

When using Dry mode, you will need a hose to drain the condensed water from the unit. Follow the steps below:

1

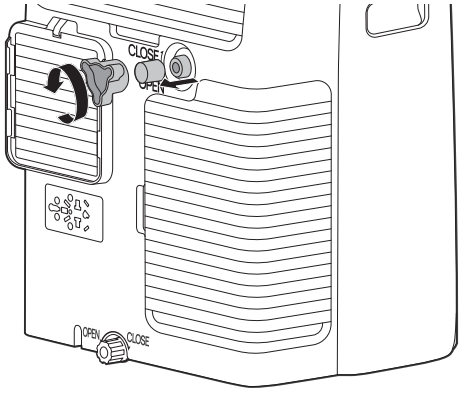


Unscrew the main drain outlet cap

Note: Use a drip pan when opening the outlet cap to avoid wetting floors.

2

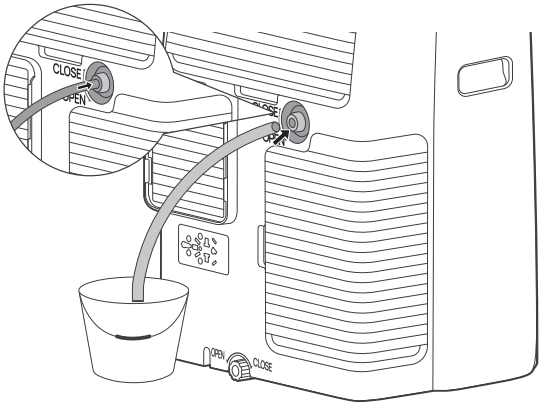


Connect the hose to the main drain outlet then lead the other end into a drain that is lower than the unit.

**NOTE**

- Condensate may leak out after removing the drain cap, if the unit is running in Cool or ECO function. Make sure to prepare a drip tray (not included) to collect the leakage.
- Make sure that the height of the drain and section of the drain hose should not be higher than that of the drain outlet, or the continuous drainage may not work properly.
- For maximum performance, during Cool or ECO function, it is recommended to disable continuous drainage by replacing the drain cap to the drain outlet.

## Air Filter Cleaning

**For better performance and less operational noise, clean the appliance filter at least once every two months.**

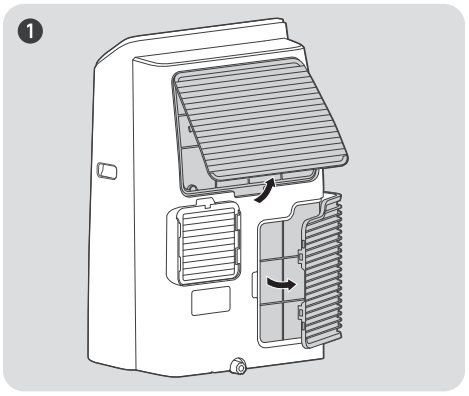


Remove both grills from the back of the unit.

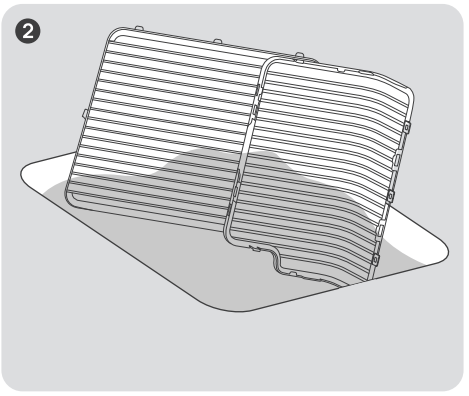


If there is stubborn dirt or dust, immerse in lukewarm water and rinse a couple of times.

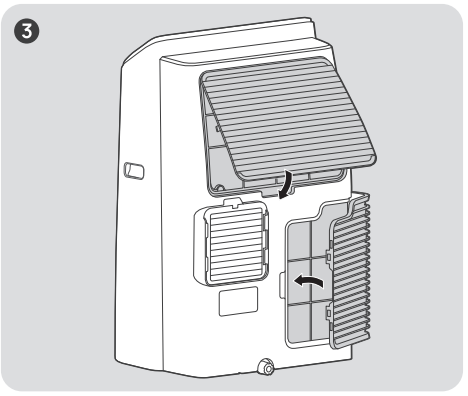


Let the filter dry before re-attaching to the main unit.

## Winter Storage

**If you are not using the air conditioner for a long period of time:**

- Drain any remaining water from the tank and leave both drain outlets open for enough time to allow all residual water to drain out.

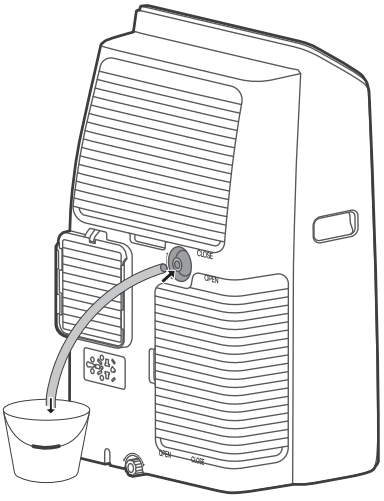


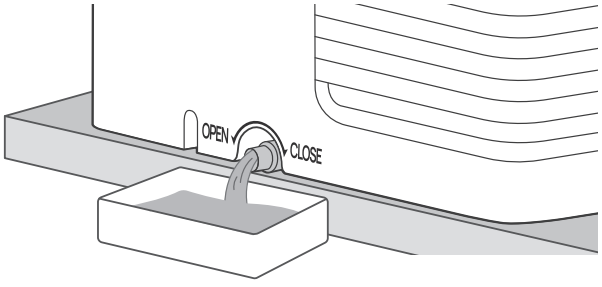


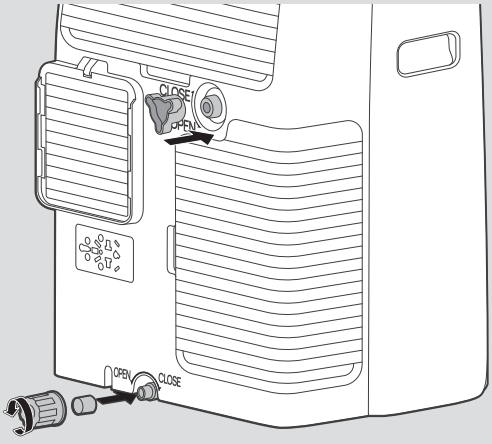


- Once the tank is completely drained close the main and backup drain outlet.

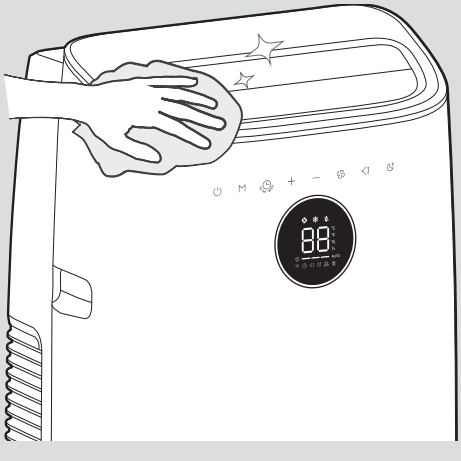

- Clean the louver

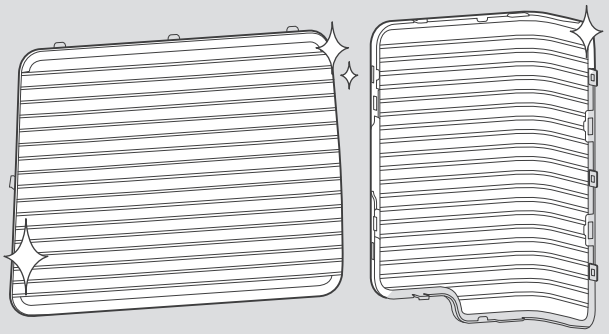

- Clean the filter and dry thoroughly before reinstalling.

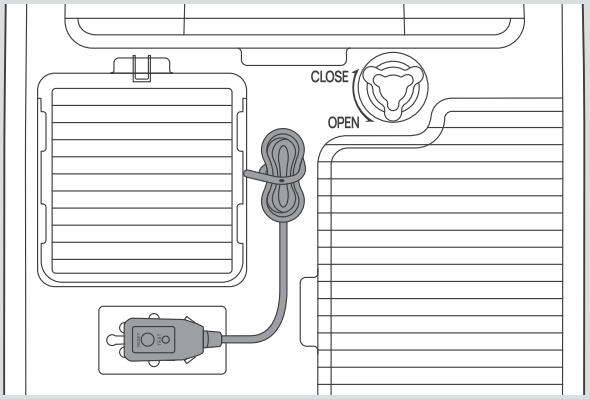


- Wrap around the cord using the plastic cord strip and plug it to the air conditioner outlet storage.




- Wrap the air conditioner in a plastic bag to prevent dust buildup decreasing its efficiency.

# TROUBLESHOOTING 07

| Problem | Possible Cause | Solution |
|---|---|---|
| My air conditioner is not working | Unit not plugged correctly | Make sure the unit is plugged firmly into the outlet. |
| | Plug Current Device tripped. | Press the RESET button. |
| | Room temperature is lower than the target temperature (Cool Mode). | Reset the temperature. |
| | P1 Protection Code | The water collection tray is full. Turn off your air conditioner, drain the water and restart the unit. |
| | E0/E1/E2 Error Codes | contact customer service (Page 23). |
| Unit does not cool well | The air filter is blocked with dust or animal hair | Turn off the unit and clean the filter according to instruction (see page 19) |
| | Exhaust hose is not connected or it is blocked | Turn off the unit, disconnect the hose, check for blockage and reconnect the hose. |
| | The windows and doors in the room are open | Make sure all windows and doors are closed. |
| | The unit is low on refrigerant | Contact customer service to inspect the unit and top off refrigerant. |
| Ice formed on the cooling coil behind the air outlet | Indoor temperature is below 60°F (16°C) | Change to FAN only mode. |
| | Air filter may be dirty. | Clean the filter and then set the air conditioner to FAN only mode. |
| The unit is noisy and vibrates too much | The air conditioner is not placed on a level surface. | Place the unit on a flat, level surface |
| | The air filter is blocked with dust or animal hair | Turn off the unit and clean the filter according to instructions |
| The unit makes a gurgling sound | Flow of refrigerant inside the unit | This is normal |

# INFORMATION FOR QUALIFICATIONS OF WORKERS

All operators or refrigeration system maintenance personnel shall have a valid certificate issued by an industry-recognized evaluation body to certify that they are qualified for the safe disposal of refrigerant agents as recognized by the industry;
- Maintain and repair equipment only in accordance with the method recommended by the equipment manufacturer. If other professionals are required to assist in the maintenance and reapair of equipment, do so under the supervision of personnel qualified to use combustible refrigerants.

| Class | Name | Classification of instructions | Personnel Qualification Requirements |
|---|---|---|---|
| A | Professional Maintenance Personnel | Personnel, such as installers and maintenance supervisors, who are required to install, repair, and weld the refrigeration system for flammable refrigerant products. | Hold A class certificate issued by the competent authority, available online. |
| B | egular contacts personnel | 1. Personnel who do not need to open the refrigeration system of combustible refrigerant products, such as relevant personnel of transportation enterprises and general maintenance personnel of conventional refrigerant products. | Hold a Class B certificate issued by the competent authority, available online. |
| C (The enterprise internal) | Develop, design and test personnel | Combustible refrigerant system design personnel, supervision personnel. | 1.Master the skills and knowledge of basic safety welding and safety protection level of combustible refrigerant:<br>2.Familiar with product development process and capable of design:<br>Qualification certification/recognition shall be conducted by the institution where you work. |

1. Personnel with class A certificate can carry out the operation of class B personnel;
2. Class A and Class B personnel shall be trained and certified by the industry management institution designated by the state;
3. C type personnel should participate in the company's internal organization of professional training, obtain internal issued certification or accreditation qualifications.

| Tooling names | Use requirement |
|---|---|
| Small vacuum pump | Explosion-proof vacuum pump: ensure a certain accuracy, vacuum degree should be less than 10Pa. |
| Filling equipment | Special explosion-proof charging equipment: with certain accuracy, the charging amount deviation is less than 5. |
| Leak detector | Regular calibration: annual leakage rate is not higher than 10g. |
| Concentration detector | A)The maintenance site shall be equipped with A fixed combustible refrigerant concentration detector, which shall be connected to the safety protection alarm system: its error must be guaranteed not to be higher than 5%.<br>B)The installation site shall be equipped with portable combustible refrigerant concentration detector, which can realize two-level acousto-optic alarm: its error must be guaranteed not to be higher than 10%.<br>C)Regular calibration.<br>Function check and confirmation shall be carried out before use. |
| Pressure gauge | A)The pressure gauge shall be calibrated regularly<br>R290 and R161 refrigerant can use the pressure gauge of R22, R32 refrigerant can cause the pressure gauge of R410A. |
| Fire extinguisher | Carry a fire extinguisher during installation and maintenance. There should be at least two kinds of dry powder, carbon dioxide and foam extinguishers in the maintenance site, and they should be placed in the prescribed position with eye-catching signs and accessible places. |

1. The installation site should be in well-ventilated condition.
2. The sites for installing and maintaining an air conditioner using Refrigerant R32 should be free from open fire or welding smoking, drying oven or any other heat source higher than 548°C which easily produces open fire.
3. When installing an air conditioner, it is necessary to take appropriate anti-static measures such as wear anti-static clothing and or gloves.
4. It is necessary to choose the site convenient for installation or maintenance wherein the air inlets and outlets of the indoor and outdoor units should be not surrounded by obstacles or close to any heat source or combustible and/or explosive environment.
5. If the indoor unit suffers refrigerant leak during the installation, all the personnel should go out till the refrigerant leaks completely for 15 minutes. If the product is damaged, it is a must to carry such damaged product back to the maintenance station and it is prohibited to weld the refrigerant pipe or conduct other operations on the user's site.
6. It is necessary to choose the place where the inlet and outlet air of the indoor unit is even.
7. It is necessary to avoid the places where there are other electrical products, power switch plugs and sockets, kitchen cabinet, bed, sofa and other valuables right under the lines on two sides of the indoor unit, and also prevent mechanical damage from occurring.

# DREO CUSTOMER CARE 08

## Default 12-Month Warranty

This appliance is covered by DREO warranty for 12 months from the date of its original purchase.

## Extend Your Warranty

Extend your warranty by registering your new appliance on our website
**https://dreo.com/warranty**

**The warranty will not apply in cases of:**

1. Accident, misuse, or repairs performed by unauthorized personnel.
2. Any unit that has been tampered with or used for commercial purposes.
3. Normal wear and tear of wearable parts.
4. Use of force, damage caused by external influences.
5. Damage caused by non-observance of the User Manual, e.g. connection to an unsuitable mains supply or noncompliance with the instructions.
6. Partially or completely dismantlede appliances.
7. Defects caused by or resulting from damages from shipping or from repairs, service, or alteration to the product or any of its parts that have been performed by a repair person not authorized by DREO.

We can only provide after-sales service for products that are sold by DREO or DREO authorized retailers and distributors. If you have purchased the appliance from a different place, please contact your seller for return and warranty issues.

### FCC Statement

This device complies with Part 15 of the FCC Rules.Operation is subject to the following two conditions: (1) this device may not cause harmful interference, and (2) this device must accept any interference received, including interference that may cause undesired operation.
Please note that changes or modifications of this product is not expressly approved by the party responsible for compliance could void the user's authority to operate the equipment.
**NOTE:** This equipment has been tested and found to comply with the limits for a Class B digital device, pursuant to Part 15 of the FCC Rules. These limits are designed to provide reasonable protection against harmful interference in a residential installation. This equipment generates, uses and can radiate radio frequency energy and, if not installed and used in accordance with the instructions, may cause harmful interference to radio communications. However, there is no guarantee that interference will not occur in a particular installation.
If this equipment does cause harmful interference to radio or television reception, which can be determined by turning the equipment off and on, the user is encouraged to try to correct the interference by one or more of the following measures:
-Reorient or relocate the receiving antenna.
-Increase the separation between the equipment and receiver.
-Connect the equipment into an outlet on a circuit different from that to which the receiver is connected.
-Consult the dealer or an experienced radio/TV technician for help."
This equipment complies with FCC radiation exposure limits set forth for an uncontrolled environment. This equipment should be installed and operated with a minimum distance of 20cm between the radiator & your body. This transmitter must not be co-located or operating in conjunction with any other antenna or transmitter.

Model No.: DR-HAC008S/DR-HAC009S
Rev_1.0_EN

**We're Here to Help!**

(888) 290-1688 Mon - Fri, 9:00 am-5:00 pm PST/PDT
support@dreo.com
www.dreo.com
Shenzhen Hesung Innovation Technology Co., LTD
26F, Bldg A7, Creative City, Shenzhen, China

MADE IN CHINA

www.dreo.com

## Looking for help?

Contact us to get expert support.

support@dreo.com (888) 290-1688 www.dreo.com

Mon - Fri, 9:00 am-5:00 pm PST/PDT