EDGE

ARIENS®

OPERATOR'S MANUAL
MANUEL DU UTILISATEUR

MODELS

915281 – EDGE 34
(SN 101 +)

915283 – EDGE 42
(SN 101 +)

915285 – EDGE 52
(SN 101 +)

915291 – EDGE LT 42
(SN 101 +)

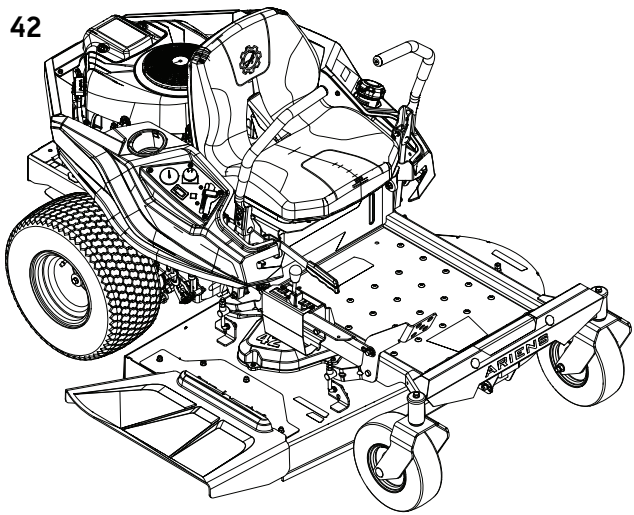

REGISTER YOUR PRODUCT!

E10 E15 E20 E85

EN ENGLISH

FR FRANÇAIS

09740100C • 12/25
PRINTED IN USA

TABLE OF CONTENTS

WELCOME 1
Register Your Product!. 1
SAFETY. 2
Practices & Laws 2
Emission Control System. 2
Required Operator Training 2
Safety Alert Symbol 2
Signal Words 2
Safety Decals. 3
Safety instructions 6
CONTROLS AND FEATURES 9
Ignition Key 10
Choke Control Knob. 10
Throttle/Choke Control Lever. 10
Throttle Control Lever 10
Power-Take-Off (PTO) Knob 11
Hour Meter. 11
Height-of-Cut Adjustment System 11
Deck Lift Pedal. 11
Seat Adjustment Lever. 11
Parking Brake Lever 11
Safety Interlock System 11
Steering Levers 11
Transaxle Bypass Levers. 11
BEFORE OPERATION 12
Before Operating Unit 12
Set Cutting Height 12
Adjust Seat. 13
Adjust Steering Levers. 13
OPERATION 14
Emergency Stopping 14
Start the Engine 14
Operate Unit. 14
Stop the Engine 15
Move Unit Manually 15
Transport Unit 16
MAINTENANCE 16
Maintenance Schedule 16
Service Parts 17
Clean Mower Deck 17
Service Position. 17
Check safety interlock system 18
Check Parking Brake. 18
Check Engine Oil. 18
Check Tire Pressure 18
Check Fasteners 18
Lubricate Unit. 18
Check Mower Blades. 18
Check Battery 20
Charge Battery. 20
Check Mower Belts 20
SERVICE & ADJUSTMENTS 21
Adjust Unit to Drive Straight. 21
Adjust Transaxles 21
Adjust Parking Brake 23
Replace Belts. 24
Remove & Install Mower Deck. 27
Level & Pitch Mower Deck. 28
TROUBLESHOOTING 30
STORAGE. 32
Short-Term Storage. 32
Long-Term Storage 32
Start-of-Season Preparation 32
ACCESSORIES. 32
SPECIFICATIONS. 33
CRITICAL TORQUES 34
WARRANTY 35

WELCOME

REGISTER YOUR PRODUCT!

It is extremely important to register your product at time of purchase. Product registration activates the warranty and establishes a communication link from AriensCo.

Locate the model and serial number decal on your unit and register those numbers online at www.ariens.com. See Figure 1 for decal location. Be aware that the original selling dealer may have already completed product registration on behalf of the original purchaser.

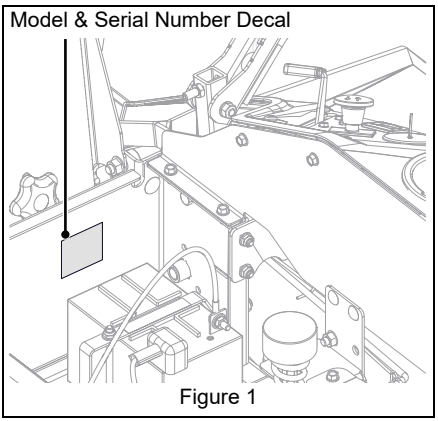

Figure 1

Record model number here.

Record serial number here.

MANUALS

Before operating or servicing the unit, carefully and completely read the manuals provided with the unit. They contain safety instructions and important information about unit controls.

The engine on this unit is covered by a separate manual. Refer to the engine manual for engine service recommendations. Contact the engine manufacturer for a replacement manual if necessary.

Your dealer must review important information in this manual with you before or upon delivery of the unit. It is your responsibility to read and understand all safety precautions and instructions in the manuals. If you do not understand or have difficulty following the instructions, contact your Ariens dealer for assistance. To locate your nearest Ariens dealer, go to www.ariens.com.

A parts manual for your unit is available for free download or purchase at www.ariens.com.

DISCLAIMER

Ariens reserves the right to discontinue, make changes to, and add improvements upon its products at any time without public notice or obligation. The descriptions and specifications contained in this manual were in effect at printing. Equipment described in this manual may be optional. Some illustrations may not be applicable to your unit.

SAFETY

Read these safety rules and follow them closely. Failure to follow these rules could lead to loss of control of unit, severe personal injury or death to you or bystanders, or result in damage to property or the machine.

PRACTICES & LAWS

Practice usual and customary safe working precautions. Learn applicable rules and laws in your area. Always follow the practices set forth in this manual.

EMISSION CONTROL SYSTEM

This equipment and/or its engine may include exhaust and evaporative emissions control system components required to meet U.S. Environmental Protection Agency (EPA) and/or California Air Resources Board (CARB) regulations. Tampering with emission controls and components by unauthorized personnel may result in severe fines or penalties. Emission controls and components can only be adjusted by an Ariens dealer or an authorized engine manufacturer's service center. Contact your Ariens Equipment Retailer concerning emission controls and component questions.

REQUIRED OPERATOR TRAINING



Read and understand the Operator's Manual and decals on the unit. This information is for your safety and the proper use of your equipment. Failure to follow these instructions and warnings may cause death or serious injury. If you have purchased this product from an Ariens dealer, the dealer can provide you with training.

Familiarize yourself and any other operators with all controls and the safe use of the features of this unit. If you loan, rent or sell this product to others, provide them with all manuals.

If you have any questions, please call our customer support line at 920-756-4688 or contact us at www.ariens.com. Do not use this equipment if, after reading the Operator's Manual and the on-board decals, you have any questions about the safe use of this product.

WARNING: AVOID INJURY. This cutting machine is capable of amputating hands and feet and throwing objects. Failure to observe the safety instructions in the manuals and on decals could result in serious injury or death.

SAFETY ALERT SYMBOL

This is the safety alert symbol. It means:

- **ATTENTION!**
- **YOUR SAFETY IS INVOLVED!**

When you see this symbol:

- **BECOME ALERT!**
- **OBEY THE MESSAGE!**

SIGNAL WORDS

The safety alert symbol above and signal words below are used on decals and in this manual. Read and understand all safety messages.

1. Danger

DANGER: Indicates an IMMINENTLY HAZARDOUS SITUATION! If not avoided, WILL RESULT in death or serious injury.

2. Warning

WARNING: Indicates a POTENTIALLY HAZARDOUS SITUATION! If not avoided, COULD RESULT in death or serious injury.

3. Caution

CAUTION: Indicates a POTENTIALLY HAZARDOUS SITUATION! If not avoided, MAY RESULT in minor or moderate injury. It may also be used to alert against unsafe practices.

4. Notice

NOTICE: Indicates information or procedures that are considered important but not hazard related. If not avoided property damage could result.

5. Important

IMPORTANT: Indicates general reference information worthy of special attention.

SAFETY DECALS

The safety decals on your machine are visual reminders of the important safety information in this manual. All messages on your unit must be fully understood and carefully followed. Safety decals on the machine are explained below.

Safety Decal Locations

ALWAYS replace missing or damaged safety decals. Replacement decal part numbers are found in the parts manual for your machine and may be ordered from your dealer.

See Figure 2 for safety decal locations.

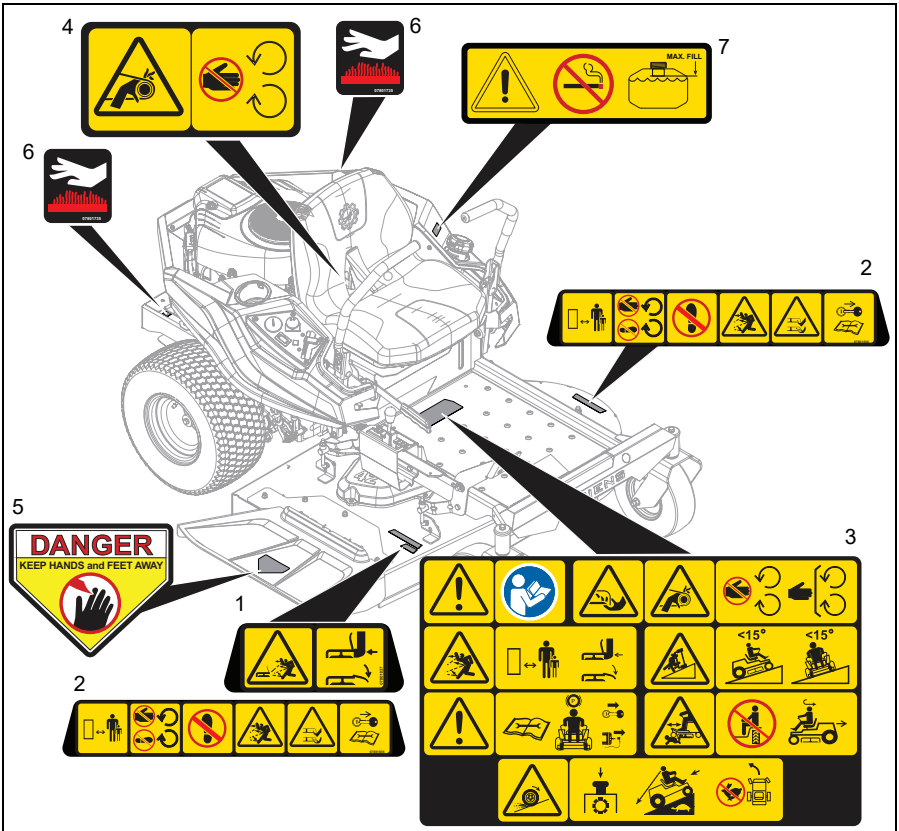

Figure 2

Safety Decal Descriptions

1. DANGER!



Discharge Hazard - NEVER operate unit without discharge chute in operating position. Thrown objects can cause injury or damage.



DO NOT operate mower unless all guards are in operating position or bagger is attached.

2. DANGER!



Discharge Hazard - NEVER direct discharge toward people, pets or property. Thrown objects can cause injury or damage.



Amputation Hazard - NEVER stick hands or feet under deck or shielded areas.



Shut off engine, remove key, and read manual before servicing or making adjustments to unit.



Keep children and others away from unit while unit is in operation.



Keep feet and hands away from all rotating or moving parts.



DO NOT step or stand in this area.

3. DANGER!



DANGER!



Read and understand the operator's manual before operating unit.

3.1 Amputation Hazard



To avoid amputation hazard DO NOT put hands near rotating blades.



To avoid amputation hazard DO NOT put hands near moving belts.



Keep hands away from all rotating or moving parts.



Keep all guards and shields in place.

3.2 Discharge Hazard



Discharge Hazard - NEVER direct discharge toward people, pets or property. Thrown objects can cause injury or damage.



DO NOT operate mower unless all guards are in operating position or bagger is attached.



Keep children and people away from unit during operation.

3.3 Tipping Hazard



Avoid tipping hazard.



DO NOT operate on slopes over 15°.



DO NOT operate on slopes over 15°.

3.4 Service Hazard



Before servicing unit do the following:



Read owners manual before servicing or making adjustments to unit.



Set parking brake.

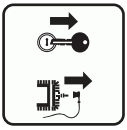

Remove key and disconnect spark plug before servicing or making adjustments to unit.

3.5 Bystander Hazard



DO NOT operate the unit in the presence of bystanders.



DO NOT carry passengers.



Look behind when operating the unit in reverse.

3.6 Loss of Traction Hazard



If loss of traction is experienced do the following:

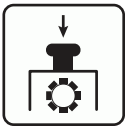

Disengage PTO.



Proceed off slope slowly.



DO NOT try to turn or speed up.

4. DANGER!



To avoid amputation hazard do not put hands near moving belts.



Keep hands away from all rotating or moving parts.

5. DANGER!



ALWAYS keep hands and feet away from discharge chute.

6. HOT PARTS!



DO NOT touch parts which are hot from operation. ALWAYS allow parts to cool.

7. WARNING!



Overfilling may cause severe damage to evaporative system!

NEVER fill fuel tank when engine is running, hot or unit is indoors. NEVER overfill fuel tank.

Replace fuel cap securely and clean up spilled fuel.



No smoking.

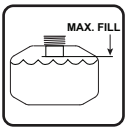

IMPORTANT: DO NOT overfill. Fill fuel tank to below bottom of filler neck.

SAFETY INSTRUCTIONS

The following safety instructions are based on the ANSI/OPEI 5395:2024 specifications of the American National Standards Institute and ISO 5395 in effect at the time of production.

Safe Practices for Ride-On Mowers

If used improperly, this machine is capable of amputating hands and feet and throwing objects. Failure to observe the following safety instructions could result in serious injury or death. Use only for purposes intended as set forth in the Operator's Manual. Other use is improper and may cause serious injury or death.

General Information
Read, understand, and follow instructions and warnings in this manual and on the machine, engine and attachments.
Only allow operators, who are responsible, trained, familiar with the instructions, and physically capable to operate the machine.
DO NOT carry passengers and keep people or pets away from the mowing area.
DO NOT operate the machine while physically or mentally impaired, feeling tired, ill or under the influence of alcohol or drugs.
Follow the manufacturer's recommendation for wheel weights or counterweights.
DO NOT touch parts which are hot. Allow parts to cool.

Preparation Before Operating
Inspect unit before each use for missing or damaged decals and shields, correctly operating safety interlock system, ROPS and deterioration of grass catchers. Replace or repair as needed.
Clear the operating area of all objects which could be thrown by or interfere with operation of the machine.
Keep the area of operation clear of all bystanders, particularly small children. Stop the machine and attachment(s) if anyone enters the area
DO NOT operate the machine without the entire grass catcher, discharge chute, or other safety devices in place and functioning properly. Check frequently for signs of damage, wear or deterioration and replace as needed.
NEVER tamper with safety devices. Check their proper operation regularly. NEVER do anything to interfere with the intended function of a safety device or to reduce the protection provided by the safety device.
Check parking brake operation frequently. Adjust and service as required.
Wear appropriate personal protective equipment such as safety glasses, hearing protection, and substantial footwear. DO NOT mow barefoot or while wearing sandals.

Operating
Improper use of power equipment can cause serious permanent injury or death to the operator or a bystander. Understand: • How to operate all controls • The functions of all controls • How to STOP in an emergency • Braking and steering characteristics • Turning radius and clearances If the operator or the mechanic cannot read the manual, it is the owner's responsibility to explain it to them. Manuals are available in other languages at www.ariens.com.

Only run the engine in well ventilated areas. Exhaust gases contain carbon monoxide, an odorless deadly poison.
Only operate the machine in daylight or good artificial light.
Avoid holes, ruts, bumps, rocks and other hazards. Uneven terrain could overturn the machine, or cause operator to lose their balance, footing and/or control of the mower.
DO NOT put hands or feet near rotating parts or under the machine. Keep clear of the discharge opening at all times.
Avoid slippery surfaces. ALWAYS be sure of your footing.
Stop engine before removing grass catcher or unclogging chute.
DO NOT direct discharge material toward anyone. Avoid discharging material against a wall or obstruction. Material may ricochet back toward the operator. Stop the blade(s) when crossing gravel surfaces. DO NOT mow into roads or across sidewalks.
DO NOT leave a running machine unattended. ALWAYS park on level ground, disengage the attachment, set parking brake, stop engine and remove key (if applicable) before leaving the operator's position.
DO NOT mow in reverse unless absolutely necessary. ALWAYS look down and behind before and while backing.
Lightning can cause severe injury or death. If lightning is seen or thunder is heard in the area, DO NOT operate the machine; seek shelter.
If you strike a foreign object, stop and inspect the machine. Repair, if necessary, before restarting.
ALWAYS check overhead and side clearances carefully before operation. Keep in mind that your mower deck may be wider than your track width.

Children Specific
Tragic accidents can occur if the operator is not alert to the presence of children. Children are often attracted to the machine and the mowing activity. NEVER assume that children will remain where you last saw them.
Keep children out of the operating area and under the watchful care of a responsible adult other than the operator.
Do not carry children, even with the blade(s) shut off. Children could fall off and be seriously injured or interfere with safe machine operation. Children who have been given rides in the past could suddenly appear in the mowing area for another ride and be run over or backed over.
DO NOT allow children under the age of 18 to operate any outdoor power equipment.

Slope Specific
Slopes are a major factor related to accidents. Operation on slopes requires extra caution. If you feel uneasy on a slope DO NOT mow it. Use the parking brake for emergency stops.
DO Not operate on slopes of more than 15°.
Do not mow within 1.2 M (4 feet) of a drop off. Do not mow within 1.2 M (4 feet) of a pond or other waterway. The primary hazard of slope operation is loss of control and/or roll over.
Mow up and down slopes, NEVER across. Exercise caution when changing direction on slopes. Use caution while operating near dropoffs.
Avoid mowing wet grass. Wet surfaces can cause a loss of traction and control.
DO NOT operate machine under any condition where traction, steering, or stability is in question. Tires could slide even if the wheels are stopped.
Always keep the machine in gear when going down slopes. Do not coast downhill.
Avoid starting and stopping on slopes. Avoid making sudden changes in speed or direction. Make turns slowly and gradually.
Use extra care while operating machine with a grass catcher or other attachment(s). They can affect the stability of the machine.

Fire and Fuel Specific
Extinguish all cigarettes, cigars, pipes and other sources of ignition.
Use only an approved fuel container.
DO NOT remove fuel cap or add fuel with the engine running or while hot.
DO NOT refuel indoors or in enclosed spaces.

DO NOT store the machine or fuel container, or refuel, where there is an open flame, spark, or pilot light such as on a water heater or other appliance.
If fuel is spilled, DO NOT attempt to start the engine and avoid creating any source of ignition until fuel vapors have dissipated.
To help prevent fires: keep machine free of grass, leaves, or other debris build up; clean up oil or fuel spillage and remove any fuel soaked debris; allow engine to cool before storing.
Use extra care in handling gasoline and other fuels. They are flammable and vapors are explosive.

Hauling
Use a single full-width ramp for loading and unloading a machine for transport. Secure with appropriate straps.

Towing
Follow the manufacturer’s recommendation for weight limits for towed equipment and towing on slopes.

Service
Keep machine in good working order. Replace worn or damaged parts.
Use caution when servicing blades. Wrap the blade(s) or wear gloves. Replace damaged blades. DO NOT repair or alter blade(s).
Disconnect spark plug wire(s) and the negative battery cable before making any repairs.
Use only attachments recommended by AriensCo that are appropriate to your use and can be used safely in your application.
The use of non-genuine replacement parts or accessories could adversely affect machine operation and safety.
DO NOT change engine governor setting or overspeed the engine.

CONTROLS AND FEATURES

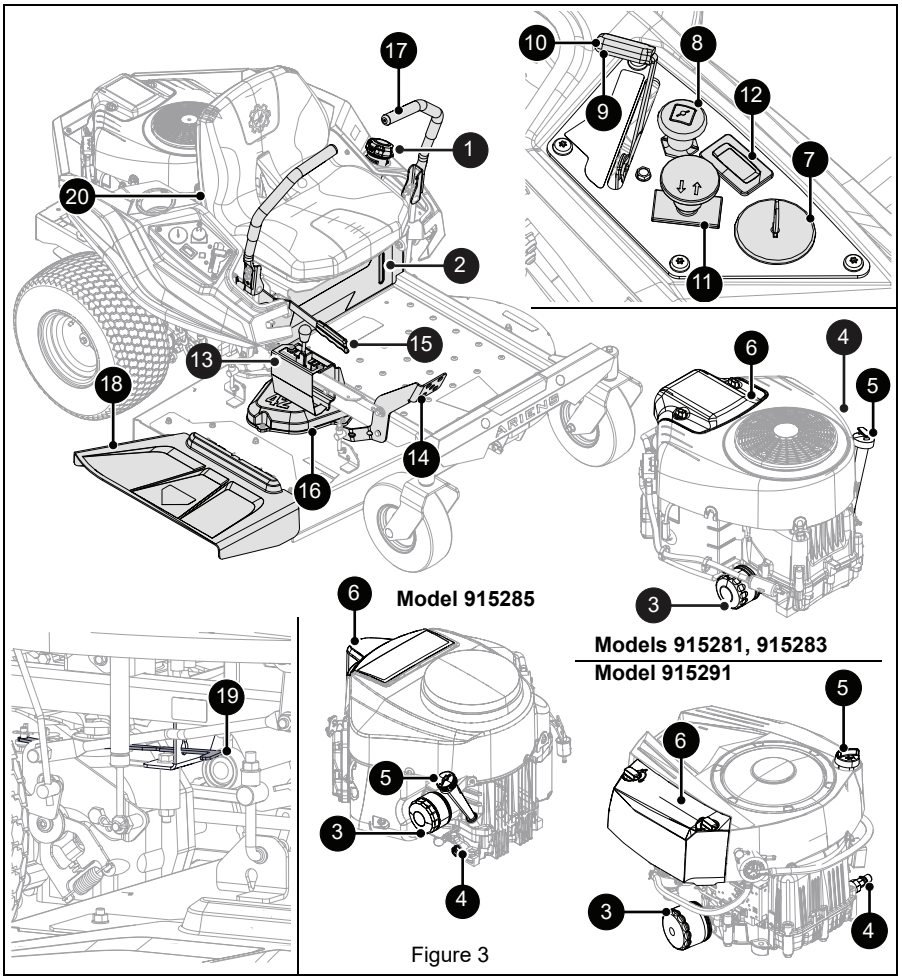

Figure 3

1. Fuel Tank and Cap
2. Fuel Level Window
3. Oil Filter
4. Oil Drain
5. Engine Oil Dipstick
6. Air Filter
7. Ignition Key
8. Choke Control Knob (Model 915285)
9. Throttle / Choke Control Lever (Models 915281, 915283, 915291)
10. Throttle Control Lever (Model 915285)
11. Power Take-off (PTO) Knob
12. Hour Meter (Models 915281, 915283, 915285)
13. Height-of-Cut Adjustment System
14. Deck Lift Pedal
15. Parking Brake Lever
16. Belt Cover (2)
17. Steering Lever (2)
18. Discharge Chute
19. Transaxle Bypass Lever (2)
20. Battery (Under Seat)

WARNING: AVOID INJURY. Read and understand the entire *Safety* section before proceeding.

See Figure 3 for all controls and features locations.

IGNITION KEY

See Figure 3.

Controls power to the engine. The key cannot be removed when in run position.

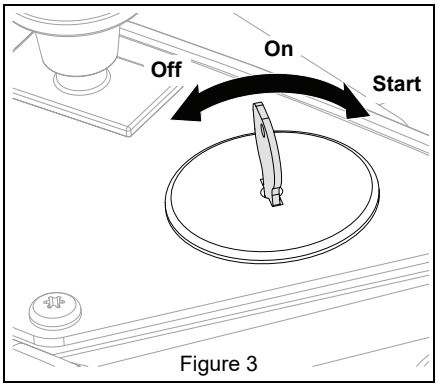

Figure 3

CHOKE CONTROL KNOB

Model 915285

See Figure 4.

Controls airflow to the engine.

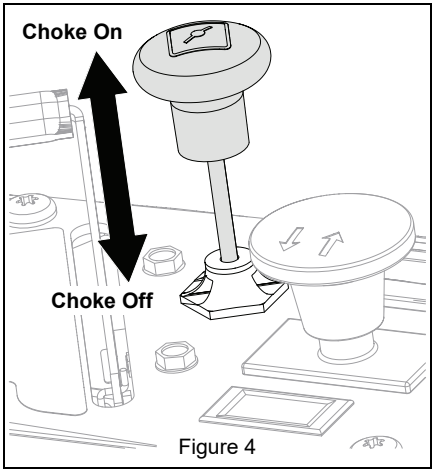

Figure 4

THROTTLE/CHOKE CONTROL LEVER

Models 915281, 915283, 915291

See Figure 5.

Throttle and choke are integrated into one lever. The choke controls airflow to the engine. The throttle controls engine speed. Move lever forward to increase engine speed, move lever back to decrease engine speed. Choke engages when lever is completely forward at ON position. Choke disengages when moved from ON position.

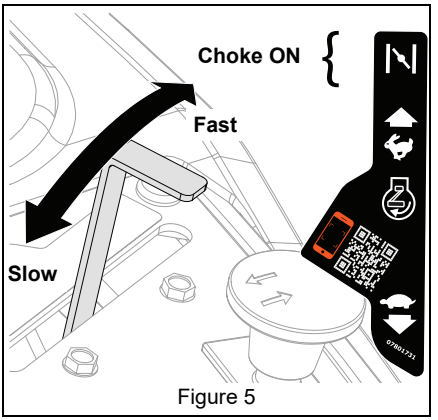

Figure 5

THROTTLE CONTROL LEVER

Model 915285

See Figure 6.

Controls engine speed.

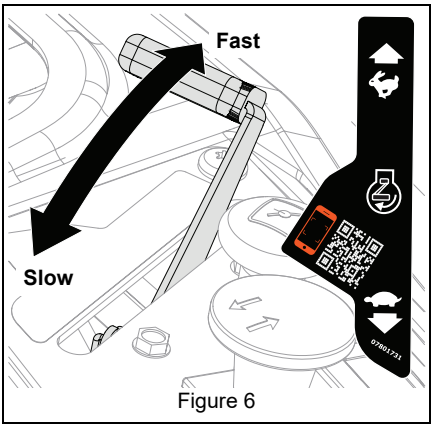

Figure 6

POWER-TAKE-OFF (PTO) KNOB

See Figure 7.

Controls power to mower blades. The engine will not start with the PTO knob in the on position.

WARNING: AVOID INJURY. Blades will not *immediately* stop after pushing PTO knob down to off position.

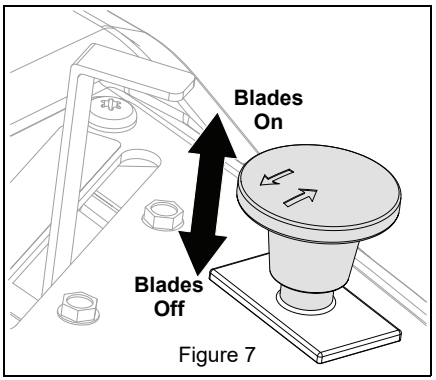

Figure 7

HOUR METER

Models 915281, 915283, 915285

Hour meter measure engine runtime and cannot be reset.

HEIGHT-OF-CUT ADJUSTMENT SYSTEM

See Figure 8.

Sets the height of cut.

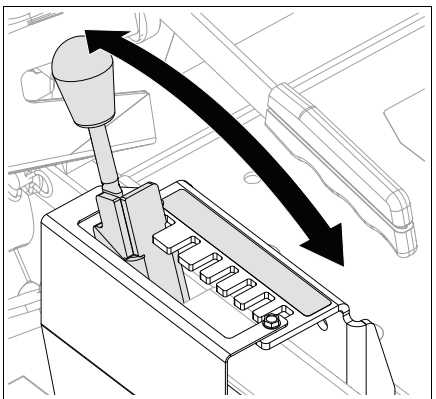
Figure 8

DECK LIFT PEDAL

Raises mower deck to change height-of-cut setting.

SEAT ADJUSTMENT LEVER

Unlocks seat to allow operator to move seat forward or backward and then lock in desired position.

PARKING BRAKE LEVER

See Figure 9.

Controls the parking brake. The engine will not start with brake in the off position.

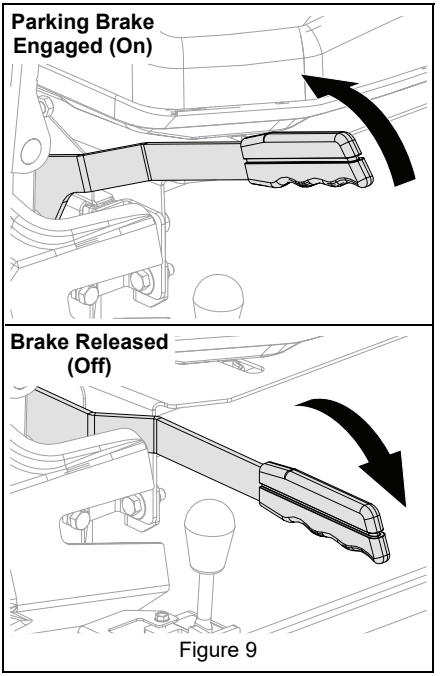

Figure 9

SAFETY INTERLOCK SYSTEM

Monitors the interaction of various unit features for operator safety.

STEERING LEVERS

Control the direction and speed of unit. To stop unit, return both steering levers to neutral.

TRANSAXLE BYPASS LEVERS

Control the transaxles so unit may be moved with the engine off.

BEFORE OPERATION

WARNING: AVOID INJURY. Read and understand the *Safety* section before proceeding.

BEFORE OPERATING UNIT

1. Clean mower deck. See *Clean Mower Deck* on page 17.
2. Check fuel level and add fuel if needed.

IMPORTANT: Use fresh unleaded fuel with an octane rating of at least 87. DO NOT use E85 blended fuels; the engine is not E20 / E30 / E85 compatible. The maximum recommended ethanol content is 10%. Ariens recommends using a quality fuel stabilizer in all fuel. See *Short-Term Storage* on page 32.

3. Check engine oil level and add oil if needed. Refer to engine manual.
4. Check condition of air cleaner. Refer to engine manual.
5. Check function of all controls.
6. Check function of the Safety Interlock System by performing the tests below. Contact your Ariens dealer for repair if any of the tests fail.

WARNING: AVOID INJURY. Failure of Safety Interlock System together with improper operation can result in severe personal injury.

Test	Steering Levers	PTO	Parking Brake	Result
Starting Interlock				
1	Neutral	Off	On	Engine starts.
2	Forward, Neutral, Reverse	On	On or Off	Engine does not start.
3	Forward, Neutral, Reverse	On or Off	Off	Engine does not start.
Operating Interlock (Engine On)				
4 *	Forward, Neutral, Reverse	On	On or Off	Engine shuts off.
5 *	Forward, Neutral, Reverse	On or Off	Off	Engine shuts off.
* When operator lifts off seat.				

SET CUTTING HEIGHT

See Figure 10.

1. Depress and hold deck lift pedal in forward position.
2. Position height of cut selector lever at the desired setting in the height of cut bracket.
3. Slowly return deck lift pedal to resting position.

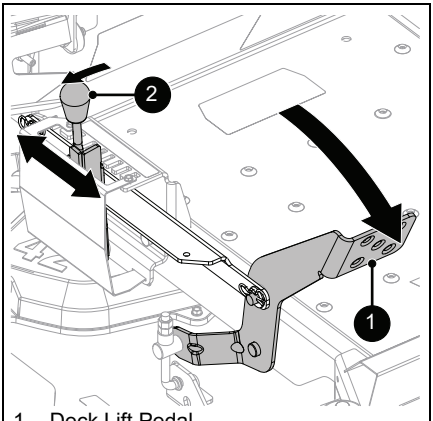

1. Deck Lift Pedal
2. Height-of-Cut Adjustment System

Figure 10

ADJUST SEAT

1. Tip the seat forward.
2. Loosen the two wing knobs located toward the front of the seat plate. See Figure 11.

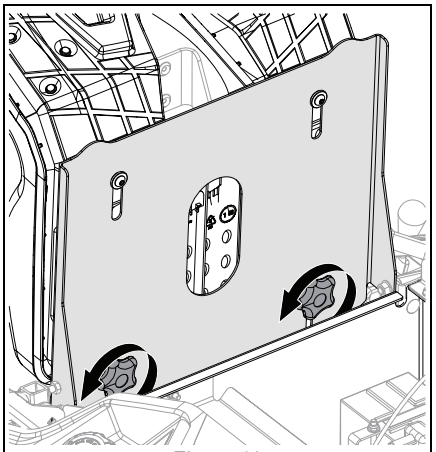

Figure 11

3. Move seat to desired position.
4. Tighten wing knobs.
5. Return seat to operating position.

ADJUST STEERING LEVERS

Adjust Steering Lever Height

See Figure 12.

1. Remove hardware securing steering lever to upper control arm.
2. Place steering lever in desired adjusting hole.
   - Use upper and middle holes for highest lever position.
   - Use middle and lower holes for lowest lever position.
3. Reinstall hardware in upper control arm.
4. Align levers side to side. See *Adjust Steering Level Reach* on page 14.
5. Fully tighten hardware.

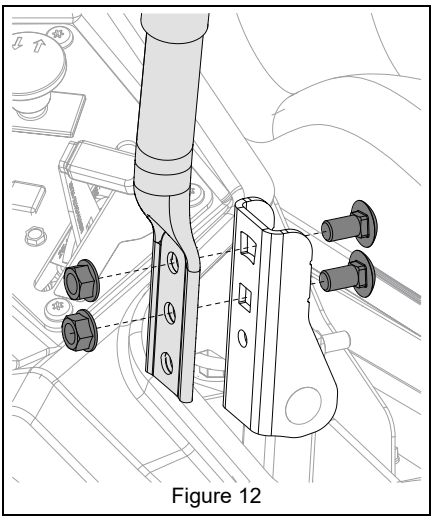

Figure 12

See Figure 13.

6. Loosen lock nut on height-adjustment bolt.
7. Turn bolt in or out until levers are at the same height.

IMPORTANT: Ensure steering levers don't interfere with each other.

8. Tighten lock nut.

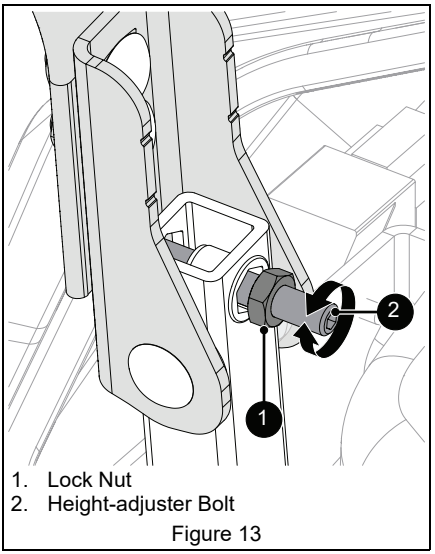

1. Lock Nut
2. Height-adjuster Bolt

Figure 13

Adjust Steering Level Reach

See Figure 14.

1. Loosen hardware securing steering lever to upper control arm.
2. Pivot steering lever to desired position.
3. Ensure levers are aligned with each other.
4. Tighten hardware.

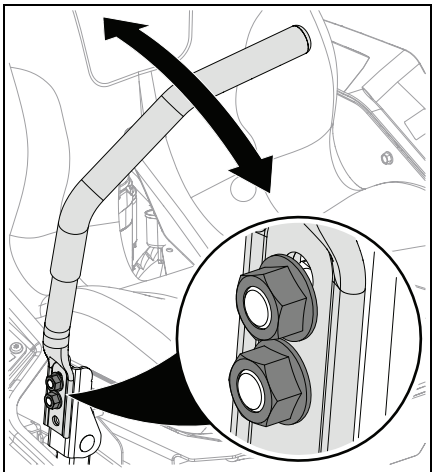

Figure 14

OPERATION

WARNING: AVOID INJURY. Read and understand the *Safety* section before proceeding.

IMPORTANT: All references to left, right, front or rear are given from the perspective of operator in operator's position, facing the direction of forward travel.

EMERGENCY STOPPING

1. Move steering levers to neutral position.
2. Engage parking brake.
3. Push PTO knob down to off position.
4. Turn ignition key to off position and remove key from ignition.

START THE ENGINE

1. Push PTO knob down to off position.
2. Move steering levers to neutral position.
3. Engage parking brake.
4. If the engine is cold, move the choke to the on position. If engine is warm or hot, turn choke off.
5. ***Models 915281, 915283, 915291:*** If choke is not used, set throttle to slow speed.

   Model 915285**:** Set throttle to slow speed.
6. Insert ignition key and turn to start position. Release key when engine starts.

IMPORTANT: Do not operate the starter for more than 10 seconds at a time. If the engine does not start, allow a 60-second cool down period between starting attempts.

7. If choke is on, wait a few seconds after engine starts and then turn choke off.

IMPORTANT: Make sure choke is completely off. Engine will not run smoothly using partial choke.

OPERATE UNIT

1. Release parking brake.
2. Set throttle control lever to fast position.

IMPORTANT: Engaging the PTO knob with the throttle lever set lower than fast position can cause excessive belt wear. ALWAYS use fast position when engaging the PTO.

3. Pull PTO knob up to on position.

IMPORTANT: Never engage the PTO if the mower is plugged with grass or other material. This may cause damage to the electric clutch.

WARNING: AVOID INJURY. Move the steering levers slowly and keep the throttle at slow speed until you learn how to operate the unit.

4. Move steering levers to begin mowing.

Direction of Travel	Lever Position	
Forward	Push both levers forward from neutral position.	
Reverse	Pull both levers backward from neutral position.	
Right Turn	Push left lever farther forward than the right lever.	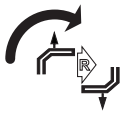
Left Turn	Push right lever farther forward than the left lever.	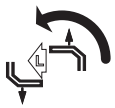
Stop	Return both levers to neutral position.	

IMPORTANT: Aggressive turning can scuff or damage lawns. Always keep both wheels rotating when making sharp turns. DO NOT make turns with inside wheel completely stopped. For minimum turning radius, slowly reverse inside wheel while moving outside wheel slowly forward.

For Best Mowing Results

- Cut grass when it is dry.
- Keep mower blades sharp.
- Keep mower deck properly leveled.
- Do not set height of cut too low. For very tall grass, mow twice.
- Do not travel too fast.
- Mow with the engine set at full throttle.
- When mulching, only remove 1/3 of grass length per cutting. Do not cut more than 2.5 cm (1") at any one time.
- Discharge clippings into areas already cut.
- Vary cutting pattern with each mowing.
- Do not allow grass or debris to collect inside of mower deck. Clean after each use.

STOP THE ENGINE

WARNING: AVOID INJURY. Wait for all moving parts to stop before leaving operator's position.

1. Move steering levers to neutral position and rotate outward.
2. Engage parking brake.
3. Push PTO knob down to off position.
4. Set throttle to slow speed.
5. Turn ignition key to off position and remove key from ignition.

MOVE UNIT MANUALLY

Bypass the transaxles to move the unit with the engine off.

IMPORTANT: There is one transaxle bypass lever on each side of unit. Ensure that both levers are fully in front or rear position.

1. Stop engine, engage parking brake, remove key, and wait for moving parts to stop and for hot parts to cool.
2. Pull both transaxle bypass levers out into bypass position. See Figure 15.

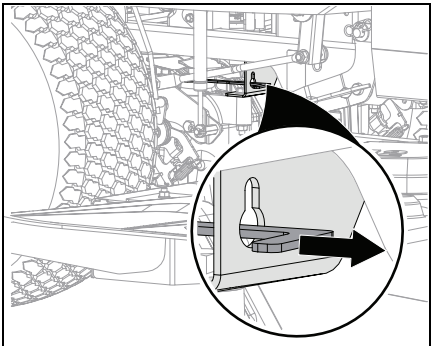

Figure 15

3. Release parking brake and push unit to desired location.
4. Engage parking brake.

5. Return transaxle bypass levers to operating position. See Figure 16.

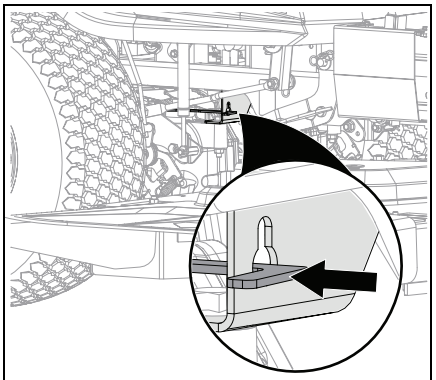

Figure 16

TRANSPORT UNIT

1. Raise mower deck to its highest position.
2. Move unit to transport vehicle.
3. Stop engine, engage parking brake and remove key from ignition.
4. Secure mower frame to transport vehicle.

NOTICE: NEVER secure unit to vehicle from rods or linkages that could be damaged.

MAINTENANCE

WARNING: AVOID INJURY. Read and understand the *Safety* section before proceeding.

Proper maintenance can prolong the life of unit. The *Maintenance Schedule* on page 16. shows the recommended service schedule.

Your Ariens dealer can provide service and adjustments to keep your unit operating at peak efficiency. Contact an authorized engine manufacturer's service center for engine service.

More frequent service may be required due to working conditions (heavy loads, high ambient temperatures, dusty conditions, or airborne debris).

See the maintenance instructions in the Engine Manual for additional information.

MAINTENANCE SCHEDULE

Service Performed	Each Use	Every 25 hrs.	Every 50 hrs.	Every 100 hrs.
Clean Engine of any Grass or Debris	•			
Check Safety Interlock System	•			
Check Parking Brake	•			
Check Engine Oil *	•			
Change Engine Oil *				
Check Tire Pressure	•			
Check Mower Blades	•			
Check Air Filter *	•			
Change Air Filter *				
Check Battery		•		
Clean Battery		•		
Check Fasteners			•	
Lubricate Unit			•	
Clean Engine Cooling System*				•
Check Belts				•

* Refer to engine manual for instructions

SERVICE PARTS

See your Ariens dealer to purchase service parts for your unit.

Description	Qty.	Part No.
Transaxle-Drive Belt	1	07200010
Mower Belt – 34"	1	07200116
Mower Belt – 42" (Model 915283)	1	07231800
Mower Belt – 42" (Model 915291)	1	07201003
Mower Belt – 52"	1	07241600
Mower Blade – 34"	2	03971900
Mower Blade – 42"	2	04965000
Mower Blade – 52"	3	04771200
Mulching Blade – 34"	2	03797300
Mulching Blade – 42"	2	05027400
Mulching Blade – 52"	3	04794400
Spindle Assembly – 34"	2	51519500
Spindle Assembly – 42"	2	51537300
Spindle Assembly – 52"	3	51537200
Front Wheel	2	07101519
Fuel Filter (Models 915281, 915283, 915291)	1	00682500
Fuel Filter (Model 915285)	1	21573800
Engine Oil Filter (Models 915281, 915283, 915291)	1	21556900
Engine Oil Filter (Model 915285)	1	21548100
Air Filter (Models 915281, 915283)	1	21561900
Air Filter (Model 915285)	1	21548000
Air Filter (Model 915291)	1	21557100
Pre-Cleaning Air Filter (Model 915291)	1	21557200
Spark Plug (Models 915281, 915283, 915291)	2	21575022
Spark Plug (Model 915285)	2	21536100
Muffler Gasket (Models 915281, 915283)	2	05600519
Muffler Gasket (Model 915285)	2	00191627
Muffler Gasket (Model 915291)	2	03652700

CLEAN MOWER DECK

Clean grass and debris from mower deck before each use.

1. Stop engine, engage parking brake, remove key, and wait for moving parts to stop and for hot parts to cool.
2. Remove grass and debris from mower deck and around discharge opening.
3. Remove mower blades and remove grass and debris accumulation from inside the cutting chamber. See *Remove Blades* on page 18.

IMPORTANT: Grass accumulation and debris buildup inside the cutting chamber disrupts aerodynamics and can harbor bacteria and fungi. Clean regularly for best cut quality and to help prevent lawn disease spread.

SERVICE POSITION

Before starting any of the following maintenance procedures:

1. Park unit on a flat, level surface.
2. Stop engine, remove key and wait for all moving parts to stop and for hot parts to cool.
3. Engage parking brake.
4. Chock wheels. Strap and clamp unit onto lift, if used.
5. Disconnect spark plug wires.
6. Place steering levers in neutral position and rotate outward.
7. Rotate seat forward. See Figure 17.

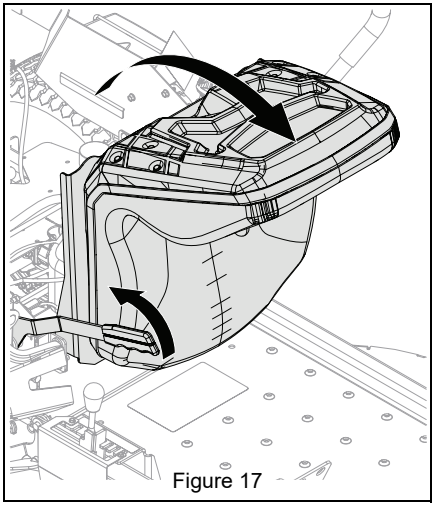

Figure 17

IMPORTANT: Reconnect spark plug wires after maintenance.

CHECK SAFETY INTERLOCK SYSTEM

With the parking brake engaged, the steering levers must be locked in neutral. With the parking brake disengaged, the engine must not start and the engine must shut off if the operator releases the control lever. See *Before Operation* on page 12.

If system does not operate correctly, see your dealer for repair. DO NOT operate until repairs are made.

CHECK PARKING BRAKE

1. Park unit on a flat, level surface.
2. Place steering levers in neutral position.
3. Engage parking brake.
4. Stop engine and wait for moving parts to stop and for hot parts to cool.
5. Bypass transaxles. See *Move Unit Manually* on page 15.
6. Push unit forward.
   - If unit does not move forward, no further action is needed.
   - If unit easily moves forward, adjust the brake lever. See *Adjust Parking Brake* on page 23.

CHECK ENGINE OIL

NOTICE: Engine oil level must be maintained at correct level or engine damage may occur. Refer to engine manual.

CHECK TIRE PRESSURE

See *Specifications* on page 33 for recommended tire pressure.

WARNING: AVOID INJURY. Explosive separation of tire and rim parts is possible.

- DO NOT inflate tires above the recommended pressure.
- DO NOT inflate tires with a compressor; use a hand pump.
- DO NOT stand in front of tire assembly when inflating. Use a clip-on chuck and extension hose long enough to allow you to stand to one side.

CHECK FASTENERS

Check for loose or missing hardware.

LUBRICATE UNIT

1. Apply oil to all pivot points and pin connections.

Lubricate Seat

See Figure 18.

1. Place unit in service position.
2. Apply grease to seat tracks through slots under seat plate.

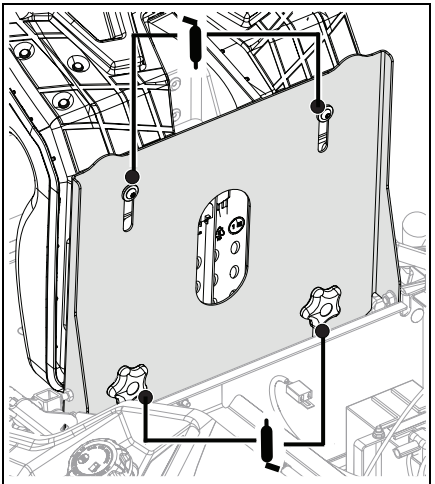

Figure 18

3. Return seat to operating position and slide seat back and forth to spread grease along tracks.

CHECK MOWER BLADES

Check blades for wear and damage. Replace or sharpen as needed.

CAUTION: AVOID INJURY. Use sturdy gloves or padding to protect hands when working with mower blades.

Rotation of one blade rotates the other blades.

Remove Blades

1. Stop engine, engage parking brake, remove key, and wait for moving parts to stop and for hot parts to cool.
2. Disconnect spark plug wires.

See Figure 19.

3. Remove and retain hardware securing mower blades and remove blades.

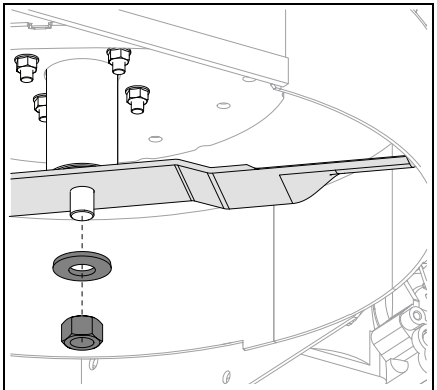

Figure 19

Sharpen Blades

CAUTION: DO NOT sharpen blades while attached to unit.

1. Remove blades. Discard blades if:
   - More than 1.3 cm (1/2") of metal is removed.
   - Air lifts are eroded.
   - Blades are bent or broken.
2. File or grind an equal amount of metal from each cutting edge of the blade until sharp. DO NOT change angle of cutting edge or round the corner of the blade. See Figure 20.

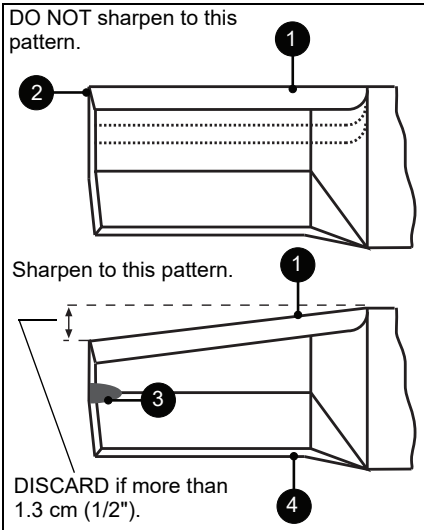

1. Cutting Edge
2. Square Corner
3. Air Lift Erosion
4. Air Lift

Figure 20

CAUTION: Unbalanced blades cause excessive vibration and eventual damage to unit. Balance blades before reinstalling on unit.

NEVER weld or straighten blades.

3. Check blade balance by sliding an unthreaded bolt through center hole. Hold the bolt level. If blade does not remain horizontal, sharpen the heavy end until blade is balanced.

Install Blades

See Figure 19.

1. Secure blades to spindles with original hardware. **Torque to 40.7 N•m +210° ±5° (30 lb-ft +210° ±5°),** but DO NOT exceed 122 N•m (90 lb-ft).

IMPORTANT: Reinstall Belleville washer with concave (cupped) side against blade.

2. Reconnect spark plug wires.

CHECK BATTERY

WARNING: AVOID INJURY. Battery posts, terminals and related accessories contain lead and lead compounds, chemicals known to the State of California to cause cancer and reproductive harm. Wash hands after handling.

Remove Battery

1. Stop engine, engage parking brake, remove key, and wait for moving parts to stop and for hot parts to cool.

CAUTION: AVOID DAMAGE. DO NOT allow tools to contact metal surfaces when removing positive battery cable.

See Figure 21.

2. Disconnect the negative cable and then the positive cable from battery.
3. Remove hardware securing hold-down bracket to battery and remove bracket.
4. Remove battery.

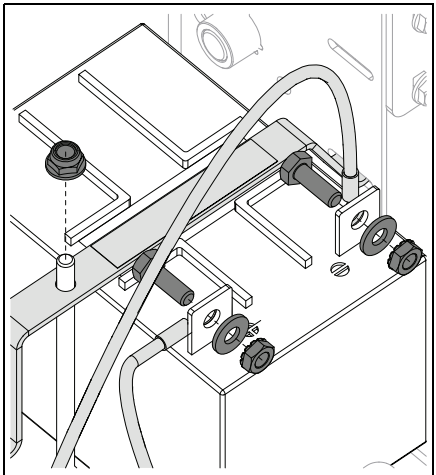

Figure 21

Clean Battery

1. Clean terminals and battery cable ends with a wire brush.
2. Coat terminals with dielectric grease or petroleum jelly.

Install Battery

See Figure 21.

1. Install battery.
2. Secure hold-down bracket to battery using original hardware.
3. Reconnect positive cable and then the negative cable.
4. Place boot over positive terminal.

CHARGE BATTERY

NOTICE: DO NOT fast charge. Charging at a higher rate damages or destroys battery. ONLY use an automatic charger designed for use with your battery.

NOTICE: ALWAYS follow information provided on battery by battery manufacturer. Contact battery manufacturer for details regarding charging.

1. Remove battery from unit. See *Remove Battery* on page 20.
2. Place battery on bench or other well-ventilated place.
3. Connect positive lead of charger to positive terminal.
4. Connect negative lead of charger to negative terminal.
5. Charge battery according to charger and battery manufacturers' instructions.
6. Reinstall battery. See *Install Battery* on page 20.

Jump-Starting

Ariens does not recommend jump-starting your unit. Jump-starting can damage engine and electrical system components. See your engine manual for more detailed information.

CHECK MOWER BELTS

Check belts for wear and replace as needed.

CAUTION: Keep body parts away from idler when releasing idler spring tension.

SERVICE & ADJUSTMENTS

WARNING: AVOID INJURY. Read and understand the *Safety* section before proceeding.

ADJUST UNIT TO DRIVE STRAIGHT

Check Tracking

1. Stop engine, engage parking brake, remove key, and wait for moving parts to stop and for hot parts to cool.
2. Check that tire pressures are equal and adjust, if necessary. See *Check Tire Pressure* on page 18.

IMPORTANT: DO NOT adjust tires to pressures beyond maximum value listed on tire sidewalls.

3. Start the engine and operate the unit to check tracking:
   - If unit drives straight when both steering levers are pushed completely forward, no further adjustment is needed.
   - If unit tracks to the left or right when both steering levers are pushed completely forward, continue to adjust steering lever limiter bolts. See *Adjust Tracking* on page 21.

Adjust Tracking

1. Stop engine, engage parking brake, remove key, and wait for moving parts to stop and for hot parts to cool.

See Figure 22.

2. Loosen the jam nuts on the speed limiter bolts in front of each steering lever.
3. Adjust limiter bolts:
   - Turn bolt clockwise to decrease the steering lever's maximum forward travel range and drive wheel speed on that side.
   - Turn bolt counterclockwise to increase the steering lever's maximum forward travel range and drive wheel speed on that side.

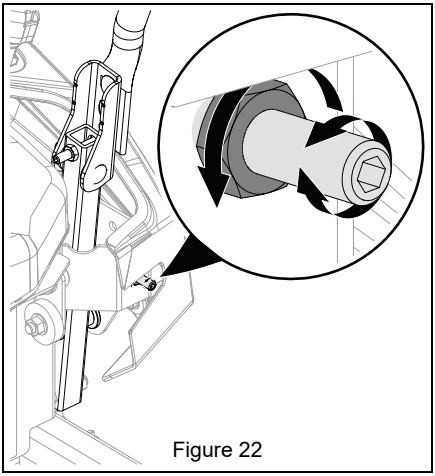

Figure 22

4. Check tracking and continue adjustment as necessary.
5. Tighten jam nuts on each speed limiter bolt after adjustment is complete.
6. Adjust steering levers to compensate for limiter bolt adjustment. See *Adjust Steering Levers* on page 13.

ADJUST TRANSAXLES

Check for Excessive Creep

WARNING: AVOID INJURY. This adjustment requires operating the engine. Use extreme care to avoid contact with moving parts and hot surfaces. Be sure rear of unit is well supported and secure before starting engine.

IMPORTANT: Check for excessive creep on both sides of unit.

1. Operate unit for a minimum of 5 minutes to warm hydraulic system.
2. Stop engine, engage parking brake, remove key, and wait for moving parts to stop and for hot parts to cool.
3. Chock front wheels and support unit so both drive wheels are off the ground.
4. Remove drive wheels.

IMPORTANT: Engine will stop if there's no operator in the seat when the parking brake is released in the next step. Enlist help from a qualified adult to complete steps 5 – 7.

5. ***Operator in seat:*** Start engine, move throttle lever to the fast position, and release parking brake.
6. ***Operator in seat:*** Move steering levers forward and backward 5 or 6 times and then return levers to the neutral position.
7. ***Technician:*** Check axles for rotation:
   - If there's no rotation, stop engine and continue to step 8.
   - If axles rotate, adjust hydraulic neutral first, then adjust mechanical neutral. See *Adjust Hydraulic Neutral* on page 22 and *Adjust Mechanical Neutral* on page 23.
8. Reinstall wheels.

IMPORTANT: Torque axle bolts to 40.6 – 49.8 N•m (30 – 36.7 lb-ft).

9. Remove supports from under unit.

Adjust Hydraulic Neutral

WARNING: AVOID INJURY. This adjustment requires operating the engine. Use extreme care to avoid contact with moving parts and hot surfaces. Be sure rear of unit is well supported and secure before starting engine.

IMPORTANT: Complete adjustment on both sides of unit.

1. Stop engine, engage parking brake, remove key, and wait for moving parts to stop and for hot parts to cool.
2. Chock front wheels and support unit so both drive wheels are off the ground.
3. Remove drive wheels.
4. Release parking brake.
5. Loosen the neutral set screw on the transaxle. See Figure 23.

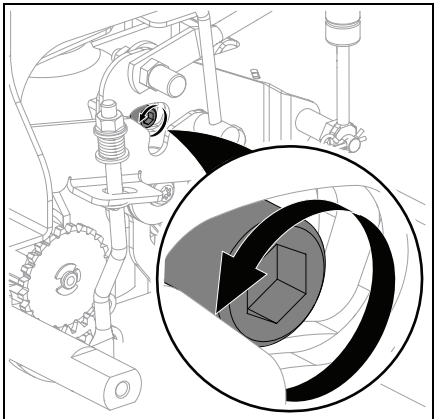

Figure 23

IMPORTANT: Engine will stop if there's no operator in the seat when the parking brake is released in the next step. Enlist help from a qualified adult to complete steps 6 – 10.

6. ***Operator in seat:*** Start the engine, move the throttle control lever to the fast position, and release the parking brake.
7. ***Technician:*** Slowly turn transaxle control arm in the opposite direction of axle rotation until axle stops. See Figure 24.

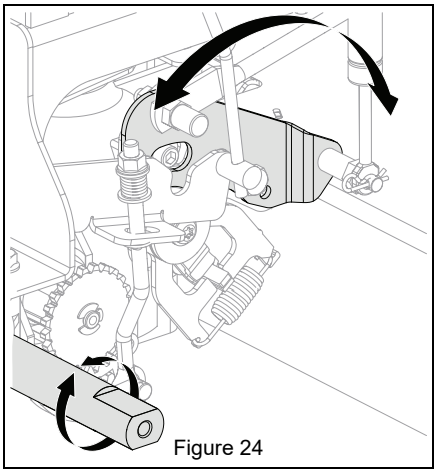

Figure 24

8. ***Technician:*** Hold the transaxle control arm in position and tighten the neutral set screw.
9. ***Operator in seat:*** Move steering levers forward and backward 5 or 6 times and then return levers to the neutral position.

10. ***Technician:*** Check axles for rotation:
    - If there's no rotation, stop engine and continue to step 11.
    - If axles rotate, repeat steps 5 – 10.
11. Reinstall wheels.

IMPORTANT: Torque axle bolts to 40.6 – 49.8 N•m (30 – 36.7 lb-ft).

12. Remove supports from under unit.
13. Adjust mechanical neutral. See *Adjust Mechanical Neutral* on page 23.

Adjust Mechanical Neutral

IMPORTANT: Complete adjustment on both sides of unit.

1. Adjust hydraulic neutral if procedure not already completed. See *Adjust Hydraulic Neutral* on page 22.
2. Stop engine, engage parking brake, remove key, and wait for moving parts to stop and for hot parts to cool.
3. Chock front wheels and support unit so both drive wheels are off the ground.
4. Remove drive wheels.
5. Release parking brake.
6. Remove pin retaining brake linkage to transaxle and disconnect linkage. See Figure 25.

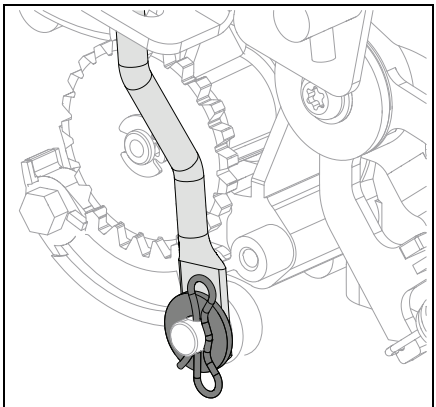

Figure 25

See Figure 26.

7. Loosen brake arm adjustment nut.
8. Engage parking brake and allow brake arm to seat itself in linkage stud.

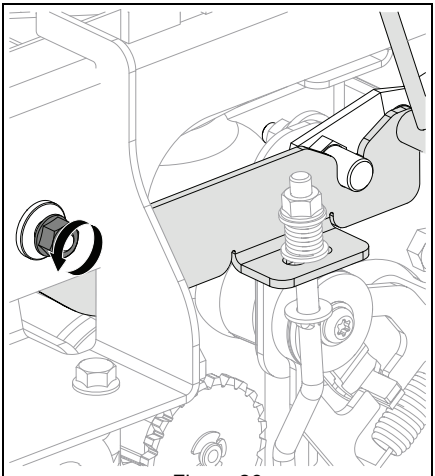

Figure 26

9. Tighten brake arm adjustment nut.
10. Reinstall brake linkage to transaxle and secure with original washer and bowtie pin.
11. Reinstall wheels.

IMPORTANT: Torque axle bolts to 40.6 – 49.8 N•m (30 – 36.7 lb-ft).

12. Remove supports from under unit.

ADJUST PARKING BRAKE

IMPORTANT: Complete adjustment on both sides of unit.

1. Stop engine, engage parking brake, remove key, and wait for moving parts to stop and for hot parts to cool.
2. Chock front wheels and support unit so both drive wheels are off the ground.
3. Remove drive wheels.

See Figure 27.

4. Measure and record spring lengths:
    a. Release parking brake.
    b. Measure and record lengths of compression springs on brake linkages.
    c. Engage parking brake.
    d. Measure and record lengths of compression springs on brake linkages.

IMPORTANT: Spring lengths should compress 3 – 4 mm (1/8 – 5/32") **when brake is engaged.**

5. Adjust as necessary:
   - Tighten nuts on brake linkages to increase compression.
   - Loosen nuts on brake linkages to decrease compression.

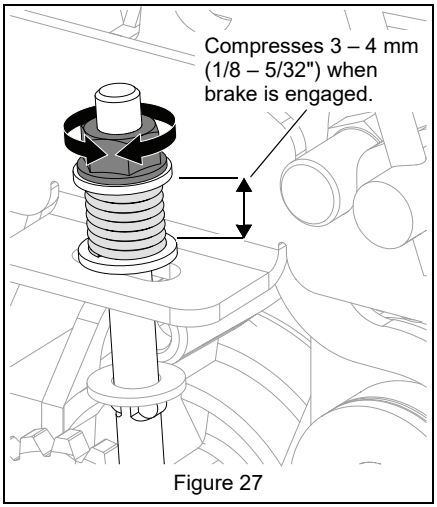

Figure 27

6. Reinstall wheels.

IMPORTANT: Torque axle bolts to 40.6 – 49.8 N•m (30 – 36.7 lb-ft).

7. Remove supports from under unit.
8. Check parking brake to confirm adjustment. See *Check Parking Brake* on page 18.

REPLACE BELTS

CAUTION: Damaged or worn belts may result in injury and / or damage to the unit. Check belts for excessive wear or cracks often.

Remove PTO Belt

1. Stop engine, engage parking brake, remove key, and wait for moving parts to stop and for hot parts to cool.
2. Place deck in its lowest cutting height setting.
3. Remove hardware retaining belt covers and remove belt covers.

CAUTION: Use care when releasing idler spring tension. Keep body parts well away from idlers when performing this operation.

4. Slowly remove PTO idler spring hook from anchor to release belt tension. See Figure 28 & Figure 29.

42" model shown. 34 & 52" models similar.

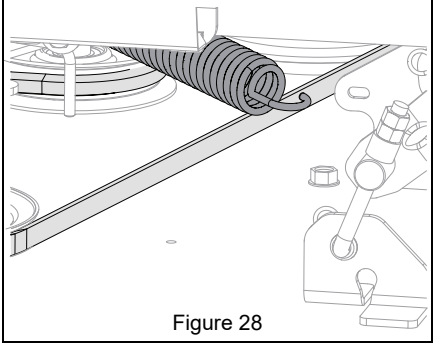
Figure 28

42" LT Model 915291

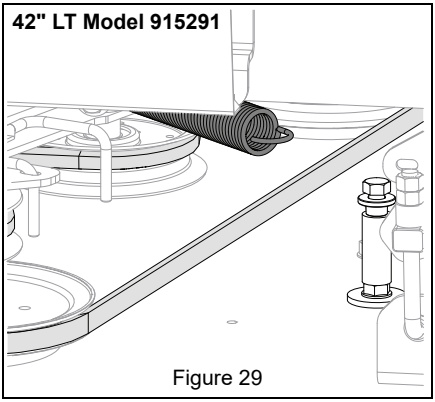
Figure 29

5. Remove hardware retaining belt finger and remove belt finger from belt idler. See Figure 30.

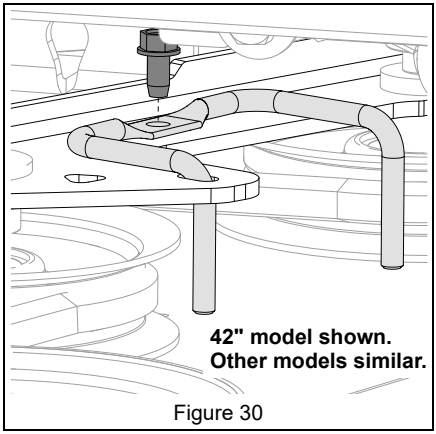

Figure 30

6. Remove belt from around clutch and deck pulleys and feed under idler arm to remove.

Install PTO Belt

See Figure 31.

1. Feed PTO belt under idler arm and install around clutch and deck pulleys.

IMPORTANT: PTO belt is a V-belt. Install belt with narrow edge around clutch and spindle pulleys and with wide edge against idler pulleys.

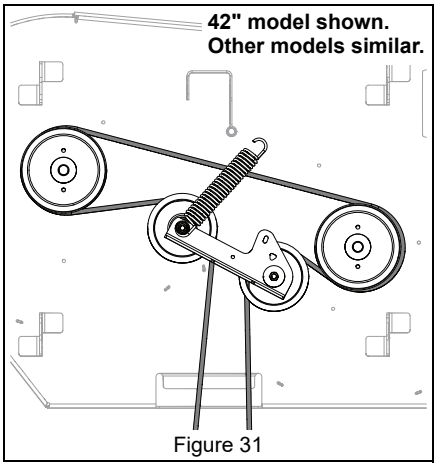

Figure 31

2. Reinstall belt finger with original hardware. See Figure 30.

3. Reinstall PTO idler spring hook around anchor location to apply belt tension. See Figure 32 & Figure 33.

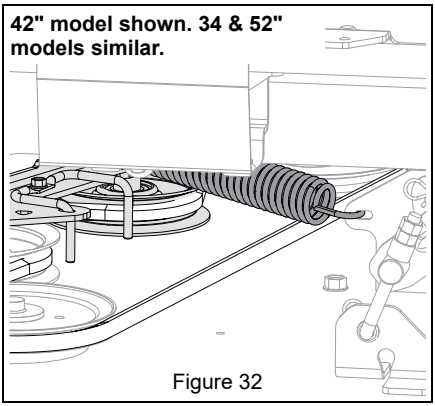

Figure 32

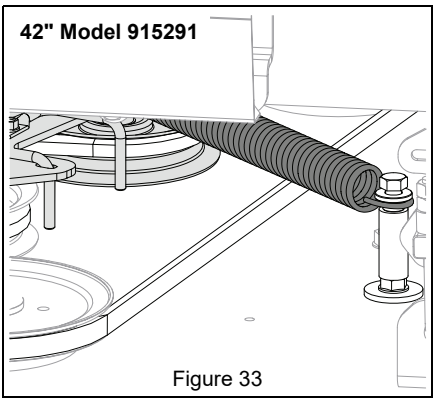

Figure 33

IMPORTANT: Ensure belt is without twists, has tension, and is correctly routed and aligned in all pulleys.

4. Reinstall belt covers with their original hardware. See Figure 34.

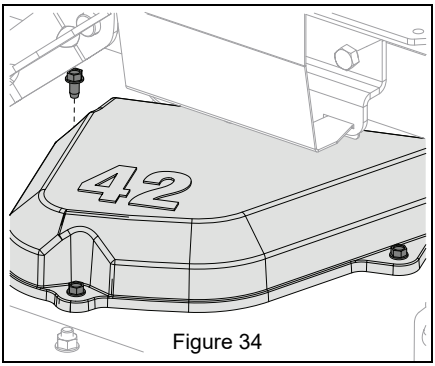

Figure 34

Remove Transaxle-Drive Belt

1. Remove PTO belt from clutch. See *Remove PTO Belt* on page 24.
2. Remove transaxle drive idler spring hook from anchor bolt to release belt tension. See Figure 35.

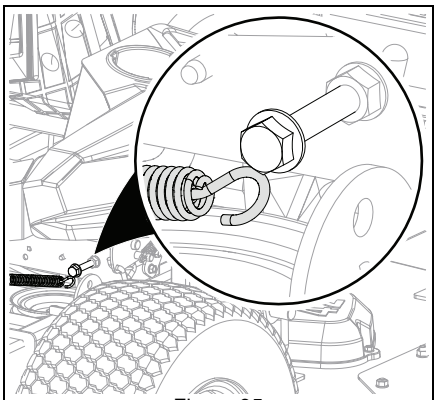

Figure 35

3. Remove hardware retaining muffler guard and remove guard. See Figure 36.

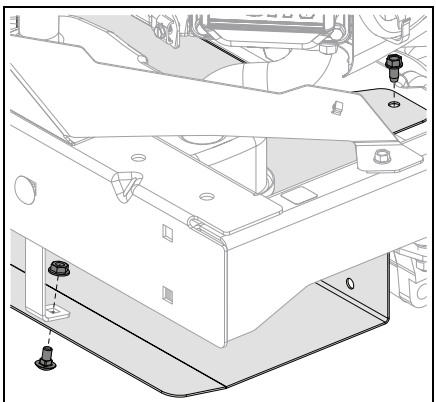

Figure 36

4. Remove hardware retaining clutch stop bracket and remove bracket. See Figure 37 & Figure 38.

Models 915281, 915283, 915285

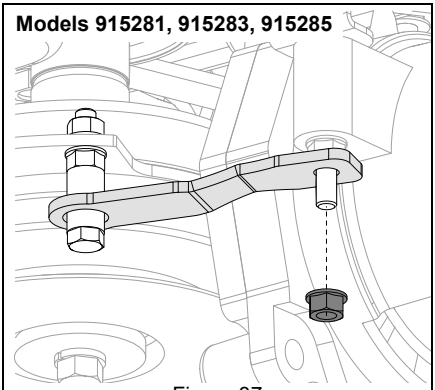

Figure 37

Model 915291

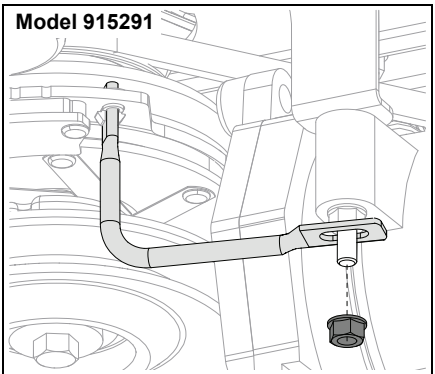

Figure 38

5. Disconnect wire harness from clutch.
6. Remove transaxle-drive belt.

Install Transaxle-Drive Belt

See Figure 39.

1. Reinstall transaxle-drive belt around engine and transaxle pulleys.

IMPORTANT: Belt is a V-belt. Install belt with narrow edge around engine and transaxle pulleys and with wide edge against idler pulley.

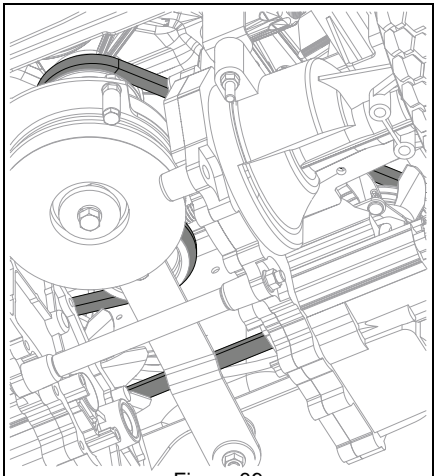

Figure 39

2. Reinstall transaxle drive idler spring hook around anchor bolt. See Figure 40.

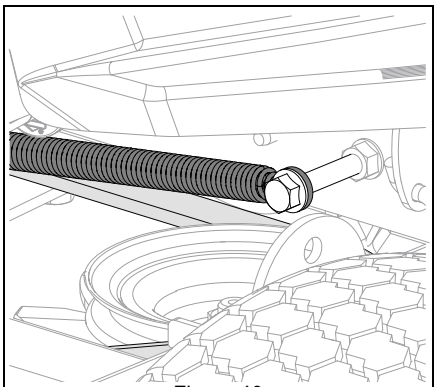

Figure 40

IMPORTANT: Ensure belt is without twists, has tension, and is aligned in all pulleys.

3. Reconnect wire harness to clutch.
4. Reinstall clutch stop and secure with original hardware. See Figure 37 & Figure 38.
5. Reinstall muffler guard and secure with original hardware. See Figure 36.
6. Reinstall PTO belt around clutch and reapply tension to PTO belt. See *Install PTO Belt* on page 25.

REMOVE & INSTALL MOWER DECK

Remove Deck

1. Stop engine, engage parking brake, remove key, and wait for moving parts to stop and for hot parts to cool.
2. Remove PTO belt from clutch. See *Remove PTO Belt* on page 24.
3. Raise deck to its highest position.
4. Position supports such as blocks or jack stands under each side of the deck.

NOTICE: DO NOT position supports under the reinforced leading edge at the front of the deck.

5. Lower deck to its lowest position so it rests on supports.
6. Remove bowtie pins and strap retaining drag link and remove drag link. See Figure 41.

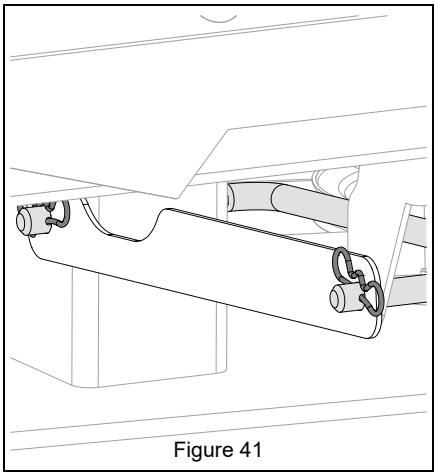

Figure 41

7. Remove bowtie pins and washers retaining deck-lift links to deck-lift brackets. See Figure 42.

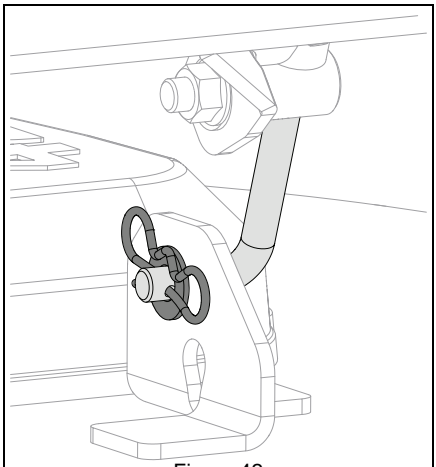

Figure 42

8. Disengage deck-lift links from deck-lift brackets and remove deck from under unit.

Install Deck

1. Position deck under unit.
2. Insert deck-lift links through deck-lift brackets and secure with original bowtie pins. See Figure 42.
3. Reinstall drag link through frame and mower deck. Secure with original strap and bowtie pins. See Figure 41.
4. Raise mower deck to its highest position and remove supports from under deck.
5. Lower mower deck to its lowest position.
6. Reinstall PTO belt around clutch and reapply belt tension. See *Install PTO Belt* on page 25.
7. Level and pitch mower deck. See *Level & Pitch Mower Deck* on page 28.

LEVEL & PITCH MOWER DECK

IMPORTANT: Unit must be parked on a flat, level surface.

Check Level & Pitch

1. Stop engine, engage parking brake, remove key, and wait for moving parts to stop and for hot parts to cool.
2. Disconnect spark plug wires.
3. Check that tire pressures are equal and adjust, if necessary. See *Check Tire Pressure* on page 18.

IMPORTANT: DO NOT adjust tires to pressures beyond maximum value listed on tire sidewalls.

4. Raise mower deck to its highest position.

CAUTION: AVOID INJURY. Use sturdy gloves or padding to protect hands when working with mower blades. Rotation of one blade rotates the other blades.

See Figure 43.

5. Manually turn mower blades so outer blades are positioned left to right across the width of the deck.
6. Measure the distances between:
   - The surface on which you're working and the outer tip of the left blade.
   - The surface on which you're working and the outer tip of the right blade.

IMPORTANT: Distances should be within 4.7 mm (3/16").

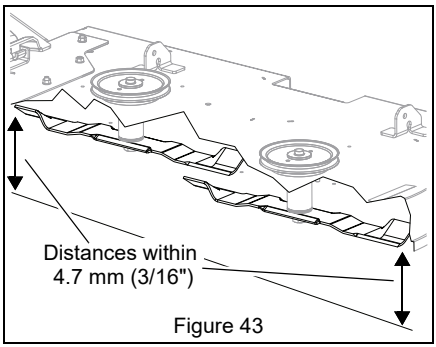

Figure 43

7. Manually turn mower blades so ends point front to back.

See Figure 44.

8. Measure the distances between:
   - The surface on which you're working and the front tip of the center blade (decks with 3 blades), or the front tips of both blades (decks with 2 blades).
   - The surface on which you're working and the rear tips of the outer blades (decks with 3 blades), or the rear tips of the both blades (decks with 2 blades).

IMPORTANT: The distance between the front blade tips and the surface on which you're working should reflect your cutting height setting, and the distance between the rear blade tips and the surface on which you're working should be **3.2 – 6.4 mm (1/8 – 1/4") higher than the front blade tips.**

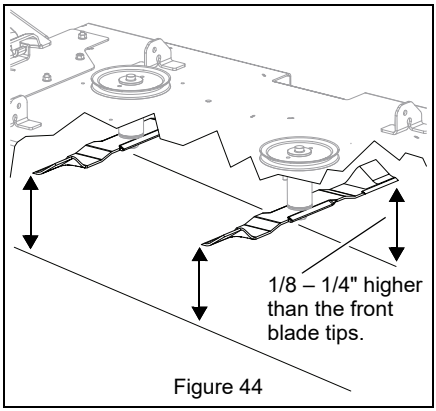

Figure 44

If measurements are out of range, adjust deck level and pitch. See *Adjust Deck Level & Pitch* on page 29.

Adjust Deck Level & Pitch

Level and pitch the mower with the nuts on the deck-lift links.

TIP: Place supports under the mower deck's **rear edge** to support the deck and ease adjustment. DO NOT position supports under the reinforced leading edge at the front of the deck.

1. Stop engine, engage parking brake, remove key, and wait for moving parts to stop and for hot parts to cool.
2. Disconnect spark plug wires.

See Figure 45.

3. Loosen the upper jam nut on each deck-lift link needing adjustment.
4. Raise and lower deck at each adjustment point by turning the lower jam nut:
   - Turn nut clockwise to raise.
   - Turn nut counterclockwise to lower.

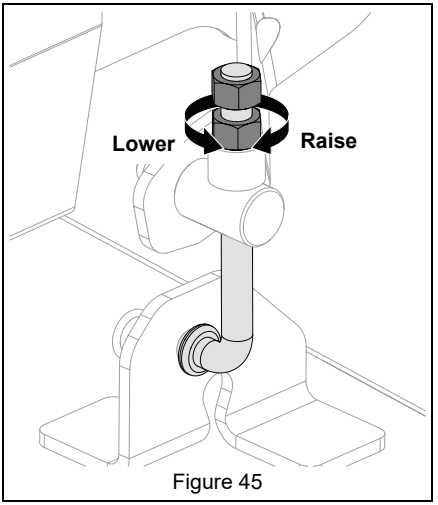

Figure 45

5. Take measurements to verify level and pitch and continue adjustments as necessary. See *Check Level & Pitch* on page 28.
6. Tighten upper jam nuts against lower jam nuts when adjustment is complete.

TROUBLESHOOTING

Problem	Probable Cause	Correction
Engine does not start.	Safety Interlock System is not engaged or is faulty.	Check Safety Interlock System. See *Check Parking Brake* on page 18.
	Fuel tank is empty.	Fill fuel tank. See *Start the Engine* on page 14.
	Fuel supply is contaminated.	Replace with clean fuel.
	Battery is discharged.	Charge battery. See *Charge Battery* on page 20.
	Connection between battery and battery cables is poor.	Tighten and/or clean battery and battery cables. See *Clean Battery* on page 20.
	Spark plug wire(s) are loose or spark plug(s) are faulty.	Connect spark plug wire(s) or replace spark plug(s). Refer to engine manual.
	Electrical system is faulty.	Contact your Ariens dealer.
	Engine is faulty.	Contact your Ariens dealer.
Engine runs rough.	Choke is in the on position.	Move choke to the off position.
	Air filter cartridge is plugged.	Clean or replace air filter cartridge. Refer to engine manual.
	Engine is faulty.	Contact your Ariens dealer.
Engine overheats.	Engine oil level is low.	Add engine oil. Refer to engine manual.
	Cooling fins are plugged.	Clean engine. Refer to engine manual.
	Engine is faulty.	Contact your Ariens dealer.
Unit does not drive.	The transaxles are bypassed.	Engage levers. See *Move Unit Manually* on page 15.
	Transaxle drive belt is faulty.	Contact your Ariens dealer.
	Transaxles are faulty.	Contact your Ariens dealer.
PTO malfunctions.	Operator presence switch is not engaged.	Activate switch by sitting on operator seat.
	Operator presence switch is faulty.	Contact your Ariens dealer.
	PTO belt is faulty.	Replace belt. See *Replace Belts* on page 24.
	PTO switch, wiring, connectors or clutch are faulty.	Contact your Ariens dealer.
Unit moves with engine off and parking brake engaged.	Parking brake needs adjustment.	Adjust parking brake lever. See *Adjust Parking Brake* on page 23.
	Parking brake is faulty.	Contact your Ariens dealer.
Unit does not drive straight.	Tire pressure is incorrect.	Check tire pressure. See *Specifications* on page 33.
	Steering lever limiter bolts need adjustment.	See *Adjust Tracking* on page 21.
Unit creeps when steering levers are in neutral position.	Transmission and/or linkage need adjustment.	Contact your Ariens dealer.

TROUBLESHOOTING		
Problem	**Probable Cause**	**Correction**
Poor cutting quality.	Mower blades not level or mower deck pitch is incorrect.	Level and adjust pitch of mower deck. See *Level & Pitch Mower Deck* on page 28.
	Mower blades are dull or faulty.	Sharpen or replace mower blades. See *Check Mower Blades* on page 18.
	Mowing speed is too fast.	Drive slower when cutting grass.
	Belt tension or condition is poor.	Replace mower belts. See *Replace Belts* on page 24.
	Cutting height is too low.	Do not set height of cut too low. For very tall grass, mow twice.

STORAGE

WARNING: AVOID INJURY. Read and understand the entire *Safety* section before proceeding.

SHORT-TERM STORAGE

IMPORTANT: NEVER wash unit with high-pressure water or store outdoors.

1. Allow unit to cool and clean with mild soap and water.
2. Tighten all hardware to correct specifications.
3. Inspect unit for visible signs of wear or damage. Repair as needed.
4. Prepare fuel system for storage.

NOTICE: Ariens recommends using a quality fuel stabilizer in all fuel. Gasoline left in the fuel system without a stabilizer, even for short periods of time, deteriorates and leaves gummy deposits in the system that may damage the carburetor and fuel hoses, filter and tank. For the best effectiveness, add stabilizer to all fuel containers whenever purchasing fuel. Add the stabilizer to the container before adding fuel.

   a. Add fuel stabilizer (see *Service Parts* on page 17) or equivalent according to manufacturer's instructions to the fuel tank and any fuel containers with remaining fuel.
   b. Run engine outdoors for at least 5 minutes to allow stabilizer to reach the carburetor.

5. Turn ignition key to off position and remove from ignition.
6. Store unit in a cool, dry, protected area. DO NOT store unit outdoors.

LONG-TERM STORAGE

1. Perform short-term storage procedures.
2. Lubricate as directed in *Maintenance* on page 16.
3. Touch-up all scratched painted surfaces.
4. Remove and charge battery. Refer to your unit's Service Manual. Store battery in a cool, dry, protected area.
5. Store unit in a cool, dry, protected area. Do not store unit outdoors.

START-OF-SEASON PREPARATION

1. Before adding fuel for the first time after long-term storage, add fresh, stabilizer-treated fuel to fuel tank and any fuel containers with remaining fuel.
2. Charge and install the battery.

ACCESSORIES

See your Ariens dealer for a complete list of compatible accessories and attachments for your unit.

Description	Part No.
Trailer Hitch Kit	71502800
36" Roller	71503300
48" Dethatcher	71503400
Spreader	71503600
48" Aerator	71508200
Arm Rest Kit	71508400
Hub Caps (2)	71508800
15-Gallon Sprayer	71510300
34" Mulch Kit	71510800
42" Mulch Kit	71516000
52" Mulch Kit	71514000
Seat Cover – Plain	71515000
Zero-Turn Cover	71515200
LED Light Kit (Models 915281, 915283, 915285)	71517600
Universal Flextend Arm Rest	79102300
34" Bagger	81505000
42" Bagger	81505100
52" Bagger	81505200
LaserEdge Blade Kit – (42" models)	71516600

SPECIFICATIONS

Model Number	915281	915283	915285	915291
Description	Edge 34	Edge 42	Edge 52	EDGE LT 42
Engine	Briggs & Stratton Intek 40R8		Kawasaki FR651	Briggs & Stratton EX1900
Engine Displacement – cm^3 (in^3)	656 (40)		726 (44.3)	540 (33)
Maximum RPM – No Load	3650 ± 100			3600 ± 100
Oil Capacity	Refer to engine manual.			
Liquid or Air Cooled	Air			
Transmission				
Type	Hydrostatic Drive			
Oil	15W-50 Full-Synthetic Hydraulic Fluid (P/N 00057100) or equivalent			
Drive				
Forward Maximum – km/h (mph)	9.6 (6.0)			
Reverse Maximum – km/h (mph)	4.8 (3.0)			
Turning Radius	Zero			
Brakes	Parking			
Electrical				
Starter	Electric			
Battery	12 Volt 12A-190 CCA (U1 Replaceable)			
PTO (Power Take-off)	Electric PTO Clutch / Brake			
Fuel				
Fuel Tank Capacity – Liter (gal)	9.5 (2.5)			
Type	See Engine Manual			
Size and Weight				
Length – cm (in)	172.7 (68)			
Width – cm (in)	113.8 (44.8)	139.2 (54.8)	155.2 (61.1)	139.2 (54.8)
Height – cm (in)	102.9 (40.5)			
Weight – kg (lbs)	202.8 (447)	231.3 (510)	254.0 (560)	213.2 (470)
Tires				
Front Tire Size – in	11 x 4-5			
Rear Tire Size – in	18 x 6.5-8	18 x 8.5-8	18 x 9.5-8	18 x 6.5-8
Recommended Front Tire Pressure – kPa (psi)	262.0 – 317.2 (38 – 46)			
Recommended Rear Tire Pressure – kPa (psi)	62.1 – 75.8 (9 – 11)			
Mower Deck				
Cutting Height – cm (in)	3.8 – 11.4 (1.5 – 4.5)			
Cutting Width – cm (in)	86 (34)	106.7 (42)	132.1 (52)	106.7 (42)
Mower Deck Lift	Foot Operated			

CRITICAL TORQUES			
Component	Torque **(lb-in)**	Torque **(lb-ft)**	Torque **(N•m)**
Spindle to deck	336 – 456	28 – 38	38 – 52
Blade to spindle	360 + 210° ±5° (DO NOT exceed 1080)	30 + 210° ±5° (DO NOT exceed 90)	41 + 210° ±5° (DO NOT exceed 42)
Engine to frame (Models 915281, 915283, 915291)	384 – 456	32 – 38	43 – 52
Engine to frame (Model 915285)	240 – 312	20 – 26	27 – 35
Clutch to engine	564 – 684	47 – 57	64 – 77
Axle bolt	360 – 432	30 – 36	41 – 49

Outdoor Power Equipment Limited Warranty

AriensCo warrants to the **original purchaser** that Ariens® brand products purchased on or after 09/01/2022 will be free from defects in material and workmanship for the time period noted in the chart below. Equipment put to personal use around a single household or residence is considered “Residential Use.” Equipment put to any business use (agricultural, commercial, or industrial) or used at multiple locations is considered “Commercial Use.” If any product is rented or leased, then the duration of these warranties shall be 90 days after the date of purchase.

An authorized Ariens dealer will repair any defect in material or workmanship, and repair or replace any defective part, subject to the conditions, limitations and exclusions set forth herein. Such repair or replacement will be free of charge (labor and parts) to the original purchaser; except as noted below. Pick-up and delivery are at the owner’s expense.

The warranty code is found on the model and serial number identification label on the unit.

Warranty Code	Product Group	Warranty Period
AA	Serialized Attachments	1 Year.
CH, CQ	ZENITH Mowers	4 Years or 750 Hours.*
CL	ARROW Mowers	5 Years or 1000 Hours.* No Hour Limit for First 2 Years.
HD	RAZOR Walk-Behind Mowers	3 Years Residential Use. 90 Days Commercial Use.
HE	EDGE Mowers	2 Years or 150 Hours.*
HF	IKON Mowers	3 Years or 300 Hours.*
HG	RIDGELINE® Mowers	4 Years or 400 Hours.*
HH	APEX® Mowers	4 Years or 500 Hours.*
HI	RAZOR Walk-Behind Mowers	4 Years Residential Use. 90 Days Commercial Use.
HJ	EDGE LT Mowers	2 Years Residential Use. No Commercial Warranty.
PA	921-Series Brushes	3 Years Residential Use. 90 Days Commercial Use.
PB	926-Series Brushes	3 Years Residential Use. 1 Year Commercial Use.
SA	Professional Sno-Thro®	3 Years Residential Use. 1 Year Commercial Use.
SB	Compact, Deluxe and Platinum Sno-Thro and Path-Pro	3 Years Residential Use. 90 Days Commercial Use.
SC	S18	2 Years Residential Use. 90 Days Commercial Use.
SD	Deluxe and Platinum EFI Sno-Thro	3 Years Residential Use. 90 Days Commercial Use.
SE	920-Series Classic Sno-Thro	3 Years Residential Use. 90 Days Commercial Use.
SF	MAMMOTH® Tractor	2 Years or 500 Hours.*

* Whichever comes first.

Special Extensions

The chart below details special **extensions** to warranty terms. Warranty terms are total time periods covered. If any product is rented or leased, there are no extensions to the 90-day warranty.

Warranty Code	Warranty Term Extension	Warranty Period	Detail
SA	Cast Iron Auger Gear Case	5 Years.	Warranty is for parts only after the initial warranty period. Components are covered for manufacturer’s defect only, not wear.
SB, SD	Cast Iron Auger Gear Case	5 Years Residential Use. 1 Year Commercial Use.	
CL	Mower Deck Shell and Main Frame	Lifetime Limited.	

Exclusions and Limitations

The charts below detail special **exclusions and limitations** to this warranty.

Warranty Term Exclusions	Warranty Period
Air filters, auger paddles, brake arms, brake linings, brake shoes, brushes, cutters, fuel filters, halogen headlights, knives, halogen light bulbs, lubricants, mower blades, oil, oil filters, spark plugs, scraper blades, shear bolts and skid shoes.	Components are not covered under warranty.

Hydro-Gear Transaxle Limitation
See Hydro-Gear warranty. The warranty is administrated by AriensCo. Refer to www.ariens.com for warranty statement.

Warranty Term Limitations	Warranty Period
Cloth, Plastic and Rubber Components. Mufflers, Tires and Belts.	Components are covered for manufacturer's defect only, not wear.
Parker Actuators	1 Year.

Exclusions – Items Not Covered by This Warranty

- Parts that are not genuine Ariens service parts are not covered by this warranty and may void the warranty if the parts result in premature wear or damage to the product.
- Damages resulting from the installation or use of any part, accessory, or attachment which is not approved by AriensCo for use with product(s) identified herein are not covered by this warranty.
- Any misuse, alteration, improper assembly, improper adjustment, neglect, or accident which requires repair is not covered by this warranty.
- Repairs or adjustments required due to failure to use fresh fuel or failure to properly prepare the unit for periods of non-use.
- **Use of gasoline blends exceeding 10% ethanol voids any and all warranties.**
- **Any tampering with the hour meter voids any and all warranties.**
- Products are designed to the specifications in the area that the product was originally distributed. Different areas may have significantly different legal and design requirements. This warranty is limited to the requirements in the area in which the unit was originally distributed. AriensCo does not warrant this product to the requirements of any other area. Warranty service is limited to service within the area originally distributed.
- In countries other than the United States and Canada, contact the AriensCo dealer for warranty policies that govern within your country. Rights may vary from country to country and within any one country.

Evaporative Emissions Control Warranty Exception

As required by the California Air Resources Board (CARB) and the US Environmental Protection Agency (EPA) the evaporative emissions control system is warranted to the ultimate purchaser, and any subsequent owner, for two years.

The CARB and EPA evaporative emissions control system warranty is described in a separate evaporative emission control warranty statement.

Battery Warranty

Battery warranty is one year. Units used for rental or lease have no exceptions to the 90-day warranty. Total battery claim reimbursement will not exceed 65.00 USD.

Transmissions

The chart below details transmission warranty information. Transmission warranty terms may vary from the specific terms of this warranty. If inconsistent, the terms of the transmission warranty shall apply to the transmission and its component parts.

Transmission Manufacturer	Detail
Hydro-Gear Transaxle	See Hydro-Gear warranty. The warranty is administrated by AriensCo. Refer to www.ariens.com for warranty statement.
Parker Hannifin Drive & Valve Systems	Parker Transaxles, Pumps, Wheel Motors and Valves* are warranted for the length of equipment warranty period. Refer to Warranty Code chart above. Warranty is administered by AriensCo.

* Parker Actuators see Limitations chart above.

Engines

The chart below details engine warranty information. Engine warranty terms may vary from the specific terms of this warranty. If inconsistent, the terms of the engine warranty shall apply to the engine and its component parts.

Engine Manufacturer	Detail
Ariens AX	Ariens-branded engines are warranted by the manufacturer and the warranty is administrated by AriensCo. Refer to the engine manual or www.ariens.com for warranty statements.
Briggs & Stratton, Kawasaki, Kohler	Covered by the engine manufacturer's warranty. Refer to the engine manufacturer's warranty statements.

Parts and Accessories

Service replacement parts and non-serialized accessories are warranted for 90 days from date of purchase. Labor is not included.

Customer Responsibilities

Register the product immediately at the time of sale. If the dealer does not register the product, the customer must register the unit on-line at www.ariens.com.

To obtain warranty service, the **original purchaser** must:

- Ensure that the maintenance and adjustments explained in the Operator's Manual are routinely completed.
- Promptly notify AriensCo or an authorized Ariens service representative of the need for warranty service.
- Transport the product to and from the place of warranty service at owner's expense.
- Have the warranty service performed by an authorized Ariens service representative.

To find an authorized dealer use the dealer locator on our websites, or contact us by mail or phone.

Globally (Except Australia or New Zealand):	Australia:	New Zealand:
AriensCo 655 W. Ryan Street Brillion, WI 54110 Phone: (920) 756 - 4688 www.ariens.com	Roy Gripske & Sons Pty Ltd 11 Sodium Street Narangba Queensland 4504 Australia Phone: (61130) 036 3004 www.rgs.com.au	Masport Ltd 320 Ti Rakau Drive East Tamaki Auckland 2013 New Zealand Phone: 0800 627 7678 www.masport.co.nz

Disclaimer

AriensCo may from time to time change the design of its products. Nothing contained in this warranty shall be construed as obligating the AriensCo to incorporate such design changes into previously manufactured products, nor shall such changes be construed as an admission that previous designs were defective.

Limitation of Remedy and Damages

AriensCo liability under this warranty, and under any implied warranty that may exist, is limited to repair of any defect in workmanship, and repair or replacement of any defective part. AriensCo shall not be liable for incidental, special, or consequential damages (including lost profits). Some states do not allow the exclusion of incidental or consequential damages, so the above limitation or exclusion may not apply to you.

AriensCo shall not be held liable for damages, including premature wear and tear, or injuries caused by installation of unauthorized parts and accessories or for parts and accessories not installed by an authorized Ariens dealer.

Australian Consumer Law

The following applies solely to warranties subject to Subsection 102(1) of the Australian Consumer Law: Our goods come with guarantees that cannot be excluded by the Australian Consumer Law. You are entitled to a replacement or refund for a major failure and for compensation for any other reasonably foreseeable loss or damage. You are also entitled to have the goods repaired or replaced if the goods fail to be of acceptable quality and failure does not amount to a major failure.

Disclaimer of Further Warranty

AriensCo makes no warranty, express or implied, other than what is expressly made in this warranty. If the law of your state provides that an implied warranty of merchantability, or an implied warranty of fitness for particular purpose, or any other implied warranty, applies to AriensCo, then any such implied warranty is limited to the duration of this warranty. Some states do not allow limitations on how long an implied warranty lasts, so the above limitation may not apply to you.

This warranty gives you specific legal rights, and you may also have other rights which vary from region to region.

ARIENS

655 WEST RYAN ST.
BRILLION, WI 54110

WWW.ARIENS.COM

SEE PARTS, ACCESSORIES, AND ATTACHMENTS FOR YOUR UNIT AT PARTS.ARIENS.COM.

A PARTS MANUAL FOR YOUR UNIT IS AVAILABLE FOR FREE DOWNLOAD OR PURCHASE AT ARIENS.COM.

WARNING: Cancer and Reproductive Harm - www.P65Warnings.ca.gov

ARIENS|CO