EMPOWER YOUR FITNESS

# User Manual

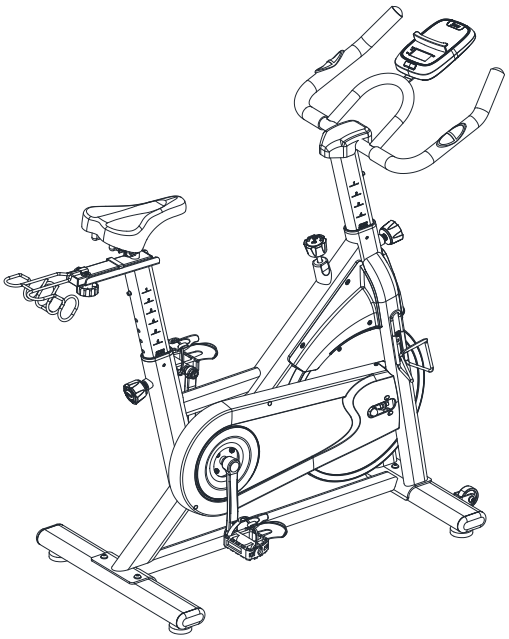

## Interactive Smart Magnetic Exercise Bike

**SB100**

**EN**

**IMPORTANT!** Please retain owner's manual for maintenance and adjustment instructions. Your satisfaction is very important to us, **PLEASE DO NOT RETURN UNTIL YOU HAVE CONTACTED US.**

# Important Safety Information

We thank you for choosing our product. To ensure your safety and health, please use this equipment correctly. It is important to read this entire manual before assembling and using the equipment. Safe and effective use can only be achieved if the equipment is assembled, maintained, and used properly. It is your responsibility to ensure that all users of the equipment are informed of all warnings and precautions.

1. Before starting any exercise program, you should consult your physician to determine if you have any medical or physical conditions that could put your health and safety at risk or prevent you from using the equipment properly. Your physician's advice is essential if you are taking medication that affects your heart rate, blood pressure, or cholesterol level.
2. Be aware of your body's signals. Incorrect or excessive exercise can damage your health. Stop exercising if you experience any of the following symptoms: pain, tightness in your chest, irregular heartbeat, shortness of breath, lightheadedness, dizziness, or feelings of nausea. If you do experience any of these conditions, you should consult your physician before continuing with your exercise program.
3. Keep children and pets away from the equipment. The equipment is designed for adult use only.
4. Use the equipment on a solid, flat level surface with a protective cover for your floor or carpet. To ensure safety, the equipment should have at least 2 feet (60 cm) of free space all around it.
5. Ensure that all nuts and bolts are securely tightened before using the equipment. The safety of the equipment can only be maintained if it is regularly examined for damage and/or wear and tear.
6. Always use the equipment as indicated. If you find any defective components while assembling or checking the equipment, or if you hear any unusual noises coming from the equipment during exercise, discontinue use of the equipment immediately and do not use until the problem has been rectified.
7. Wear suitable clothing while using the equipment. Avoid wearing loose clothing that may become entangled in the equipment.
8. Do not place fingers or objects into the moving parts of the equipment.
9. The maximum weight capacity of this unit is 300 lbs (135 kg).
10. This equipment is not suitable for therapeutic use.
11. To avoid bodily injury and/or damage to the product or property, proper lifting and moving are required.
12. Your product is intended for use in cool and dry conditions. You should avoid storage in extreme cold, hot or damp areas as this may lead to corrosion and other related problems.
13. This equipment is designed for indoor and home use only; it is not intended for commercial use.

# Statement Of Purpose

The Interactive Smart Magnetic Exercise Bike empowers users with smooth and adjustable cardio training.

# Waste Disposal



JLL products are recyclable. At the end of its useful life please dispose of this article correctly and safely (local refuse sites).

# EU Declaration Of Conformity

You can find the declaration of conformity at the following link:
https://jllfitness.co.uk/pages/declaration-of-conformity

# Technical Data

Connectivity: Bluetooth LE
Frequency Range: 2400~2483.5 Mhz
Transmitting Power: 0 dBm

# Pre-Assembly Check List

When you open the carton, you will find the following parts:

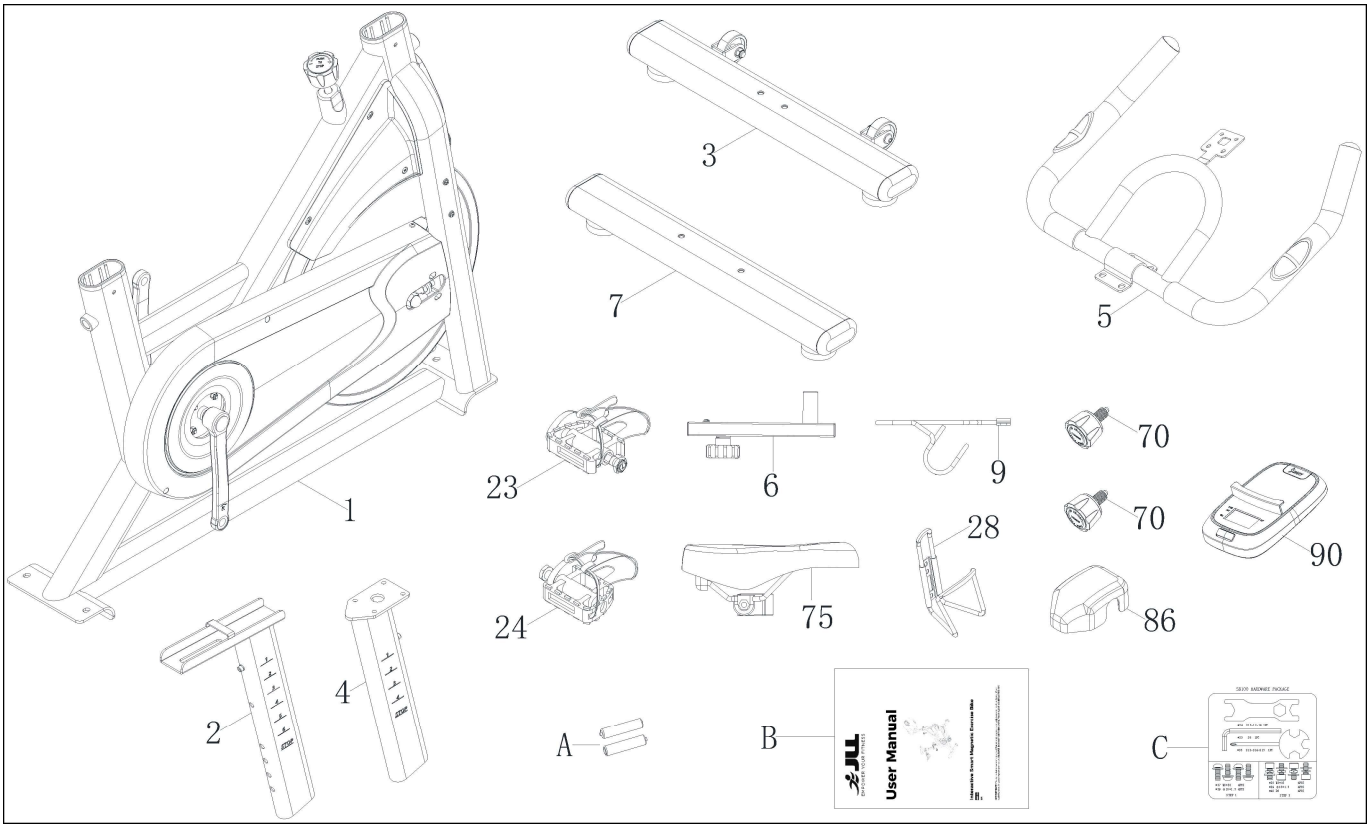


| No. | Description | Spec. | Qty. |
|---|---|---|---|
| 1 | Main Frame | | 1 |
| 2 | Seat Post | | 1 |
| 3 | Front Stabilizer | | 1 |
| 4 | Handlebar Post | | 1 |
| 5 | Handlebar | | 1 |
| 6 | Seat Slider | | 1 |
| 7 | Rear Stabilizer | | 1 |
| 9 | Dumbbell Rack | | 1 |
| 23 | Left Pedal | 9/16 L | 1 |

| No. | Description | Spec. | Qty. |
|---|---|---|---|
| 24 | Right Pedal | 9/16 R | 1 |
| 28 | Bottle Holder | | 1 |
| 70 | Adjustment Knob | | 2 |
| 75 | Seat | | 1 |
| 86 | Handlebar Cover | | 1 |
| 90 | Computer | SF-L2306M | 1 |
| A | Battery | 1.5V AAA | 2 |
| B | Manual | | 1 |
| C | Hardware Package | | 1 |

# Hardware Package

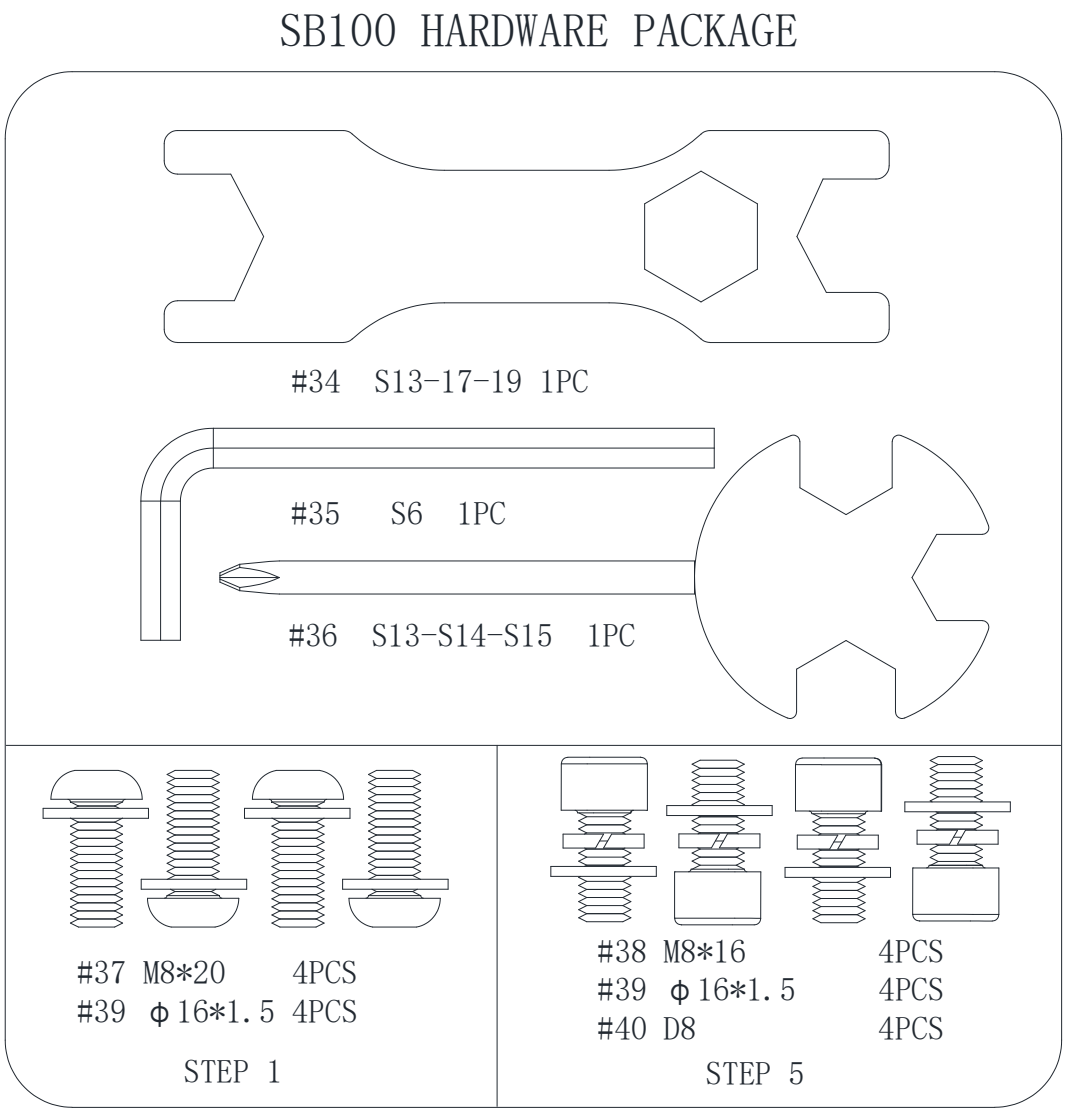


**Ordering Replacement Parts**

Please provide the following information in order for us to accurately identify the part(s) needed:

- ✓ The model number
- ✓ The product name
- ✓ The part number

Please contact us at contact@jllfitness.co.uk or +44 (0) 800 6123 988.

# Warning Labels






***Note*** failure to follow these instructions will result in overtightening the nut to the pedal bolt.
**Left Pedal**: hold the left pedal bolt with your left hand, turn the nut away from you to remove it.
**Right Pedal**: hold the right pedal bolt with your right hand, turn the nut away from you to remove it.

L

Pedal Installation & Maintenance Guide

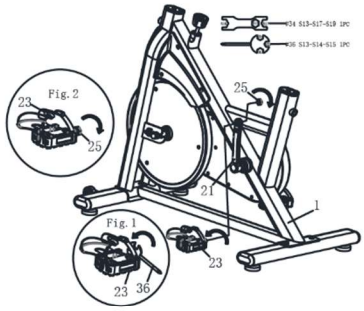


L

Before installation, please make sure you have **Left Pedal (#23)** in hand. Align the **Left Pedal (#23)** with the **Left Crank (#21)** at 90°. Turn the pedal bolt on the **Left Pedal (#23)** ***COUNTER-CLOCKWISE*** as tightly as you can with your hand. Then, use the **Spanner (#36)** to tighten and secure. Turn the **Left Nylon Nut (#25)** ***CLOCKWISE*** as tightly as you can with your hand. Use the **Spanner (#36)** to hold the pedal bolt on the **Left Pedal (#23)** and use **Open End Wrench (#34)** to turn the **Left Nylon Nut (#25)** ***CLOCKWISE*** at the same time, until it is tightened onto the **Left Crank (# 21)**. Always tighten by hands first then tighten with the spanner and open end wrench.

NOTE: Reverse pedaling may loosen the pedal and damage the threads. Always check the pedals to ensure that it's secured tightly. If the pedals haveloosened, secure the threads with the provide spanner and open end wrench to ensure safely.

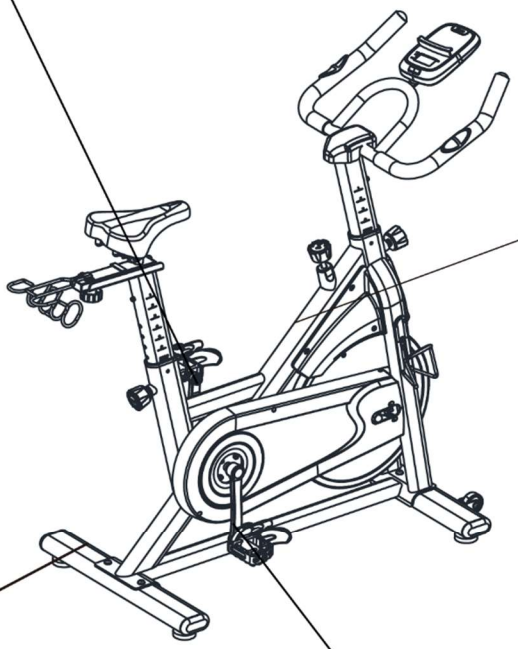

**WARNING**

Push down on the tension control knob to immediately stop the bike.

DO NOT ATTEMPT TO REMOVE YOUR FEET FROM THE PEDALS OR DISMOUNT THE BIKE UNTIL BOTH THE PEDALS AND THE FLYWHEEL HAVE COMPLETELY STOPPED SPINNING.

Failure to do so may result in serious bodily injury.

**WARNING**

**300 LBS/135 KG Weight capacity**

**Keep children and pets away from equipment when in use.**

Failure to comply with these warnings could result in serious injury or death. Please read all warnings and instructions before using the machine. Consult your physician prior to beginning any exercise program. Make sure all nuts and bolts are securely tightened before each use. Follow all the instructions in the manual. For Customer Service, please contact: +44 (0)800 6123 988 or email us at contact@jllfitness.co.uk.

R

Pedal Installation & Maintenance Guide

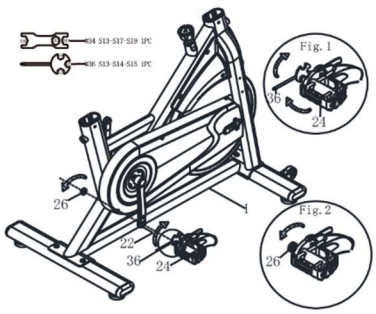


R

Before installation, please make sure you have **Right Pedal (#24)** in hand. Align the **Right Pedal (#24)** with the **Right Crank (#22)** at 90°. Turn the pedal bolt on **Right Pedal (#24)** ***CLOCKWISE*** as tightly as you can with your hand. Then, use the **Spanner (#36)** to tighten and secure. Turn the **Right Nylon Nut (#26)** ***COUNTER-CLOCKWISE*** as tightly as you can with your hand. Use the **Spanner (#36)** to hold the pedal bolt on the **Right Pedal (#24)** and use **Open End Wrench (#34)** to turn **Right Nylon Nut (#26)** ***COUNTER-CLOCKWISE*** at the same time, until it is tightened onto the **Right Crank (#22)**. Always tighten by hands first then tighten with the spanner and open end wrench.

NOTE: Reverse pedaling may loosen the pedal and damage the threads. Always check the pedals to ensure that it's secured tightly. If the pedals haveloosened, secure the threads with the provide spanner and open end wrench to ensure safely.

# Assembly Instructions

We value your experience using JLL products. For assistance with parts or troubleshooting, please contact us at contact@jllfitness.co.uk or +44 (0) 800 6123 988.

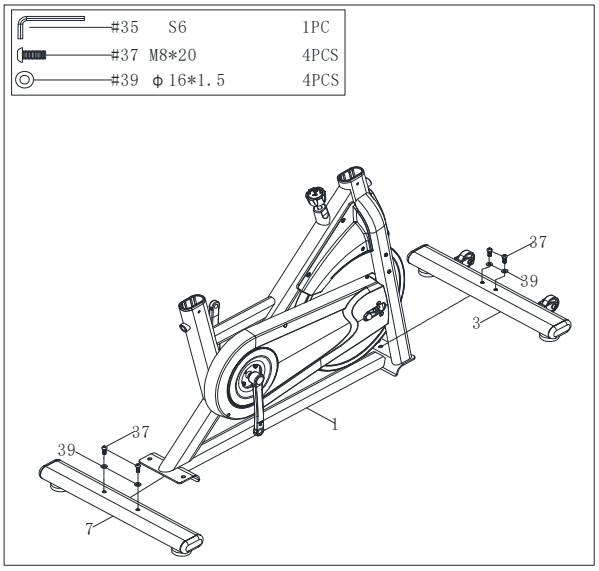


**STEP 1:**

Attach the **Front** and **Rear Stabilizers (No. 3 & No. 7)** to the **Main Frame (No. 1)** using 4 **Screws (No. 37)** and 4 **Washers (No. 39)**. Tighten and secure with **Allen Wrench (No. 35)**.

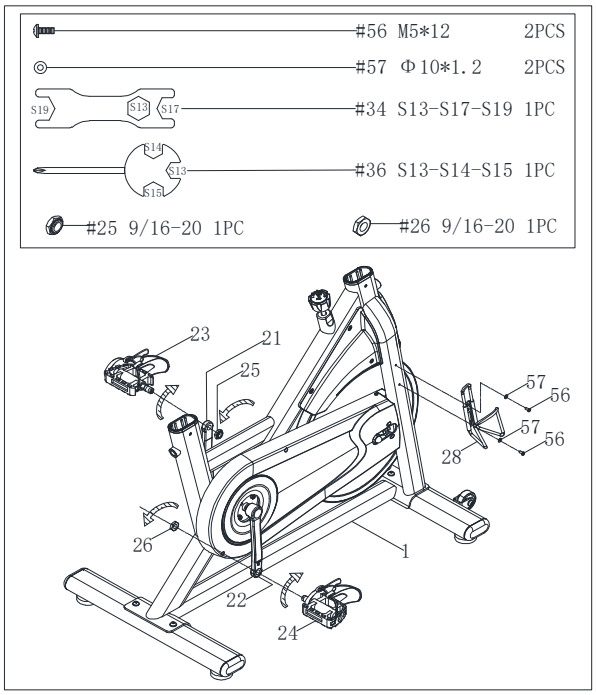


**STEP 2:**

**WARNING!** Read instructions carefully as improper assembly may cause permanent damage to your bike.

Remove **Left & Right Nylon Nuts (No. 25 & No. 26)** from **Left Pedal (No. 23)** and **Right Pedal (No. 24)** with **Open End Wrench (No. 34)** and **Spanner (No. 36)**. **Left Pedal (No. 23)** is marked "L" on it, **Right Pedal (No. 24)** is marked "R" on it.

Align the **Left Pedal (No. 23)** with the **Left Crank (No. 21)** at 90˚. Turn the pedal bolt on the **Left Pedal (No. 23)** *COUNTER-CLOCKWISE* as tightly as you can with your hand. Then, use **Spanner (No. 36)** to tighten and secure. Turn the **Left Nylon Nut (No. 25)** *CLOCKWISE* as tightly as you can with your hand. Use **Spanner (No. 36)** to hold the pedal bolt on the **Left Pedal (No. 23)** and use **Open End Wrench (No. 34)** to turn the **Left Nylon Nut (No. 25)** *CLOCKWISE* at the same time, until it is tightened onto the **Left Crank (No. 21)**.

Align the **Right Pedal (No. 24)** with the **Right Crank (No. 22)** at 90˚. Turn the pedal bolt on **Right Pedal (No. 24)** *CLOCKWISE* as tightly as you can with your hand. Then, use **Spanner (No. 36)** to tighten and secure. Turn the **Right Nylon Nut (No. 26)** *COUNTER-CLOCKWISE* as tightly as you can with your hand. Use **Spanner (No. 36)** to hold the pedal bolt on the **Right Pedal (No. 24)** and use **Open End Wrench (No. 34)** to turn **Right Nylon Nut (No. 26)** *COUNTER-CLOCKWISE* at the same time, until it is tightened onto the **Right Crank (No. 22)**.

Remove 2 **Screws (No. 56)** and 2 **Washers (No. 57)** from the **Main Frame (No. 1)** with **Spanner (No. 36)**. Attach the **Bottle Holder (No. 28)** to the **Main Frame (No. 1)** using 2 **Screws (No. 56)** and 2 **Washers (No. 57)** that were removed. Tighten and secure with **Spanner (No. 36)**.

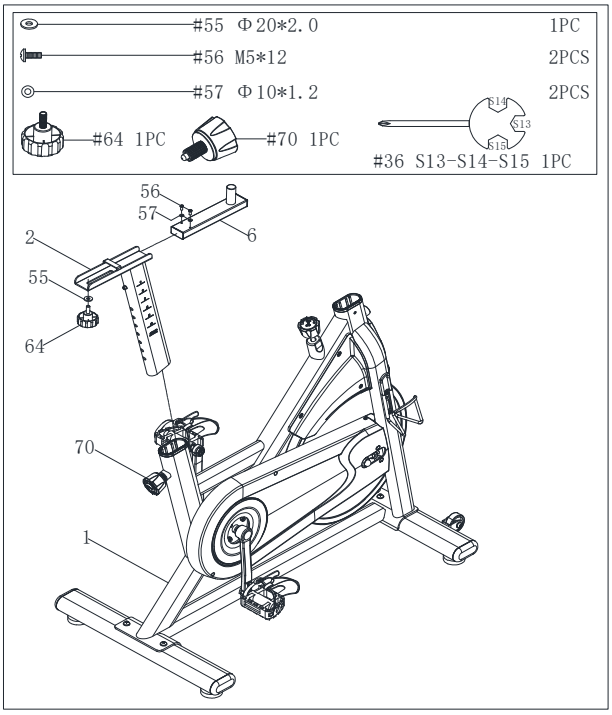


**STEP 3:**

Attached the **Adjustment Knob (No. 70)** to the **Main Frame (No. 1)** and pull it out. Insert the **Seat Post (No. 2)** into the **Main Frame (No. 1)** and adjust to the desired position. Tighten and secure with **Adjustment Knob (No. 70)**.

Remove 2 **Screws (No. 56)**, 2 **Washers (No. 57)**,1 **Washer (No. 55)** and 1 **Adjustment Knob (No 64)** from **Seat Slider (No. 6)** with **Spanner (No. 36)**.

Attached the **Seat Slider (No. 6)** to the **Seat Post (No. 2)** with 1 **Washer (No. 55)** and 1 **Adjustment Knob (No 64)** that were removed, adjust the **Seat Slider (No. 6)** to your desired position, tighten and secure with **Adjustment Knob (No 64)**.

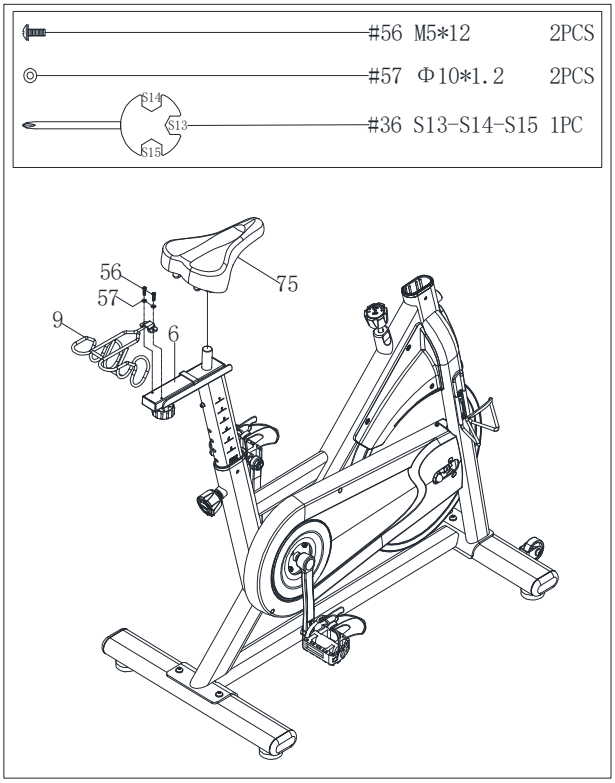


**STEP 4:**

Attached the **Dumbbell Rack (No. 9)** to the **Seat Slider (No. 6)** with 2 **Screws (No. 56)** and 2 **Washers (No. 57)** that were removed in **STEP 3**, tighten and secure with **Spanner (No. 36)**.

Attached the **Seat (No. 75)** onto the **Seat Slider (No. 6)**, adjust the direction and angle to the desired position, tighten and secure with **Spanner (No. 36)**.

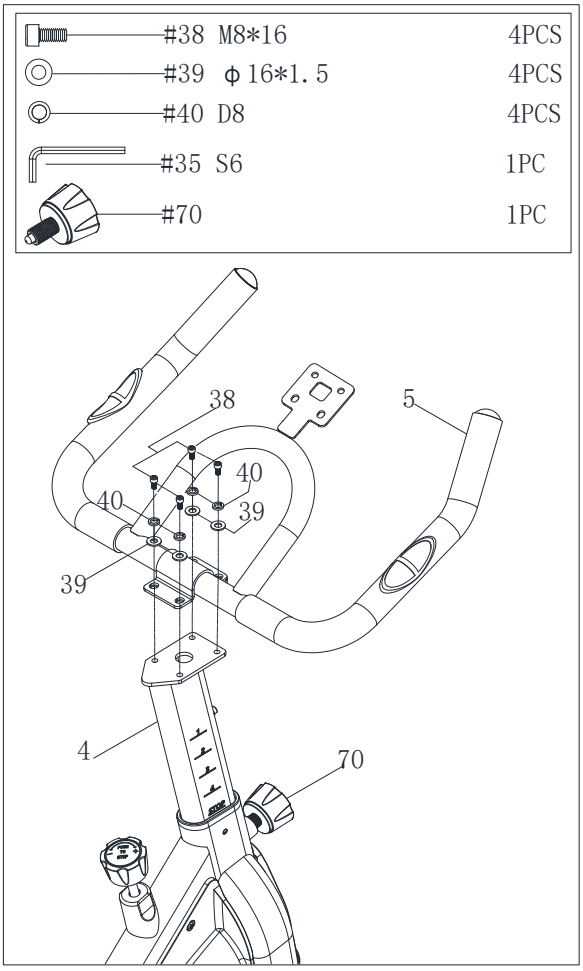


**STEP 5:**

Attached the **Adjustment Knob (No. 70)** to the **Main Frame (No. 1)** and pull it out.

Insert the **Handlebar Post (No. 4)** into the tube located on the front of the **Main Frame (No. 1)**. Adjust the **Handlebar Post (No. 4)** to the desired height, tighten and secure with **Adjustment Knob (No. 70)**.

Attach the **Handlebar (No. 5)** to the **Handlebar Post (No. 4)** using 4 **Screws (No. 38)**, 4 **Washers (No. 39)** and 4 **Spring Washer (No. 40)**, tighten and secure with **Allen Wrench (No. 35)**.

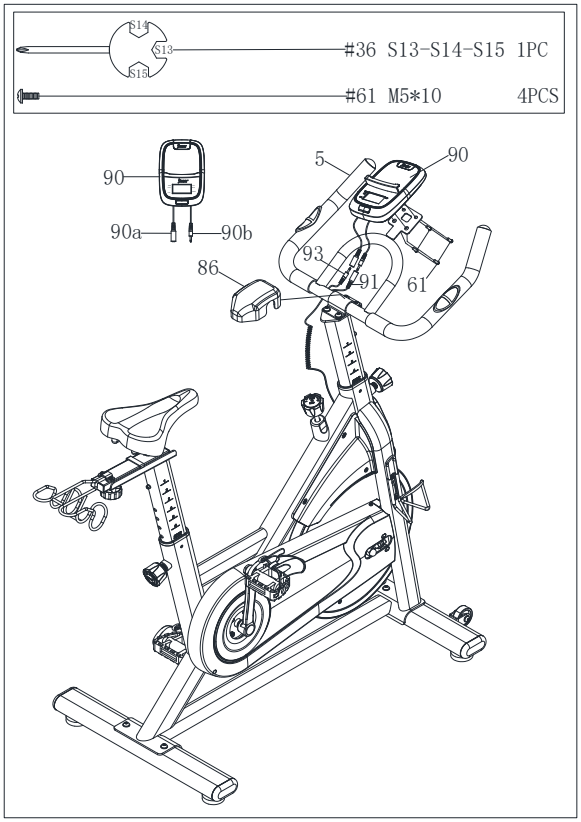


**STEP 6:**

Remove 4 **Pan Head Screws (No. 61)** from the **Computer (No. 90)** with **Spanner (No. 36)**.

Attach the **Computer (No. 90)** onto the bracket of the **Handlebar (No. 5)** using 4 **Pan Head Screws (No. 61)** that were removed, tighten and secure with **Spanner (No. 36)**.

Connect the **Computer Wire B (No. 90b)** with the **Sensor Wire (No. 91),** and connect the **Computer Wire A (No. 90a)** with the **Pulse Wire (No. 93)**.

Attach the **Handlebar Cover (No. 86)** onto the **Handlebar (No. 5)**.

*The assembly is complete!*

# Maintenance & Adjustment Guide

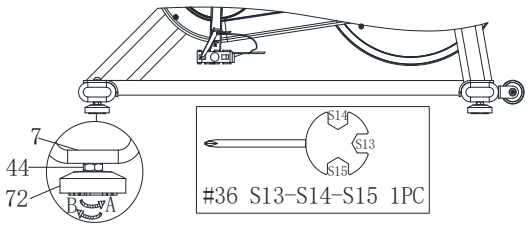


**ADJUSTING THE HEIGHT AND BALANCE**

In order to achieve a smooth and comfortable ride, you must ensure that the stability of the bike is secured. If you notice that the bike is unbalanced during use, you should adjust the **Foot Pads (No. 72)** located beneath the **Front and Rear Stabilizers (No. 3 & No. 7)** of the bike. To do so, use **Spanner (No. 36)** to loosen **Black Hex Nut (No. 44)** by turning it *clockwise* (direction B). With the **Black Hex Nut (No. 44)** loosened, rotate the **Foot Pad (No. 72)** until it sits level with the surface that the bike is on. When you have finished adjusting the **Foot Pads (No. 72)**, use **Spanner (No. 36)** to re-tighten the **Black Hex Nut (No. 44)** by turning it *counter-clockwise* (direction A). If required, repeat this process to adjust the remaining **Foot Pads (No. 72)**.

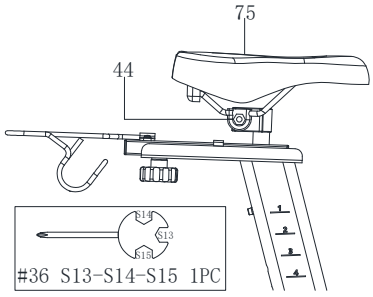


**ADJUSTING THE SADDLE**

After adjusting the direction and angle of the **Seat (No. 75)**, tighten and secure the **Black Hex Nut (No. 44)** to the **Seat (No. 75)** with **Spanner (No. 36)**.

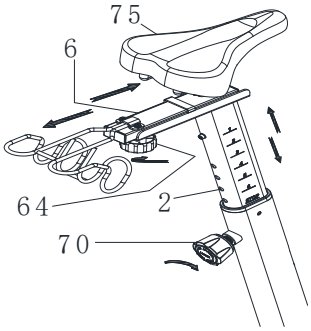


**ADJUSTING THE SEAT**

The seat of this bike is fully adjustable as it moves *Up*, *Down, Fore (forward), Aft (backward).*
To adjust the height of the **Seat Post (No. 2)**, loosen and pull the **Adjustment Knob (No. 70)** outward, then raise or lower the **Seat (No. 75)** to the desired height. Once adjusted, re-insert and tighten the **Adjustment Knob (No. 70)** to secure the **Seat Post (No. 2)** in place.
To adjust the **Seat (No. 75)** back and forth, loosen the **Adjustment Knob (No. 64)** then slide the **Seat Slider (No. 6)** to the desired position. Once positioned, re-tighten the **Adjustment Knob (No. 64)** to secure the **Seat Slider (No. 6)** in place.

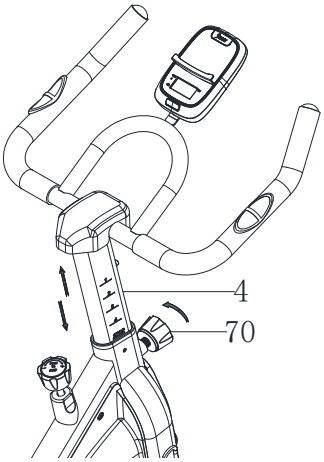


**ADJUSTING THE HANDLEBAR**

It is important that the handlebar and seat are both set to the correct height of your body.

To adjust the handlebar height, loosen and pull the **Adjustment Knob (No. 70)** outward, then slide the **Handlebar Post (No. 4)** up or down to the desired height. Once adjusted, re-insert and tighten the **Adjustment Knob (No. 70)** to secure the **Handlebar Post (No. 4)** in place.

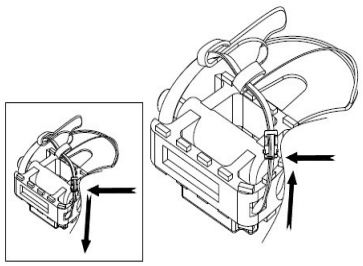

**PEDAL STRAP ADJUSTMENT**

Your feet should be secured in the toe clips during exercise. Place your feet as far forward into the toe-clips as you can. With your feet in place, turn the crank to bring one foot to within arm's reach, grasp the pedal strap and pull it upward to tighten the toe-clip cage, then insert the strap back into the hoop of the toe-clip. Repeat this process to secure your other foot.

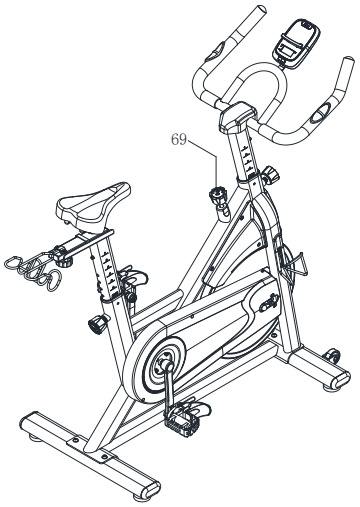


**ADJUSTING THE RESISTANCE**

Adjust the resistance of the bike using the **Tension Control Knob (No. 69)**. Increase the level of resistance by turning the **Tension Control Knob (No. 69)** to the RIGHT *(clockwise),* decrease the level of resistance by turning the **Tension Control Knob (No. 69)** to the LEFT *(counter-clockwise).*

**EMERGENCY BRAKE**

During use, users can stop the bike completely by pushing down on the **Tension Control Knob (No. 69)**. Pushing down on the **Tension Control Knob (No. 69)** will enforce the brake and bring the bike to an immediate stop.

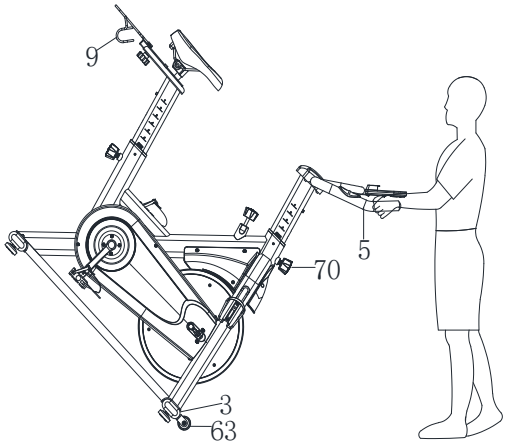


**TRANSPORTING THE BIKE**

To move the bike, first ensure that the **Handlebar (No. 5)** is properly secured. If the **Handlebar (No. 5)** is loose, tighten the **Adjustment Knob (No. 70)** to secure it. Next, stand at the front of the bike so that you're directly in front of the handlebar. Firmly grasp and hold each side of the **Handlebar (No. 5)**, place one foot on the **Front Stabilizer (No. 3)** and tilt the bike towards you until the transportation wheels on the **Front Stabilizer (No. 3)** touch the ground. With the **Transportation Wheels (No. 63)** on the ground, you can transport the bike to the desired location with ease.

**NOTE:** If there are dumbbells on the **Dumbbell Rack (No. 9)**, please remove the dumbbells. Always use caution when moving the bike. Unexpected impact, such as dropping the bike, may cause injury and affect the bike's operation.

**DISMOUNTING**

For your safety, it is recommended that you never attempt to dismount or remove your feet from the pedals until both the flywheel and pedals/cranks have come to a complete stop. Failure to follow this recommendation may lead to loss of control and/or serious injury.

Here are a few examples of how to safely dismount the bike:

1. Reduce the pedal speed until the pedals/cranks come to a complete stop.

2. Increase the resistance until the pedals/cranks come to a complete stop.

3. Push and hold the tension control knob down until the pedals/cranks come to a complete stop.

## Battery Installation & Replacement

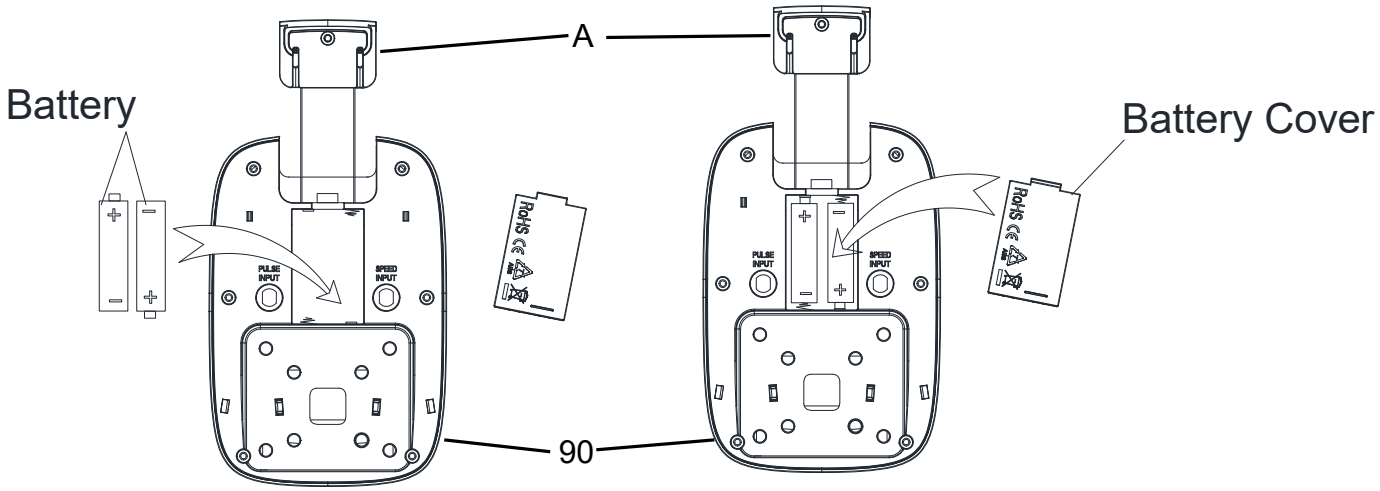


Dispose the old battery (1.5V, AAA) according to your regional guidelines.

## APP connection:

Connect Smart Equipment to SunnyFit App:

1. Scan to download SunnyFit from the app store:
2. Ensure that the Bluetooth function is turned on from your mobile device.
3. If this is your first time using the SunnyFit app, follow the in-app instructions to register for your free SunnyFit account and log in.
4. Begin any workout activity that matches your smart equipment, then follow the onscreen prompts to search for and connect to your smart equipment.
5. When connected, your stats and records will be displayed at the end of your course/session, and recorded in your account profile!

## Troubleshooting:

- If you are having trouble connecting your smart equipment, visit www.sunnyfit.com/guide or scan the QR code below:
- If you require additional support, please contact support@sunnyfit.com

# Exercise Computer

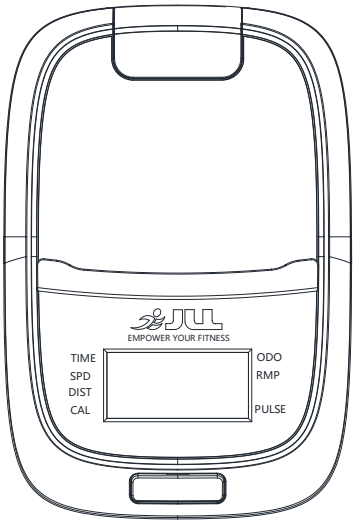


**BLUETOOTH :**

1. The Bluetooth icon will flash when the computer is on or wakes from sleep mode. If no Bluetooth connection is established within 3 minutes, the Bluetooth icon will turn off.

2. The Bluetooth icon will stay on when it is connected.

**WIRELESS HEART RATE**

1. The wireless heart rate icon will flash when the computer is on. If the heart rate monitor is not connected within 1 minute, the wireless heart rate icon will turn off.

2. After exercise resumes, the wireless heart rate icon will flash. If the heart rate monitor is not connected within 1 minute, the wireless heart rate icon will turn off.

3. When the computer wakes from sleep mode, the wireless heart rate icon will flash. If the heart rate monitor is not connected within 1 minute, the wireless heart rate icon will turn off.

4. The wireless heart rate icon will flash when the MODE key is pressed. If the heart rate monitor is not connected within 1 minute, the wireless heart rate icon will turn off.

5. The wireless heart rate icon will stay on when the heart rate monitor is connected.

**NOTE:** The heart rate monitor is not included. Wireless heart rate function works with SunnyFit Heart Rate Monitor HR200. HR200 can only connect to the computer when the wireless heart rate icon is flashing.

**FUNCTION BUTTON**

**MODE**

Press the button to switch display or automatically display through each function value in sequence every 6 seconds.

Hold the MODE key for 2 seconds to reset all values except ODO when Bluetooth is not connected.

Press and hold the MODE key for 6 seconds to disconnect from both the SunnyFit APP and the heart rate monitor; then, the computer will enter sleep mode.

**OPERATION**

1.POWER ON

Installs 2 pieces of 1.5V AAA batteries. (Whenever batteries are removed, all the functions values will be reset to zero.)

2.1 WAKE UP

After entering speed signal, each function will skip to display. STOP will be displayed once no speed signal detected for 10 seconds.

2.2 SLEEP MODE

The computer will shut off automatically and disconnect the heart rate monitor if there is no activity for 4 minutes when Bluetooth is not connected.

3.SCAN

After power on or press the mode button, automatically scan through each function value in sequence every 6 seconds. SCAN-->TIME-->SPD-- > DIST-- >CAL-->ODO--> RPM-->PULSE--> SCAN

4.TIME

Accumulates total training time from 00:00 up to 999:59.

5.SPD

Display current training speed from 0.00 up to 9999.9 M/H

6.CAL

Accumulates calories consumption during training from 0.0 up to 9999.9 kcal

Note: This data is a rough guide for comparison of different exercise sessions which can not be used in medical treatment.

7.ODO

Track the total distance traveled since battery installation from 0.00 up to 9999.9 Mile.

8.DIST

Displays the current movement distance of the user, with the display range of 0.00 to 9999.9 Mile.

9. RPM

Revolution(s) Per Minute

10. PULSE

Display the user's heart rate from 30-240 upon pulse signal detected with pulse symbol flashing. The pulse graphic will not flashing upon no pulse signal detected. and when there is no heart rate, “P” is displayed.

NOTE:

1. If the computer displays abnormally, please re-install the battery and try again.
2. Battery Spec: 1.5V or AAA (2PCS).
3. The batteries must be removed from the appliance before it is scrapped and that they are disposed of safely.
4. Press the button on the back side of the computer to switch between metric and imperial mode.(see the following figure)

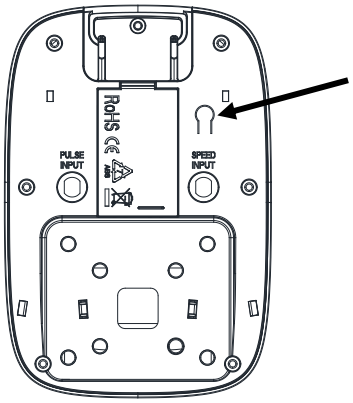


Press here to switch between metric and imperial mode.

# Maintenance Instructions

This is general information for daily, weekly and monthly maintenance to be performed on your bike.

**DAILY MAINTENANCE**

After each exercise session, wipe down all the equipment: seat, frame, and handlebars. Pay special attention to the seat post, handlebar post and belt/chain guard. Sweat is very corrosive and may cause problems that require parts replacement later.

1. Get on the bike and engage the crank.
2. Pay attention to any vibrations felt through the pedals. If you feel any vibrations, you may need to tighten the pedals, bottom bracket, or adjust the drive belt/chain tension.
3. Use a wrench to tighten the pedals until they are secure.

**MONTHLY MAINTENANCE**

1. Check if all hardware is secure, such as: water bottle holder, flywheel nuts, belt/chain guard bolts, brake caliper lock nuts, and brake caliper tension rod nuts.
2. Inspect the brake tension rod for signs of wear such as missing threads. Clean and lubricate the brake tension rod.
3. Clean and lubricate the seat post, handlebar post and seat slider. Remove any buildup of foreign material.

**WEEKLY MAINTENANCE**

1. Inspect moving parts and tighten the hardware.
2. Inspect pull pin frame fittings to make sure the fittings are snug. Loose frame fittings may strip out threads over time and cause extensive damage.
3. Clean and lubricate pop pin assemblies. Pull on the pin and spray a small amount of lubricant onto the shaft.
4. Tighten the seat hardware to make sure the seat is level and centered.
5. Brush and treat the resistance pads. Remove any foreign material that may have collected on the pads. Spray the pads with silicone lubricant. This helps to reduce noise from friction between the pads and the flywheel.
6. Visually inspect the bottom bracket, toe clips and toe straps. If any of them are loose or disconnected, attach, and tighten.

**LEATHER BRAKE PAD CARE (If applicable)**

1. Perform this maintenance when the brake pad is first installed and for the life of the brake pad. Following these simple guidelines can increase the life of your brake pads.
2. Some brake pad assemblies are pre-lubricated. Squeeze the brake pad. If lubricant is released, then the pad has been pre-lubricated.
3. If the brake pad is dry, then coat the brake pad with 3-n-1 oil (not included with product). Brush the leather with a clean, wire bristle brush, and then apply the oil. The oil should be allowed to soak into the pad. Repeat 4-5 times until the pad is saturated, but not dripping with oil. When the pad is saturated, it will no longer absorb oil.
4. Inspect the brake pad weekly and lubricate if needed. The pad should not have a glazed appearance. If the pad appears glazed, then brush it with wire brush and apply lubricant as needed. If any of the sponge padding is showing through the leather pad, the brake pad should be replaced.

# Parts List

| No. | Description | Spec. | Qty. |
|---|---|---|---|
| 1 | Main Frame | | 1 |
| 2 | Seat Post | | 1 |
| 3 | Front Stabilizer | | 1 |
| 4 | Handlebar Post | | 1 |
| 5 | Handlebar | | 1 |
| 6 | Seat Slider | | 1 |
| 7 | Rear Stabilizer | | 1 |
| 8 | Magnet Plate | | 1 |
| 9 | Dumbbell Rack | | 1 |
| 10 | Magnetic Plate Connection Seat | | 1 |
| 11 | Flywheel | 10KG | 1 |
| 12 | Flywheel Axle | Φ12*158 | 1 |
| 13 | Spacer Sleeve | Φ18*Φ12.1 | 1 |
| 14 | Cone-axle Sleeve | Φ22*Φ12.2 | 2 |
| 15 | Flange Plate | Φ20*170 | 1 |
| 16 | Brake Pad | Φ10*220 | 1 |
| 17 | Square Nut | M10 | 1 |
| 18 | Tension Spring | Φ1.6*Φ12 | 1 |
| 19 | Pull Rod | Φ12.5*M8 | 2 |
| 20 | Strong Magnet | 25*20*5 | 5 |
| 21 | Left Crank | 206*36 | 1 |
| 22 | Right Crank | 206*36 | 1 |
| 23 | Left Pedal | 9/16 L | 1 |
| 24 | Right Pedal | 9/16 R | 1 |
| 25 | Left Nylon Nut | 9/16-20 | 1 |
| 26 | Right Nylon Nut | 9/16-20 | 1 |
| 27 | Bearing Limit Sleeve | Φ16*12.1 | 1 |
| 28 | Bottle Holder | | 1 |
| 29 | Bearing | 6201 | 1 |
| 30 | Bearing | 6001 | 1 |
| 31 | Bearing | 6004 | 2 |
| 32 | Wave Washer | Φ26*0.3 | 1 |
| 33 | Shaft Ring | D20*1.0 | 2 |
| 34 | Open End Wrench | S13-S17-S19 | 1 |
| 35 | Allen Wrench | S6 | 1 |
| 36 | Spanner | S13-S14-S15 | 1 |
| 37 | Screw | M8*20 | 4 |
| 38 | Screw | M8*16 | 4 |
| 39 | Washer | Φ16*1.5 | 12 |
| 40 | Spring Washer | D8 | 4 |
| 41 | Screw | M8*40 | 2 |
| 42 | Screw | Φ8*45*M6 | 1 |
| 43 | Nylon Nut | M8*H7.5 | 4 |
| 44 | Black Hex Nut | M8*H6.8 | 8 |
| 45 | Hex Nut | M10*H5.5 | 1 |
| 46 | Hex Nut | M8*H16 | 1 |
| 47 | Hex Nut | M8*H3.8 | 1 |
| 48 | Hex Nut | M12*H6 | 2 |
| 49 | Hex Nut | M12*H19.5 | 2 |
| 50 | Screw | ST4.2*19 | 6 |

| No. | Description | Spec. | Qty. |
|---|---|---|---|
| 51 | Flange Nut | M12*H8 | 2 |
| 52 | Bolt | M6*16 | 4 |
| 53 | Spring Washer | D6 | 4 |
| 54 | Nylon Nut | M6*H6 | 4 |
| 55 | Washer | Φ20*2.0 | 1 |
| 56 | Screw | M5*12 | 10 |
| 57 | Washer | Φ10*1.2 | 6 |
| 58 | Screw | M5*10 | 2 |
| 59 | Screw | ST4.2*16 | 16 |
| 60 | Screw | ST4.2*25 | 2 |
| 61 | Pan Head Screw | M5*10 | 4 |
| 62 | Nylon Nut | M5*H5.5 | 2 |
| 63 | Transportation Wheel | Φ50*Φ8.6*20.5 | 2 |
| 64 | Adjustment Knob | | 1 |
| 65 | Brake Inner Sleeve | 17.2*Φ11 | 1 |
| 66 | Wheel Shield | Φ364*16 | 2 |
| 67 | Cowhide Brake | 35*30*8 | 1 |
| 68 | End Cap | 80*40*1.5 | 4 |
| 69 | Tension Control Knob | M10*20 | 1 |
| 70 | Adjustment Knob | | 2 |
| 71 | Square End Cap | 40*20*2.0 | 2 |
| 72 | Foot Pad | M8*25 | 4 |
| 73 | Belt Pulley | Φ220*20 | 1 |
| 74 | Belt | 6PJ480 | 1 |
| 75 | Seat | 185*260*103 | 1 |
| 76 | Foam Grip | Φ25*430 | 2 |
| 77 | Axis Sleeve | 54*28*33 | 1 |
| 78 | Circular End Cap | Φ24.5*31.3*23 | 2 |
| 79 | Frame Liner | 170*80*40 | 2 |
| 80 | Outer Chain Cover | 637*280*57 | 1 |
| 81 | Inner Chain Cover | 407.6*274*10 | 1 |
| 82 | Front Cover | 177*67*27 | 1 |
| 83 | Decorative Cover | 180*117*48 | 1 |
| 84 | Magnet Plate Cover-L | | 1 |
| 85 | Magnet Plate Cover-R | | 1 |
| 86 | Handlebar Cover | 122*80*45 | 1 |
| 87 | Brake Cover | 57*39*39 | 1 |
| 88 | Wire Clamp Plug | Φ15.5*Φ12*Φ3 | 3 |
| 89 | Crank Cover | Φ28*7 | 2 |
| 90 | Computer | SF-L2306M | 1 |
| 90a | Computer Wire A | | 1 |
| 90b | Computer Wire B | | 1 |
| 91 | Sensor Wire | L=850 | 1 |
| 92 | Sensor Base | 20*15*9 | 1 |
| 93 | Pulse Wire | L=650 | 1 |
| 94 | Grip Piece | 87*32*25 | 2 |
| 95 | Circular Magnet | Φ15*7 | 1 |
| 96 | Screw | M6*10 | 1 |
| 97 | Screw | ST4.2*12 | 2 |
| | | | |

# Exploded Diagram

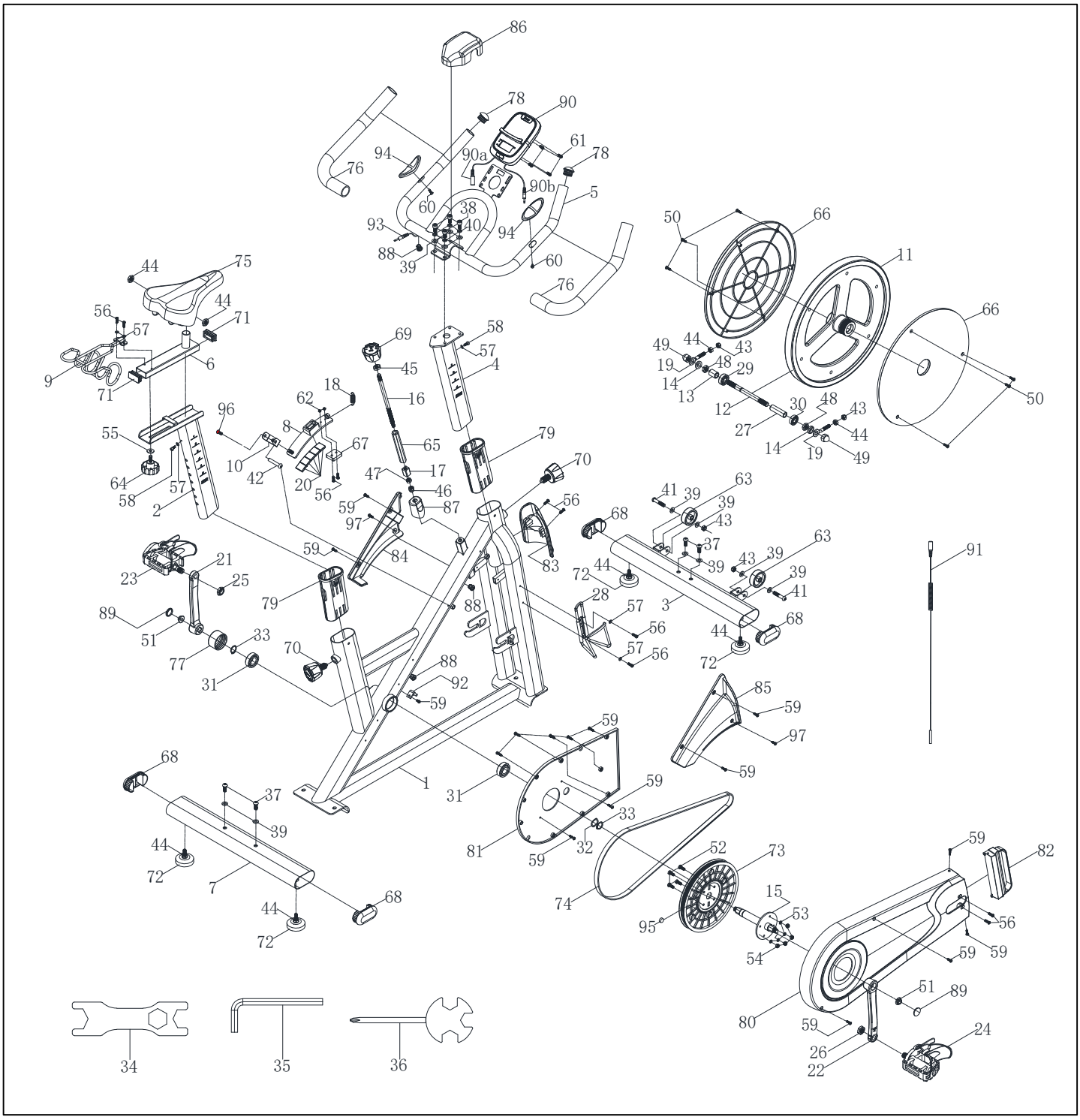


Version: 1.0

# Register

Register your product and verify warranty terms:
**jllfitness.co.uk/warranty**

# Download

Track your fitness progress & join **FREE** workout courses!
Download SunnyFit App today!

GET IT ON Google Play | Download on the App Store | GET IT ON Google TV | Download on the Apple TV

# Follow

Find us on social media

# Contact

Get in touch with us for any questions

+44 (0)800 6123 988
contact@jllfitness.co.uk