PIONEER®

# UVC Bacterial Disinfection
*for Ductless Mini-Split Systems*

# Owner's Manual

Model Number: IKT-UVL32UL-AG

DISINFECTION | SILENCE | SANITIZATION | CLEAN AIR | RECYCLE | SAFETY

## Specifications

- Input: AC 85-265V 50/60Hz
- Output: DC 12V 8W
- BF > 0.5, Tc < 176 ºF
- LED Input: 6.72W
- Current: 0.56A
- Voltage: 12V
- Intensity of UV irradiation: 345.1 μW/cm2

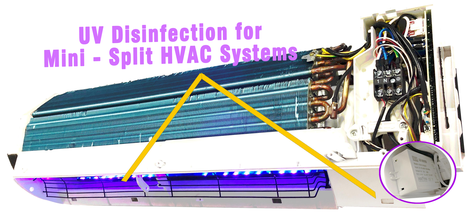

## Applicable for These Air System Types

☑ Wall-Mount

☑ Floor-Ceiling

☑ Cassette

# Operation Priciples & Technology

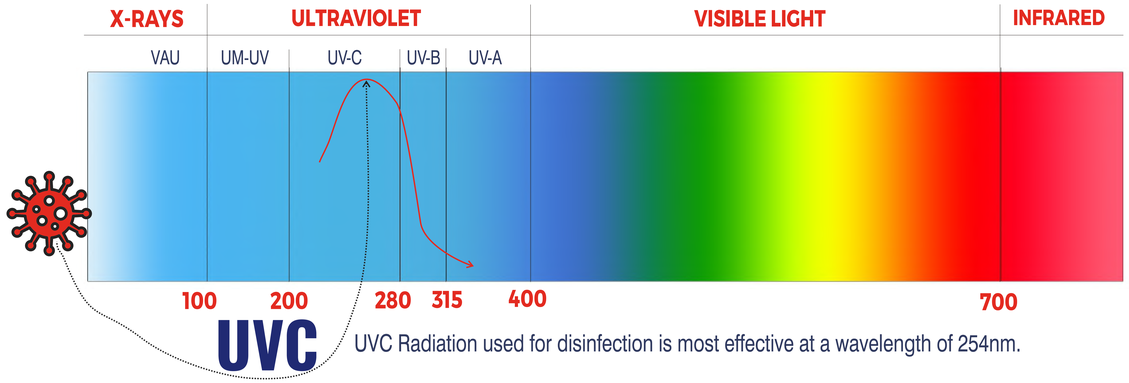


UVC Radiation used for disinfection is most effective at a wavelength of 254nm.

## Scientistic studies say:

The entire UV spectrum can kill or inactivate many microorganism species, preventing them from replicating. UVC energy at 253.7 nanometers provides the most germicidal effect. Combination of UVC + UVA is very effective in disinfection and also odors cleaning.

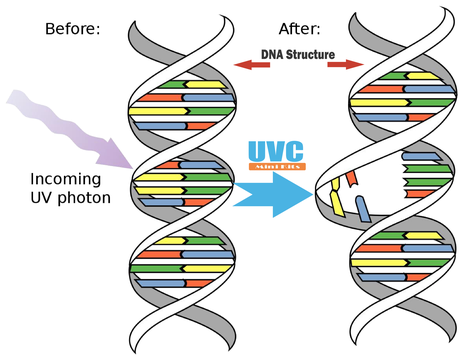


When exposing microorganisms to UVC light, the light penetrates through their cell wall and disrupts the structure of their DNA molecules, prohibiting reproduction.

OZONE
OZONE-FREE

# Also to know

**Prolonged exposure to direct LED UV Light may be harmful to eyes & skin**

UV

**Indirect exposure (blue glow) is not harmful**

# The kits of UVC Mini

Improves Indoor Air Quality and fights biological contamination inside mini splits.

- A UV LED Driver
- B RF Receiver (Optional)
- C RF Emitter (Optional)
- D LED UVC Strip
- E Screw
- F Ring Connector (Optional)
- G Adhesive Wire Base
- H Alcohol Wipe
- I Mounting Pads
- J Warning Sticker
- K Wired Switch (Optional)
- L UV Shield Strip
- M Manual

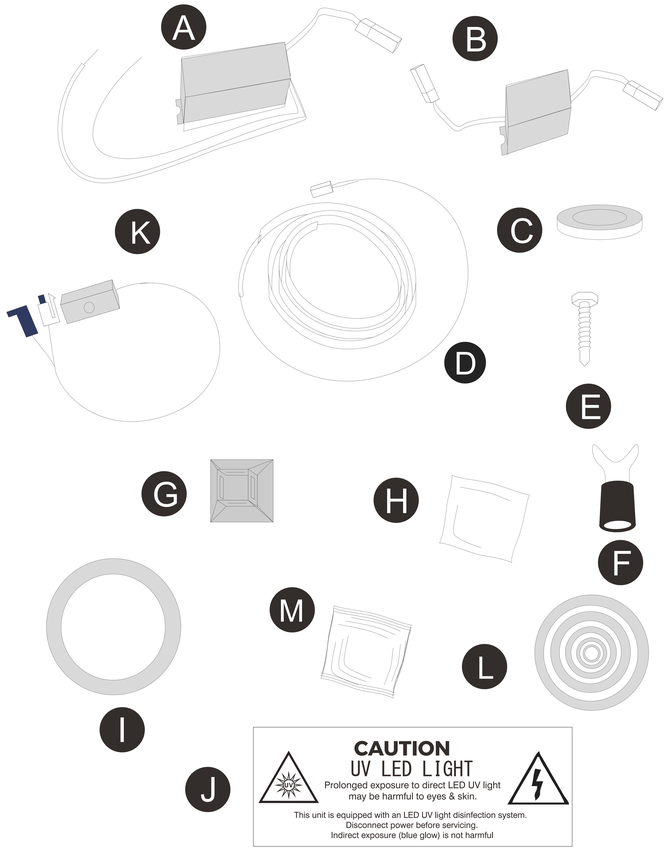


**IMPORTANT !**

- **Only Qualified technicians should install this product**
- **Install only in accordance with the relevant building code**
- **Read instructions carefully including those safety warnings**

# Introduction of the UVC Mini Kits

UVC MINi KITS is one of the innovated applications of the UV disinfection in Mini Split and other space limited systems.

It is normally used to disinfect an air conditioning system,  by stopping bio-growth on fan, coils and other surfaces, and related bad odors. It helps dramatically to maintain a clean, fresh air conditioner system, improves the indoor air quality, extends life span and reduce maintenance cost.

Because space is tight and sufficient exposure of the surfaces is required, the UVC MINI KITS is best to be installed inside the supply vent with the light shing onto the blower wheel(which is prone to be the worst mold growth).

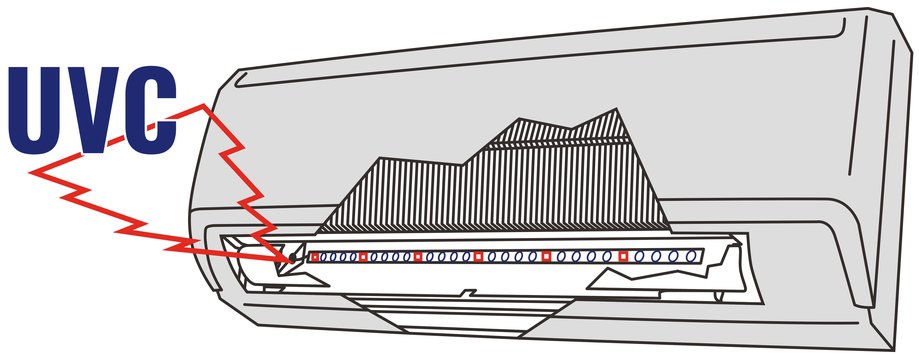


**Cutaway View of Typical Installation UVC MINi KITS in Mini Split**

**CAUTION UV LED LIGHT**

Prolonged exposure to direct LED UV light may be harmful to eyes & skin.

**Disconnect power before servicing. Indirect exposure (blue glow) is not harmful.**

IMPORTANT!

Install LED strip so that the light shines into the air system, not into the room.

# Air System Preparation before installation

**1. Remove the cabinet cover**

- Disconnect Power Supply
- Detach filter
- Dismantle the LED display assy
- Open the control box cover

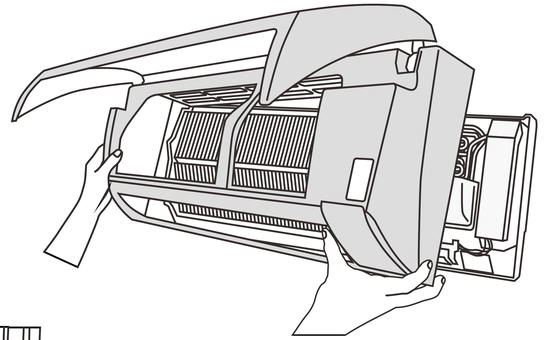

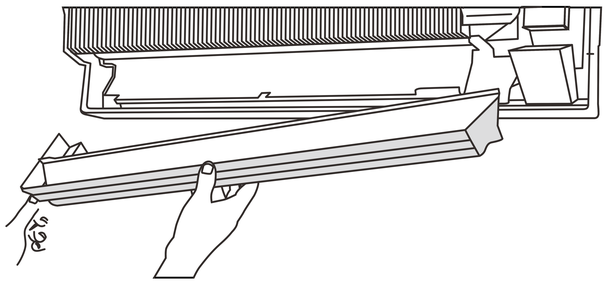

**2a. Detach drain pan to access the area behind it.**

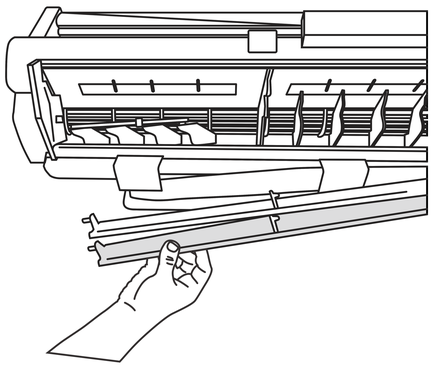

**2b. For systems with non-removable drain pan, remove the louvers and grills to access.**

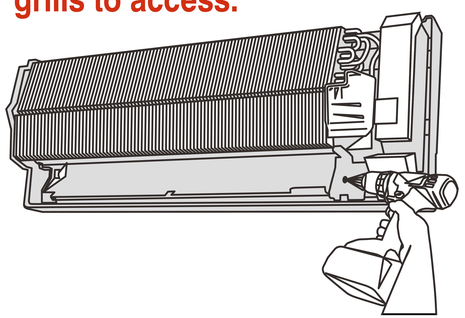

**3. Unless required, drill a 2/3 hole to pass connector cable to the back. (By the side of the control box)**

IMPORTANT!

Disconnect the power supply before you do anything on the installation!

# Mounting the UVC LED Strip

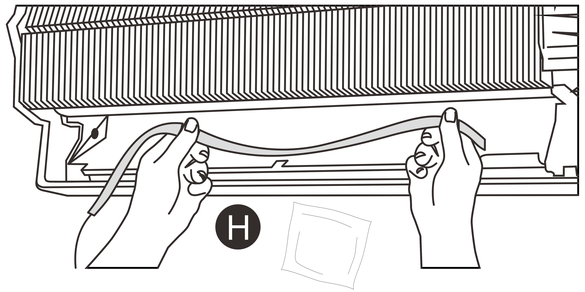


**1. Determine best location**

- Clean with cloth for dust/dirty
- Clean out with alcohol wipe

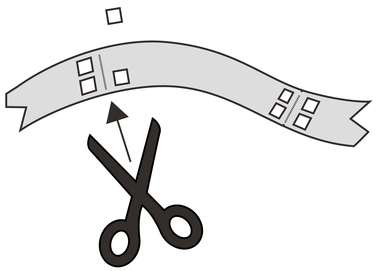

**2. If needed, cut the strip into the length that best fits into the space. (Cut-to-length instruction is provided in this manual)**

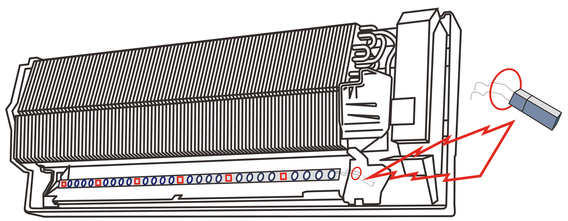

**3.Pass the connector cable through the drilled hole**

**3.Peel off paper from the adhesive backing on the LED strip. A few at a time and press it down firmly onto the clean surfaces.**

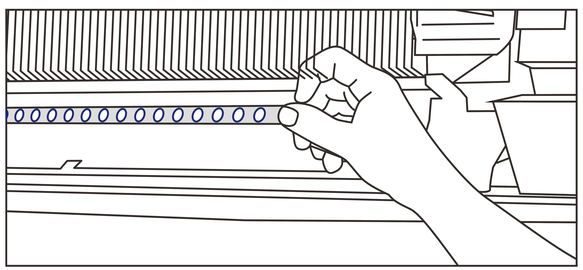

**IMPORTANT !**

- **Place the LED strip so the light will shine on the blower wheel**
- **Cut the strip only following the instruction by manufacturer**
- **UV Light NOT INTO THE ROOM**

# Install the light Shield Strip

UVC light shield strip is innovated by manufacturer and recommended to be installed with the UV LED strip. It is adhesive with special material, to shield these lights which may be exposed INTO THE ROOM.

**To Install, simply peel off the paper from the adhesive side and stick firmly to the UV LED strip, with an angle of 90°degree, upstraight.**

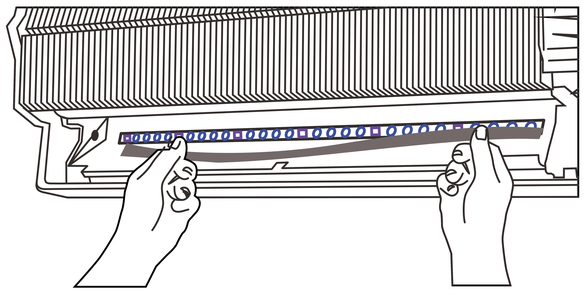

# Electric Installation Preparation

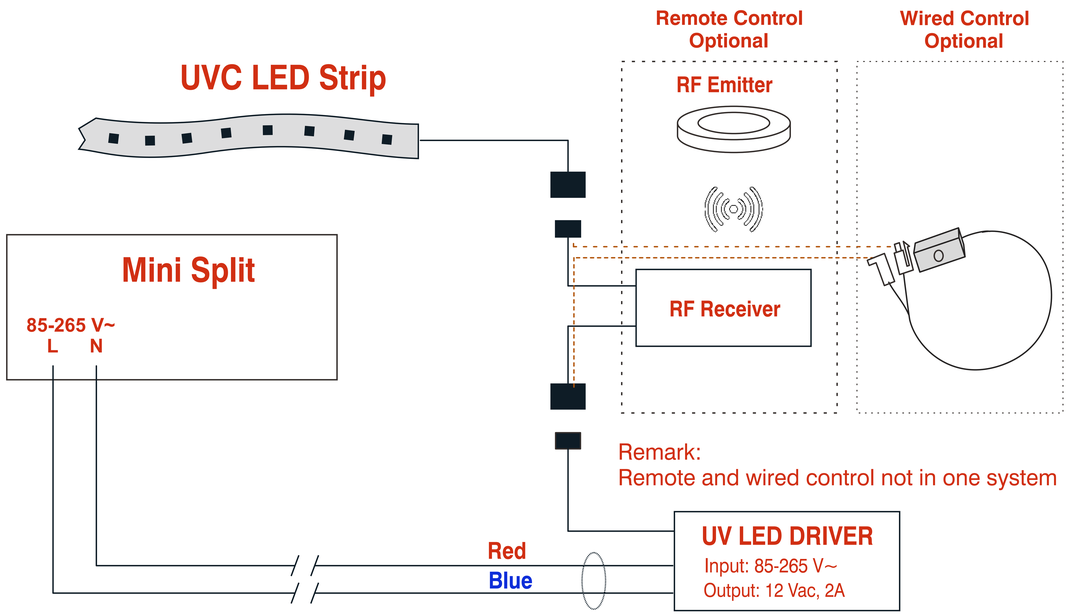

# Electrical Installation

1. Remove the control box cover and connect the UV LED Driver power cable with the following:

**UV LED DRIVER**
Blue Wire: “L”
Red Wire: “N”

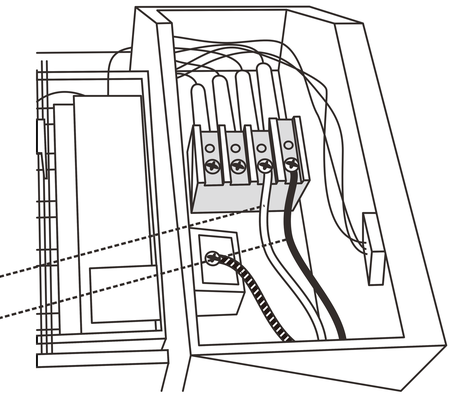

**Notice:** UVC MINI KITS comes with a wide voltage 85-265Vac power supply.

2a. Connect the UV LED DRIVER cable connector to the strip directly, only if the model is equipped with neither wired nor remote control.

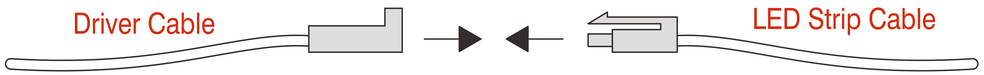


2b. If equipped with a wired control, connect the UV LED DRIVER cable to one end of the wired control, and the other end to the UV LED Strip.

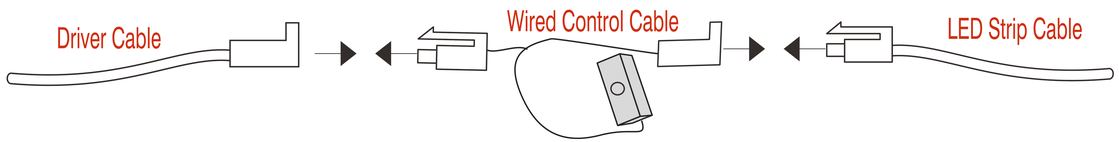


2c. If equipped with a wired control, connect the UV LED DRIVER cable to one end of the wired control, and the other end to the UV LED Strip.

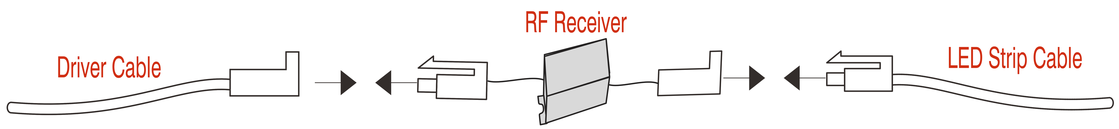


# Electrical Installation

3. Tuck the power cable into the line chase on the back of the unit or place it under the control box or other location secure.

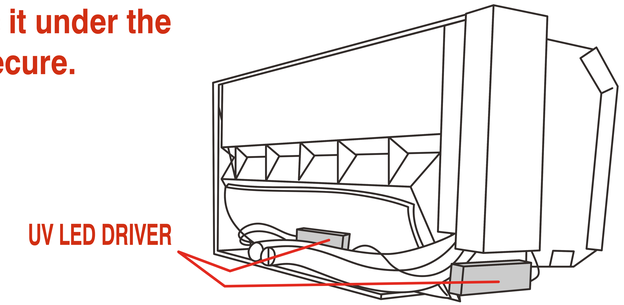


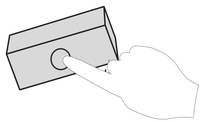

a. Press once to turn on/off

b. Long Press to week/Strong

Or

Press once to turn on/off

4. Turn on the power supply and confirm if the UVC MINI KITS is working.

5. Apply the UV Warning Sticker in a proper location.

**CAUTION**
UV LED LIGHT
**Prolonged exposure to direct LED UV light may be harmful to eyes & skin.**

This unit is equipped with an LED UV light disinfection system.
Disconnect power before servicing.
Indirect exposure (blue glow) is not harmful

# Cut-to-length Instruction

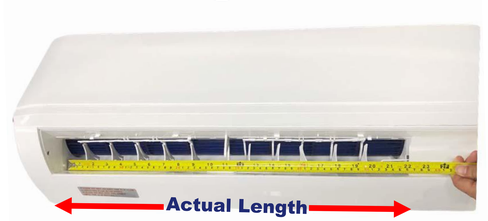


Actual Length = air outlet vent length which determine the required actual L.

## Concepts to know

One UV modular cycle is 10cm, which includes UVC(1)+UVA(4)

## Locate the best cutting point

**First Cut Point** (Most Recommended)

**End with bushing**

1. Determine how long you need to cut. 10 cm is a LED Modular Cycle.

2. Cut from the end without the cable! Take off the bushing and prepare to cut.

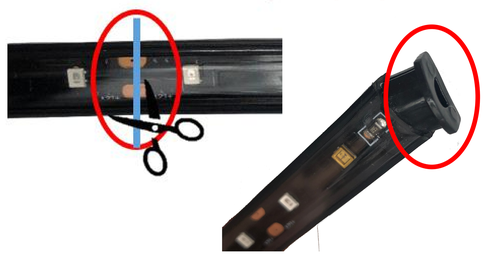

3. Cut from the first cut point (two copper fin) if >=10cm.If < 10cm, cut at the second point.

4. Seal the end with the bushing, tightly, make sure not to wrinkle the inner LED strip circuit.

**IMPORTANT !**

**Factory Pre-Cut Services are available at any length as per requested.**

# UVC *Bacterial Disinfection* *for Ductless Mini-Split Systems*

EASY INSTALLATION

## Prevents bio-growth & related odors on fan, coil and other interior surfaces!

## Benefits

- Prevent mold and bacteria growth
- Ensure a clean mini-split system
- Extend life of a mini split system
- Improve indoor air quality
- Reduce maintenance cost

## Kits Include:

- LED Strip (UVA/UVC)
- LED Driver
- Strip Cabinet
- Bushing Block
- Adhesive Sticker
- Hardware
- User Manual
- Cleaning Cloth

## Features

- Super compact / High intensity
- Easy fit with simple installation
- 85-265 VAC wide range power supply
- Cut-to-length LED strip design
- Water resistance / Heat dissipation
- 50,000 hours+ expected LED life
- Three years system warranty
- Designed to fit major brands
- For Wall-Mount, Floor-Ceiling & Cassette

**Parker Davis HVAC International, Inc.**
3250 NW 107th Avenue
Doral, FL 33172
https://www.pdhvac.com

**Phone:** (305) 513-4488
**Toll Free:** (800) 675-7410