Parts:

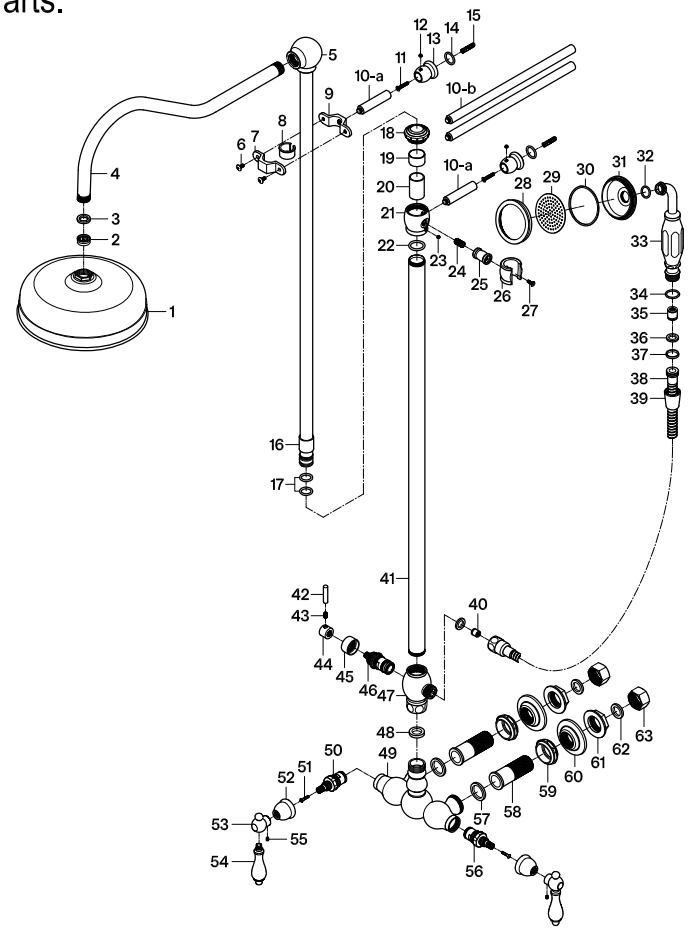

Replacement Parts:

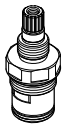

Hot Cartridge:
KSRPT1000HC

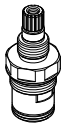

Cold Cartridge:
KSRPT1000CC



Diverter Cartridge:
KSRP617C

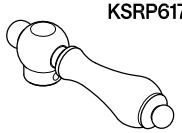

Handle: CCML1

CARE AND MAINTENANCE OF YOUR FAUCET

Your KINGSTON faucet has been finished to the most strict standards; however, due to the high content of minerals in the water, your finish may appear dull and tarnished after time. These are some do's and don'ts to maintain the luster on your faucet for many years to come.

DO
1. Use a silicon based caulking when installing.
2. Clean your faucet with only a mild soap and water solution.
3. Dry your faucet after using it.
4. Give it a coat of Carnauba Wax periodically.

DON'T
1. Use plumbers putty when installing the faucet.
2. Use any abrasive cleaning agents.

It may seem like a very simple and short list but it is that simple to maintain your faucet, looking shiny and new.

If your faucet is already looking somewhat dull and tarnished, before replacing it, try cleaning it with a 50/50 solution of vinegar and water, you may need to soak some rags and wrap around those stubborn areas, leave
overnight and rinse completely in the morning, apply Carnauba wax once you have removed the mineral deposits.

KINGSTON

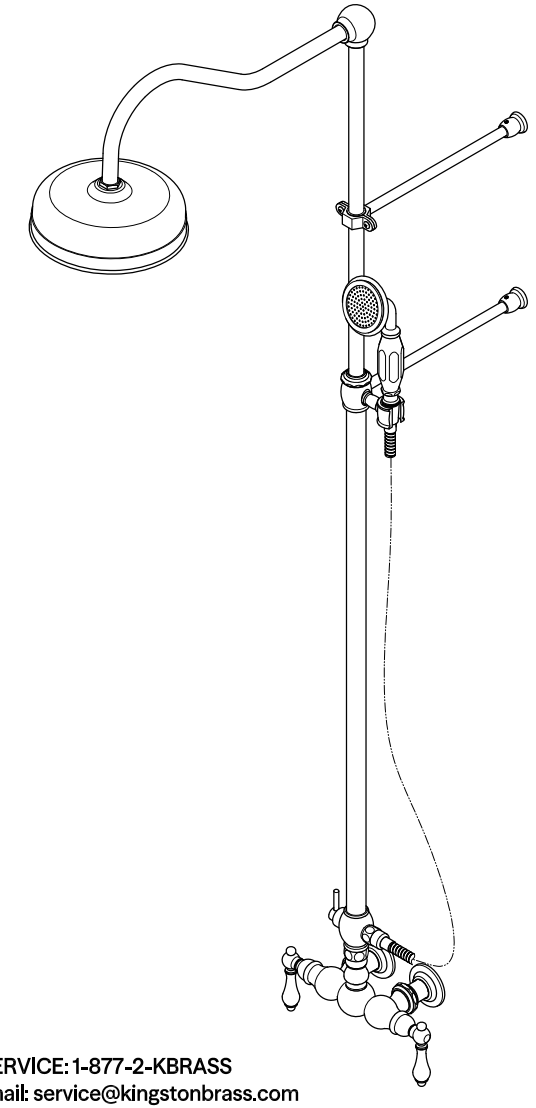

www.kingstonbrass.com

TOLL-FREE CUSTOMER SERVICE: 1-877-2-KBRASS
TECHNICAL SUPPORT E-mail: service@kingstonbrass.com
12775 Reservoir Street, Chino, CA 91710

NOTICE

Failure to follow all directions may cause leaks which may result in water damage

⚠CAUTION

Failure to follow all installation directions may cause product to detach from the wall and cause serious injury

KINGSTON

INSTALLATION INSTRUCTIONS
Wall Mount Shower Combination

BEFORE BEGINNING INSTALLATION:

1. Flush plumbing lines to clear any debris.
2. Shut off both supply lines after flushing.

1

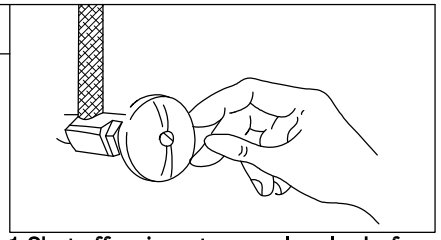

1. Shut off main water supply valve before installation.

3

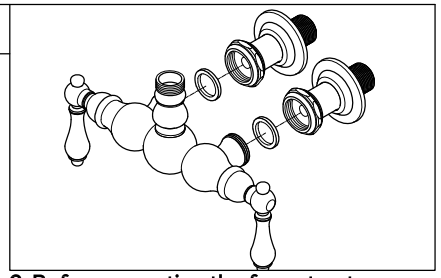

3. Before mounting the faucet onto supply elbows, apply small black washers onto both water inlets of faucet.

5

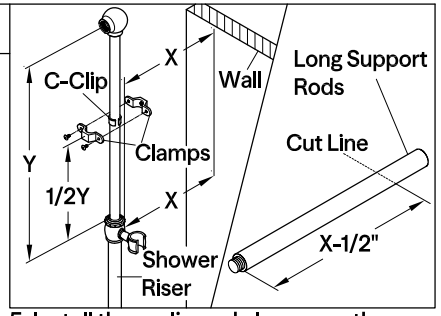

5. Install the c-clip and clamps on the upper tube at the "1/2Y" location. Adjust and keep the shower riser in a plumb direction, then measure the wall installation space "X" for deciding to use short or long support rod. If cutting long support rod is needed, you should cut it to fit as long as "X"-1/2 inch.

3. The product features two pairs of short and long support rods for option. The long rods can be trimmed off to size for installing space over 2-5/8" between shower riser and wall.

2

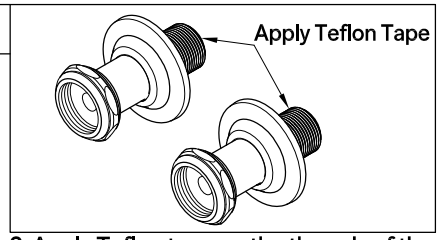

2. Apply Teflon tape on the threads of the copper shank. Install the elbow.

4

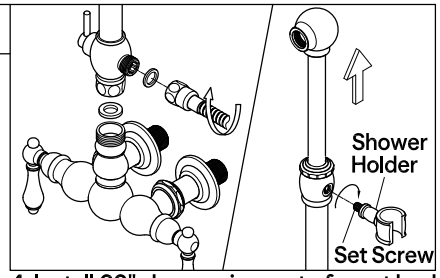

4. Install 60" shower riser onto faucet body. Remove the shower holder and the set screw inside. Pull up the upper tube from the riser body and adjust the upper tube to its appropriate height. Install the shower holder and set screw back onto the riser body. Make sure the set screw not over tightened, otherwise it will push aside the upper tube and cause water leakage.

6

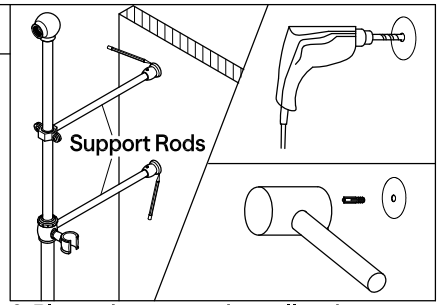

6. Place a base onto the wall and trace around it with a pencil. Drill holes at the marked locations and insert anchors into the holes with a hammer until flush with the wall.

Need Tools:



7

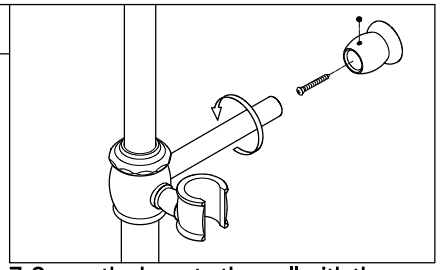

7. Screw the base to the wall with the mounting screws. Place the unit, with the small hole in the base underneath, over the mounting plate by tightening the screw with screwdriver until the base is tightly fixed.

8

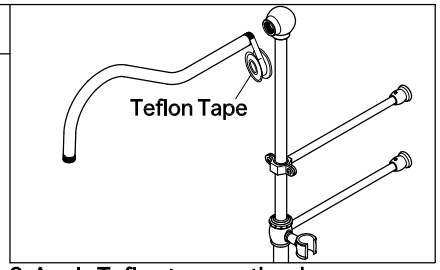

8. Apply Teflon tape on the shower arm threads then secure one end to the add on shower.

9

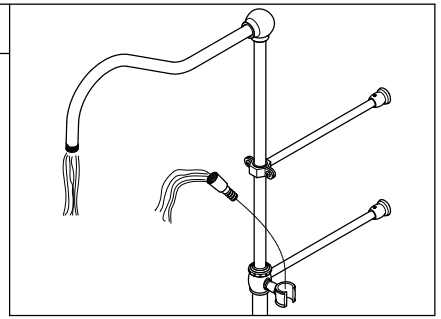

9. Turn on the faucet and let hot and cold water to run for at least one minutes to clean any debris inside the water line.

10

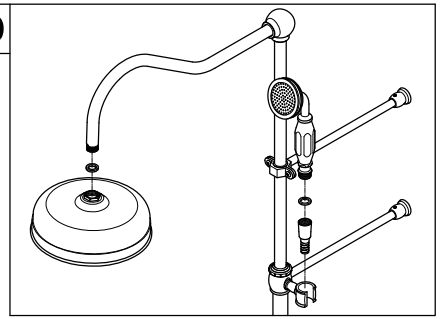

10. Tighten showerhead to shower arm and hand shower to the hose.

Warning!!!

- DO NOT STEP ON faucet or supply line installation. This fixture is not a stair to access your storage, window or access higher ceiling. This Cast Brass Faucet cannot support your body weight. To step on faucet will crack the fitting and eventual fracture to cause water damage to your property.
- The faucet was tested and meets ASME/ANSI code on its operation, loading and torque pressure. However this faucet is not designed to support weight over 250 pound per square inch of pressure, DO NOT OVERTIGHTEN.
  DO NOT APPLY ELECTRICAL TOOL to fasten faucet installation.
- For Exposed tub supply line installation faucet model, your supply lines have to be installed on corner area, or at area with no walking traffic access to cause accidental tamper or accidental breakage. For installation of exposed supply line at open traffic area is prohibited.
- Removal of this tag prior to installation will void your warranty. Pass the WARNING TAG to the owner after installation.

©2025 LVC Kingston LLC. All Rights Reserved.
2025-05-D