PRORUN

INSTALLING THE TRIMMER HEAD

1. Remove the Nut and Retainer from the Threaded Gear Shaft.
   See Figure 7

NOTE **Save the Retainer and Nut. They are required for the mounting of a brushcutter blade (not included).**

Fig 7

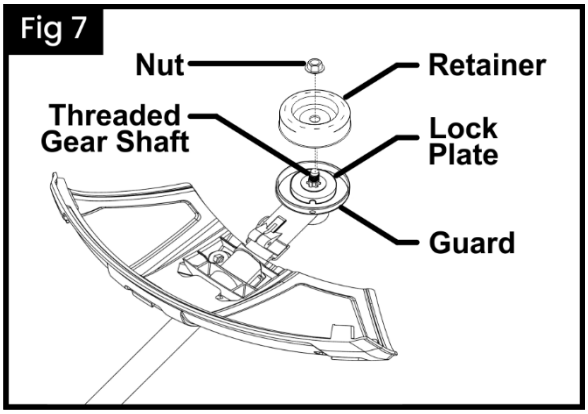

2. Fit the Lock Plate on the Threaded Gear Shaft.
3. Rotate the Lock Plate and Threaded Gear Shaft until the hole on the Lock Plate aligns with the corresponding hole on the Guard.
4. Insert a locking pin or small screwdriver through the two holes to lock the Threated Gear Shaft from rotating.
5. Screw on and tighten securely the Trimmer Head in a counterclockwise rotation. See Figure 8
6. Remove the locking pin or small screwdriver.

Fig 8

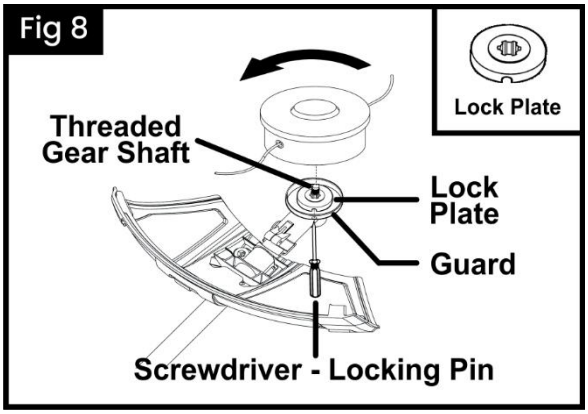

NOTE **To disassemble the Trimmer Head, follow the preceding instructions in reverse order.**

INSTALLING THE BUSHCUTTER BLADE (NOT INCLUDED)

NOTE **The PSST217 Attachment can be equipped with a approved brushcutter blade (not included). Contact PRORUN Customer Service for additional details.**

NOTE **If required, remove the Trimmer Head by following the preceding instructions in reverse order.**

1. Fit the Lock Plate on the Threaded Gear Shaft.
2. Rotate the Lock Plate and Threaded Gear Shaft until the hole on the Lock Plate aligns with the corresponding hole on the Guard.
3. Insert a locking pin or small screwdriver through the two holes to lock the Threated Gear Shaft from rotating. See Figure 8
4. Place the Brushcuttter Blade onto the Lock Plate and center. See Figure 9

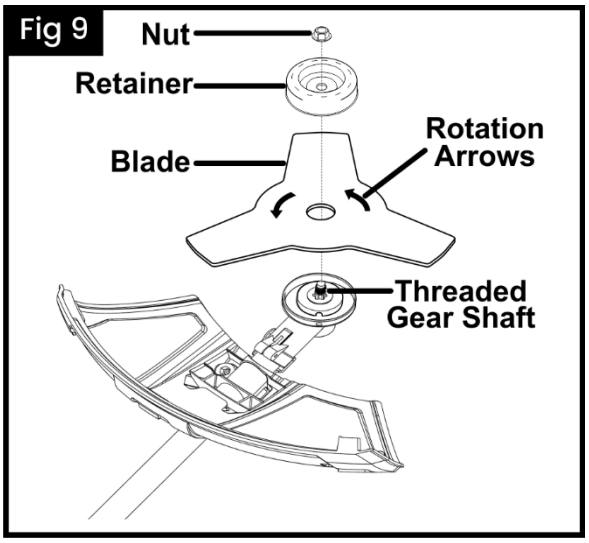

⚠ CAUTION! Only place the Brushcutter Blade with the Rotation Arrows facing up and pointing in the direction of the Threaded Gear Shaft's rotation (counterclockwise).

5. Place the Retainer and Nut onto the Threaded Gear Shaft and tighten securely. Nut attached with a counterclockwise rotation.
6. Remove the locking pin or small screwdriver.

⚠ CAUTION! Always remove the Guard Extension when using a Brushcutter Blade.

7. Remove the retaining screw and Guard Extension from the Guard before using a Brushcutter Blade. See Figure 10

