AIBuds
AI智能头戴式摄像蓝牙耳机
快速入门指南

AIBuds AI Smart Camera Wireless Headphone
Quick Start Guide

01、外观说明

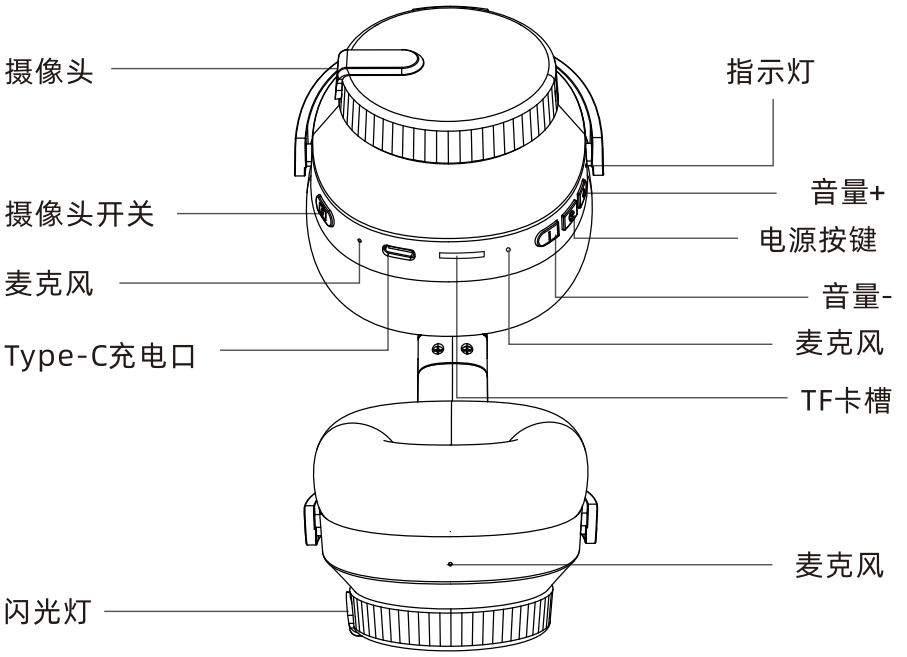

02、产品参数

主控芯片	IMX219
内存	8GB
摄像头	800万 拍照3264*2448 视频1600*1200
扬声器	双扬声器
电池及续航	800mAh 日常随身佩戴使用约40H 超长待机220H
充电	TYPE-C接口 充电约4H充满
连接方式	WiFi6 BT5.4
交互方式	语音 按键*4

03、按键说明

开关机键	单击	播放/暂停（打开播放器状态）
	单击	接听/挂断（来电/接听状态）
	双击	拒接/回拨尾号（开机状态下）
	三击	唤醒手机语音助手（开机状态下）
	长按3秒	关机，橙灯闪烁2次（开机状态下）
	长按5秒	开机，绿灯闪烁2次（关机状态下）
+号键	单击	音量加
	长按2秒	下一曲（打开播放器状态）
-号键	单击	音量减
	长按2秒	上一曲（打开播放器状态）
摄像键	单击	图片拍摄/结束视频录制/结束录音
	双击	视频录制
	三击	录音
	长按2秒	唤醒AI语音助手
开关机键+摄像键	长按6秒	恢复出厂状态

04、指示灯说明

橙灯闪烁2次	关机
橙灯闪烁2次	恢复出厂
橙灯快闪	低电量
橙灯快闪	充电中
绿灯闪烁2次	开机
橙灯和绿灯交替慢闪	未连接
绿灯常亮	充满电/固件升级中
白灯闪烁1次	拍照
白灯亮 5 秒，暗 5 秒	录像

05、下载与连接

① 下载并安装“AIBuds” APP

扫描二维码，下载"AIBuds"APP，或前往各大应用市场搜索"AIBuds"下载安装；

② 连接耳机

打开手机蓝牙并保持待连接状态（手机定位需保持打开）；长按开关机键5秒，听到“Power On”提示音后松开按键，表示耳机已开机；
打开“AIBuds”APP，注册账号登录，并授予必要的运行权限；点击右上角“+”号按钮，点击“添加设备”，选择智能耳机，找到您的耳机设备，点击连接即可；

③ 开启AI联网

IOS系统：前往手机设置，开启手机热点；打开「允许其他人加入」、「最大兼容性」选项；
Android系统：前往手机设置，打开通过蓝牙共享网络选项；

④ 插入存储卡（TF卡）

本产品机身无内置存储，但已随附一张TF卡并预装于卡槽中，开机即可使用，用户无需自行插卡。
若需更换为自备TF卡，建议先将自备TF卡用电脑格式化后再使用。

06、常用AI语音指令

序号	场景	语音指令
1	唤醒词	小拓小拓
2	语音开启拍照功能	拍张照片
3	语音开启录像功能	打开录像
4	语音开启录音功能	打开录音
5	语音开启接听电话功能	接听电话
6	语音开启挂断电话功能	我正在忙
7	音量+	声音大一点
8	音量-	声音小一点

07、功能操作

1.高清拍摄

单击摄像键，听到提示音“咔嚓”表示完成拍摄，拍摄完成后，可在“AIBuds”APP同步导入照片查看并分享
注：为保持拍摄清晰度，请您在拍摄时尽量保持设备稳定；

2. 高清录像

双击摄像键，听到提示音“滴”表示开始拍摄；
再次单击摄像键，听到提示音“嘟”表示结束拍摄；
拍摄完成后，可在“AIBuds”APP同步导入照片查看并分享

注：为保持拍摄清晰度，请您在拍摄时尽量保持设备稳定；

3. 录音

三击摄像键，听到提示音“滴”表示开始录音；
再次单击摄像键，听到提示音“嘟”表示结束录音；
录音完成后，可在“AIBuds”APP同步导入音频文件查看并分享

注：本产品支持拍照，录像和录音，但使用时功耗相对较高。在电量低于20%的时候，设备将停用拍照，录像和录音功能。

4. Ai语音助手

①长按摄像键，唤醒AI语音助手；或者语音喊出“小拓小拓”，唤醒AI语音助手；
②发起提问，AI语音助手分析并回答问题

5. Ai记忆管家

①长按摄像键，唤醒AI语音助手；或者语音喊出“小拓小拓”，唤醒AI语音助手；
②发起指令（例：记一下我的文件在抽屉的第二层/记一下我的车停在B3-001）；或发起询问（例：我的会议文件在哪/我的车停在哪）

6. Ai智能识图

①长按摄像键，唤醒AI语音助手；或者语音喊出“小拓小拓”，唤醒AI语音助手；
②发起提问（例：我前面有什么东西），听到提示音“咔嚓”表示完成拍摄，AI语音助手分析并回答问题；
注：为保持拍摄清晰度，请您在拍摄时尽量保持设备稳定

7. AI录音

①打开“AIBuds”APP，点击AI录音，点击开始即可；
②点击结束录音后，在AI录音记录功能内进行转写与总结

8. AI翻译

文本翻译
打开“AIBuds”APP，点击AI翻译，选择文本/语音翻译，长按语音录入图标，即可录入声音，完成后松开即可，或输入文字翻译；
对话翻译
打开“AIBuds”APP，点击AI翻译，选择对话翻译，点击开始录音即可翻译结果；
同声翻译
打开“AIBuds”APP，点击AI翻译，选择同声翻译，选择我的语言和对方语言，开启同传说话即可将语音翻译成目标语言

9. 音乐播放

连接手机蓝牙后，可播放手机音乐，单击开关机按键播放/暂停音乐；（播放器打开状态）

10. 电话接听

连接手机后，来电状态下，自动播报来电铃声提示；
单击开关机键接听电话，再次单击开关机键结束通话；
双击开关机键拒接电话；

08、注意事项

●请避免在高温、潮湿或强磁场环境中使用本产品，否则可能会干扰耳机的电子元件，影响其正常运行，损坏耳机的电池和内部零部件，使用和存放时应避开此类环境；

●本产品属于精密电子设备，不可受到强力撞击、挤压或掉落，否则可能损坏内部零部件，影响正常使用，因此请妥善保管耳机，避免与硬物强力磕碰；

●不使用耳机时，应将其放置在干燥、通风的地方，避免阳光直射，可使用收纳袋或保护套进行收纳，防止耳机受到碰撞、挤压或刮擦，减少损坏风险；

●请使用正规厂家生产经过国家CCC认证的充电器为耳机充电，避免使用劣质充电器，防止因充电不当引发安全问题，如过热、起火等；避免过度充电和过度放电，当电池电量低于20%时应及时充电，充满后应及时拔掉充电器；每隔一段时间对电池进行一次充放电，以保持电池性能；

●请勿在潮湿有水的环境下充电，同时请确保耳机充电区域与充电器表面洁净且完全接触；

●使用过程中请保持摄像头清洁，使用干净、柔软的布轻轻擦拭，请勿使用化学溶剂或粗糙的材料擦拭本产品；

●定期检查并更新AI耳机固件，以获取新功能、提升性能及修复漏洞；在更新过程中，确保电量充足（60%以上）且网络稳定，避免更新中断导致设备故障；

●部分功能在对应的软件版本中可能有调整变动，为正常情况；

●本公司保留必要情况下，对本说明书内容进行修改的权利，恕不另行通知；

*本产品支持照相，录像功能，严禁使用本产品进行偷拍等行为，请严格遵循当地法律法规，合规使用本产品。

09、常见故障及解决方案

常见故障	解决方案
无法开机	检查电量并充电
无法充电	检查充电线是否正常
无法连接手机	查看耳机是否开机并处于待连接状态
音乐及播报无声音	检查音量是否正常
照片/视频导入慢或失败	检查网络是否正常

感谢你选择我们的产品
我们将竭诚为你服务

Thank you for choosing our product.We are here to serve you wholeheartedly.

01. Appearance Description

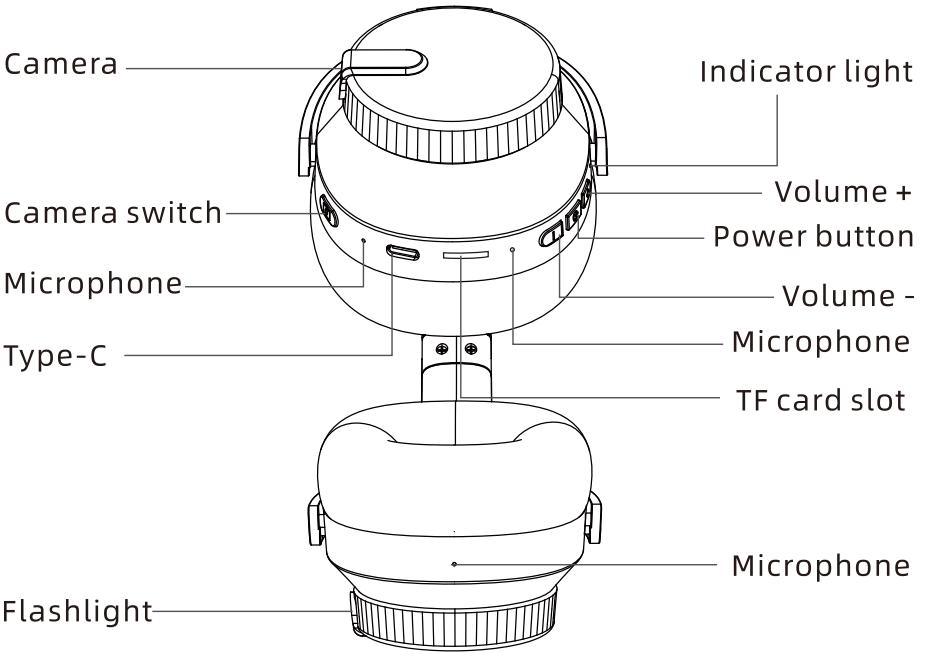

02. Product Parameters

Main Control Chip	IMX219
Memory	8GB
Camera	8MP Photo Resolution 3264*2448 Video Resolution 1600*1200
Speaker	Dual Speakers
Battery & Battery Life	800mAh Approx 40H of daily usage Ultra-long standby time of 220H
Charging	Type-C Charging Port Charging Time: 4H
Connection Method	WiFi 6 BT 5.4
Interaction Method	Voice 4 Buttons

03. Button Description

Power Button	Single Click	Play/Pause Music (Player on)
	Single Click	Answer Call/End Call (Incoming Call / On Call)
	Double Click	Reject Call/Redial Last Number (Powered on)
	Triple Click	Wake up Mobile Phone Voice Assistant (Powered on)
	Long Press for 3 seconds	Power Off (Blinks Orange 2 Times, Powered on)
	Long Press for 5 seconds	Power On (Blinks Green 2 Times, Powered off)
+ Plus Button	Single Click	Volume +
	Long Press for 2 seconds	Skip to Next Track (Player on)
- Minus Button	Single Click	Volume -
	Long Press for 2 seconds	Skip to Previous Track (Player on)
Record button	Single Click	Take Photo/Stop Video Recording/Stop Audio Recording
	Double Click	Start Video Recording
	Triple Click	Start Audio Recording
	Long Press for 2 seconds	Wake up AI Voice Assistant
Power Button + Record button	Long Press for 6 seconds	Restore Factory Settings

04. Indicator Light Description

Orange blinks twice	Power Off
Orange blinks twice	Restore Factory Settings
Orange blinks fast	Low Battery
Orange blinks fast	Charging
Green blinks twice	Power On
Orange & green blink slowly alternately	Unconnected
Green solid	Fully Charged/Firmware Upgrading
White blinks once	Taking Photo
White: 5s on, 5s off (repeats)	Video Recording

05. Download & Connection

① Download and Install the "AIBuds" APP

Scan the QR code to download the "AIBuds" APP, or search for "AIBuds" on major app stores to download and install it.

② Connect the AI Smart Headphone

Turn on mobile phone Bluetooth and keep it in a connectable state (Location service must be enabled).
Long press the power button for 5 seconds, and release the button after hearing the power-on prompt tone (indicating the headphone is powered on).
Open the "AIBuds" APP, register an account and log in, then grant necessary operating permissions.
Click the "+" button in the upper right corner, select "Add Device", choose “Smart Headphone”, find your headphone device, and click to connect.

③ Enable AI Network Connection

iOS System: Open Settings on your device and enable Personal Hotspot. Then turn on “Allow Others to Join” and “Maximize Compatibility”.
Android System: Go to mobile phone settings, enable the option to share network via Bluetooth.

④ Insert the TF Card

This device has no builtin storage. A TF card is included and preinstalled in the card slot - ready to use out of the box.
To use your own TF card, please format it on a computer beforehand.

06. Common AI Voice Commands

Serial No.	Scenarios	Voice Command
1	Wake AI	Hey Turbo
2	Voice-activated Photo Shooting	Take a picture
3	Voice-activated Video Recording	Take a video
4	Voice-activated Audio Recording	Take a record
5	Voice-activated Call Answering	Take the call
6	Voice-activated Call Hanging Up	I’m busy now
7	Volume+	Increase the volume
8	Volume-	Reduce the volume

07. Function Operations

1. HD Photo Capture

Single click the record button; heard the prompt tone "click" indicating the completion of shooting.
After shooting, you can sync and import photos to the "AIBuds" APP to view and share.
Note: To maintain shooting clarity, please keep the device as stable as possible during shooting.

2.HD Video Recording

Double-click the record button; a "Beep" tone is heard to indicate the start of recording.
Single-click the button again, and a "Boop" tone is heard to indicate the end of recording.
After recording, you can sync and import videos to the "AIBuds" APP to view and share.
Note: To maintain shooting clarity, please keep the device as stable as possible during recording.

3.Audio Recording

Triple-click the record button; a "Beep" tone is heard to indicate the start of recording.
Single-click the button again, and a "Boop" tone is heard to indicate the end of recording.
After recording, you can sync and import audio files to the "AIBuds" APP to view and share.
Note: This product supports photo taking, video recording and audio recording, but the power consumption is relatively high when in use. When the battery level is below 20%, the device will disable these three functions.

4. AI Voice Assistant

①Long press the record button to wake up the AI Voice Assistant; or wake it up by voice saying "Hey Turbo".
②Ask a question, and the AI Voice Assistant will analyze and answer it.

5.AI Memory Manager

①Long press the record button to wake up the AI Voice Assistant; or wake it up by voice saying "Hey Turbo".
②Issue a voice command (e.g.: Remember that my files are on the second layer of the drawer/Remember that my car is parked at B3-001). Or wake up the AI Voice Assistant and ask a question (e.g.: Where are my meeting files/Where is my car parked).

6.AI Intelligent Image Recognition

①Long press the record button to wake up the AI Voice Assistant; or wake it up by voice saying "Hey Turbo".
②Ask a question (e.g.: What is in front of me);heard the prompt tone "click" indicating the completion of shooting; the AI Voice Assistant will analyze and answer the question.
Note: To maintain shooting clarity, please keep the device as stable as possible during shooting.

7.AI Recording

① Open the "AIBuds" app, go to AI Recording, and tap Start.
② After tapping Stop Recording, go to AI Recording History and manually start the transcription and summarization.

8.AI Translation

Text Translation
Open the "AIBuds" app, tap AI Translation, and select Text/Voice Translation. Press and hold the voice input icon to record your voice; release it when finished, or enter text directly for translation.
Conversation Translation
Open the "AIBuds" app, tap AI Translation, and select Conversation Translation. Tap Start Recording to begin, and the translation results will be displayed.
Simultaneous Interpretation
Open the "AIBuds" app, tap AI Translation, and select Simultaneous Interpretation. Choose My Language and Other Person's Language, then enable simultaneous speaking mode to have your speech translated into the target language in real time.

9.Music Playback

After connecting to the mobile phone via Bluetooth, you can play mobile phone music. Single click the power button to play/pause music(Player is in the on state).

10. Call Answering

After connecting to the mobile phone, the AI headphone will automatically broadcast the incoming call ringtone prompt when there is an incoming call.
Single click the power button to answer the call; single click the power button again to end the call.
Double click the power button to reject the call.

08. Precautions

●Please avoid using this product in high-temperature, humid or strong magnetic field environments, as this may interfere with the electronic components of the headphone, affect their normal operation, and damage the battery and internal parts. Please avoid such environments during use and storage.

●This product is a precision electronic device and shall not be subjected to strong impact, extrusion or dropping, which may damage internal parts and affect normal use. Therefore, please keep the headphone properly and avoid strong collision with hard objects.

●When not using the headphone, place them in a dry and ventilated place, avoid direct sunlight. You can use a glasses case or protective cover for storage to prevent collision, extrusion or scratch of the headphone and reduce the risk of damage.

●Please use the charger produced by a formal manufacturer and certified by your local standards to charge the headphone; avoid using inferior chargers to prevent safety issues such as overheating and fire caused by improper charging. Avoid overcharging and over-discharging. Charge the battery in a timely manner when the battery level is below 20%, and unplug the charger after it is fully charged. Charge and discharge the battery once every period of time to maintain battery performance.

●Do not charge in a humid or wet environment, and ensure that the charging area of the headphone and the surface of the charger are clean and in full contact.

●Keep the camera clean during use: wipe them gently with a clean and soft cloth, and avoid using chemical solvents or rough materials to clean the product.

●Regularly check and update the firmware of the AI headphone to obtain new functions, improve performance and fix vulnerabilities. During the update process, ensure sufficient battery power (above 60%) and stable network to avoid device failure caused by update interruption.

●Some functions may be adjusted or changed in the corresponding software versions, which is a normal situation.

●The company reserves the right to modify thecontent of this manual if necessary without prior notice.

*This product supports photo taking and video recording functions. It is strictly prohibited to use this product for candid photography and other illegal activities. Please strictly abide by local laws and regulations and use this product in compliance with the law.

09. Common Faults and Solutions

Common Faults	Solutions
Failed to Power On	Check the battery level and charge the device
Failed to Charge	Check if the charging cable is working properly
Failed to Connect to Mobile Phone	Check if the headphone is powered on and in a connectable state
No Sound for Music and Broadcast	Check if the volume is set properly
Slow or Failed Import of Photos/Videos	Check if the network is working properly

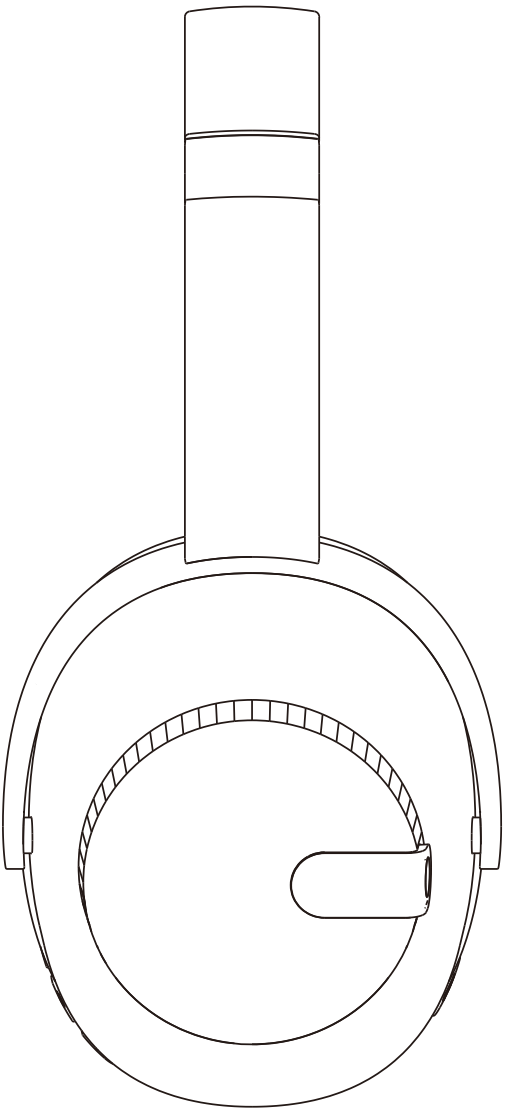

AIBuds
AI智能头戴式摄像蓝牙耳机
快速入门指南

AIBuds AI Smart Camera Wireless
Headphone
Quick Start Guide

This device complies with part 15 of the FCC Rules. Operation is subject to the following two conditions: (1) this device may not cause harmful interference, and (2) this device must accept any interference received, including interference that may cause undesired operation.
Any changes or modifications not expressly approved by the party responsible for compliance could void the user's authority to operate the equipment.
NOTE: This equipment has been tested and found to comply with the limits for a Class B digital device, pursuant to Part 15 of the FCC Rules. These limits are designed to provide reasonable protection against harmful interference in a residential installation. This equipment generates, uses and can radiate radio frequency energy and, if not installed and used in accordance with the instructions, may cause harmful interference to radio communications. However, there is no guarantee that interference will not occur in a particular installation.
If this equipment does cause harmful interference to radio or television reception,
which can be determined by turning the equipment off and on, the user is encouraged to try to correct the interference by one or more of the following measures:
-- Reorient or relocate the receiving antenna.
-- Increase the separation between the equipment and receiver.
-- Connect the equipment into an outlet on a circuit different
from that to which the receiver is connected.
-- Consult the dealer or an experienced radio/TV technician for help.
The device has been evaluated to meet general RF exposure requirement. The device can be used in portable exposure condition without restriction