LinkPower Ultra

Power Bank for Starlink® Mini

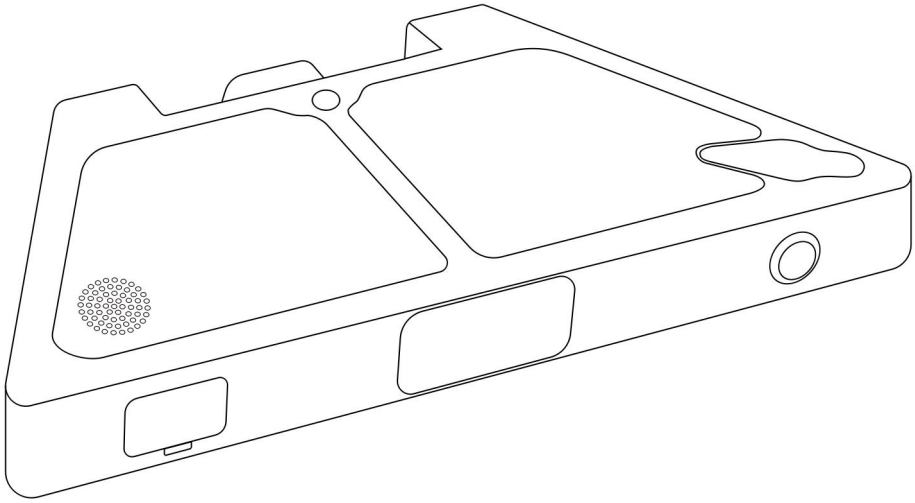

Quick Start

V 3.0

Introduction

Meet the LinkPower Ultra power solution!

The LinkPower Ultra power bank is a compact, high-efficiency power solution engineered with next-generation semi-solid state battery technology, designed exclusively for the Starlink® Mini.

With an airline-safe 99.9Wh battery capacity, LinkPower Ultra provides over 5.5+ hours of continuous runtime, keeping your internet connection alive - even in remote locations.

LinkPower Ultra supports USB-C bidirectional power delivery. With 100W[1,2] USB-C input, it charges from 20% to 80% in just 45 minutes. The USB-C port also delivers 65W output, perfect for powering your phone, laptop, and other USB-C devices.

DC and magnetic DC input ports of LinkPower Ultra:

- When using the original Starlink Mini charger, the maximum input power is up to 60W.
- When used with a 12V car charger, the maximum input power is up to 65W.

Best of all, LinkPower Ultra can power the Starlink® Mini while charging itself via the USB-C port - ensuring uninterrupted operation when you need it most.

Press and hold the power button for 2 seconds. Release the button when the breathing light starts flashing to turn the DC output on or off. Use this function to control power to your Starlink® Mini.

NOTE:

1. Before using LinkPower Ultra for the first time, you must activate it.
   - Plug in an external PD power supply to activate the LinkPower Ultra.
   - Hold the power button for 10 seconds. Activation is complete once the screen turns on.

2. Input (Charging) power limit can be set via Web App. The max power limit is 100W.

3. Warning: Charging or discharging the battery at high power levels may significantly reduce its lifespan. For optimal battery health, avoid excessive power usage unless necessary.
The device may become warm during high-power output. This is normal.

Control Methods

1. Wi-Fi Connection:

After the device is connected to the internet, you can use the app to monitor the status of LinkPower Ultra anytime, anywhere and set scheduled power on/off.

Note:

- Manual power-off is not supported via the app.
- The device does not support remote power-on or power-off via Wi-Fi.

2. **Bluetooth Connection:**

After pairing the device with the app via Bluetooth, you can:

- Turn the device on or off
- Enable or disable the DC output
- View the device status
- Set Scheduled Power On/Off

3. **Button Control:**

The physical button can be used to:

- Turn the device on or off
- Enable or disable the DC output
- Refer to the following sections for additional button functions.

What's In the Box

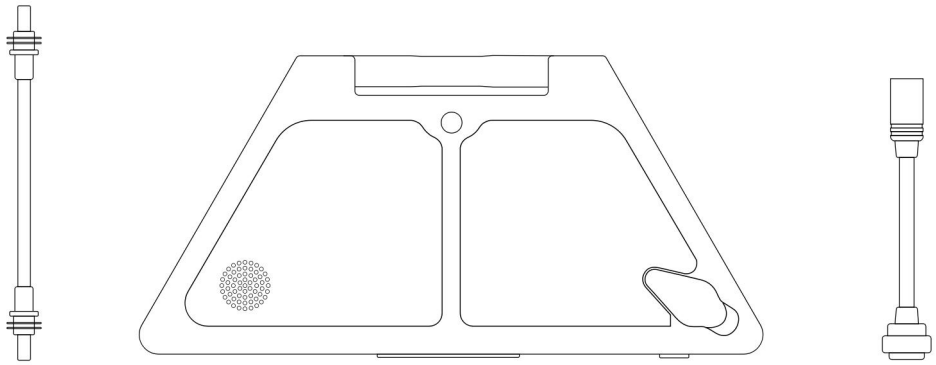

DC-to-DC Cable

LinkPower Ultra

DC to magnetic DC cable

Device Overview

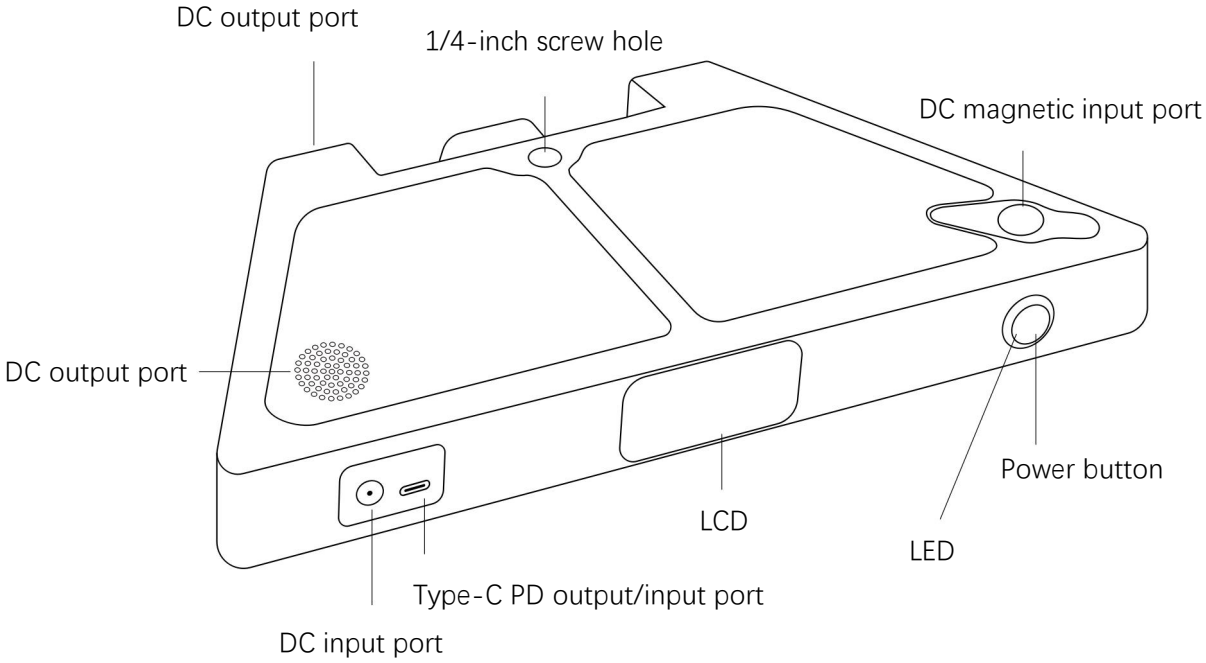

WARNING: The DC output port is for output only. Do not connect any DC power adapters, as it may damage the device.

Intelligent Active Cooling System

To ensure sustained high-performance and maximize battery lifespan, LinkPower Ultra features a fully automated thermal management system:

- **Auto-Start at 52°C:** When the internal temperature reaches 52°C, the active cooling fan triggers automatically to dissipate heat quickly.
- **Auto-Stop at 45°C:** Once the temperature cools down to 45°C, the cooling system automatically shuts off to save energy and maintain silent operation.

Note: Please keep ventilation grilles clear of obstructions during operation to ensure optimal thermal performance.

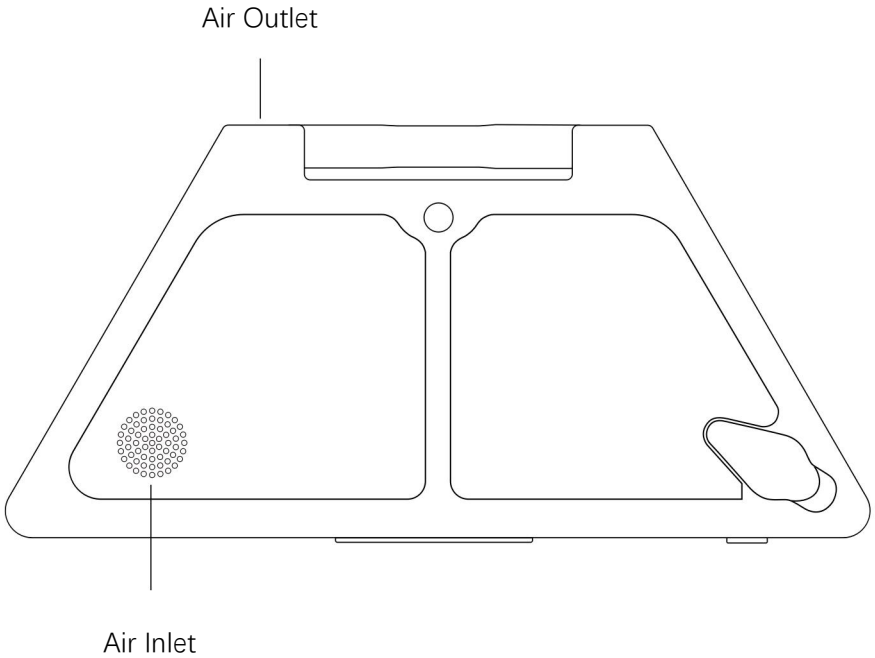

Setup

WARNING: The DC output port is for output only. Do not connect any DC power adapters, as it may damage the device.

1. Place the Starlink® Mini face down on a table or other flat surface. Be careful not to scratch the face of the Starlink® Mini. Remove the kickstand if used.

2. Unpack the LinkPower Ultra and plug the included DC-to-DC cable into the DC port on the LinkPower Ultra.
3.

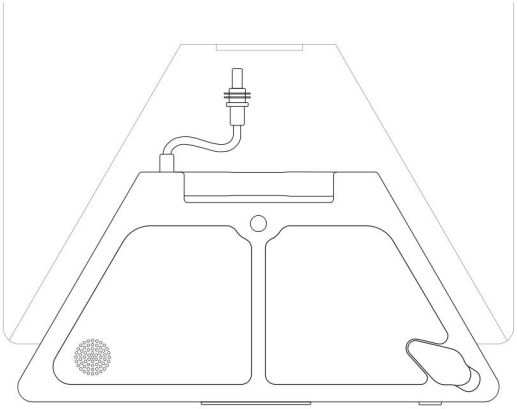

4. Plug the other end of the DC cable into the DC port on the Starlink® Mini. Ensure the plug is fully inserted such that the plug face is flush with the DC port surface to guarantee a secure connection.

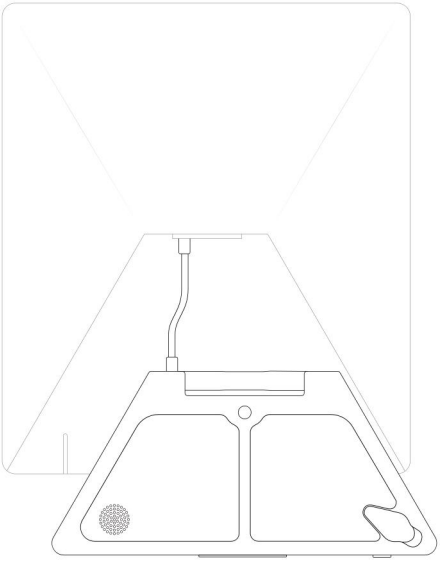

5. Plug in an external PD power supply to **activate** the LinkPower Ultra. Alternatively, press and hold the power button for 10 seconds. Activation is complete once the screen turns on. When the LinkPower Ultra powered on, the LED indicator on the power button will light up. The Starlink® Mini will automatically power on, and its LED indicator will begin flashing.

   NOTE: After LinkPower Ultra has been activated, you can remove the external PD power supply.

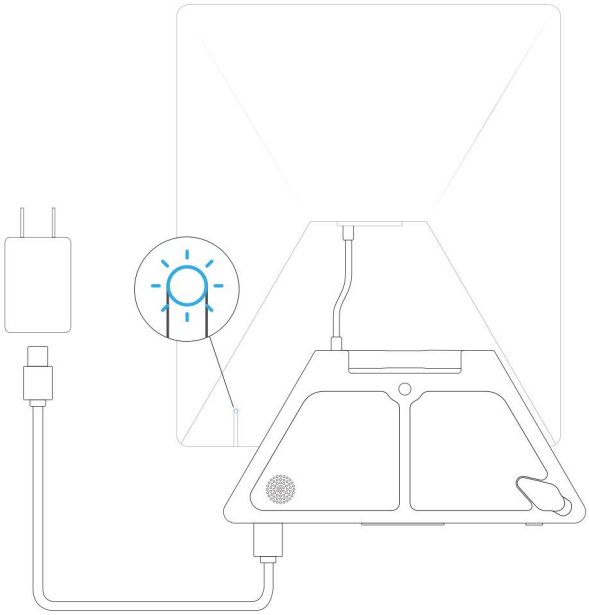

6. Gently slide the LinkPower Ultra toward the Starlink® Mini until you hear a clicking sound. This indicates that the LinkPower Ultra is securely attached to the Starlink® Mini.

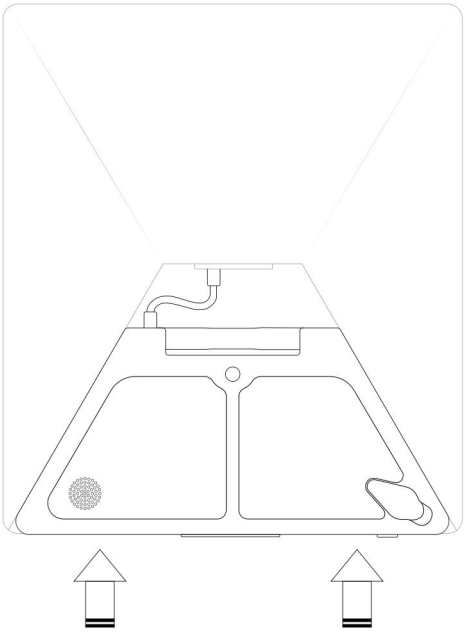

7. Setup is complete. You can now use your Starlink® Mini as normal, powered by the attached LinkPower Ultra.

Usage

Charging

LinkPower Ultra supports the following three charging methods while simultaneously powering the Starlink Mini:

1. Type-C PD Charging： Charge LinkPower Ultra via the Type-C PD port while (Supports PD 3.1, PPS, and QC5。Compatible with QC 3.0 / 2.0, FCP, AFC, SCP, and Apple 2.4A)

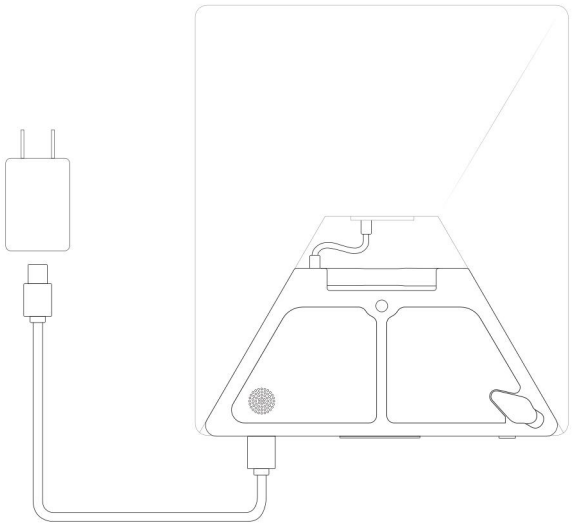

2. DC Input Charging： Charge LinkPower Ultra through the DC input. Compatible with the original Starlink Mini power adapter, enabling charging and operation at the same time.

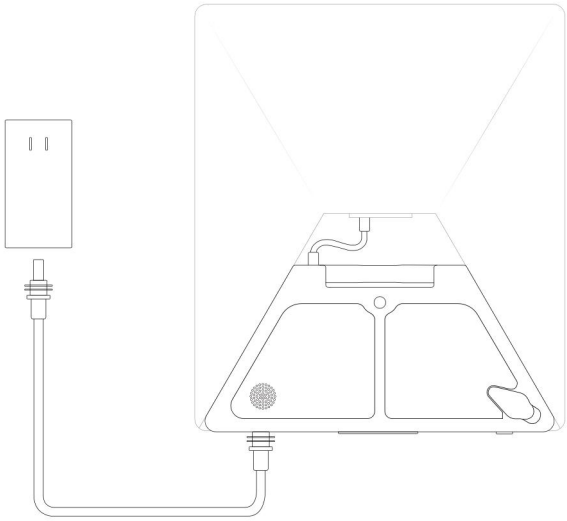

3. Magnetic DC Charging: Supports charging via a DC-to-DC magnetic connector (standard with LinkPower Ultra) when connected to a DC power supply.

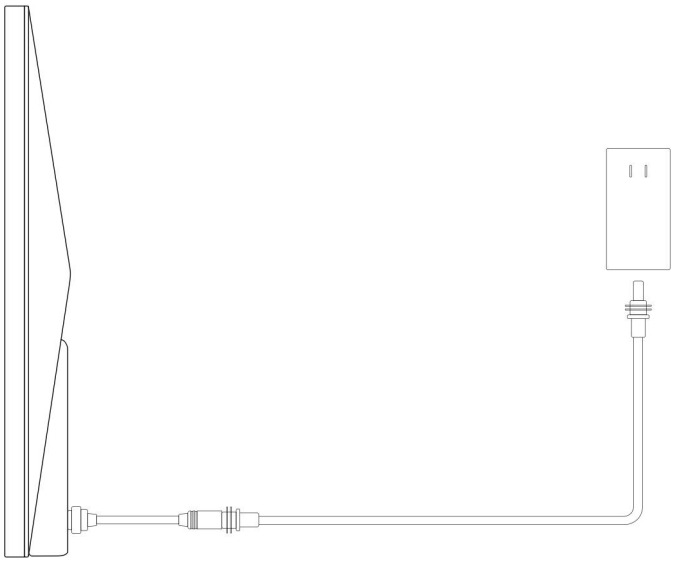

Works as a normal power bank

When needed, LinkPower Ultra can also be used to charge other devices through its USB Type-C PD port.

NOTE: The power bank reserves approximately 10%~15% of its capacity for the Starlink Mini. When the remaining battery level falls below this range, the Type-C output will automatically turn off to ensure better overall usability and avoid your Starlink Mini powering down unexpectedly (due to USB outputs draining the battery).

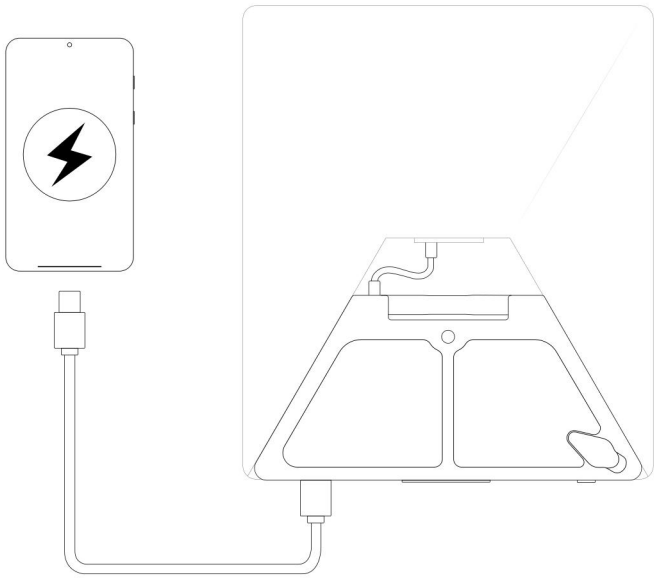

Power Button Functions

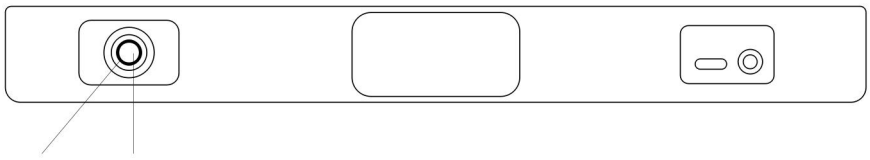

Breathing LED Power button

1. Power Off

Press and hold the power button for approximately 10 seconds to turn off LinkPower Ultra.

2. DC Output Toggle

Press and hold the power button for approximately 2 seconds. Release the button when the breathing light starts flashing to turn the DC output on or off.

3. Breathing Light On / Off: (When the DC output port is on) Quickly press the power button twice to turn the breathing light on or off.

4. Sleep Mode

Press and hold the power button for approximately 6 seconds. Release the button when the breathing light starts flashing to enter sleep mode.

To wake up the device, press and hold the power button for approximately 6 seconds until the screen turns on.

Check the status

To check the status of LinkPower Ultra, press Power Button once to turn on the LCD screen.

Following is the layout of the full UI:

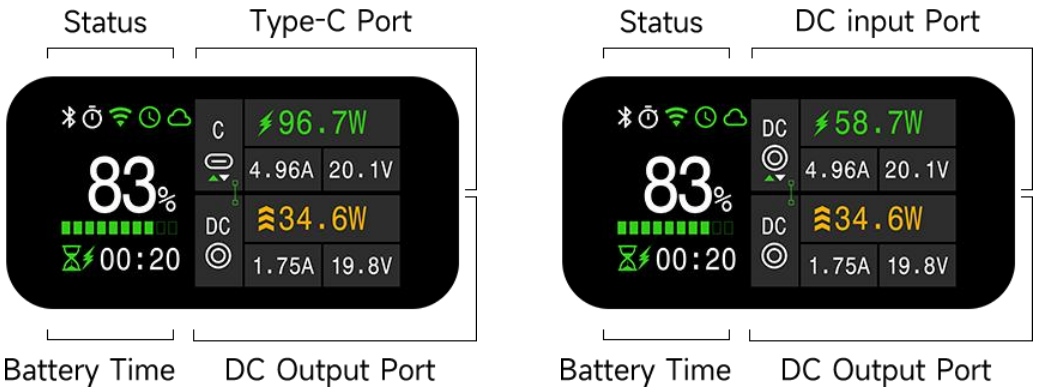

Battery Level	Displays Battery Level
Battery Time	Displays the estimated time until LinkPower Ultra is fully charged Displays the estimated time until LinkPower Ultra is fully discharged
Status	**Bluetooth** White: Not connected Green: Connected **Alarm / Timer** White: Off / not set Green: Enabled **Clock Sync** Gray: Not synced Green: Synced **WiFi** Gray: Off Green: Connected Red: Connection failed Flashing: Connecting **Amazon Cloud** Gray: Off Flashing: Connecting Green: Connected Green: Bound
DC output Port	Displays the power, current, voltage and work status of the DC port Indicate DC port is discharging
DC input Port	Displays the power, current, voltage and work status of the DC port ▲ Charging is in progress via the DC port
Type-C Port	Displays the power, current, voltage and work status of the Type-C port Indicate Type-C port is charging Indicate Type-C port is discharging ▲▼ Enable charging or discharging ▲ Enable charging-only mode
Bypass State	Located between the DC and Type-C displays When the color is yellow, it indicates manual activation When the color is green, it indicates automatic activation

When the DC port is enabled, the LED indicator will gently pulse.

Open the app, scroll down to find the Type-C port, and tap the button on the right to switch between Charge Only and Charging/Discharging

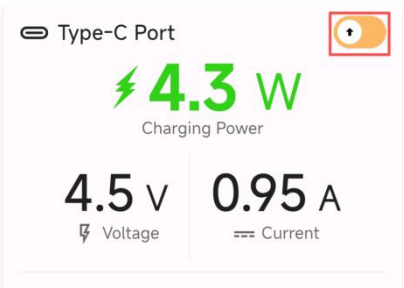

Charging Only

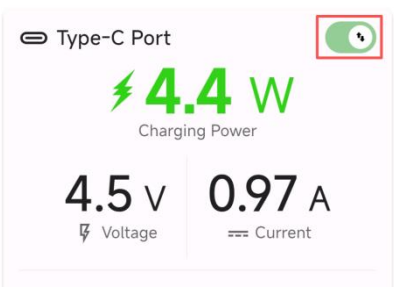

Charging or Discharging

Smart Bypass Mode — Always On Power

Directly power your Starlink Mini from external source

No interruption Smarter protection

How Bypass Mode Works :

- **Manual Activation:**

  Enable Bypass anytime via Web App for direct power supply.

- **Auto at Low Battery:**

  When battery drops below 3%, external power automatically takes over.

  → Keeps Starlink Mini running without interruption

- **Auto at Full Charge:**

  When battery reaches 100%, Bypass activates automatically

  → Prevents overcharging and protects battery lifespan

- **Ensure Sufficient Input Power** (External Power ⩾ Starlink Mini Power Consumption):

  When battery is extremely low, the external power source must provide enough output power to run Starlink Mini directly.

  If power is insufficient, the device may not operate properly.

Manually Controlling the DC Port

You can manually enable or disable the LinkPower Ultra's DC port, which in turn powers your Starlink® Mini on or off.

To do this, press and hold the Power Button for at least 2 seconds. The LED indicator will quickly flash twice to confirm this action.

- When the DC port is enabled, the LED indicator will gently pulse.
- When the DC port is disabled, the LED indicator will turn off.

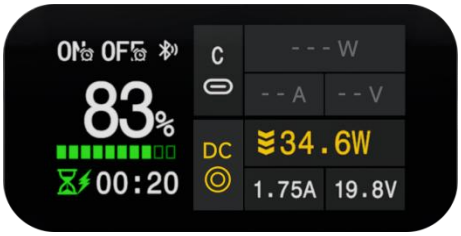

enabled

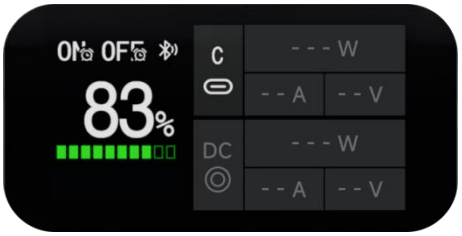

disabled

Shutting Down LinkPower Ultra

If you don't plan to use LinkPower Ultra for an extended period, you can shut it down completely. This helps to preserve battery life and health.

To do so, press and hold the Power Button for at least 10 seconds. Once LinkPower Ultra is fully shut down, the Power Button will become unresponsive.

To restart LinkPower Ultra from a complete shutdown, Plug in an external PD power supply to **activate** the LinkPower Ultra. Alternatively, press and hold the power button for 10 seconds. Activation is complete once the screen turns on.

Using Web App

NOTE: The Web App currently only works on following browsers:

- Windows/macOS: Chrome, Edge, Opera
- Android: Chrome, Edge, Opera, Samsung Internet
- iOS: Bluefy

NOTE: The Web App can function offline after your initial visit.

Access Web App

Scan the following QR code, or the one on the back of the LinkPower Ultra.

Or type in the URL https://pwa-dev.peakdo.ca/lp3/ manually.

(Optional) Install Web App

NOTE: You may need to grant your browser 'Home screen shortcuts' permission.

You can access the Web App directly in your browser. For a more integrated experience, you can also install it like a native app, which provides a launch icon on your desktop or allows it to be pinned to your Windows Taskbar.

When you visit the Web App for the first time, your browser may prompt you to install it.

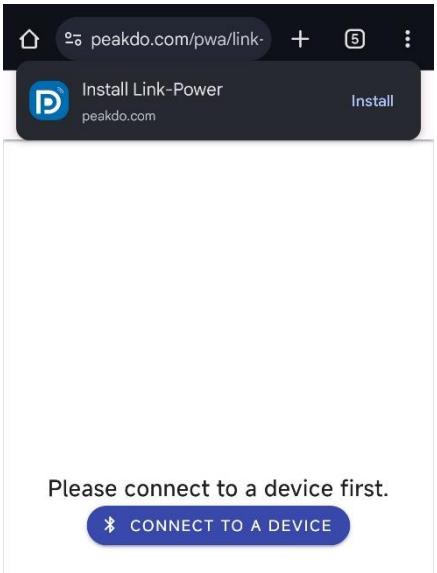

If not, you can typically find the installation option via your browser's "Add to Home screen" or similar menu.

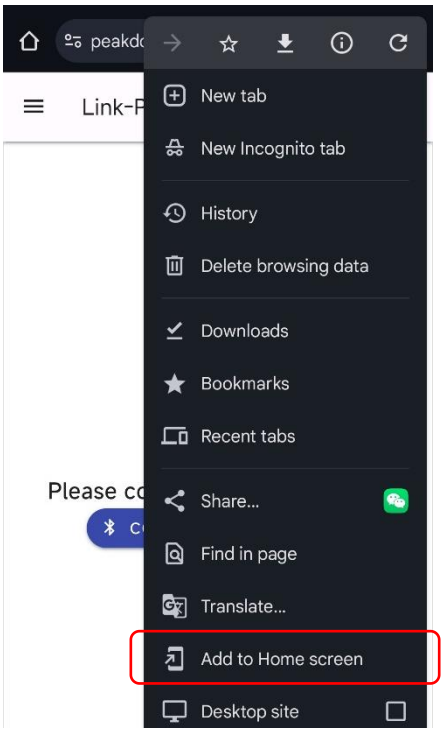

Follow the on-screen guide to install the Web App:

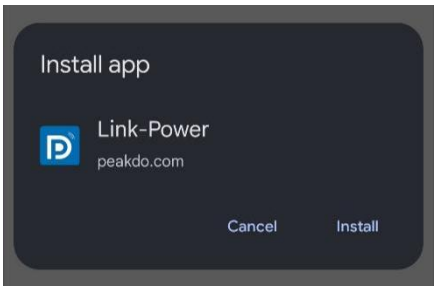

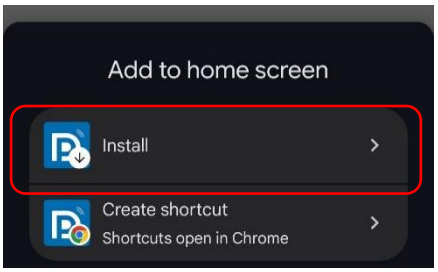

Connect to LinkPower Ultra

The Web App communicates with LinkPower Ultra via Bluetooth.

Note: In some cases, the Bluetooth device name may appear as ESP32.

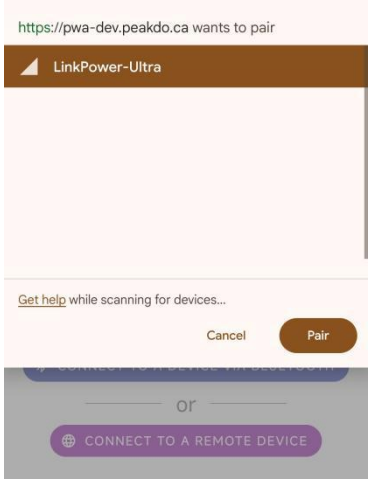

You can connect to your LinkPower Ultra by tap the “Connect to a device” button.

Your browser will scan for all nearby LinkPower Ultra devices and display them in a list, allowing you to select one to pair.

NOTE: In some situations, a previously paired or bonded device may not show up in the list. You can unpair or remove the bond from your system and try again.

Grant permission to Browser

If your browser lacks Bluetooth access permission, it may prompt you to grant it.

Follow the on-screen guide to allow access:

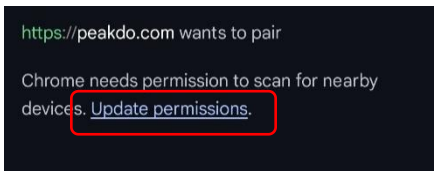

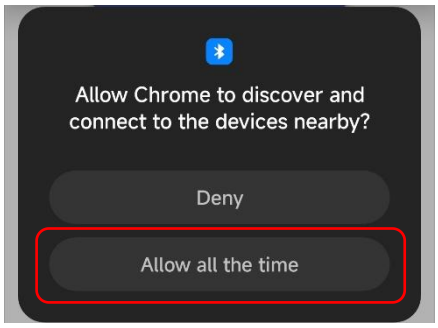

Pair with LinkPower Ultra

When connect to the LinkPower Ultra device, your operating system (OS) will prompt you to enter a PIN to pair with the LinkPower Ultra device. You'll only need to do this once, unless you delete the LinkPower Ultra bond from your OS settings.

NOTE: A random six- digit PIN will be displayed on the LCD screen. If not, use the default PIN 020555.

Troubleshooting

Our Web App has been successfully tested with the following browsers:

- Windows/macOS: Chrome, Edge
- Android: Chrome, Edge, Samsung Internet
- iOS: Bluefy

1. Activate LinkPower Ultra, and make sure Bluetooth is turned on: the Bluetooth icon should be highlighted white (not green or dim grey) on top of the screen.
2. Make sure your system has Bluetooth hardware and it is turned on:
   - For Windows
     - Go to `Settings` → `Bluetooth & devices`. Make sure Bluetooth is turned on
     - In `Bluetooth & devices`, click `Add device`
     - Choose `Bluetooth`
     - Wait for Windows to discover your BLE device, you should see the device named `Link-Power-3` in the list
   - For Android
     - Make sure Bluetooth is turned on
     - you should see the device named `Link-Power-2` in the `Available devices` list
3. Install and launch a supported browser

Specifications

Product Name	LinkPower Ultra
Battery Capacity	99.9Wh, 27000mAh(3.7v)
Battery Runtime	~5.5Hours for Starlink® Mini
Battery Type	21700 Lithium Battery
Ports	PD/USB-C; DC 5.5 x 2.1； magnetic DC
DC Input	DC 12-30V (65W Max)
DC Output	DC 15-21V (65W Max)
PD/USB-C Input	5V-3A; 9V-3A; 12V-3A; 15V-3A; 20V-3.25A; Default 65W Max[1,2].
PD/USB-C Output	5V-3A; 9V-3A; 12V-3A; 15V-3A; 20V-3.25A; Default 65W Max
Screen	1.05" LCD
Control	Power Button / Bluetooth Low Energy
Others	LED Indicator; A standard 1/4-inch screw holes.
Dimensions	243mm x 115mm x 27 mm
Weight	~663g
Working Temperature	-20℃ ~ 60°C
Waterproof Rating	IP65

1. Input (Charging) Power Limit can be set via Web App. The max power limit is 100W.

2. Warning: Charging or discharging the battery at high power levels may significantly reduce its lifespan. For optimal battery health, avoid excessive power usage unless necessary.

FCC Warnning:

This equipment has been tested and found to comply with the limits for a Class B digital device, pursuant to part 15 of the FCC Rules. These limits are designed to provide reasonable protection againstharmful interference in a residential installation. This equipment generates, uses and can radiateradio frequency energy and, if not installed and used in accordance with the instructions, maycause harmful interference to radio communications. However, there is no guarantee thatinterference will not occur in a particular installation. If this equipment does cause harmfulinterference to radio or television reception, which can be determined by turning the equipmentoff and on, the user is encouraged to try to correct the interference by one or more of thefollowing measures:

- Reorient or relocate the receiving antenna.
- Increase the separation between the equipment and receiver.
- Connect the equipment into an outlet on a circuit different from that to which the receiver is connected.
- Consult the dealer or an experienced radio/TV technician for help.

Caution: Any changes or modifications to this device not explicitly approved by manufacturer could void your authority to operate this equipment.

This device complies with part 15 of the FCC Rules. Operation is subject to the following two conditions:

(1)This device may not cause harmful interference, and (2) this device must accept any interference received, including interference that may cause undesired operation.

This equipment complies with FCC radiation exposure limits set forth for an uncontrolled environment. This equipment should be installed and operated with minimum distance 20cm between the radiator and your body.