Parts:

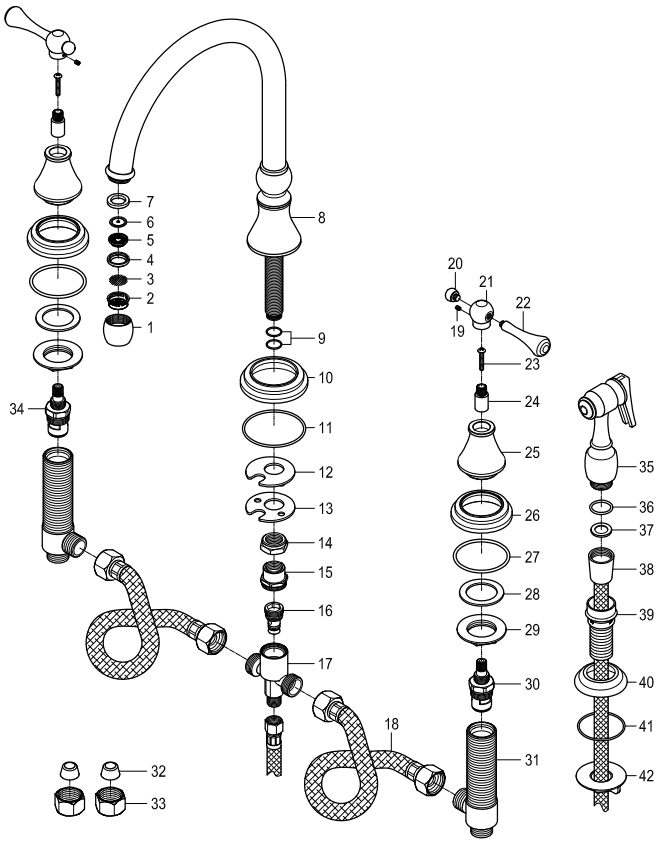

Replacement Parts:

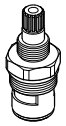

Hot Cartridge: KSRPL2000HC

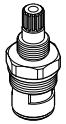

Cold Cartridge: KSRPL2000CC

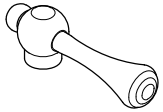

Handle: KSH3961BL

KINGSTON
KITCHEN & BATH

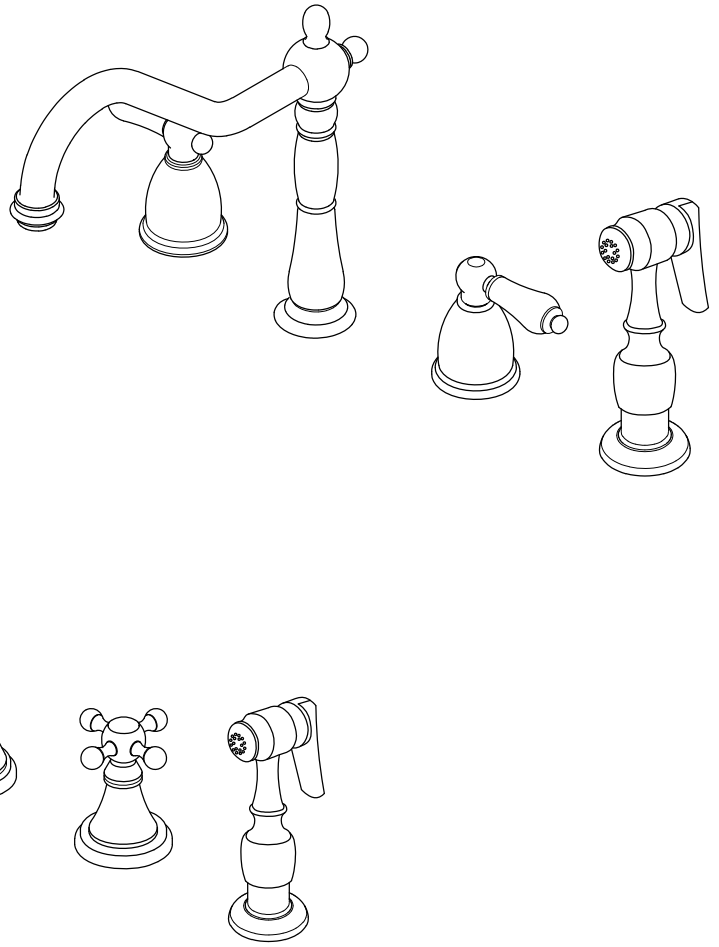

CARE AND MAINTENANCE OF YOUR FAUCET

Your Kingston Brass faucet has been finished to the most strict standards; however, due to the high content of minerals in the water, your finish may appear dull and tarnished after time. These are some do's and don'ts to maintain the luster on your faucet for many years to come.

DO
1. Use a silicon based caulking when installing.
2. Clean your faucet with only a mild soap and water solution.
3. Dry your faucet after using it.
4. Give it a coat of Carnauba Wax periodically.

DON'T
1. Use plumbers putty when installing the faucet.
2. Use any abrasive cleaning agents.

It may seem like a very simple and short list but it is that simple to maintain your faucet, looking shiny and new.

If your faucet is already looking somewhat dull and tarnished, before replacing it, try cleaning it with a 50/50 solution of vinegar and water, you may need to soak some rags and wrap around those stubborn areas, leave overnight and rinse completely in the morning, apply Carnauba wax once you have removed the mineral deposits.

Parts:

Washer & Lock Nut	Cone Washer & Coupling Nut
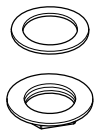	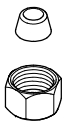
2 Pcs	2 Pcs

www.kingstonbrass.com
TOLL-FREE CUSTOMER SERVICE: 1-877-2-KBRASS
TECHNICAL SUPPORT E-mail: service@kingstonbrass.com
12775 Reservoir Street, Chino, CA 91710

NOTICE

Failure to follow all directions may cause leaks which may result in water damage

KINGSTON
KITCHEN & BATH

INSTALLATION INSTRUCTIONS
Widespread Kitchen Faucet with or without Sprayer

BEFORE BEGINNING INSTALLATION:

1. Flush plumbing lines to clear any debris.
2. Shut off both supply lines after flushing.

Need Tools:

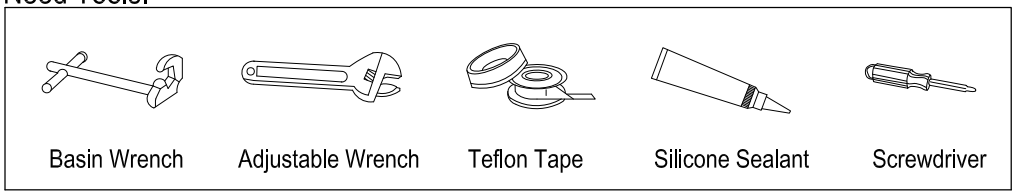

1

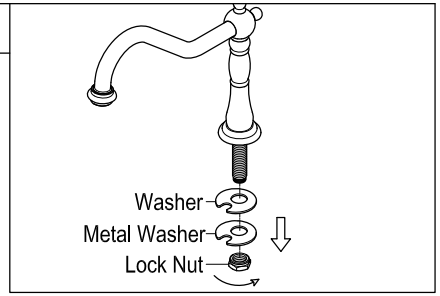

1. Remove the spout mounting hardware from spout .

2

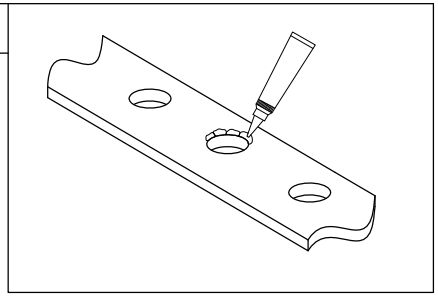

2. Sparingly apply a small bead of silicon caulking around the center hole on top of the sink (do not use Plumber's Putty as it may damage finish and void warranty).

3

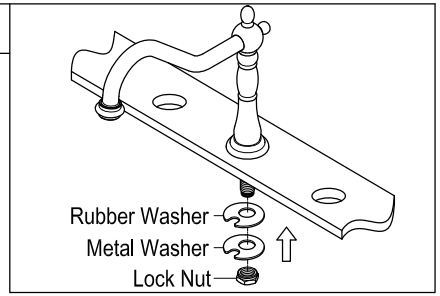

3. From the top of the sink insert the spout base ring and spout through the center hole.
Slip the spout mounting hardware back onto the spout, tighten lock nut.

4

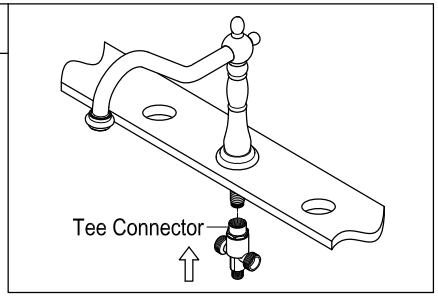

4. Place the tee connector to end of spout and thread tee connector onto spout shank.

5

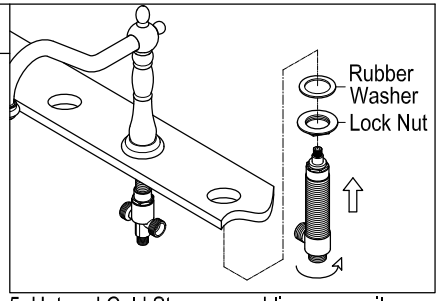

5. Hot and Cold Stem assemblies are easily Identifiable by a Red (Hot) or Blue (Cold) band, thread lock nut and insert rubber washer on stem assembly and insert stem assembly through side holes from below .

6

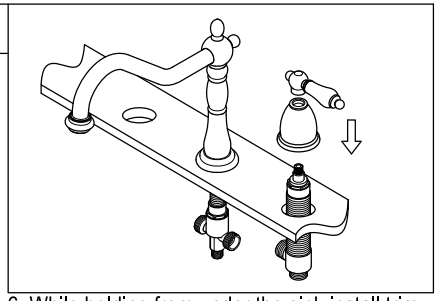

6. While holding from under the sink install trim ring (if applicable) and thread escutcheon on to stem assembly, install handle and adjust to a suitable height to allow sufficient space for handle to operate smoothly.
Tighten bottom nut please make sure to align direction of lever handles before tightening stem.

7

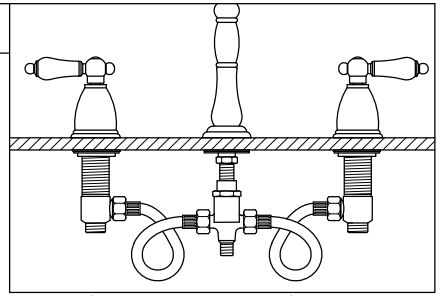

7 Attach flex line to outlet port of stem assembly and spout tee, (you may need to loop flex lines as shown on graphic) use caution to not over tighten.

8

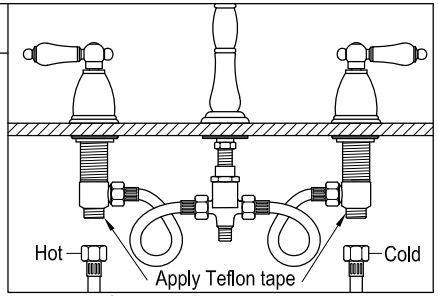

8. Apply Teflon tape on all male threads and Install inlet flexible lines (not included) to inlet port of stem assembly.

9

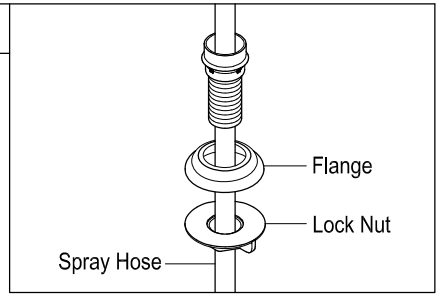

9. For models with side spray, insert spray guide through the fourth hole in the sink, thread lock nut into the shank and tighten firmly.

10

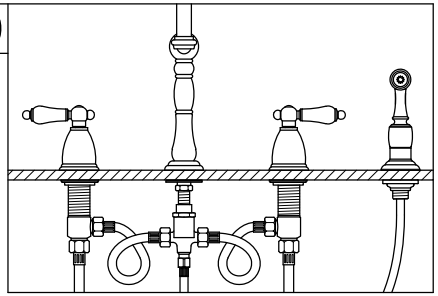

10. Insert the hose through the guide and thread onto bottom outlet of the tee.
Once connections have been made turn on water supply and check for leaks

11

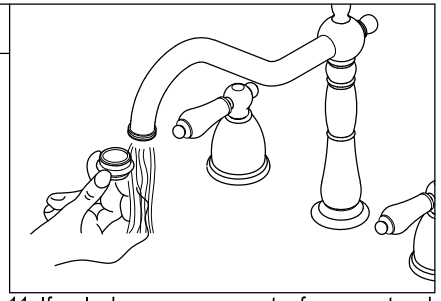

11. If no leakage remove aerator from spout and turn the handles to the full open position, let the water run for at least 30 seconds.

Warning!!!

- Do not over-tighten nut during installation.
- Over-tighten may crack the valve and cause severe leak.

12

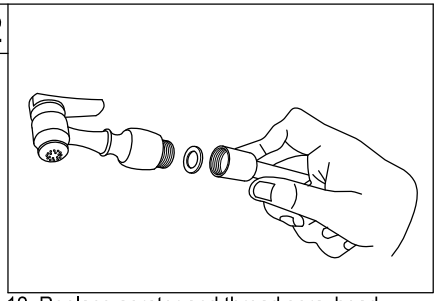

12. Replace aerator and thread sprayhead.

© 2022-10-E Kingston Brass