PRORUN®

GAS///

Operator's Manual

CHAINSAW

MODEL: PCS560C

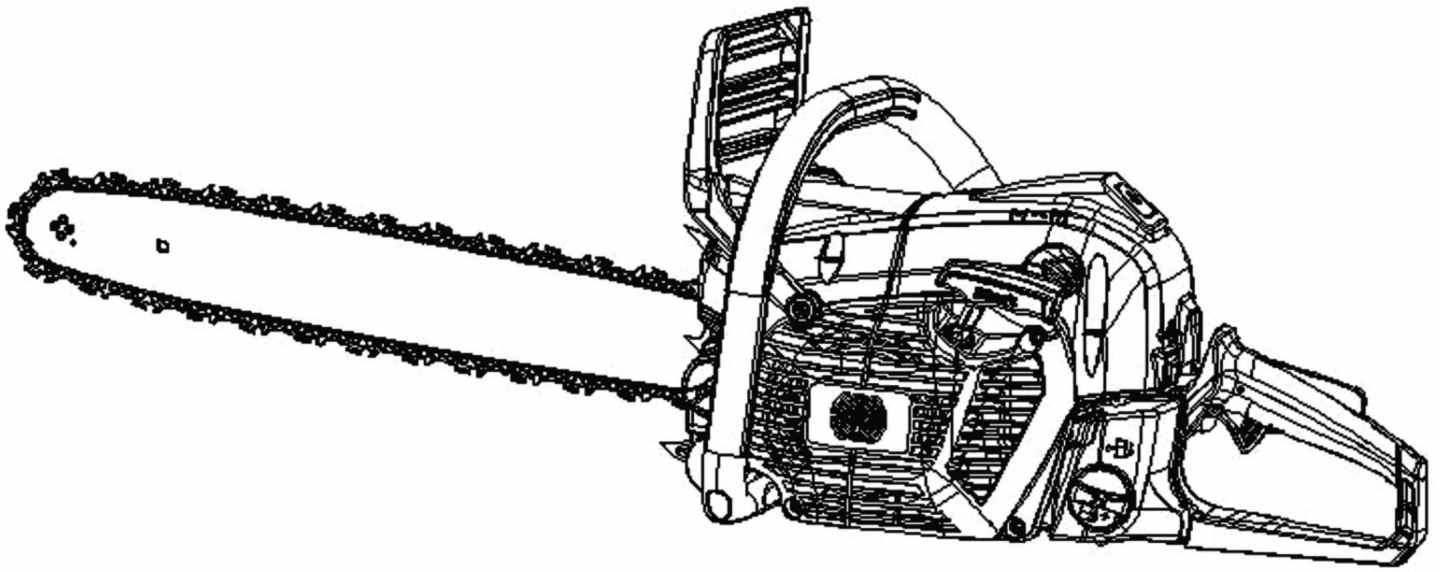

Everything PRORUN

Before operating, read the instructions.

⚠ **IMPORTANT - READ CAREFULLY BEFORE USE**

⚠ **IMPORTANT SAFETY INSTRUCTIONS – SAVE THESE INSTRUCTIONS**

WARNING: To reduce the risk of injury, the user must read and understand the Operator's Manual before using this product. Save these instructions for future reference.

Please let us know what you think.
To leave a review and see our full line of products, visit:

proruntech.com ★★★★★
1-844-905-0882, info@proruntech.com

Version: B - Issue Date: 2023/03/31

EN

CONTENTS

SAFETY FIRST

Instructions contained in warnings within this manual marked with a symbol concern critical points which must be taken into consideration to prevent possible serious bodily injury, and for this reason you are requested to read all such instructions carefully and follow them without fail.

■ WARNINGS IN THE MANUAL

WARNING

This mark indicates instructions which must be followed in order to prevent accidents which could lead to serious bodily injury or death.

IMPORTANT

This mark indicates instructions which must be followed, or it leads to mechanical failure, breakdown, or damage.

NOTE

This mark indicates hints or directions useful in the use of the product.

1. Parts location....4
2. Symbols on the machine....5
3. For safe operation....8
4. Installing guide bar and saw chain....12
5. Fuel and chain oil....13
6. Operation 15
7. Sawing 21
8. Maintenance....25
9. Maintenance of Saw Chain and Guide Bar 28
10. Storage....30
11. Waste disposal and environmental protection....30
12. Troubleshooting guide....31
13. Specifications 32

CONTENTS

Attention ! Read these notes before you start working with the saw and keep them.

Read the instructions carefully. Become familiar with the control elements so that you are able to safely operate the device. Always keep this Operator's Manual together with the chainsaw.

Attention! Risk of hearing defects.

Under normal operating conditions, this device can expose the operator to a noise level of 80 dB(A) or more.

The chain-saw shall be held with the right hand on the rear handle and the left hand on the front handle.

Attention: Noise protection! Please observe the local regulations when operating your device.

Intended / not intended use:

The chainsaw severs trunks, squares timbers, and cuts branches, according to the available cutting length. Only materials from wood may be worked on.
Sufficient personal protection equipment (PPE) is required according to the operating instructions during the use. This product is designed for use by a trained operator for felling, logging, and limbing. Damages or injuries which result from misapplication are the responsibility of the user/operator and not the manufacturer. Use only sawing chain and guide bar combinations as listed in this operator's manual for the machine. A component of the intended use is also the attention of the safety references, as well as the operating instructions in the operator's manual. Persons, who serve the machine, must make themselves trained and familiar with this product and think over all the possible dangers. Beyond that, the valid rules for the prevention of accidents are to be kept in every detail. Other general rules within ranges according to industrial medicine and in terms of safety are to be considered. Changes in the machine completely exclude any support of the manufacturer, and from it developing damage, and leads to expiring the warranty. This equipment is designed for use in home gardens.

CONTENTS

In addition, when appropriately using the tool, there remains a certain residual risk which cannot be excluded. The following potential endangerments can be derived from the operation and construction of the tool:

- Contact with the unprotected sawing chain (cuts)
- Unexpected and/or sudden movement of the sawing sword (cuts)
- Damage of the ears if no prescribed protection of the ears is carried
- Inhalation of poisonous particle and/or exhaust gases of the combustion engine
- Contact of gasoline on the skin
- Noise. A degree of noise from the machine is not avoidable. Routine noisy work is to be licensed and limited for certain periods. Keep rest periods and restrict the working hours to a minimum. For personal protection and the protection of people working nearby, an appropriate hearing protection should be worn.

Warning: The actual existing vibration emission value during the use of the machine can deviate from the operator's manual or the manufacturer's specifications. This can be caused by several factors. Before or during each use, the following should be considered:

- If the machine is being used correctly.
- If the method of cutting the material, and how it is processed, is being executed correctly.
- The use of the machine and its stated condition is in the regulation.
- The sharpness and condition of the cutting tool.
- The grab handles are optional vibration handles and are correctly fixed to the machine body.

Keep in place adequate work breaks. In disregard of adequate work breaks there may be a hand-arm vibration syndrome, an unpleasant sensation or skin discoloration on your hands once you stop working.

Warning: National regulations (Occupational Safety and Health, environment) may be present, which can restrict the use of the chainsaw.

1. Parts location

1. Saw chain
2. Guide bar
3. Front hand guard
4. Starter handle
5. Cylinder shield
6. Choke knob
7. Engine switch
8. Rear handle
9. Trigger lock-out
10. Throttle trigger
11. Fuel tank cap
12. Front handle
13. Oil tank cap
14. Guide bar
15. Primer bulb
16. Pressure relief valve
17. Spiked bumper
18. Clutch cover

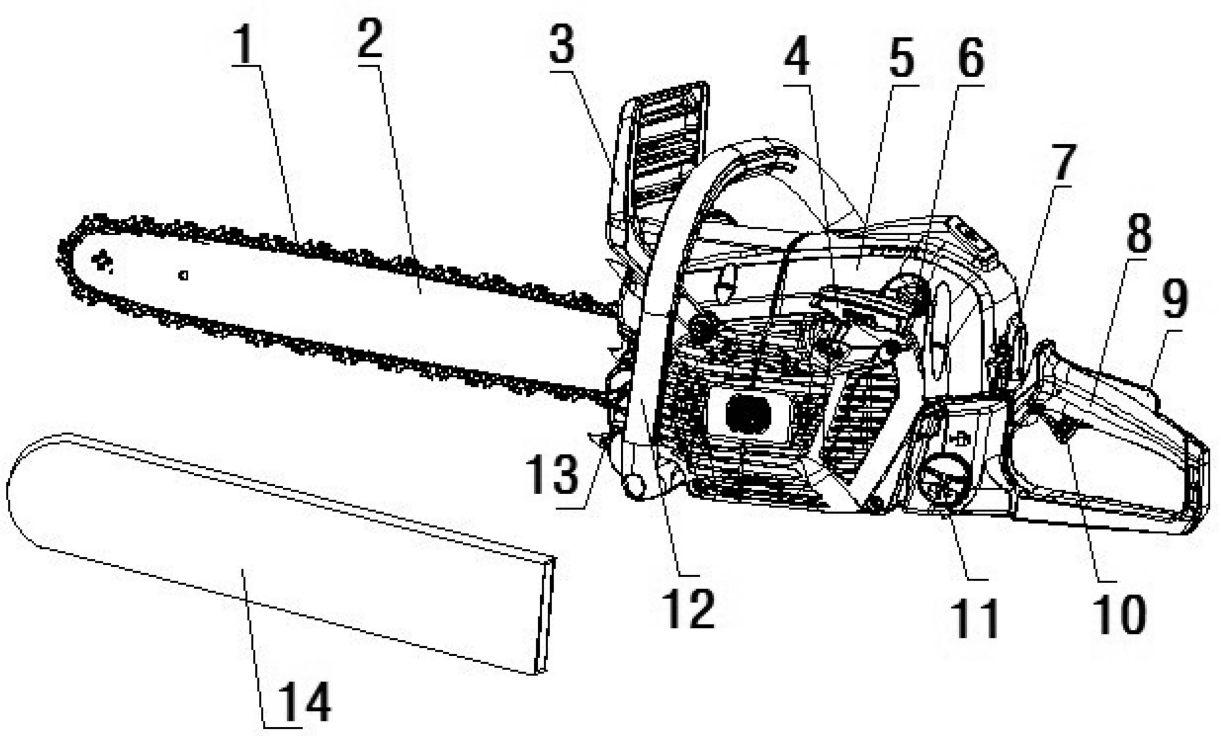

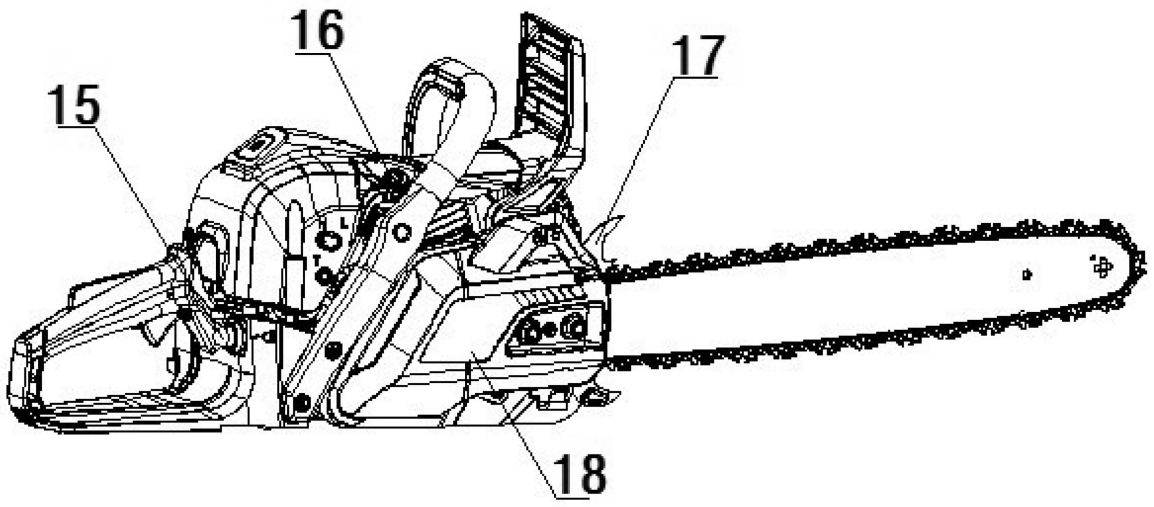

2. Symbols on the machine



(1) Read, understand, and follow all warnings.



(2) Warning! Danger of kickback. Beware of chainsaw kickback and avoid contact with bar tip.



(3) Do not use chain saw one-handed.



(4) Always use chain saw two-handed.



(5) Appropriate ear, eye, and head protection must be worn



(6) Read operator's instruction book before operating this machine.

.



(7) Always wear safety and anti-vibration (AV) gloves when operating the device.



(8) Always wear safety and slip-resistant boots when operating the device.

2. Symbols on the machine

For safe operation and maintenance, symbols are carved in relief on the machine. According to these indications, please be careful not to make any mistake.



(a). The port to refuel the "MIX GASOLINE"
Position: near the fuel cap



(b). The port to refuel the chain oil
Position: near the oil cap

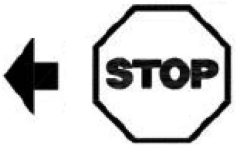

(c). Operate the engine switch
Flipping the switch to the left position, immediately stops the engine
Position: at the left side of the rear handle



(d). Operate the choke knob
Turn left the choke knob, close the choke; turn right the choke knob, open the choke.
Position: at the upper cover.



(e). Adjust the oil pump
If you turn the rod by screwdriver counterclockwise, the chain oil flows more, and if you turn it clockwise, the chain oil flows less.
Position: Bottom of the rear handle



(f). The screw under the "H" stamp is The High-speed mixture adjustment screw.
The screw under the "L" stamp is The Low-speed mixture adjustment screw.
The screw up the "T" stamp is the idle speed adjustment screw.
Position: upper-right of the rear handle

2. Symbols on the machine

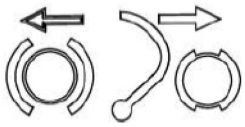

(g). Shows the directions that the chain brake is released (white arrow) and activated (black arrow).
Position: Front handle guard

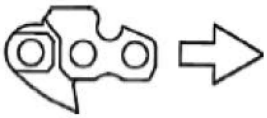

(h). Shows the direction of the saw chain installation.
Position: Front of the chain cover



(I). Guaranteed sound power level for this equipment.

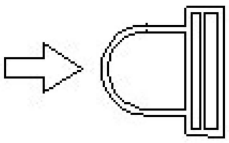

(J). Press the direction of the primer bulb.
Position: Right side of the tank base



(k). Carburetor anti-freeze mechanism
Normal operating mode

Anti-freeze mode



(l).Cylinder pressure reducing valve device

3. For safe operation

■Before operating the product

1. Before using our products, please read this manual carefully to understand the proper use of your unit.

2. Never operate a chain saw when you are fatigued, ill, or upset, or under the influence of medication that may make you drowsy, or if you are under the influence of alcohol or drugs.

3. Operate the chainsaw only in well-ventilated areas. Never start or run the engine inside a closed room or building. Exhaust fumes contain dangerous carbon monoxide. Lubrication oil mist and saw dust are poisonous to the operator.

4. Never cut in high wind, bad weather, when visibility is poor, or in very high or low temperatures. Always check the tree for dead branches which could fall during the felling operation.

5. Use safety and slip-resistant footwear, snug fitting clothing, safety goggles, hearing protection devices, and work helmets. Use the anti-vibration (AV) glove.
It is believed that a condition called Raynaud's phenomenon, which affects the fingers of certain individuals may be brought about by exposure to vibration and cold. Loss of color and numbness in the fingers. The following precautions are strongly recommended because the minimum exposure which might trigger the ailment is unknown.
Keep your body warm, especially the head, neck, feet, ankles, hands, and wrists.
Maintain good blood circulation by performing vigorous arm exercises during frequent work breaks and also by not smoking. Keep the saw chain sharp and the saw, including the AV system, well maintained. A dull chain will increase cutting time and pressing a dull chain through wood will increase the vibrations transmitted to your hands. A saw with loose components or with damaged or worn AV buffers will also tend to have higher vibration levels. Limit the hours of operation.
All the above mentioned precautions do not guarantee that you will not sustain white

finger disease or carpal tunnel syndrome. Therefore, continual and regular users should monitor closely the condition of their hands and fingers.
If any of the above symptoms appear, seek medical advice immediately.

6. Always use caution when handling fuel. Wipe up all spills and then move the chainsaw at least ten (10) feet (three (3) m) from the fueling point before starting the engine. Allow your chainsaw to cool down before refueling.

7. Eliminate all sources of sparks or flame (e.g., smoking, open flames, or work that can cause sparks) in the areas where fuel is mixed, poured, or stored.
Do not smoke while handling fuel or while operating the chainsaw.

8. Do not allow other persons to be near the chainsaw when starting the engine or cutting wood. Keep bystanders and animals out of the work area. Children, pets, and bystanders should be a minimum of 30 feet (10 m) away when you start or operate the chainsaw.

9. Never start cutting until you have a clear work area, secure footing, and planned retreat path from the falling tree. Always keep proper footing and operate the chainsaw only when standing on a fixed, secure, and level surface.

10. A chainsaw is intended for two-handed use. Do not operate a chainsaw with one hand! Serious injury to the operator, helpers, bystanders, or any combination of these persons may result from one-handed operation. Always hold the chainsaw firmly with both hands when the engine is running. Use a firm grip with thumb and fingers encircling the chainsaw handles.

11. Keep all parts of your body away from the saw chain when the engine is running. Before you start the engine, make sure the saw chain is not contacting anything.

12. Always carry the chainsaw with the engine stopped, the guide bar and saw chain to the rear, and the muffler away from your body.

3. For safe operation

13. Always inspect the chainsaw before each use for worn, loose, or changed parts. Never operate a chainsaw that is damaged, improperly adjusted, or is not completely and securely assembled. Be sure that the saw chain stops moving when the throttle control trigger is released.

14. Contact PRORUN Customer Service for any questions or issues concerning this machine or its operation. All chainsaw services, other than the items listed in the Operator's Manual, should be performed by a PRORUN approved maintenance service center.

15. Always shut off the engine before setting it down.

16. Use extreme caution when cutting small size brush and saplings because slender material may catch the saw chain and be whipped toward you or pull you off balance.

17. When cutting a limb that is under tension, be alert for spring back so that you will not be struck when the tension in the wood fibers is released.

18. Keep the handles dry, clean, and free of oil or fuel mixture.

19. Guard against kickback. Kickback is the upward motion of the guide bar which occurs when the saw chain at the nose of the guide bar contacts an object. Kickback can lead to dangerous loss of control of the chainsaw.

20. When transporting and storing your chainsaw, make sure the appropriate guide bar scabbard is in place. Securely place the machine during transport to prevent loss of fuel, damage, or injury.

21. Apply only light pressure and run the engine at full throttle while using chainsaw in order to avoid blockage of saw occurring in wood.

KICKBACK SAFETY PRECAUTIONS FOR CHAINSAW USERS

⚠WARNING

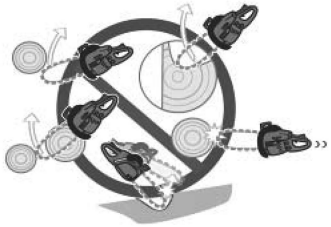

Kickback may occur when the nose or tip of the guide bar touches an object, or when the wood closes in and pinches the saw chain in the cut. Tip contact in some cases may cause a lightning fast reverse reaction, kicking the guide bar up and back towards the operator. Pinching the saw chain along the top of the guide bar may push the guide bar rapidly back towards the operator. Either of these reactions may cause you to lose control of the saw which could result in serious personal injury.

● Do not rely exclusively on the safety devices built into your saw. As a chainsaw user you should take several steps to keep cutting jobs free from accident or injury.

(1) With a basic understanding of kickback, you can reduce or eliminate the element of surprise. Sudden surprise contributes to accidents.









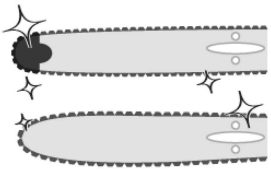

(2) Keep a good grip on the saw with both hands, the right hand on the rear handle, and the left hand on the front handle, when the engine is running. Use a firm grip with thumbs and fingers encircling the chainsaw handles. A firm grip will help you reduce kickback and maintain control of the saw. Don't let go.

(3) Make certain that the area in which you're cutting is free from obstructions. Do not let the nose of the guide bar contact a log, branch, or any other obstruction which could be hit while you are operating the saw.

(4) Cut at high engine speeds.

(5) Do not overreach or cut above shoulder height.

(6) Follow manufacturers sharpening and maintenance instructions for saw chain.

(7) Only use replacement bars and chains specified by the manufacturer or the equivalent.

4. Installing guide bar and saw chain

⚠WARNING

The saw chain has very sharp edges. Use protective gloves for safety. Make sure the engine is stopped before guide bar and saw chain adjustments.

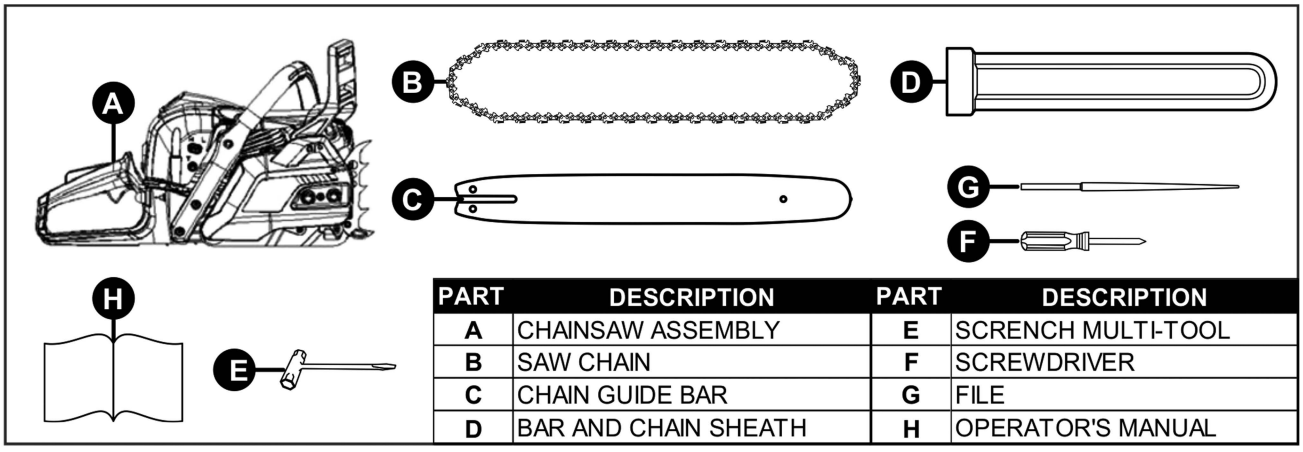

PART	DESCRIPTION	PART	DESCRIPTION
A	CHAINSAW ASSEMBLY	E	SCRENCH MULTI-TOOL
B	SAW CHAIN	F	SCREWDRIVER
C	CHAIN GUIDE BAR	G	FILE
D	BAR AND CHAIN SHEATH	H	OPERATOR'S MANUAL

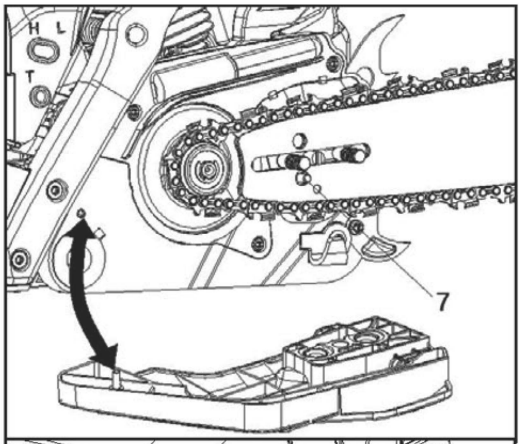

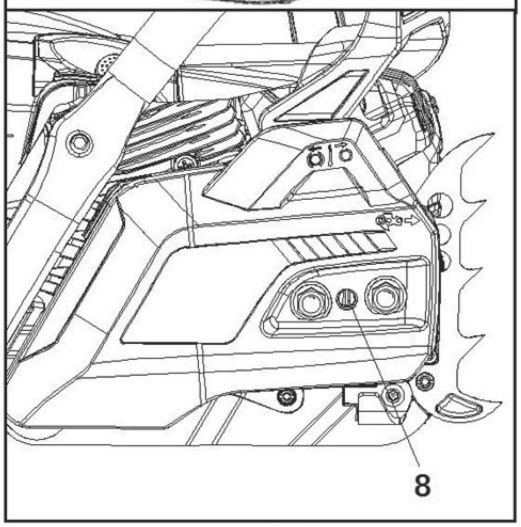

Open the box and install the guide bar and the saw chain on the power unit as follows.

1. Pull the front hand guard towards the front handle to check that the chain brake is not on.

2. Loosen two nuts and remove the clutch cover.

3. Mount the guide bar to the power unit, while inserting the chain tensioner nut into the lower hole of the guide bar. Gear the chain to the sprocket and, while fitting the saw chain around the guide bar, install the clutch cover and fasten two nuts to finger tightness.

(7) Chain tensioner nut

(8) Chain tensioner screw

NOTE

Pay attention to the correct direction of the saw chain.

(1)Moving direction

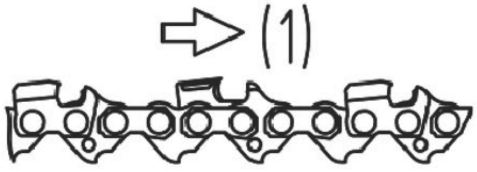

4. Installing guide bar and saw chain

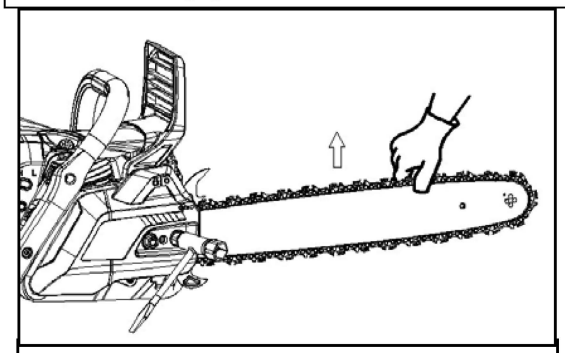

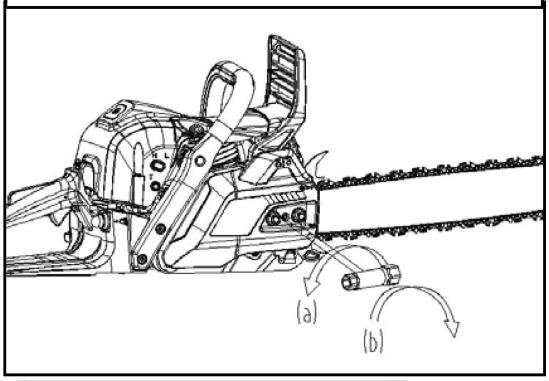

6. While holding up the tip of the bar, adjust the chain tension by turning the tensioner screw until the tie straps just touch the bottom side of the bar rail.

7. Tighten the nuts securely with the bar tip held up (12 ~ 15 Nm). Then check the chain for smooth rotation and proper tension while moving it by hand. If necessary, readjust with the chain cover loose.

8. Adjust the chain tensioner screw.

(a) Turn counterclockwise: Loosen the chain

(b) Turn clockwise: Tighten the chain

IMPORTANT

It is very important to maintain the proper chain tension. Rapid wear of the guide bar or the chain coming off easily can be caused by improper tension. Especially when using a new chain, inspect regularly since it should expand when first used.

The Spiked bumper belongs to the chainsaw. It must be screwed onto the chainsaw before the initial use. Please fix the spiked bumper with two screws onto the forefront of the chainsaw.

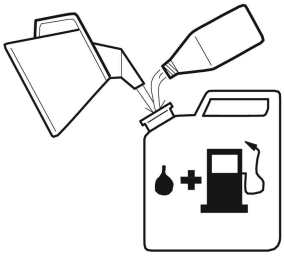

■Fuel

The engines are lubricated by oil specially formulated for air-cooled 2-cycle gasoline engine use. If oil is not available, use an antioxidant added quality oil expressly labeled for air-cooled 2-cycle engine use.

5. Fuel and chain oil

RECOMMENDED MIXING RATIO

GASOLINE 50 : OIL 1

These engines are certified to operate on unleaded gasoline.

■HOW TO MIX FUEL



⚠WARNING **To prevent serious injury from fire:** Fill the fuel tank in a well-ventilated area away from ignition sources. If the engine is hot from use, shut the engine off and wait for it to cool before adding fuel. Do not smoke.

1. Clean the Fuel Tank Cap and the area around it.
2. Unscrew and remove the Fuel Tank Cap.

Note: Do not use gasoline containing more than 10% ethanol (E10). Do not use E85 ethanol. Add fuel stabilizer to the gasoline or the Warranty is VOID.

Note: Do not use gasoline that has been stored in a metal fuel container or a dirty fuel container. It can cause particles to enter the carburetor, affecting engine performance and/or causing damage.

IMPORTANT: Your Warranty is VOID if the Engine's Fuel Tank is not filled with the proper mixture (50:1) of unleaded gasoline and 2-cycle oil before each use.

2-Stroke oil must meet either JASO M345 FD or ISO-L-EGD requirements for air-cooled engines, synthetic.

Before each use, check the fuel level. Do not run the Engine with an improper unleaded gasoline/2‑cycle oil mixture. Running the Engine with an improper mixture WILL permanently damage the Engine.

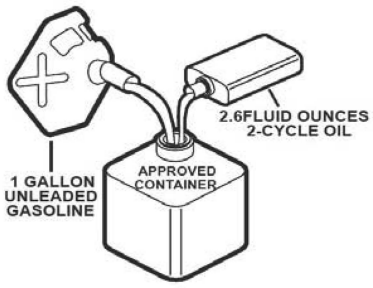

3.To obtain the proper gasoline and 2-cycle oil mixture, mix 2.6 fluid ounces of 2-cycle oil with 1 gallon of unleaded gasoline into an approved container. Then gently agitate the container to thoroughly mix the gasoline/2-cycle oil.

4.If needed, fill the Fuel Tank to about 1 inch under the fill neck of the Fuel Tank with the pre‑mixed unleaded gasoline/2-cycle oil mixture.

5.Then replace the Fuel Tank Cap.

6.Wipe up any spilled fuel and allow excess to evaporate before starting engine. To prevent FIRE, do not start the engine while the smell of fuel hangs in the air.

7. Use caution when handling fuel. Move the chainsaw at least 10 feet (3 m) from

the fueling point before starting the engine.

■ CHAIN OIL

Use special chain saw oil all year round.

NOTE

Do not use waste or regenerated oil that can cause damage to the oil pump.

6. Operation

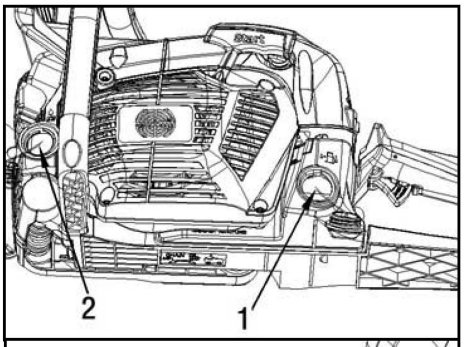

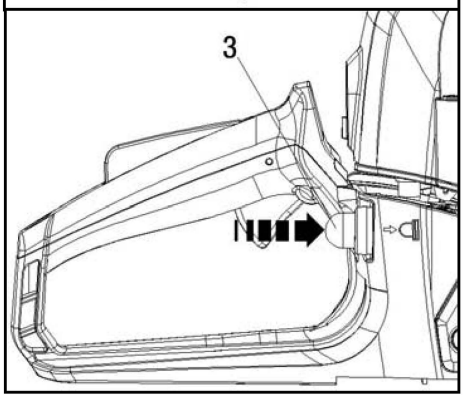

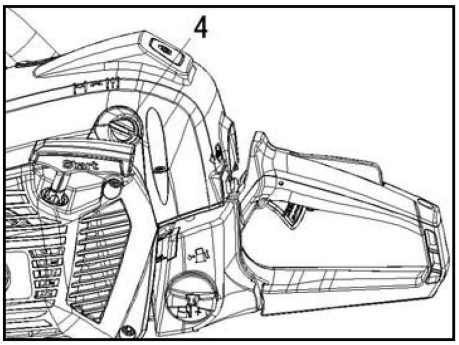

■ STARTING ENGINE

Cold starting: A “cold” start of the engine means starting it after at least 10 minutes from when it was switched off or after refueling.

1. Untwist the fuel cap and oil cap thoroughly, but don’t remove them from machine, just hang up them.
2. Put fuel and oil into the fuel tank and the oil tank to 80% of the full capacity.
3. Fasten two caps securely and wipe up any fuel spillage around the unit.
4. Continuously push the priming bulb until fuel comes in the bulb.

(1) Fuel tank opening (2) Oil tank opening
(3) Primer bulb (4) Choke knob

5. Pull out the choke knob. The choke will close and the throttle lever will then be set in the starting position.

NOTE

When restarting immediately after stopping the engine set choke in the open position.

6. Push the front handle guard down toward the front to activate the chain brake.
7. While holding the chainsaw securely on the ground, Grip the starter handle, slowly pull out the cord with your right hand until you feel some resistance (the starter pawls grip), and now quickly and powerfully pull the cord. **Never twist the starter cord around your hand.**

6. Operation

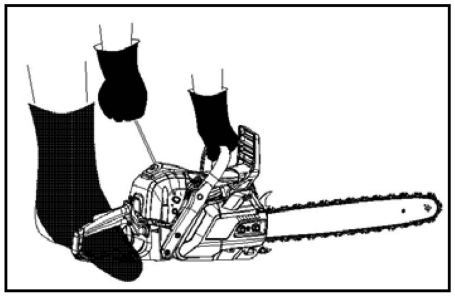

8. When first firing occurs, turn the choke knob counterclockwise to open the choke.

Note: setting the choke manually can temporarily set the throttle in a partially open position to aid starting.

9. Hold the chainsaw securely on the ground, and repeat pulling the cord until the engine starts.

10. Pull up the front handle guard toward the front handle to release the brake. Then, allow the engine to warm up with the trigger pulled slightly.

⚠WARNING

Before you start the engine, make sure the saw chain is not contacting anything. Make sure the chain brake is always activated before each starting.

Hot starting:

To hot start the engine immediately after it has stopped, follow steps 1 – 2 – 3 – 4 – 6– 9 – 10 of the above procedure, making sure the primer bulb is activated 2-3 times only.

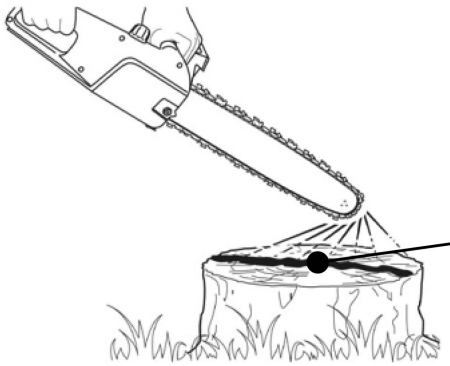

■CHECKING OIL SUPPLY

After starting the engine, run the chain at medium speed and see if chain oil is scattered off as shown in the figure.

Chain oil

The chain oil flow can be changed by inserting a screwdriver in the hole on bottom of the clutch side. Adjust according to your work conditions.

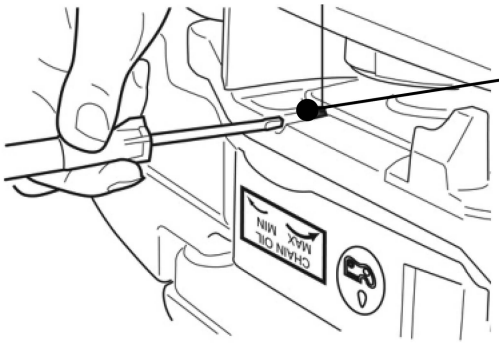

Chain oil flow adjusting shaft

Turn the shaft clockwise – Flow rich

Turn the shaft counterclockwise – Flow lean

IMPORTANT

The oil tank should become nearly empty by the time fuel is used up. Be sure to refill the oil tank every time when refueling the saw.

6. Operation

■CHECKING FUNCTIONALITY OF THE CLUTCH

Before each use, you should confirm that there is no chain movement when the chain saw is running at idling speed.

■ ADJUSTING CARBURETOR

The carburetor on your unit has been factory adjusted but may require fine tuning due to change in operating conditions. If the carburetor needs to be adjusted, contact PRORUN Customer Service for assistance. Don't adjust it by yourself without proper instructions. Before adjusting the carburetor, make sure that air/fuel filters are clean and fresh, and fuel is properly mixed.

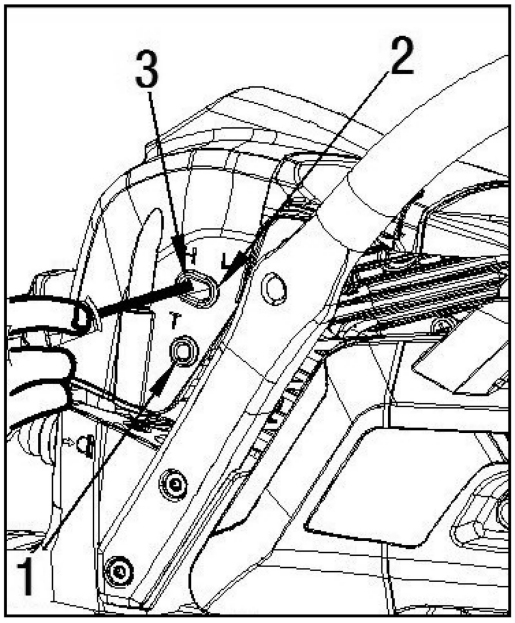

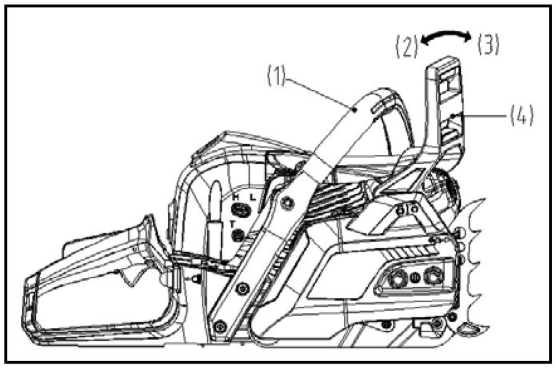

When adjusting, take the following steps:

IMPORTANT

Be sure to adjust the carburetor with the bar chain attached.

1. H and L needles are restricted within the number of turn as shown below.

H needle –1/4 L needle –1/4

2. Start engine and allow it to warm up at a low speed for a few minutes.
3. Turn idle adjusting screw (T) counterclockwise so that saw chain does not turn. If idling speed is too slow, turn the screw clockwise.
4. Make a test cut and adjust the H needle for best cutting power, not for maximum speed.

(1) Idle adjusting screw (2) L needle

(3) H needle

■CHAIN BRAKE

The chain brake is a device which stops the chain

instantaneously if the chainsaw recoils due to kickback.

(1) Front handle (2) Release

(3) Brake (4) Front handle guard

Normally, the brake is activated automatically by inertial force. It can also be activated manually by pushing the brake lever (Front handle guard) down toward the front.
When the brake operates, a white cone is visible at the base of the brake lever.

6. Operation

To release brake, pull up the front handle guard toward the front handle till “click” sound is heard.

⚠WARNING

When the brake operates, release the throttle trigger to slow down the engine speed. Continuous operation with the brake engaged will generate heat from the clutch and may cause trouble.
Be sure to confirm brake operation on the daily inspection.

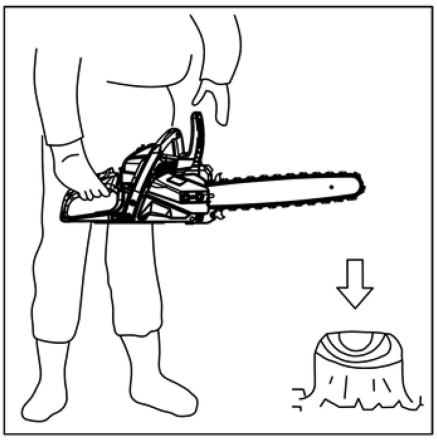

How to confirm:

1) Turn off the engine.
2) Holding the chainsaw horizontally, release your hand from the front handle, hit the tip of the guide bar to a stump or a piece of wood, and confirm brake operation. Operating level varies by bar size.
In case the brake is not effective, contact PRORUN Customer Service.

• CARBURETOR ANTI-FREEZE MECHANISM

Operating chain saws in temperatures of 32° - 41° F (0° - 5° C) during times of high humidity may result in ice forming within the carburetor, and this may cause the output power of the engine to be reduced or for the engine to fail to operate smoothly.

This product has accordingly been designed with a ventilation hatch on the right side of the surface of the cylinder cover to allow warm air to be supplied to the engine and to thereby prevent icing from occurring.

Under normal circumstances the product should be used in the normal operating mode, i.e., in the mode which it is set at the time of shipment.
However, when the possibility exists that icing may occur, the unit should be set to operate in the anti-freeze mode before use.
Continuous use of the product in the anti-freeze mode even when temperatures have risen and returned to normal may result in the engine failing to start properly or in the engine failing to operate at its normal speed. For this reason, you should always be sure to return the unit to the normal operating mode if there is no danger of icing occurring.

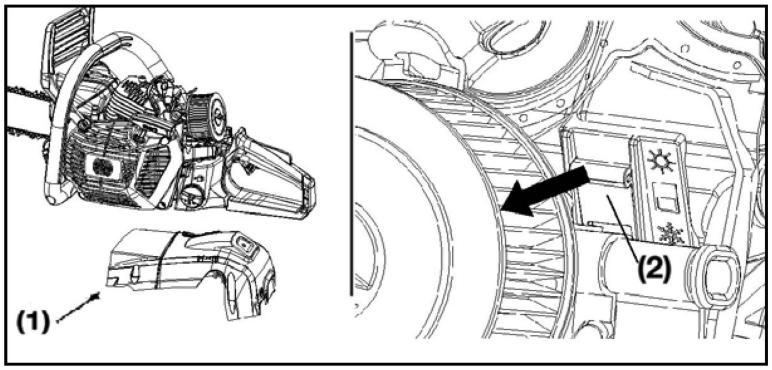

HOW TO SWITCH BETWEEN OPERATING MODES

(1) Cylinder cover
(2) Icing cap

1. Flip the engine switch to turn off the engine.
2. Remove the cover to the air filter, remove the air filter, and then remove the choke knob from the cylinder cover.
3. Loosen the screws holding the cylinder cover in place (i.e., the three screws on the inside and the one screw on the outside of the cover), and then remove the cylinder cover.
4. Press with your finger down on the icing cap located on the right-hand side of the cylinder cover to remove the icing cap.
5. Adjust the icing cap so that the “snow” mark faces upwards and then return it to its original position in the cylinder cover.
6. Fix the cylinder cover back into its original position, and then fix all other parts back into their proper positions.

■ Stopping engine

1. Release the throttle trigger to allow the engine idling for a few minutes.
2. Press down the “0” side of switch.

(1) Engine switch

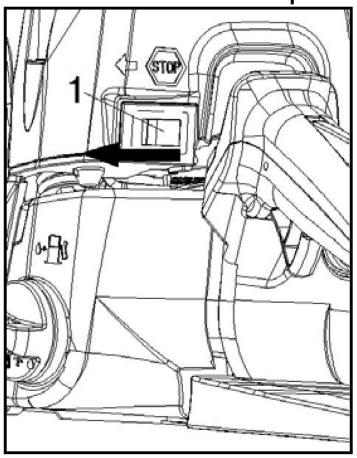

■ Decompression valve (if applicable)

After an extended period of use, the decompression valve may not close or come out due to the buildup of carbon inside of the valve mounting holes within the cylinder. To remove the carbon, take the following steps:

a) Remove air cleaner cover, cylinder cover, spark plug, and decompression valve from the engine.

1) Cylinder
2) Decompression valve
3) Spark plug

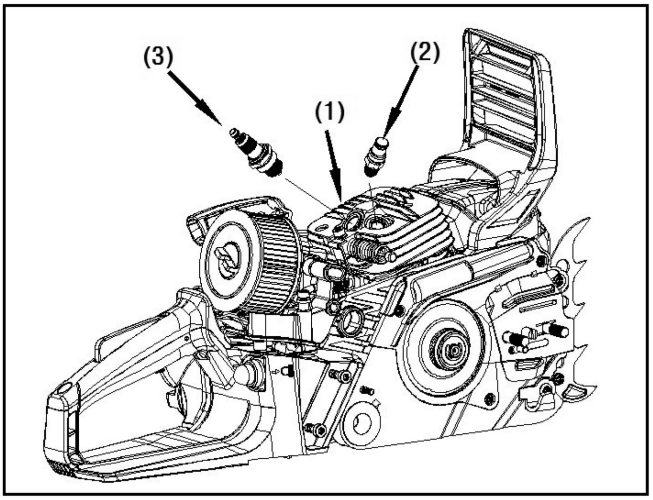

b) Clean the electrodes with a wire brush. While viewing through the spark plug hole, crank down the piston to the lowest position by pull ing recoil starter slowly.

c) Prepare diameter 2.0 -2.3 mm (0.08 – 0.09 inch) drill bit.

d) Lay down the engine facing the valve mounting hole downward so that the remove d carbon will not drop into cylinder.

e) Insert the drill bit into the hole turning slowing so that the bit will scrape off the buildup carbon.

f) Make sure to remove the drill bit and pull recoil starter several times.

Reinstall the disassembled parts.

7. Sawing

⚠WARNING

Before proceeding to your job, read the "For Safe Operation" section. It is recommended to first practice sawing easy logs. This also helps you get accustomed to your unit.



Always follow all the safety regulations for use of the machine. The chainsaw must only be used for cutting wood. It is forbidden to cut other types of material. Vibrations and kickback vary with different materials and the requirements of the safety regulations would not be respected. Do not use the chain saw as a lever for lifting, moving, or splitting objects. Do not lock it over fixed stands. It is forbidden to hitch tools or applications to the P.T.O. that are not specified by the manufacturer.

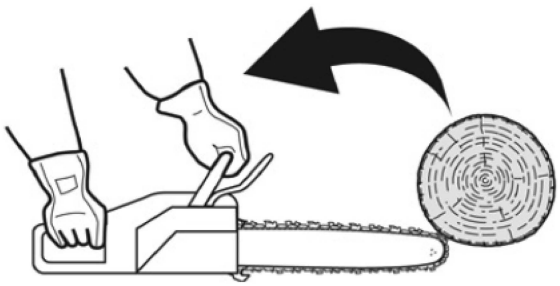

It is not necessary to force the saw into the cut. Apply only light pressure while running the engine at full throttle.

It is recommended to conduct daily inspections before use and after dropping or other impacts to identify significant damage or defects.

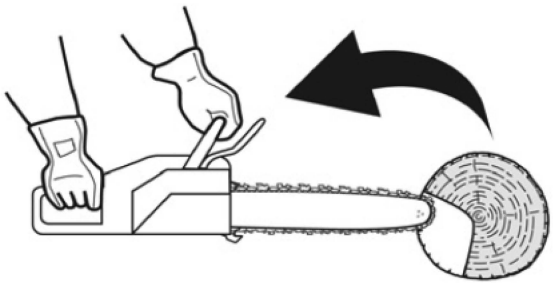

Racing the engine with the chain seized in a cutaway can damage the clutch system. When the saw chain is caught in the cut, do not attempt to pull it out by force, but use a wedge or a lever to open the cut.

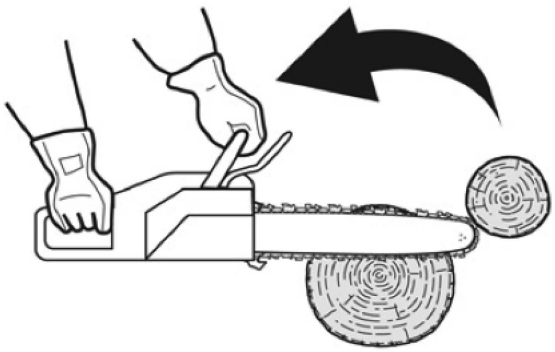

■ **Guard against kickback**

This saw is also equipped with a chain brake that will stop the chain in the event of kickback if operating properly. You must check the chain brake operation

before each usage by running the saw at full throttle for 1 or 2 seconds and pushing the front hand guard forward. The chain should stop immediately with the engine at full speed. If the chain is slow to stop or does not stop, contact PRORUN Customer Service before use.



It is extremely important that the chain brake be checked for proper operation before each use and that the chain be sharp in order to maintain the kickback safety level of this saw. Removal of the safety devices, inadequate maintenance, or incorrect replacement of the bar or chain may increase the risk of serious personal injury due to kickback.

■ **Felling a tree**

1. Decide the felling direction considering the wind, lean of the tree, location of heavy branches, ease of job after felling, and other factors .
2. While clearing the area around the tree, arrange a good foothold and retreat path.
3. Make a notch cut one-third of the way into the tree on the felling side.
4. Make a felling cut from the opposite side of the notch and at a level slightly higher than the bottom of the notch.

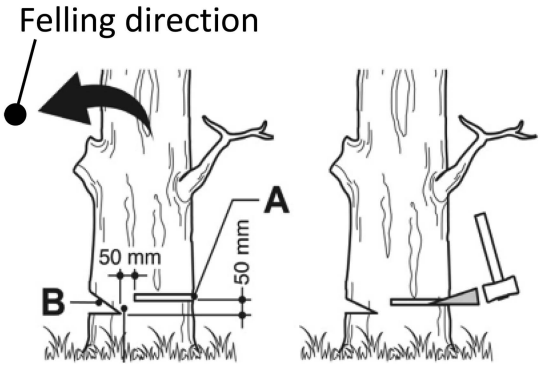

⚠WARNING

When you fell a tree, be sure to warn your neighboring workers of the danger.

(A) Felling cut

(B) Notch cuts

7. Sawing

■LOGGING AND LIMBING

⚠WARNING

1. Always ensure your foothold as well as the stability of the tree.
2. Be alert to the rolling over of a cut log.
3. Read the instructions in “For Safe Operation” to avoid kickback of the saw.

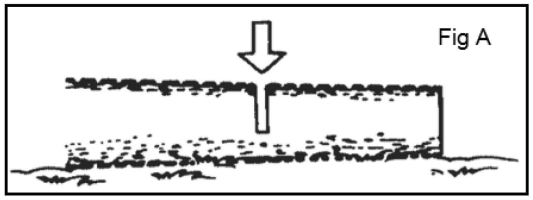

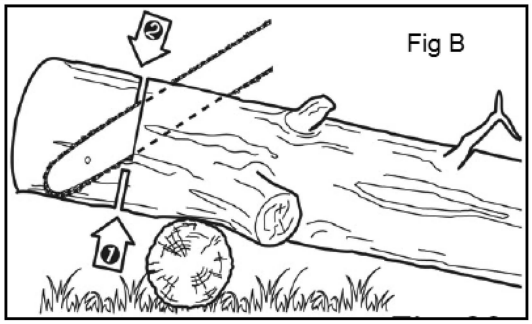

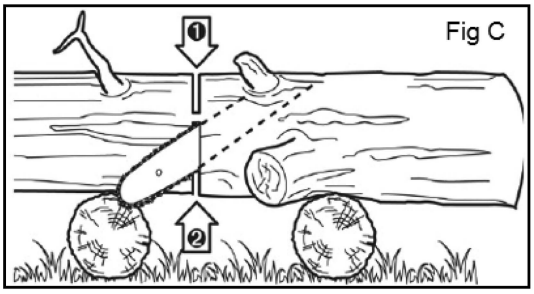

Before starting work, check the direction of bending force inside the log to be cut.

Always finish cutting from the opposite side of bending direction to prevent the guide bar from being caught in the cutaway.

Cutting an unsupported log (Fig A)

Saw down halfway, then roll the log over and cut from the opposite side.

Cutting a supported log

When log is supported as in Fig B, saw up from the bottom one-third and finish by sawing down from the top.

When log is supported as in Fig C, saw down from the top one-third and finish by sawing up from the bottom.

Limbing a felled tree

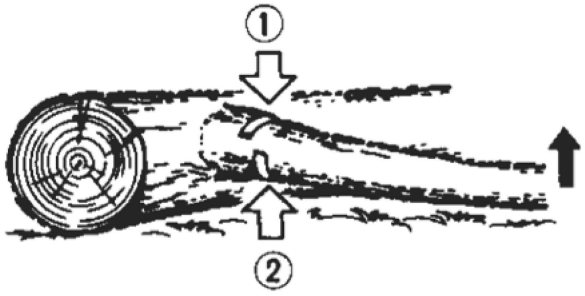

First check which way the limb is bent. Then make a shallow cut into the compressed side to prevent the limb from being torn. Cut through from the tensed side.

⚠WARNING

Be alert to the spring back of a cut limb.

7. Sawing

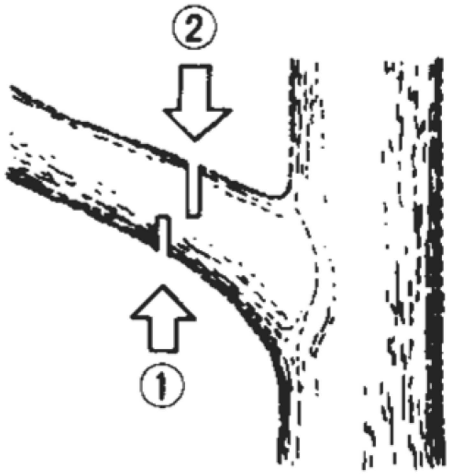

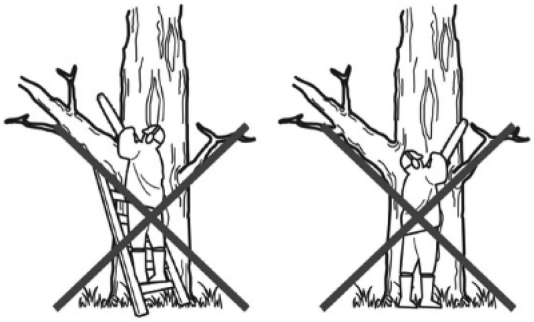

Pruning

Cut up from the bottom, finish down from the top.

⚠WARNING

1. Do not use an unstable foothold or a stepladder.
2. Do not overreach.
3. Do not cut above shoulder height.
4. Always use both hands to grip the saw.

⚠WARNING

The Spiked bumper must always be installed when using the chainsaw on tree trunk. Push the spiked bumper into the tree trunk by using the rear handle. Push the front handle in the direction of cutting line. The spiked bumper should remain set for future guiding if necessary. Use of a spiked bumper when cutting trees and thick branches can ensure your safety, decrease the working effort, and reduce vibration level.

If there is a barrier between the cutting material and chainsaw, turn off the machine. Wait until it stops completely. Wear safety gloves and remove the barrier. If the chain must be removed, the instructions within. A trial run must be conducted after cleaning and new installation. If vibration or mechanical noise is discovered, please stop the machine and contact PRORUN Customer Service.

8. Maintenance

⚠WARNING

Before cleaning, inspecting, or repairing your unit, make sure that the engine has stopped and is cool. Disconnect the spark plug to prevent accidental starting.

Follow the instructions to carry out regular maintenance, pre-operating procedures, and daily maintenance routines. Improper maintenance may result in serious damage to the machine.

Keep your chainsaw in good working condition always.

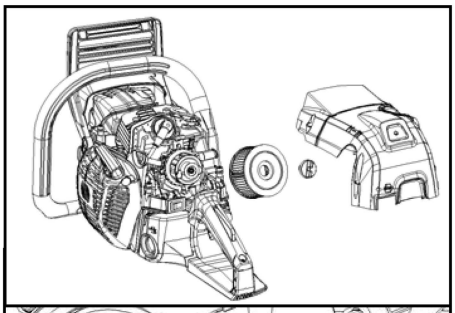

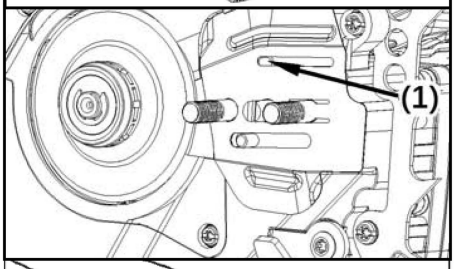

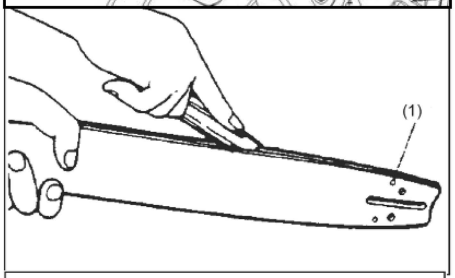

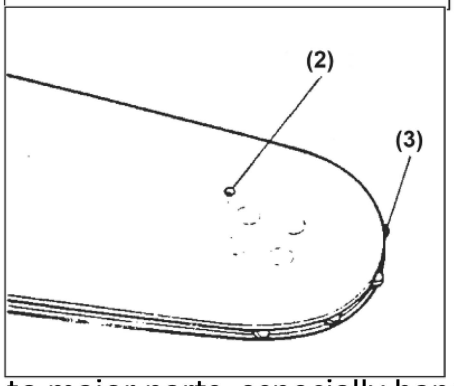

■ Maintenance after each use

1. Air filter

Dust on the air filter surface can be removed by tapping a corner of the filter against a hard surface. To clean dirt in the meshes, split the filter into halves and brush in gasoline. When using compressed air, blow from the inside.

To assemble the filter halves, press the rim until it clicks.

2. Oiling port

Dismount the guide bar and check the oiling port for clogging.

(1) Oiling port

3. Guide bar

When the guide bar is dismounted, remove sawdust in the bar groove and the oiling port.

Grease the nose sprocket from the feeding port on the tip of the bar.

(1) Oiling port

(2) Grease port

(3) Sprocket

4. Others

Check for fuel leakage and loose fastenings and damage to major parts, especially handle joints and guide bar mounting. If any defects are found, make sure to have them repaired before operating again.

■Periodical service points

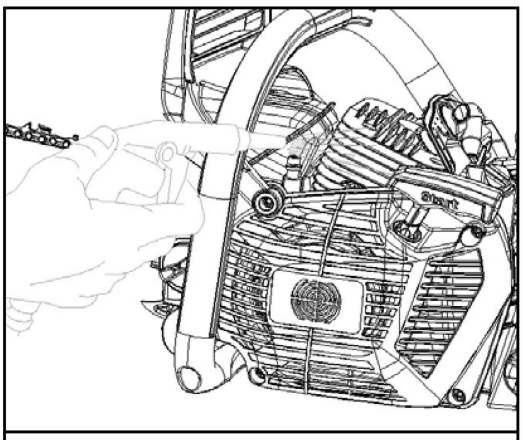

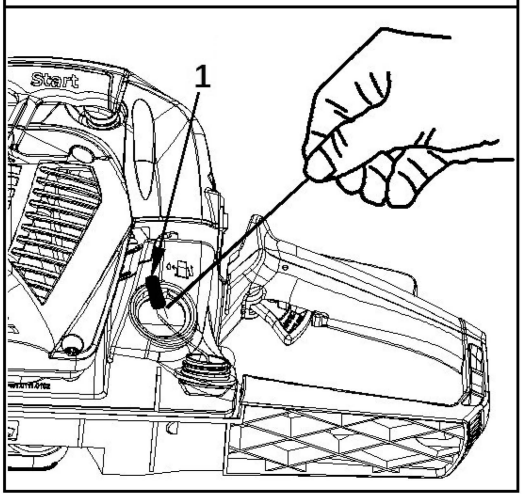

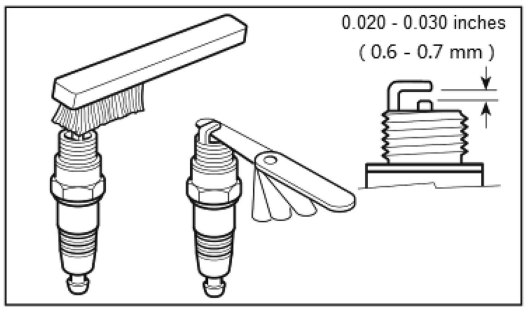

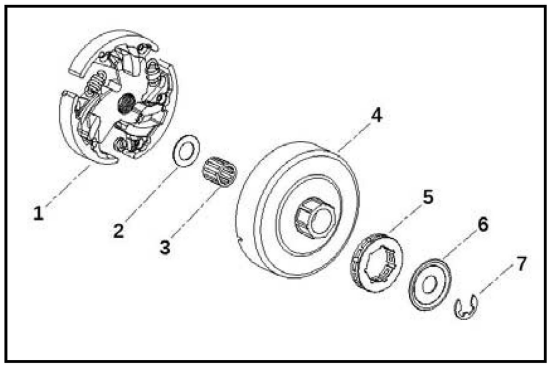

1. Cylinder fins

Dust clogging between the cylinder fins will cause overheating of the engine. Periodically check and clean the cylinder fins after removing the air cleaner and the cylinder cover. When installing the cylinder cover, make sure that switch wires and grommets are positioned correctly in place.

2. Fuel filter

(a) Using a wire hook, take out the filter from the filler port.

(1) Fuel filter

(b) Disassemble the filter and wash with gasoline or replace with a new one if needed.

IMPORTANT

• After removing the filter, use a pinch to hold the end of the suction pipe.

• When assembling the filter, take care not to allow filter fibers or dust inside the suction pipe.

3. Spark plug

Clean the electrodes with a wire brush and reset the gap to 0.20 – 0.30 inches (0.6-0.7 mm) as necessary.

Spark plug type： TORCH L7RTC / CHAMPION RCJ7Y / BOSCH L8RTF / NGK BPMR7A

4. Sprocket

Check for cracks and for excessive wear interfering with the chain drive. If the wear is considerable, replace it with new one. Never fit a new chain on a worn sprocket, or a worn chain on a new sprocket.

(1) Clutch block (2) Washer (3) Needle bearing

(4) Clutch drum (5) Sprocket (6) Washer

(7)Clip spring

8. Maintenance

5. Front and Rear absorber spring

Replace if spring is deformed.

Use only the spare parts which are listed in this manual. Use of unauthorized spare parts can cause serious injury.

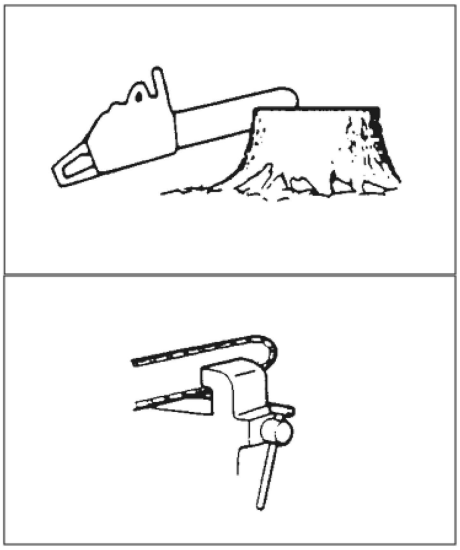

■ **Saw chain**

⚠WARNING

It is very important for smooth and safe operation to always keep the cutters sharp.

Your cutters need to be sharpened when:

- Sawdust becomes powder-like.
- You need extra force to saw in.
- The cut way does not go straight.
- Vibration increases.
- Fuel consumption increases.

Cutter setting standards:

⚠WARNING

Be sure to wear safety gloves.

Before filing:

- Make sure the saw chain is held securely.
- Make sure the engine is stopped.
- Use a round file of proper size for your chain.

Chain type: Oregon 95TXL

File size: 3/16 inch (4.8mm)

Place your file on the cutter and push straight forward.

Keep the file position as illustrated.

After every cutter has been set, check the depth gauge, and file it to the proper level as illustrated.

Be sure to round off the front edge to reduce the chance of kickback or tie-strap breakage.

9. Maintenance of Saw Chain and Guide Bar

Make sure every cutter has the same length and edge angles as illustrated.

Do not to use a replacement saw chain unless it has been designated as meeting the kickback performance requirements in ANSI/OPEI B175.1-2012 or has been designated as low kickback replacement saw chain in accordance with ANSI/OPEI B175.1-2012.

Type of chain	File diameter	Top plate angle	Down angle	Head tilt angle (55°)	Depth gauge standard
	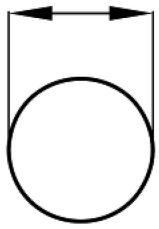	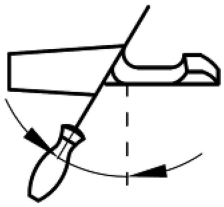	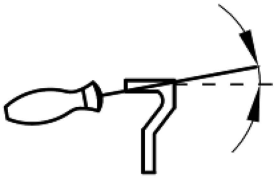	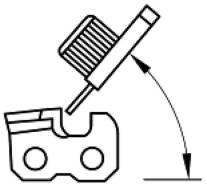	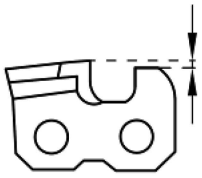
		Vise rotate angle	Vise tilt angle	Side angle	
		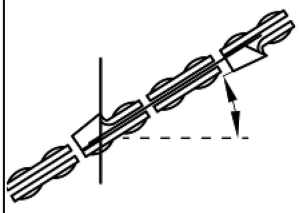		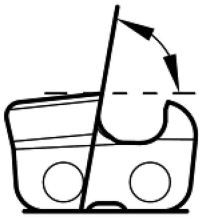	
95TXL	3/16 inch	35°	10°	70°	0.050 inch
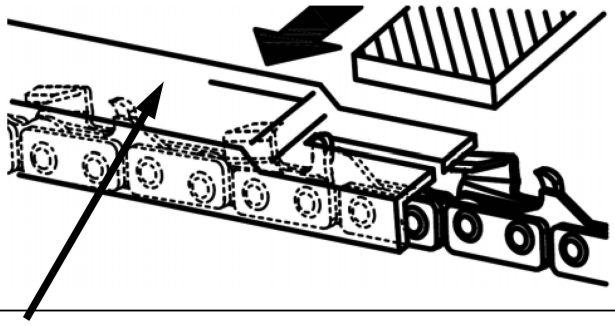				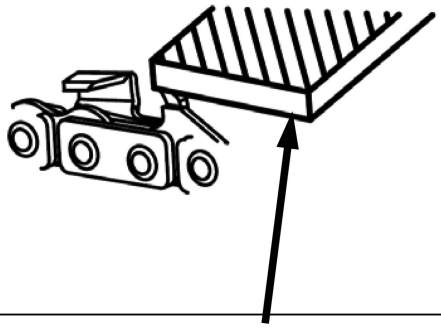	
Depth gauge				File	

9. Maintenance of Saw Chain and Guide Bar

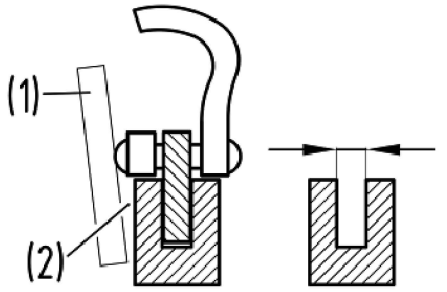

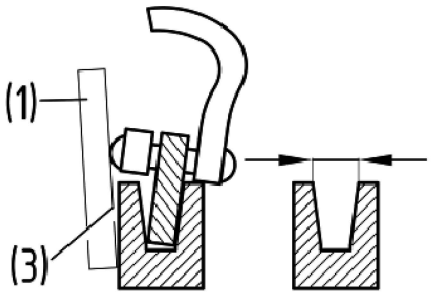

WARNING

Guide bar

- Reverse the bar occasionally to prevent partial wear.
- The bar rail should always be a square. Check for wear of the bar rail. Apply a ruler to the bar and the outside of a cutter. If a gap is observed between them, the rail is normal. Otherwise, the bar rail is worn. Such a bar needs to be corrected or replaced.

(1) Ruler (2) Gap (3) No gap (4) Chain tilts

The table contains a list of all possible combinations between bar and chain, indicating those which may be used on each machine, marked with the symbol “*”.

Pitch	Guide bar				Chain		Chain saw model
Zoll	Length Inches/cm	Groove width Inches/mm	Code	Number of nose teeth	Code	Number of drive links	PCS560C
0.325 inch	20 inches (50cm)	0.050 inch (1.3mm)	Oregon 200TXLBK095	10	Oregon 95TXL078X	78	*

For replacement, use only the above specified bars and chains. The use of non-approved combinations may cause serious personal injury and damage to the machine.

10. Storage

1. Empty the fuel tank and run the engine out of fuel.
2. Empty the oil tank.
3. Clean and maintain the entire unit.
4. Store the unit in a dry place out of the reach of children.
5. When storing or transporting your chain saw, use the appropriate guide-bar cover.

11. Waste disposal and environmental protection

Never pour remainders of chain lubricant or 2-stroke fuel mixture in the drain or sewerage system or soil. Dispose of it in a proper, environmentally friendly way, e.g., at a special collecting point or dump.

If your device should become useless somewhere in the future or you do not need it any longer, do not dispose of the device together with your domestic refuse, but dispose of it in an environmentally friendly manner. Thoroughly empty the oil/lubricant and fuel tanks and dispose of the remainders at a special collecting point or dump. Please dispose of the device at an official collecting/recycling point. Information concerning the disposal of materials and devices are available from your local administration.

12. Troubleshooting guide

PROBLEM	CAUSE	REMEDY
1) Starting failure	– Check fuel for water or substandard mixture.	– Replace with proper fuel.
	– Check for engine flooding.	– Remove and dry the spark plug. – Then pull the starter again, with no choke.
	– Check spark ignition.	– Replace with a new plug.
2) Lack of power/Poor acceleration/ Rough idling	– Check fuel for water or substandard mixture.	– Replace with proper fuel.
	– Check air filter and fuel filter for clogging.	– Clean.
	– Check carburetor for inadequate adjustment.	– Readjust speed needles.
3) Oil does not come out	– Check oil for substandard quality.	– Replace.
	– Check oil passage and ports for clogging.	– Clean.

If the unit requires further service, please contact PRORUN Customer Service.

13. Specifications	
Power unit:	PCS560C
Displacement:	55.5 cc
Maximum engine power:	3.2 HP / 2.4 kW
Fuel:	Mixture (Unleaded Gasoline 50: two-cycle oil 1)
Fuel tank capacity:	17.25 oz. (510cm^3)
Chain oil:	Engine oil SAE#10W-30
Oil tank capacity:	9.8 oz. (290cm^3)
Carburetor:	Diaphragm type
Fuel consumption at maximum engine power:	500 g/kw·h
Idling speed range:	3000±400 min^{-1}
Maximum speed with cutting attachment:	13000 min^{-1}
Maximum Chain speed:	55.9 MPH (25m/s)
Ignition system:	C.D.I. with timing advance function
Spark plug:	CHAMPION RCJ7Y/ TORCH L7RTC/NGK BPMR7A/BOSCH L8RTF
Oil feeding system:	Mechanical plunger pump with adjuster
Sprocket Teeth x Pitch:	7T X 0.325 inch (8.255 mm)
Dimensions (L x W x H):	18.5 X 9.6 X 11.4 inches (470 X 245 X 290 mm)
Dry weight (without guide bar and chain, empty tanks):	12.68 Lbs. (5.75 kg)
Sound pressure level at operation position (EN ISO 22868) L_{pA}:	100.3 dB(A)
Uncertainty of stated value (2006/42EC) K_{pA}:	3.0 dB(A)
Sound power level (EN ISO 22868) L_{WA}:	113.2 dB(A)
Uncertainty of stated value (2006/42EC) K_{WA}:	3.0 dB(A)
Declared sound power level L_{WAd}	116 dB(A)

Vibration Value (EN ISO 22867):	
Front handle:	4.43m/s^2
Rear handle:	4.38m/s^2
Uncertainty of stated value (2006/42EC):	1.5 m/s^2
Cutting head:	
Guide bar	
Type:	Sprocket nose
Size:	20 inches
Cutting length:	20 inches (50cm)
Saw chain	
Type:	
Pitch:	0.325 inch (8.255 mm)
Gauge:	0.050 inch (1.3 mm)

Combinations of guide bar/ saw chain:200TXLBK095+95TXL078X
specifications are subject to change without notice.

Parts List and Diagram

Part List for Engine

No.	Description	Qty
1	Screw M5x16	3
2	Starter Unit	1
3	Starter Handle	1
4	Pull Cord Sheath	1
5	Starter Pull Cord	1
6	Starter Cover	1
7	Bossing	1
8	Self-Tapping Screw ST4.2x14	2
9	Easily Actuated Coil Spring	1
10	Easily Actuated Coil Spring Cover	1
11	Starter Plate	1
12	Easy Start-Coil Spring	1
13	Easy Start-Coil Spring Cover	1
14	Washer 5.2x15x1.5	1
15	Self-Tapping Screw ST4.8x14	1
16	Cover Unit	1
17	Cover	1
18	Marking Plate	1
19	Cover Liner	3
20	Cover Screw Assembly	3
21	Reducing Valve Protective Shield	1
22	Anti-Vibration Cap	1
23	Idling Speed Adjust Guide Sleeve	1
24	Cover Heat Insulation Film	1
25	Screw M5x20	1
26	Handle Unit	1
27	Anti-Vibration Base 3	1
28	Anti-Vibration Rope 3	1
29	Anti-Vibration Spring 3	1
30	Teeth Shape Sponge	1
31	Handle	1
32	Anti-Vibration Spring 1	1
33	Anti-Vibration Base 1	1
34	Self-Tapping Screw ST6.3x32	4
35	Right Side Cover Assembly	1
36	Right Side Cover	1
37	Nut	2
38	Anti-Vibration 2 Assembly	1
39	Screw M4x14	1

No.	Description	Qty
40	Upper Anti-Vibration Base 2	1
41	Anti-Vibration Spring 2	1
42	Anti-Vibration Rope 2	1
43	Rope Sponge	1
44	Lower Anti-Vibration Base 2	1
45	Self-Tapping Screw ST4.8x16	1
46	Base Cover Plate	1
47	Oil Pump Pipe Protective Sleeve	1
48	Balancer Seat	1
49	Balancer Body Unit	1
50	Trigger Control Rack	1
51	Self-Tapping Screw ST4.2x22	1
52	Hander Cover	1
53	Limited Block	1
54	Cylinder Pin Φ3x25	1
55	Cable Accelerator	1
56	Oil Pump Pipe	1
57	Long Oil Nozzle	1
58	Limited Block	1
59	Trigger Spring	1
60	Trigger	1
61	Guide Pipe	1
62	Oil Bubble	1
63	Upper Fuel Pipe	1
64	Fuel Throttle	1
65	Lower Fuel Pipe	1
66	Spring	1
67	Fuel Filter Unit	1
68	Fuel Throttle Cap Assembly	1
69	Fuel Throttle Cap	1
70	O-Ring 24.7x3.55	1
71	Anti-Drop Plate	1
72	Base	1
73	Support Screw M5x16	1
74	Bar And Chain Assembly	1
75	Guide Bar Cover 20 Inch	1
76	Saw Chain 20 Inch	1
77	Guide Bar 20 Inch	1

Parts List and Diagram

Part List for Engine

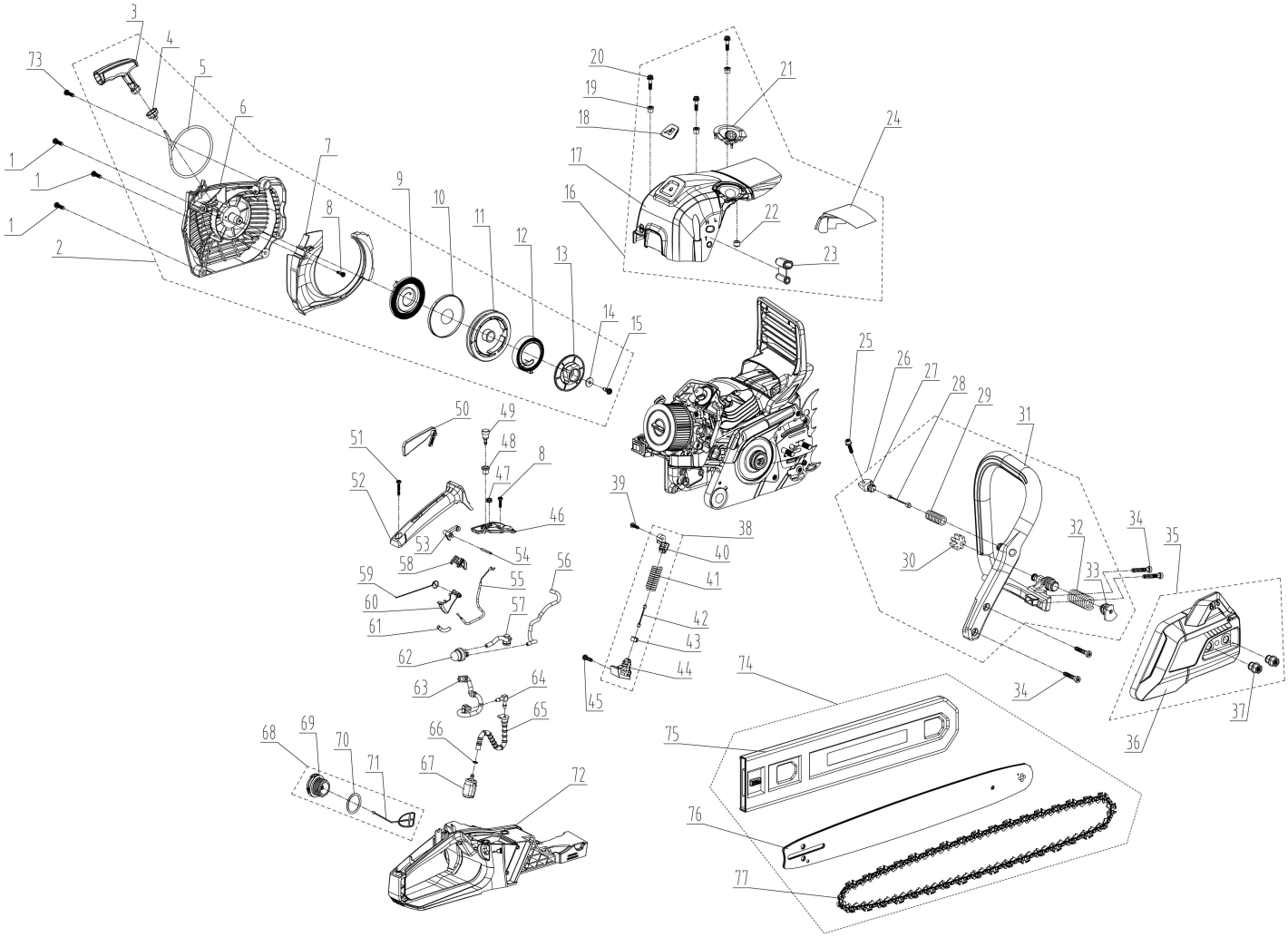

Parts List and Diagram

Part List

No.	Description	Qty
1	Bolt M8x1	1
2	Rotator Unit	1
3	Key 3x3.5x10	1
4	Screw M5x14	2
5	Blast Pipe	1
6	Screw M5x22	12
7	Igniter	1
8	Engine Stop Switch	1
9	Flameout Line	1
10	Ground Wire	1
11	Oil Port Cap Element	1
12	Oil Port Cap	1
13	Washer 22.4x3.55	1
14	Fuel Port Cap Retainer	1
15	Wire Protective Cover	1
16	Seal15x22x5	1
17	Throttle Cable Protective Cover	1
18	Crankcase LH	1
19	Anti-Vibration Washer	1
20	Bearing 6202	1
21	Cylinder Pin Φ4x10	2
22	Seal Washer	1
23	Crankshaft	1
24	Bearing	1
25	Crankcase RH Seal 20x30x5	1
26	Piston Pin Spring	2
27	Piston Pin	1
28	Retaining Ring	2
29	Needle Bearing Φ13 x Φ10x12.5	1
30	Piston	1
31	Piston Ring	2
32	Cylinder Gasket	1
33	Locating Sleeve	2
34	Upper Damper	1
35	Winter / Summer Conversion Board	1
36	Clapboard	1

No.	Description	Qty
37	Screw M4x14	4
38	Screw M4x12	6
39	Left Scavenging Cover	1
40	Spark Plug	1
41	Right Scavenging Cover	1
42	Seal	2
43	Cylinder	1
44	Reducing Valve	1
45	Muffler Sealing Plate	1
46	Muffler Sealing Plate	1
47	Screw M5x20	2
48	Pipe Plug	2
49	Muffler Cover	1
50	Screw M5x16	2
51	Screw M5x10	1
52	Right Case Body	1
53	Anti-Vibration Sponge	1
54	Oil Seal	1
55	Oil Tank Vent	1
56	Bolt M8x30-8.8	2
57	Oil Pipe	1
58	Oil Filter	1
59	Oil Filter Screen	1
60	Bumper Spikes	1
61	Screw M5x16	2
62	Support Sleeve	1
63	Oil Pump	1
64	Screw M4x12	2
65	Turbine Unit	1
66	Turbine	1
67	Turbine Lifting Lever	1
68	Chain Catcher	1
69	Self-Tapping Screw ST6.3x30	1
70	Clutch Gasket	1
71	Reset Device	1
72	Reset Spring	1

Parts List and Diagram

Part List

No.	Description	Qty
73	Reset Spring Base	1
74	Front Damper Assembly	1
75	Front Damper	1
76	Brake Strap Locating Pin Φ3×8	3
77	Front Damper Heat Insulation Film	1
78	Clutch Assembly	1
79	Clutch Shoe	3
80	Clutch Retaining Frame	1
81	Clutch Spring	3
82	Plain Washer Φ17.8 x Φ10.1x0.8	1
83	Needle Bearing 10×14×13	1
84	Brake Strap	1
85	Brake Spring Locating Pin Φ3×8	1
86	Front Damper Locating Pin	1
87	Hinge Bar Locating Pin	1
88	Hinge Bar	1
89	E Spring Φ5	2
90	Brake Spring	1
91	Brake Cover	1
92	Gear Seal 6x2	1
93	Tensioner Gear	1
94	Plastic Briquette Block	1
95	Screw M5x10	1
96	Clutch Shell	1
97	Chain Wheel	1
98	Small Anti-Abrasion Plate	1
99	E Spring Φ8	1

No.	Description	Qty
100	Tension Block	1
101	Tightener Screw	1
102	Limited Block	1
103	Guide Pad	1
104	Liner	1
105	Air Intake Pipe	1
106	Screw M4x14	3
107	Carburetor Base	1
108	Support Pad	1
109	Retaining Ring	1
110	Plastic Line	1
111	Carburetor Sealing Plate	1
112	Plastic Line	1
113	Carburetor	1
114	Throttle Base	1
115	Throttle Rod	1
116	Limited Block	1
117	Air Intake Base	1
118	Buffer	2
119	Air Filter Holder	1
120	Nut M5	2
121	Air Filter	1
122	Rotary Knob Washer	1
123	Rotary Knob	1
124	Case Heat Insulation Film	1
125	Self-Tapping Screw ST4.2x14	2

Parts List and Diagram

Part List

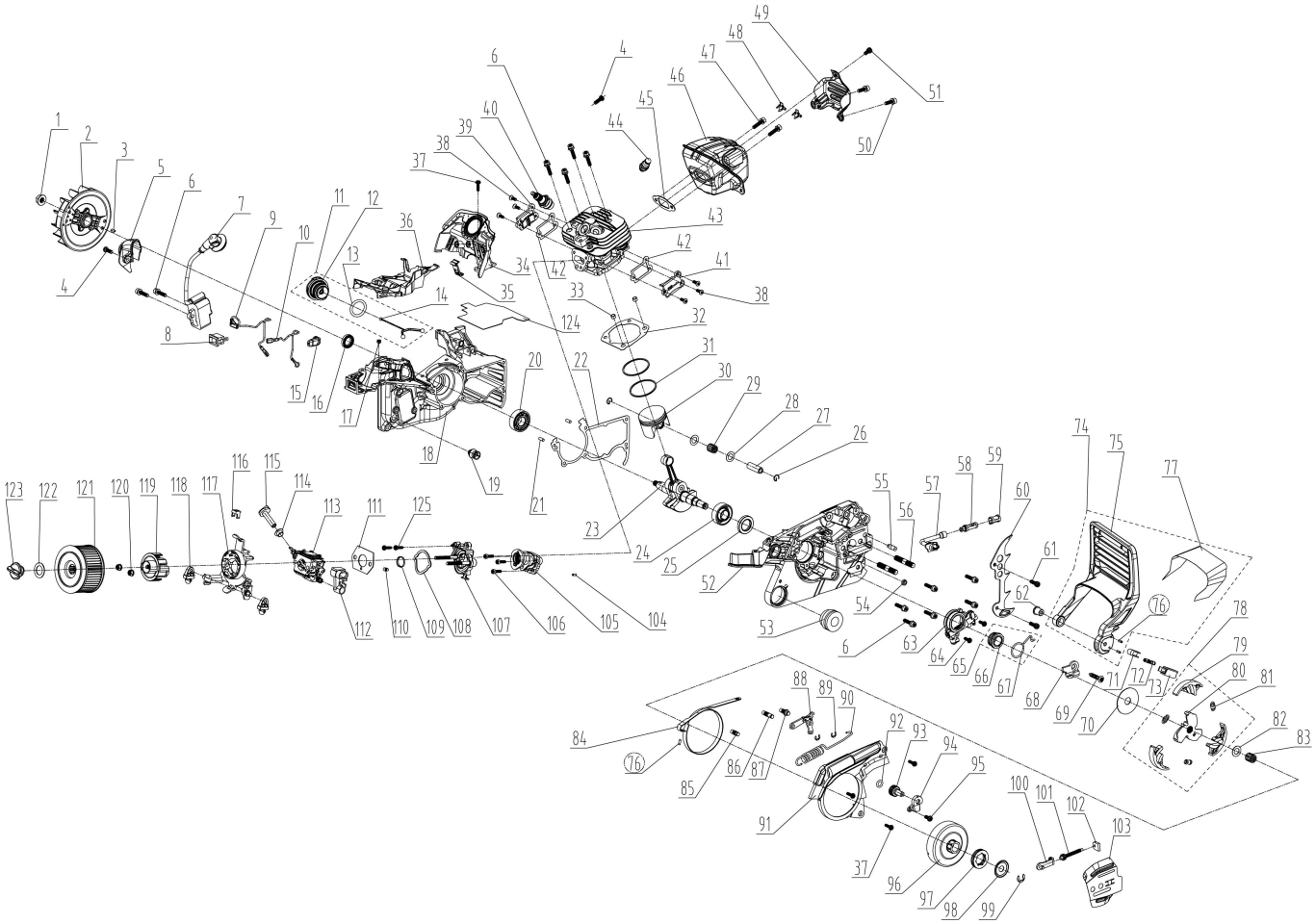

PRORUN regularly improves our products, and you may find slight differences between your machine and descriptions contained within this operator's manual. Modifications can be made to the machine without notice and without the obligation to update the manual, providing that the essential safety and functional characteristics remain unaltered. Contact PRORUN Customer Service with any questions and for current specifications.

PRORUN / TOPSUN USA
200 Overhill Drive, Suite A
Mooresville, NC 28117
Proruntech.com
info@proruntech.com
Phone: 1-844-905-0882

Zhejiang Zhongjian Technology Co., Ltd
Web: www.topsunpower.cc
E-mail: sales@topsunpower.cc
ADD: No.155 Mingyuan North AVE, Economic Development Zone,
Yongkang, Zhejiang, 321300, P.R.China
Made In China