Protable Wireless Speaker System

Model: FS-L299

Operation Manual

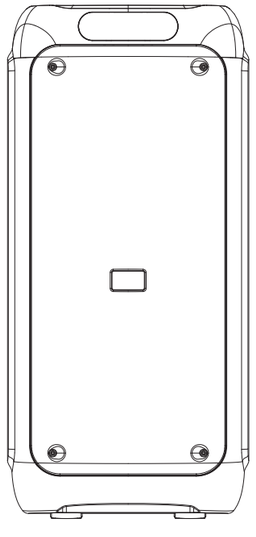

Functional panel diagram

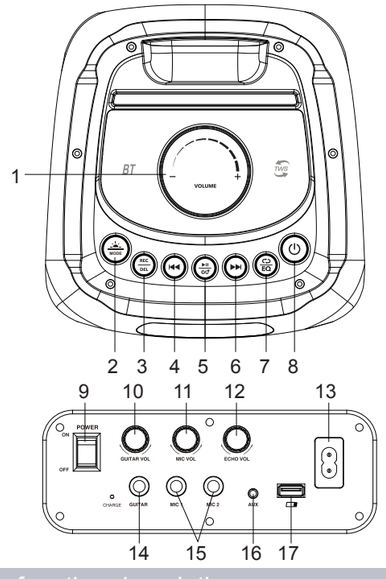

Button function description.

1. VOLUME: Volume change.
2. MODE: The starter automatically enters wireless mode. Press the short switch mode, enter FM-USB-AUX mode in sequence, and then press to return to wireless mode. In FM mode, short press "▶II" to start channel search, and then short press "▶II" again to stop search. Long press this key to enter the lighting selection, there are 7 lighting modes, and long press 8 times for lighting.
3. REC/DEL: After connecting the microphone and memory, press once to start recording, then press again to complete recording and check the recorded audio. To delete recorded audio, press and hold the button while playing the recorded audio.
4. ⏮: Put this song first. In FM mode, pressing briefly will reach the previous channel.
5. ▶II: Press briefly to play music, then press again to stop. In wireless mode, press within a few seconds to pair TWS, and press twice to disconnect.
6. ⏭: Put down a song. In FM mode, pressing briefly will lead to the next channel.
7. EQ:Short press this button to select the EQ effect. Within a few seconds, press this button to cycle mode. When scrolling looks like "ONE" is a loop for one song, and when scrolling looks like "ALL" is a loop for all songs. When scrolling looks like "RAND", a jumping song will appear. When scrolling to "FOLD", all songs in the current folder will be generated.
8. ⏻: Long press to open, long press to close again.
9. Ignition switch: "-" indicates on, "or" indicates off.
10. GUITAR VOL: Adjust the volume of the guitar.
11. MIC VOL: Changes in microphone volume.
12. ECHO VOL: Adjust the reverb effect.
13. AC input ~100-240V 50/60Hz
14. GUITAR: Connect the entrance of the guitar.
15. Microphone input
16. AUX: Audio Input
17. USB input

Specifications

Speaker Size: 8”x2+1”
Frequency Response: 40Hz-20KHz
S/N Ratio:≥78dB
Output Power: 30Wx2
Power: IN ~100-240V 50/60Hz
Battery Capacity:14.8V/2200mAh

Accessories

Audio cable	1 PC
Power cable	1 PC
Microphone	1 PC
Instruction manual	1 PC

Important Safety

⚠ The lightning fash with arrowhead symbol within an equilateral triangle is intended to alert the user to the presence of un-isolated, dangerous voltage within the inside of the device that may be of sufficient magnitude to constitute a risk of electric shock to persons.
Warning: To reduce the risk of electric shock, do not remove cover (or back) as there are no user-serviceable parts inside. Refer servicing to qualified personnel.

⚠ **WARNING**: To reduce the risk of fire or electric shock, do not expose this apparatus to rain or moisture. The apparatus shall not be exposed to dripping or splashing and that objects filled with liquids, such as vases, shall not be placed on apparatus.
WARNING: Where the mains plug/appliance coupler is used as the disconnect device, the disconnect device shall remain readily operable.
WARNING: The battery (battery or batteries or battery pack) shall not be exposed to excessive heat such as sunshine, fire or the like. Read these instructions before operation. Keep these instructions for future reference. Follow all instructions for installation, use and maintenance of the device. To clean the device, disconnect power first. Clean only with soft and dry cloth. To ensure compatibility, only use accessories recommended by the manufacturer. When the device is suddenly moved from cold to warm surroundings, condensation may form in the housing of the device. Before use, leave the device in the warm environment until the moisture evaporates. Keep the device away from heat sources, such asa radiator, heater, oven, amplifier, naked flames or direct sunlight. No naked fame sources, such as lighted candles, should be placed on the apparatus. Never block any ventilation openings. Install in accordance with the manufacturer's instructions. Do not expose the device to sand or dust, or cover it with items, such as newspapers, tablecloths, or curtains. Do not operate the device in an enclosed cabinet. Leave sufficient free space around the device for adequate ventilation.Do not attempt to repair or service the device yourself. Opening or removing the cabinet may expose you to electric shock, and other hazards. If repair is required, contact your dealer and refer all servicing to qualified service personnel. Do not use the device if any abnormality occurs. If any smoke or odor becomes apparent, contact your dealer immediately. Do not try to repair the device yourself. Avoid using dropped or damaged appliances. If the device is dropped and the housing is damaged, the internal components may not function normally. Stop use and contact your dealer for repair. Continued use of the device may cause fire or electric shock. To reduce the risk of electric shock, do not touch any connector with wet hands. Never remove the housing of the device. Never lubricate any part of the device. Never place the device on top of any other electrical equipment.
⧈ This equipment is a Class II or double insulated electrical appliance. It has been designed in such away that it does not require a safety connection to electrical earth.
Notice Modification
Any modification (such as removing the speaker grill)to the device, without prior authorization from the manufacturer, may void your warranty and authority to operate the device.

FCC Statement

Warning: Changes or modifications to this unit not expressly approved by the party responsible for compliance could void the user’s authority to operate the equipment.

NOTE: This equipment has been tested and found to comply with the limits for a Class B digital device, pursuant to Part 15 of the FCC Rules. These limits are designed to provide reasonable protection against harmful interference in a residential installation. This equipment generates, uses and can radiate radio frequency energy and, if not installed and used in accordance with the instructions, may cause harmful interference to radio communications.
However, there is no guarantee that interference will not occur in a particular installation. If this equipment does cause harmful interference to radio or television reception, which can be determined by turning the equipment off and on, the user is encouraged to try to correct the interference by one or more of the following measures:

- Reorient or relocate the receiving antenna.
- Increase the separation between the equipment and receiver.
- Connect the equipment into an outlet on a circuit different from that to which the receiver is connected.
- Consult the dealer or an experienced radio/TV technician for help.

The device must not be co-located or operating in conjunction with any other antenna or transmitter.