SELF-CONTAINED/MODULAR CUBER
MACHINE A GLACONS CUBIQUES MODULAIRE/AUTONOME
STECKERFERTIGER/MODULARER WÜRFELEISBEREITER
IJSBLOKJESMACHINE MET INGEBOUWDE/LOSSE OPSLAGBUNKER
MÁQUINA FABRICADORA DE HIELO MODULAR/INTEGRADA
FABBRICATORE CUBETTI DI GHIACCIO MODULARE/A RISERVA INCORPORATA
FRITSTÅENDE/INDBYGGET ISTERNINGMASKINE
FRITTSTÅENDE/MODULBASERT ISBITMASKIN
ISKUBMASKIN MED INBYGGT/SEPARAT ISMAGASIN

INSTRUCTION MANUAL
(original instructions)

NOTICE D'UTILISATION
(instructions traduites)

BEDIENUNGSANLEITUNG
(Übersetzung)

GEBRUIKSAANWIJZING
(vertaalde instructies)

MANUAL DE INSTRUCCIONES
(instrucciones traducidas)

MANUALE D'ISTRUZIONI
(traduzione)

BETJENINGSVEJLEDNING
(oversættelse)

BRUKSANVISNING
(oversettelse)

BRUKSANVISNING
(översättning)

IM-21CPE
IM-30CPE
IM-30CWPE
IM-45CPE
IM-45PE
IM-45WPE
IM-65PE
IM-65WPE
IM-100PE
IM-130CPE
IM-130PE
IM-130WPE
IM-130APE
IM-240PE
IM-240WPE
IM-240APE
IM-240AWPE
IM-240DPE
IM-240DWPE
IM-240XPE
IM-240XWPE

HOSHIZAKI EUROPE LIMITED
Telford 70 Stafford Park 7, Telford, Shropshire TF3 3BQ UK

L1M113205 (091925)

IMPORTANT SAFETY INFORMATION

Throughout this manual, notices appear to bring your attention to situations which could result in death, serious injury, or damage to the unit.

⚠WARNING	Indicates a hazardous situation which, if not avoided, could result in death or serious injury.
⚠CAUTION	Indicates a hazardous situation which, if not avoided, could result in minor or moderate injury.
NOTICE	Indicates a hazardous situation which, if not avoided, could result in damage to the unit.
⚠HYGIENE	Indicates important precautions for hygiene and food safety.
IMPORTANT	Indicates important information about the use and care of the unit.

This icemaker uses HFC-free refrigerant (propane) that is a non-ozone-depleting and environmentally sustainable material having very low global warming potential.

⚠WARNING
This icemaker contains flammable refrigerant in its cooling unit; installation, handling, servicing and disposal must therefore only be carried out by authorized technicians.
The refrigerant contained in this icemaker is flammable and sealed in the refrigeration system. Although the refrigerant does not leak out under normal usage, take utmost care when handling this icemaker so as not to cause any damages to the system.
In the case of accidental damage to the refrigeration system causing refrigerant leak: * Do not create a source of ignition in the area. * Do not operate electrical switches or plugs in the area. * Do not use naked flame. * Immediately ventilate the area by opening doors and/or windows. * Call service engineer.

IMPORTANT
This booklet is an integral and essential part of the product and should be kept and preserved by the user.
Please read carefully the guidelines and warnings contained herein as they are intended to provide the installer/user with essential information for the proper installation and the continued safe use and maintenance of the product.
Please preserve this booklet for any further consultation that may be necessary.
These products are IP20 rated.

⚠WARNING
This is a commercial icemaker, and should be destined only to be used for the purpose for which it has been expressly designed. Any other use should be considered improper and therefore dangerous. The manufacturer will not be held liable or responsible for any damage caused by improper, incorrect and unreasonable use.
The installation, and relocation if necessary, must be carried out by qualified personnel, in accordance with current regulations, according to the manufacturer's instructions.
Keep ventilation openings, in the appliance enclosure or in the built-in structure, clear of obstruction.
Do not use mechanical devices or other means to accelerate the defrosting process, other than those recommended by the manufacturer.
The use of any electrical appliance involves the observance of some fundamental rules. In particular: * Instances of high humidity and moisture increase the risk of electrical short circuits and potential electrical shocks. If in doubt, disconnect the icemaker. * Do not damage the power cord or pull it in order to disconnect the icemaker from the electrical supply network. * If the supply cord and/or the plug should need to be replaced, it should only be done by a qualified service engineer. * Do not touch the electrical parts or operate the switches with damp hands. * This appliance is not intended for use by persons (including children) with reduced physical, sensory or mental capabilities, or lack of experience and knowledge, it can however be used by children aged from 8 years and above and persons with reduced physical, sensory or mental capabilities, or lack of experience and knowledge providing they have been given supervision or instruction concerning use of the appliance by a person responsible for their safety. * Children shall not play with the appliance. * Cleaning and user maintenance shall not be made by children without supervision. * Do not attempt to modify the icemaker. Only qualified personnel may disassemble or repair the appliance.
When positioning the appliance, ensure the supply cord is not trapped or damaged.
Do not locate multiple portable socket-outlets or portable power supplies at the rear of the appliance.
The meaning of this ISO 7010 W021 symbol is: Warning: Risk of fire / flammable materials

I. INSTALLATION INSTRUCTIONS

1. CONSTRUCTION

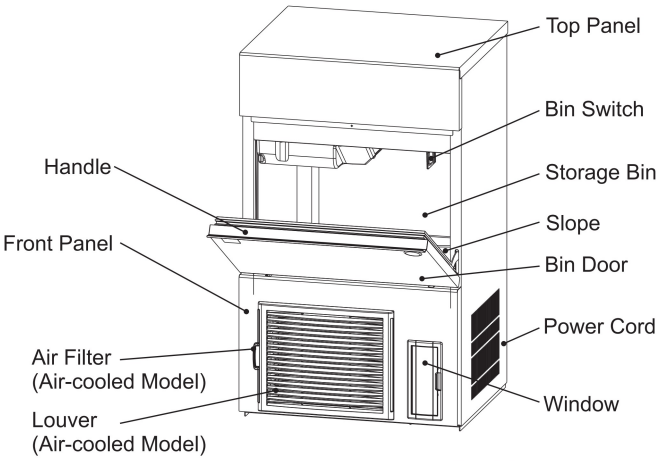

[IM-21/30/45/65/100/130/240PE/WPE]

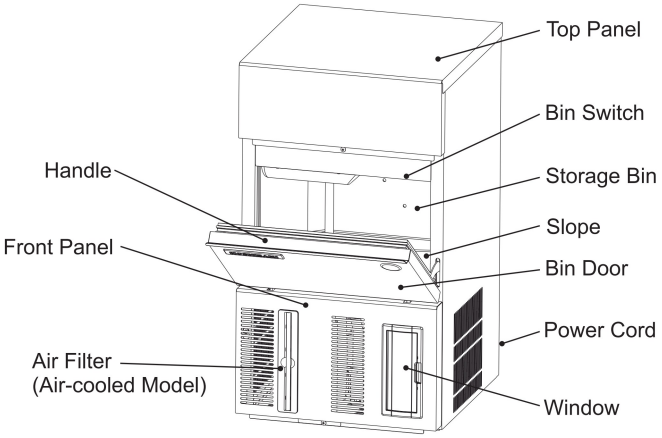

[IM-21/30CPE]

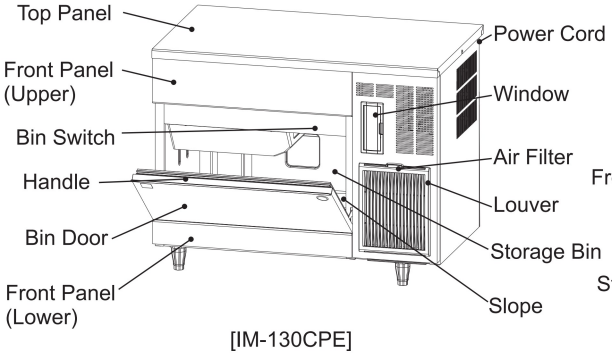

[IM-130CPE]

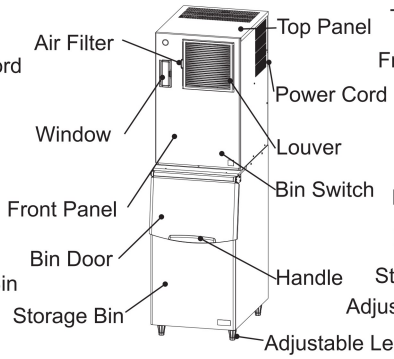

[IM-240APE/AWPE]

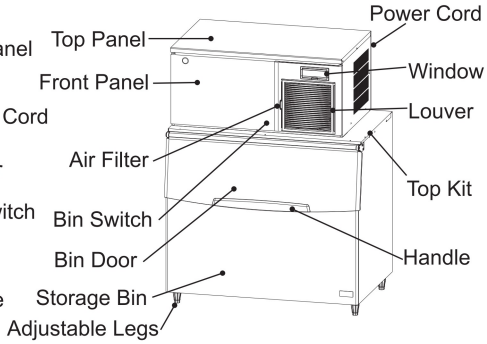

[IM-240DPE/DWPE/XPE/XWPE]

2. ACCESSORIES

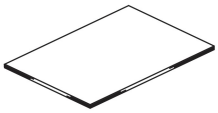

Instruction Manual

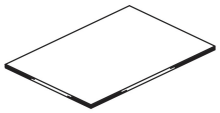

Quick Start Guide

Inlet Hose

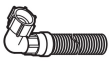

Outlet Hose

3/4-3/4
Nipple

1/2-3/4
Nipple

Leg

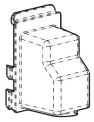

Connector Cover

Scoop

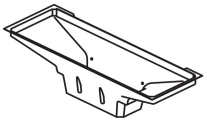

Ice Chute (X type)

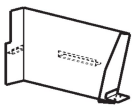

Ice Chute (A type)

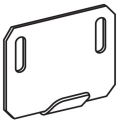

Mounting Bracket

Bolt w/Washer

Wire Clamp

Bolt M8 x 16

Plastic Washer

Nut M8

The presence of UVC and drain pump components varies by model; they may be preinstalled or omitted depending on the specific configuration.
* Qty.1 Hose clamp included in all drain pump models, IM-21CPE does not include legs. Compatibility kits are sold separately.

[a] Self-Contained Models

	IM-21/30/45CPE, IM-45/65/100/130/240PE	IM-30CWPE, IM-45/65/100/130/240WPE	IM-130CPE
Instruction Manual	1	1	1
Quick Start Guide	1	1	1
Inlet Hose	1	3	1
Outlet Hose	1	1	1
3/4-3/4 Nipple	-	-	1
1/2-3/4 Nipple	-	2	-
Leg	4	4	5
Connector Cover	1	1	1
Scoop	1	1	1

[b] Modular Models

	IM-130/240APE	IM-240AWPE	IM-240DPE	IM-240DWPE	IM-240XPE	IM-240XWPE
Instruction Manual	1	1	1	1	1	1
Quick Start Guide	1	1	1	1	1	1
Inlet Hose	1	3	1	3	1	3
Outlet Hose	1	1	1	1	1	1
1/2-3/4 Nipple	-	2	-	2	-	2
Connector Cover	1	1	1	1	1	1
Ice Chute	1	1	-	-	1	1
Mounting Bracket	2	2	2	2	2	2
Bolt w/Washer M5x12	2	2	2	2	-	-
Bolt w/Washer M4x10	-	-	-	-	4	4
Wire Clamp	-	-	-	-	2	2
Bolt M8x16	-	-	2	2	2	2
Plastic Washer	-	-	2	2	4	4
Nut M8	-	-	2	2	2	2

* Drain pump and UVC features can be installed as optional kits. Please contact your dealer/supplier, or the nearest Hoshizaki Service office for details.

3. UNPACKING

⚠WARNING
Children should not be allowed in reach of the packaging elements (plastic bags and expanded polystyrene) as they are potential sources of danger.

⚠CAUTION
Do not lift or manoeuvre the carton by using the shipping bands.
When moving the unit by hand, hold the unit bottom.
Always wear protective gloves when carrying the unit.
When handling the carton or the unpacked unit, work in pairs to prevent injury.

NOTICE
Remove shipping carton, tape(s) and packing. If packing material is left in the icemaker, it will not work properly.

1) Remove the external packaging.

2) After removing the packaging, make sure that the icemaker is in good condition. If in doubt, please do not use the icemaker but apply to professionally qualified personnel.

3) Remove the shipping tape holding the door and front panel louver.

4) Remove the protective plastic film from the exterior. If the icemaker is exposed to the sun or to heat, remove the film after the icemaker cools.

5) Remove the package of accessories. Check the contents according to “2. ACCESSORIES”.

6) Remove the shipping tape holding the bin control switch.

   a. Self-contained models: by opening the bin door and reaching in.

   b. Modular models: by opening the front panel and removing bin control from drain pan.

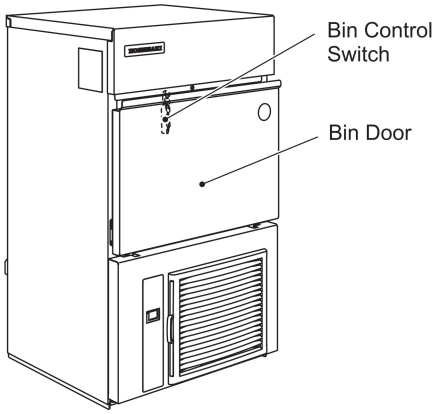

Self-Contained Models
[IM-21/30/45/65/100/130/240PE/WPE/CPE]

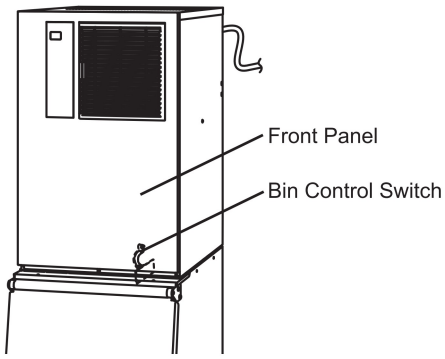

Modular Models
[IM-130/240APE/AWPE/DPE/DWPE]

Note: Modular models need a storage bin, Hoshizaki recommends the following:

a. A type (IM-130/240APE/AWPE): B-140SA
b. D/X type (IM-240DPE/DWPE/XPE/XWPE): B-340SA

4. LOCATION

⚠WARNING
This icemaker is not intended for outdoor use.
The icemaker should not be located next to ovens, grills or other high heat producing equipment.
This appliance is not suitable for installation in an area where a water jet could be used.

⚠CAUTION
The location should provide a firm and level foundation for the icemaker.

NOTICE
Do not place anything on top of the icemaker or in front of the louver.

IMPORTANT
Normal operating ambient temperature should be within 1°C to 40°C. Water connection is cold water only. Operation of the icemaker, for extended periods, outside of these normal temperature ranges may affect production capacity.
Climatic Class 5: This appliance electrical safety tested for operation in maximum ambient temperature of 43°C with 40% relative humidity. However, normal operating ambient temperature must be within 7°C to 38°C.
Allow the clearance specified below for proper air circulation and ease of maintenance and/or service should they be required.

[IM-21/30CPE/CWPE, IM-45CPE]

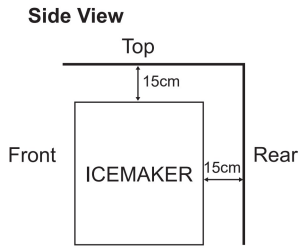

* No clearance required on sides

[IM-240PE/WPE/APE/AWPE]

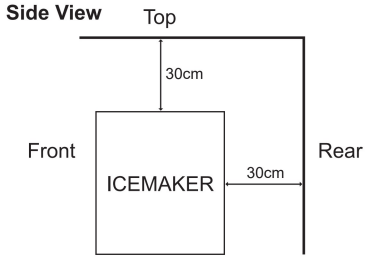

* 5cm clearance required on sides

[IM-45/65/100/130PE/WPE, IM-130CPE]

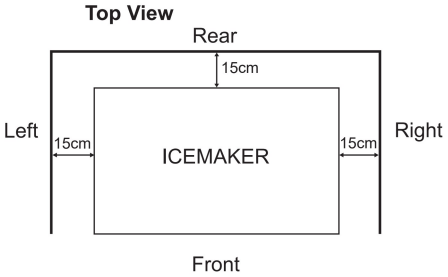

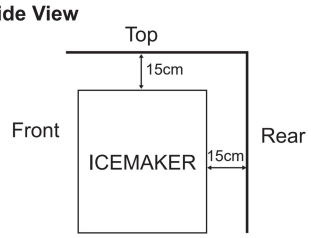

[IM-240DPE/DWPE, IM-240XPE/XWPE]

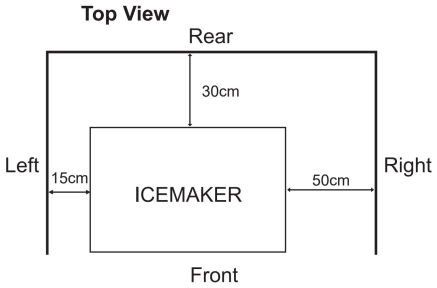

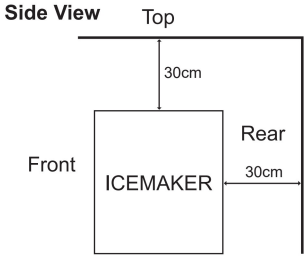

In some high humidity environments, condensation may form inside the machine and drip onto the floor. Do not install where the floor can be affected by water.
Avoid prolonged exposure of the appliance to direct sunlight.

5. INSTALLATION

⚠CAUTION
Incorrect installation can cause harm to people, animals or other items, for which the manufacturer cannot be held responsible.

[a] Self-Contained Model

1) Place the icemaker in the selected permanent site.

2) Secure the adjustable legs (accessories) into the tapped holes on the underside icemaker, level the unit in both the left-to-right and front-to-rear directions.

[b] Modular Model

1) Lay the storage bin on its rear side carefully to prevent damage. Secure the four adjustable legs (bin accessory) into the four tapped holes on the underside of the bin.

2) Position the storage bin in the selected permanent position, and level it in both the left-to-right and front-to-rear directions.

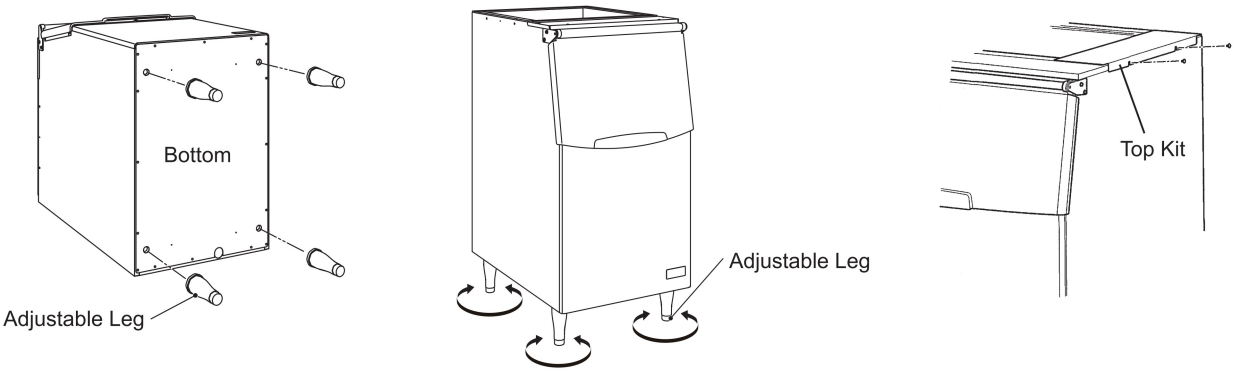

3) Use the screws provided on the left or right side of the storage bin to install the top kit as required.

4) Remove the icemaker panels. The rear panel is not required to be removed for installation. See “3. UNPACKING”.

5) Place the icemaker on the top of the storage bin. Be careful not to damage the icemaker.

6) Secure the icemaker to the storage bin at the rear, by using the mounting brackets and bolts provided.

7) Seal the seam between the icemaker and the storage bin with food grade sealant.

8) A Type model only: Remove the drain pipe collar and drain pan. Secure the bin control switch to the mounting frame using the two bolts provided. Fix the bin control switch wiring with the two nylon ties. Place the ice chute on the unit frame, and refit the drain pan in its correct position.

9) Replace the icemaker panels in their correct position.

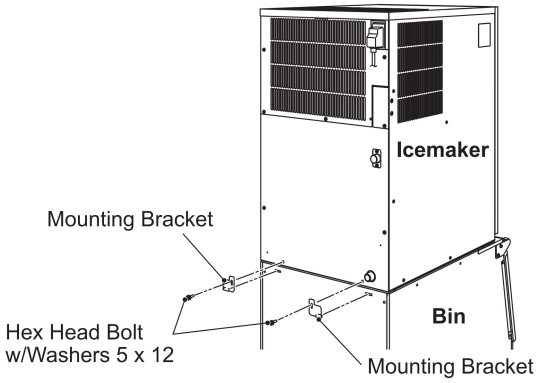

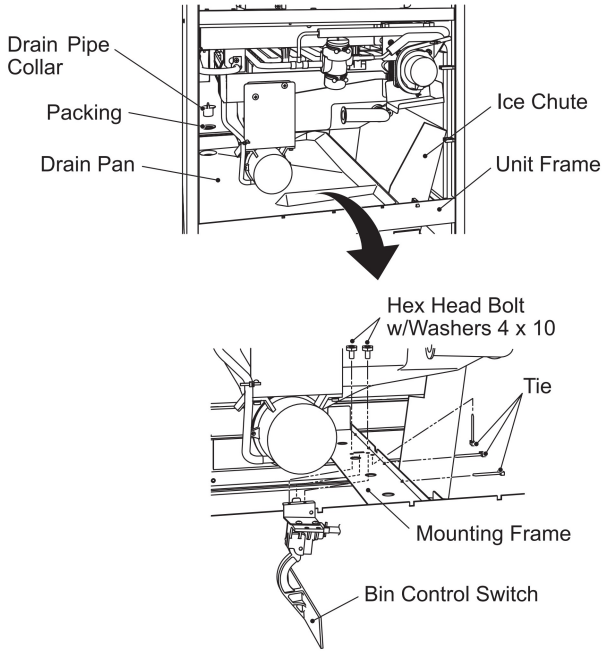

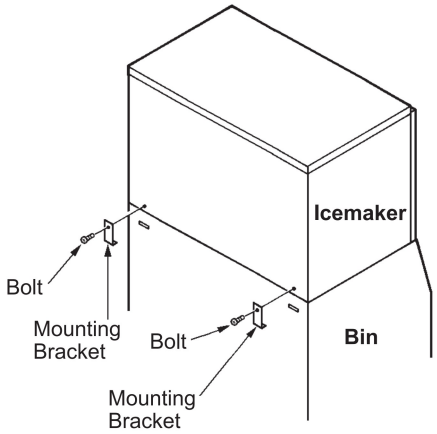

[c] Stacking Modular Model – D / X Type

NOTICE
Check the icemaker models. A D-type icemaker and an X-type icemaker will be required for stacking two icemakers. A D-type icemaker and two X-type icemakers will be required when stacking three icemakers. The D-type icemaker is designed for the upper unit, and the X-type for the middle and lower units.
The D-type and X-type icemakers are provided with two different types of bin control switch. Use the bin control switch of the lower (and middle) X-type icemakers when stacking icemakers. The bin control switch must be removed from the upper unit. Misconnection or no connection may cause serious damage to the icemaker units, resulting in failure.

1) Prepare and position the storage bin as detailed in 1), 2), 3) and 4) in “5. INSTALLATION”.

2) Attach the lower unit (X-type) on the top of the storage bin.

3) Secure the lower unit (X-type) to the storage bin at the rear, by using the mounting brackets and bolts provided.

4) Remove the shipping tape holding the bin control switch on the drain pan. Attach the bin control switch to the frame located at the left bottom of the condensing unit, and secure it using the two screws and the two washers provided.

5) Before stacking, disconnect the bin control switch leads (with three-way plug) from the upper or middle unit. Remove the screws and the bin control switch. When stacking two or three icemakers, the switch for the upper unit will not be required. Keep it after removal.

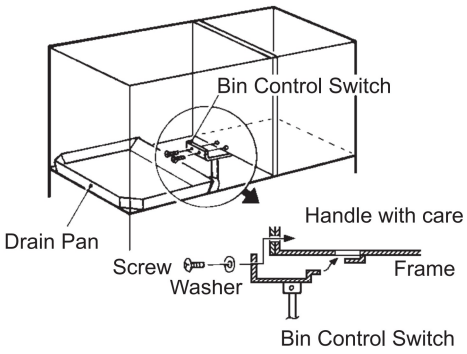

6) Attach the upper or middle unit on the lower unit.

7) Secure the two units with the two bolts and the two nuts provided.

8) Place the ice chute (lower or middle unit accessory) and secure it to the bracket with the two screws.

9) Connect the leads (with three-way plug) located in the lower unit wiring channel to the upper unit receptacle, unplugged in the above step 6). Secure the leads using the plastic clamp provided.

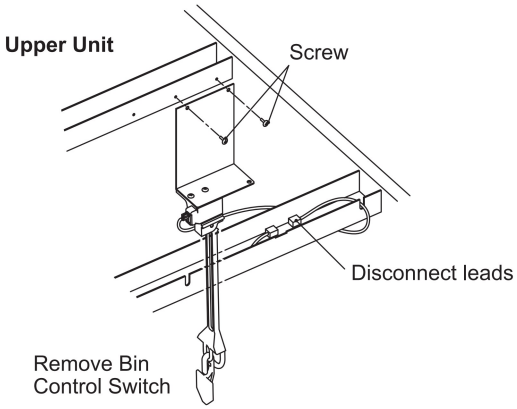

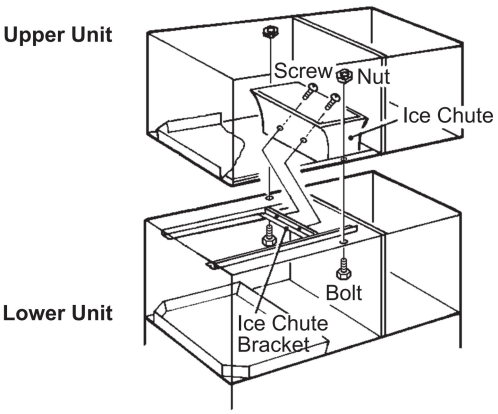

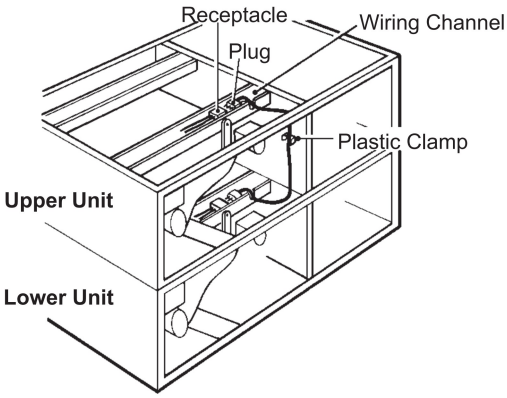

10) Replace the icemaker panels in their correct position.

Note: If stacking three icemakers, repeat the instructions 6) - 11) for the upper unit. Remember, only ONE bin control is needed regardless of configuration. The bin control extension leads are pre-wired with the plug and will be found coiled in the X-type wiring channel.

6. ELECTRICAL CONNECTIONS

⚠WARNING
THIS APPLIANCE MUST BE EARTHED This icemaker requires an earth that meets the national and local electrical code requirements.
To prevent possible severe electrical shock to individuals or extensive damage to the unit, install a proper earth wire to the icemaker.
Disconnect the main power supply before any maintenance, repairs or cleaning is undertaken.

* This appliance requires a separate 220 - 240VAC supply:

10A [IM-21/30CPE/CWPE, 45CPE/PE/WPE, 65PE/WPE, 100/130CPE/PE/WPE/APE]

13A [IM-240PE/WPE/APE/AWPE/DPE/DWPE/XPE/XWPE]

* The electrical supply must be protected by a suitable circuit breaker.

* The main control box fuse is rated at 5A and should only be replaced by a qualified service engineer.

* Usually an electrical permit and services of a licensed electrician are required.

For the U.K. and the Republic of Ireland only

* The wires in the mains lead are coloured in accordance with the following code:
  Green & Yellow = Earth
  Blue = Neutral
  Brown = Live

As the colours of the wire in the mains lead of this appliance may not correspond with the coloured markings identifying the terminals in your plug, proceed as follows:

The wire which is coloured Green-and-Yellow must be connected to the terminal in the plug which is marked with the letter E or by the symbol ⏚ or coloured Green or Green-and-Yellow.
The wire which is coloured Blue must be connected to the terminal which is marked with the letter N.
The wire which is coloured Brown must be connected to the terminal which is marked with the letter L.

7. WATER SUPPLY AND DRAIN CONNECTIONS

⚠WARNING

Connect to potable cold water supply only.

* The connections to the mains water supply must be made in accordance with the countries' current requirements of the Water Supply or Water Fittings Regulations.

* Icemaking water must be potable water. Where scaling can be caused by water quality:
  - Installation of an external filter or softener is recommended. Contact your local water treatment professional or Hoshizaki service agent.
  - Change to the "full drain flush" mode is recommended. Contact your local Hoshizaki service agent.

* A plumbing permit and services of a licensed plumber may be required in some areas.

* The rated water supply temperature is 5 - 35°C at a rated pressure of 0.05 - 0.8 MPa (0.5 - 8 bar) with a required flow rate of 3.8L/min. If the pressure exceeds 0.8MPa (8 bar), use a proper pressure reducing valve. Do NOT throttle back the supply tap.

* Be sure to use the new hose-sets supplied with the appliance. Do not reuse any old hose-sets.

[a] Drain Connections

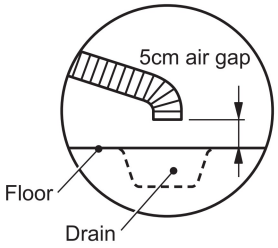

* Drain lines should not be installed directly to the sewer system. A vertical air gap of a minimum of 5 cm should be between the end of the drain hoses from the icemaker and the floor drain.

[Gravity Drain Models]

* The icemaker drain is gravity flow, so ensure drain hose has an adequate pitch or fall, as shown.

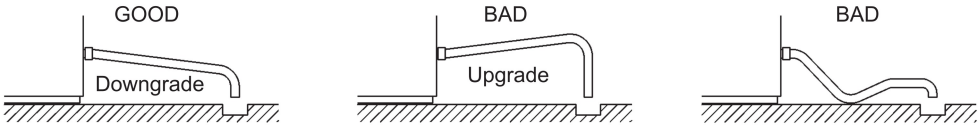

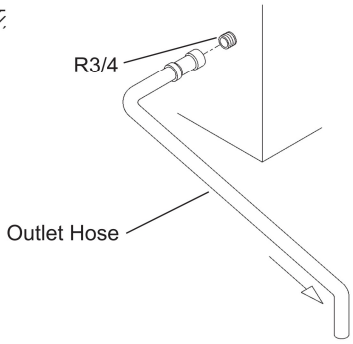

* To prevent a backflow into the storage bin, the outlet hose must be laid as shown.

Except IM-130CPE

1) Hand tighten grey flexible outlet hose (accessory) onto the R3/4 fitting on the rear of the icemaker as indicated, ensuring rubber washer is correctly positioned to obtain a leak free joint. The hose can be cut to length as necessary to suit position of main drain.

IM-130CPE

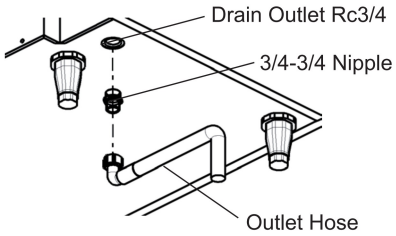

1) By means of a suitable spanner or wrench, tighten the 3/4-3/4 nipple (accessory) into the Rc3/4 fitting on the bottom of the icemaker as indicated. P.T.F.E. tape and/or a suitable sealing compound should be used to obtain a leak free joint.

   Note: Jointing compounds should be approved and suitable for potable water use.

2) Hand tighten grey flexible outlet hose (accessory) onto the 3/4-3/4 nipple as indicated, ensuring rubber washer is correctly positioned to obtain a leak free joint. The hose can be cut to length as necessary to suit position of drain.

[Drain Pump Models]

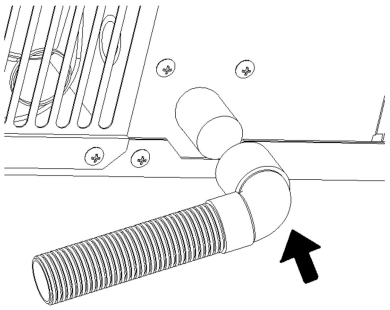

1) Attach the angled end of the flexible outlet hose (accessory) to the 22 mm DIA push fitting on the rear of the icemaker as indicated, ensure that the clamp is placed over the angled end to provide a leak free joint.

2) It is advised that the drain hose has a slight downgrade before going vertical.

Note: Maximum height (H) 1.5 m at length (L) 5 m, Maximum length (L) 15 m at height 0.5 m

Hose provided in the accessory kit is 2 m long. To increase the length of drain hose please replace the outlet hose with a hose with a 22 mm ID up to the maximum values shown above.

[b] Potable Water Supply - Air & Water-Cooled Models

1) Attach the angled end of flexible inlet hose (accessory) to the G3/4 fitting on the rear of the icemaker as indicated, ensuring rubber sealing washer is correctly positioned. Hand tighten sufficiently to provide leak free joint.

2) Attach the other end of inlet hose to the water tap, noting washer is correctly positioned before hand-tightening as above. It is a wise precaution to have a stop valve within easy reach.

Air-Cooled Model

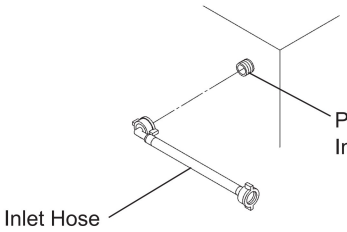

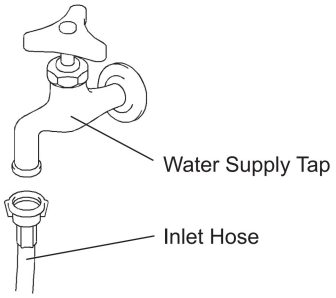

Note: To avoid performance reduction or malfunction caused by scaling, the water supply should have a hardness of not more than 150mg/L and a silica content of not more than 30mg/L. Otherwise, installation of a proper water treatment device will be required.

[c] Condensing Water Supply - Water-Cooled Model

* Hoshizaki recommends that the water-cooled condenser should be connected to a closed circuit recirculating type cooling system utilizing a tower, water chiller or similar. Water make up should be via a ball valve/break tank arrangement.

* Whilst connecting a water-cooled condenser to a mains water (potable) supply will not affect the performance of the machine, it will most certainly cause a high use/ waste of a valuable resource and is not recommended.

* The services of a licensed or coded plumber should be used to ensure a correct installation.

* The connections should be made properly in compliance with the applicable national or local regulations.

* Pipes between the cooling tower and the icemaker should be at least 20 mm DIA to reduce pressure loss, even though the icemaker fittings are 13 mm DIA.

* Pressure loss in the water circuit inside the unit will be 5 to 6 m when the cooling water flows at the ratio of 4 to 5 lit/min.

* When selecting a cooling tower, refer to the following peak values of heat flow in the condenser:

Model	IM-30CW/45W:	295 - 760W
	IM-65W:	875W
	IM-100/130W:	1165W
	IM-240W:	5235W

Water-Cooled Model

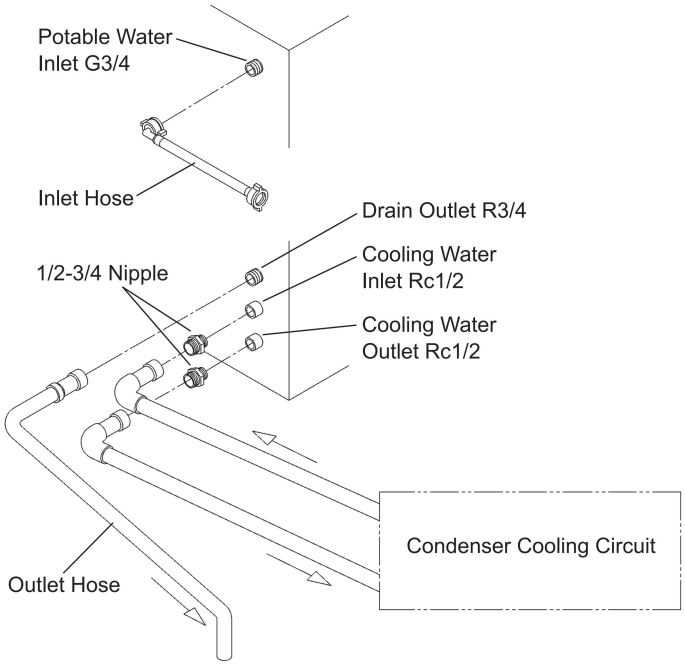

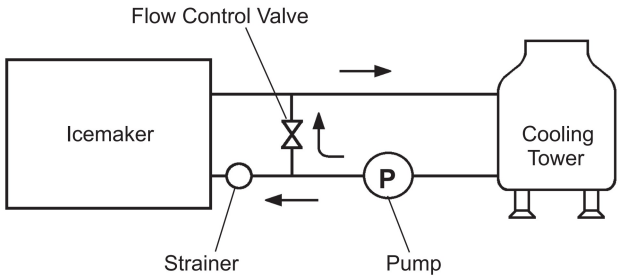

* Select a circulating pump referring to the above values of heat flow.

* Do not use a cascade pump, or the water regulator will vary the flow and stop it during the defrost cycle.

[d] Icemaker Connections

1) By means of a suitable spanner or wrench, tighten the 1/2-3/4 nipples (accessory) into the Rc1/2 fittings on the rear of the icemaker as indicated. P.T.F.E. tape and/or a suitable sealing compound should be used to obtain a leak free joint.

   Note: Jointing compounds should be approved and suitable for potable water use.

2) Attach two of the angled end of the flexible hose (accessory) to the 1/2-3/4 nipple attached to the ice maker, ensuring rubber sealing washer is correctly positioned. Hand tighten sufficiently to provide leak free joint.

3) Connect the condenser cooling circuit to the free end of the flexible hoses (accessory) attached to the 1/2-3/4 nipples as indicated, make sure all joints are leak free.

   Note: If filtration or treatment is used, ensure icemaker section only is on treated water supply, not the condenser.