PRORUN®

20V/// Lithium-Ion

Operator's Manual

CHAINSAW

MODEL: PCS120

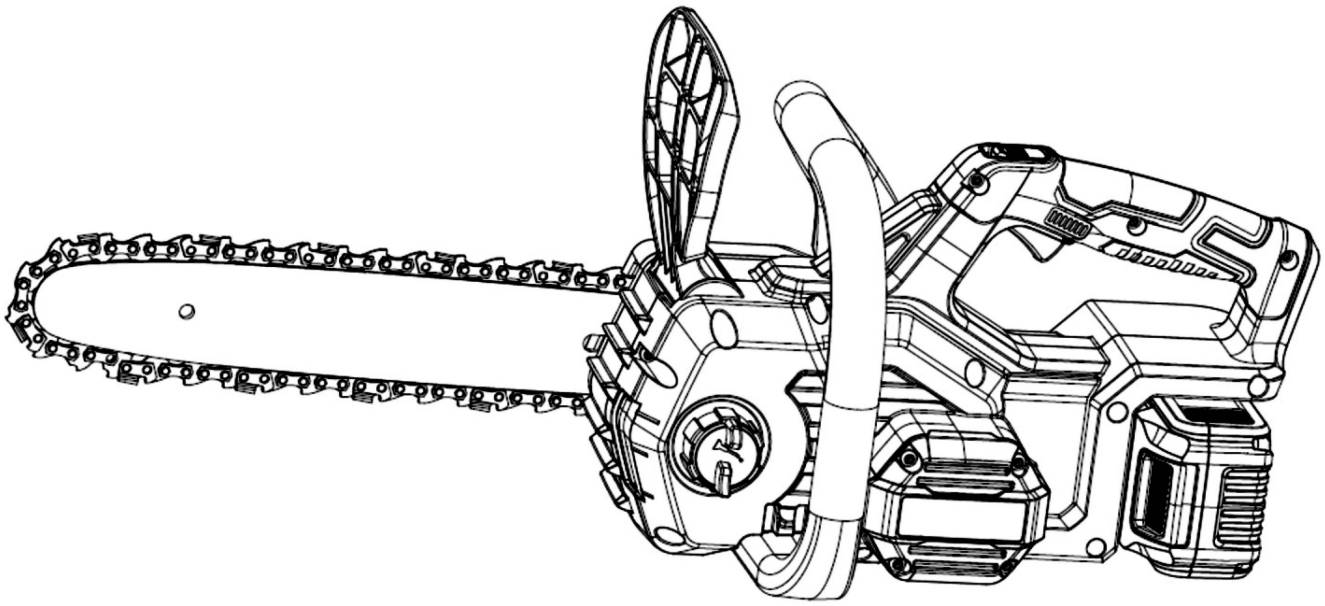

Everything PRORUN

Before charging, read the instructions.

⚠ **IMPORTANT - READ CAREFULLY BEFORE USE**

⚠ **IMPORTANT SAFETY INSTRUCTIONS – SAVE THESE INSTRUCTIONS**

WARNING: To reduce the risk of injury, the user must read and understand the Operator's Manual before using this product. Save these instructions for future reference.

Please let us know what you think.
To leave a review and see our full line of products, visit:

proruntech.com ★★★★★
1-844-905-0882, info@proruntech.com

Version: B - Issue Date: 2023/03/31

Table of Contents

1. GENERAL MACHINE SAFETY WARNINGS Page 1
2. SAFETY INSTRUCTIONS FOR CHAINSAW Page 4
3. TRANSPORTING AND STORAGE Page 6
4. BATTERY CHARGER AND BATTERY Page 7
5. SYMBOLS Page 9
6. SPECIFICATIONS Page 11
7. KNOW YOUR CHAINSAW Page 12
8. BATTERY AND CHARGER OPERATION Page 14
9. ASSEMBLY INSTRUCTIONS Page 16
10. OPERATIONS Page 17
11. ENVIRONMENTAL PROTECTION Page 24
12. MAINTENANCE Page 25
13. TROUBLESHOOTING Page 34
14. EC DECLARATION Page 35

1. GENERAL MACHINE SAFETY WARNINGS

⚠ WARNING! Read all safety warnings, instructions, illustrations, and specifications provided with this machine. *Failure to follow the warnings and instructions may result in electric shock, fire, and/or serious injuries.*

Save all warnings and instructions for future reference.

The term "machine" in all of the warnings listed below refers to your battery operated (cordless) machine.

● Work area safety

a) Keep work area clean and well lit. *Cluttered or dark areas invite accidents.*

b) Do not operate machines in explosive atmospheres, such as in the presence of flammable liquids, gases, or dust. *Machines create sparks which may ignite the dust or fumes.*

c) Keep children and bystanders away while operating a machine. *Distractions can cause you to lose control.*

● Electrical safety

a) Avoid body contact with earthed or grounded surfaces such as pipes, radiators, ranges, and refrigerators. *There is an increased risk of electric shock if your body is earthed or grounded.*

b) Do not expose machines to rain or wet conditions. *Water entering a machine will increase the risk of electric shock.*

c) Do not abuse the battery charger cord. Never use the cord for carrying.

Keep cord away from heat, oil, sharp edges, or moving parts. Damaged or entangled cords increase the risk of electric shock.

● Personal safety

a) Stay alert, watch what you are doing, and use common sense when operating a machine. Do not use a machine while you are tired or under the influence of drugs, alcohol, or medication. *A moment of inattention while operating machines may result in serious personal injury.*

b) Use personal protective equipment. Always wear eye protection. *Protective equipment such as dust mask, non-skid safety shoes, hard hat, or hearing protection used for appropriate conditions will reduce personal injuries.*

c) Prevent unintentional starting. Ensure the switch is in the off position before connecting battery pack and/or to power source, picking up or carrying the machine. *Carrying machines with your finger on the switch or energizing machines that have the switch on invites accidents.*

d) Remove any adjusting key or wrench before turning the machine on. *A wrench or a key left attached to a moving part of*

machine may result in personal injury.

e) Do not overreach. Keep proper footing and balance at all times. *This enables better control of the machine in unexpected situations.*

f) Dress properly. Do not wear loose clothing or jewelry. Keep your hair, clothing, and gloves away from moving parts. *Loose clothes, jewelry, or long hair can be caught in moving parts.*

g) If devices are provided for the connection of dust extraction and collection facilities, ensure these are connected and properly used. *Use of these devices can reduce dust-related hazards.*

h) Do not let familiarity gained from frequent use of tools allow you to become complacent and ignore tool safety principles. *A careless action can cause severe injury within a fraction of a second.*

● Machine use and care

a) Do not force the machine. Use the correct machine for your application. *The correct machine will do the job better and safer at the rate for which it was designed.*

b) Do not use the machine if the switch does not turn it on and off. *Any machine that cannot be controlled with the switch is dangerous and must be repaired.*

c) Remove the battery pack from the machine before making any adjustments, changing accessories, or storing machines. *Such preventive safety measures reduce the risk of starting the power tool accidentally.*

d) Store idle machines out of the reach of children and do not allow persons unfamiliar with the machine or these instructions to operate the machine. *Machines are dangerous in the hands of untrained users.*

e) Maintain machines and accessories. Check for misalignment or binding of moving parts, breakage of parts, and any other condition that may affect the machine's operation. If damaged, have the machine repaired before use. *Many accidents are caused by poorly maintained machines.*

f) Keep cutting tools sharp and clean. *Properly maintained cutting tools with sharp cutting edges are less likely to bind and are easier to control.*

g) Use the machine, accessories, and tool bits etc. in accordance with these instructions, taking into account the working conditions and the work to be performed. Use of the machine for operations different from those intended could result in a hazardous situation.

h) Keep handles and grasping surfaces dry, clean, and free

from oil and grease. *Slippery handles and grasping surfaces do not allow for safe handling and control of the tool in unexpected situations.*

● Battery tool use and care

a) Recharge only with the charger specified by the manufacturer. *A charger that is suitable for one type of battery pack may create a risk of fire when used with another battery pack.*
b) Use machines only with specifically designated battery packs. *Use of any other battery packs may create a risk of injury and fire.*
c) When battery pack is not in use, keep it away from other metal objects, like paper clips, coins, keys, nails, screws, or other small metal objects, which can make a connection from one terminal to another. *Shorting the battery terminals together may cause burns or a fire.*
d) Under abusive conditions, liquid may be ejected from the battery; avoid contact. If contact accidentally occurs, flush with water. If liquid contacts eyes, additionally seek medical help. *Liquid ejected from the battery may cause irritation or burns.*
e) Do not use a battery pack or tool that is damaged or modified. *Damaged or modified batteries may exhibit unpredictable behavior resulting in fire, explosion, or risk of injury.*
f) Do not expose a battery pack or tool to fire or excessive temperature. *Exposure to fire or temperature above 212°F(100 °C) may cause explosion.*
g) Follow all charging instructions and do not charge the battery pack or tool outside the temperature range specified in the instructions. *Charging improperly or at temperatures outside the specified range may damage the battery and increase the risk of fire.*

● Service

a) Contact PRORUN Customer Service with questions or issues with this machine. *This will ensure that the safety of the power tool is maintained.*
b) Never service damaged battery packs. *Service of battery packs should only be performed by the manufacturer or authorized service providers.*

⚠ **WARNING: Read all instructions before using this appliance.**

⚠ **WARNING: When using electric gardening appliances, basic safety precautions should always be followed to reduce the risk of fire, electric shock, and personal injury, including the following:**

• Training

a) Read the instructions carefully. *Be familiar with the controls and the correct use of the machine.*

b) Keep in mind, that the operator or user is responsible for accidents or hazards occurring to other people or their property.

• Preparation

a) This machine is designed for maintaining lawns and gardens in the manner and in the conditions described in this manual. *Use of the machine for operations different than intended could result in serious injury or death.*

– Do not use it for any other purposes. Misuse may result in personal injury or property damage, including damage to the machine.

– Use the machine, battery, and charger only as described in this manual.

2. SAFETY INSTRUCTIONS FOR CHAINSAW

● General chainsaw safety warnings:

a) Keep all parts of the body away from the saw chain when the chainsaw is operating. Before you start the chainsaw, make sure the saw chain is not contacting anything. *A moment of inattention while operating chainsaws may cause entanglement of your clothing or body with the saw chain.*

b) Always hold the chainsaw with your right hand on the rear handle and your left hand on the front handle. *Holding the chainsaw with a reversed hand configuration increases the risk of personal injury and should never be done.*

c) Hold the chainsaw by insulated gripping surfaces only, because the saw chain may contact hidden wiring. *Saw chains contacting a "live" wire may make exposed metal parts of the chainsaw "live'" and could give the operator an electric shock.*

d) Wear eye protection. Further protective equipment for hearing, head, hands, legs, and feet is recommended. *Adequate protective equipment will reduce personal injury from flying debris or accidental contact with the saw chain.*

e) Do not operate a chainsaw in a tree, on a ladder, from a rooftop, or any unstable support. *Operation of a chainsaw in this manner could result in serious personal injury.*

f) Always keep proper footing and operate the chainsaw only when standing on fixed, secure, and level surface. *Slippery or unstable surfaces may cause a loss of balance or control of the chainsaw.*

g) When cutting a limb that is under tension, be alert for spring back. *When the tension in the wood fibers is released, the spring-loaded limb may strike the operator and/or throw the chainsaw out of control.*

h) Use extreme caution when cutting brush and saplings. *The slender material may catch the saw chain and be whipped toward you or pull you off balance.*

i) Carry the chainsaw by the front handle with the chainsaw switched off and away from your body. When transporting or storing the chainsaw, always fit the guide bar cover. *Proper handling of the chainsaw will reduce the likelihood of accidental contact with the moving saw chain.*

j) Follow instructions for lubricating, chain tensioning and changing the bar and chain. *Improperly tensioned or lubricated chain may either break or increase the chance for kickback.*

k) Cut wood only. Do not use chainsaw for purposes not intended. For example: do not use chainsaw for cutting metal, plastic, masonry, or non-wood building materials. *Use of the chainsaw for operations different than intended could result in a hazardous situation.*

l) Do not attempt to fell a tree until you have an understanding of the risks and how to avoid them. *Serious injury could occur to the operator or bystanders while felling a tree.*

m) Follow all instructions when clearing jammed material, storing, or servicing the chainsaw. Make sure the switch is off and the battery pack is removed. *Unexpected actuation of the chainsaw while clearing jammed material or servicing may result in serious personal injury.*

● Causes and operator prevention of kickback:

Kickback may occur when the nose or tip of the guide bar touches an object, or when the wood closes in and pinches the saw chain in the cut.

Tip contact in some cases may cause a sudden reverse reaction, kicking the guide bar up and back towards the operator.

Pinching the saw chain along the top of the guide bar may push the guide bar rapidly back towards the operator.

Either of these reactions may cause you to lose control of the saw which could result in serious personal injury. Do not rely exclusively upon the safety devices built into your saw. As a chainsaw user, you should take several steps to keep your cutting jobs free from accident or injury.

Kickback is the result of chainsaw misuse and/or incorrect operating procedures or conditions and can be avoided by taking proper precautions as given below:

a) Maintain a firm grip, with thumbs and fingers encircling the chainsaw handles, with both hands on the saw and position your body and arm to allow you to resist kickback forces. *Kickback forces can be controlled by the operator if proper precautions are taken. Do not let go of the chainsaw.*

b) Do not overreach and do not cut above shoulder height. *This helps prevent unintended tip contact and enables better control of the chainsaw in unexpected situations.*

c) Only use replacement guide bars and saw chains specified by the manufacturer. *Incorrect replacement guide bars and saw chains may cause chain breakage and/or kickback.*

d) Follow the manufacturer's sharpening and maintenance instructions for the saw chain. *Decreasing the depth gauge height can lead to increased kickback.*

3. TRANSPORTING AND STORAGE

a) When transporting or storing the chainsaw always fit the guide bar cover. *Proper handling of the chainsaw will decrease the risk of personal injury from the blades.*

b) Unintentional starting may result in personal injury or property damage. *Remove the battery before inspecting the chainsaw or carrying out any cleaning, maintenance, or repair work, before storing, and any other time the chainsaw is not in use.*

c) Improper storage can result in unauthorized use, damage to the machine, battery and charger and an increased risk of fire, electric shock, and other personal injury or property damage.
– Before storing, always unplug the charger from the wall outlet and remove the battery.
– Store the machine, battery, and charger indoors in a dry, secure place out of the reach of children and other unauthorized users.

4. BATTERY AND BATTERY CHARGER

This section describes the battery and battery charger safety for your battery product.
Only use original batteries for products and only charge them in an original battery charger.

● Battery charger

The battery chargers, are only used for charging of PRORUN® 20V replacement batteries.
– This manual contains important safety and operating instructions for battery charger.
– Before using battery charger, read all instructions and cautionary markings on battery charger, and product using battery.
⚠ CAUTION! Charge only Li-ion batteries recommended by the manufacturer.
– Other types of batteries may burst causing personal injury and damage.
– If the shape of the plug does not fit the power outlet, use an attachment plug adapter of the proper configuration for the power outlet.
⚠ WARNING! Minimize the risk of electric shock or short circuit as follows:
– Never insert any object into the charger's cooling slots. Do not try to dismantle the battery charger.
– Never connect the charger terminals to metal objects as this can short circuit the battery charger.
– Use approved and intact wall sockets.
⚠ WARNING! This machine produces an electromagnetic field during operation. This field may under some circumstances interfere with active or passive medical implants. To reduce the risk of serious or fatal injury, we recommend persons with medical implants consult their physician and the medical implant manufacturer before operating this machine. Do not use product when a thunderstorm is approaching.
– Unplug the charger from the wall outlet before inspecting or cleaning the charger.

– Regularly check that the battery charger connection wire is intact and that there are no cracks in it. Replace the charger if the power supply cord becomes worn or damaged. The power supply cord cannot be repaired or replaced.
– Never carry the battery charger using the cord and never pull out the plug by pulling the cord.
– Keep all cords and extension cords away from water, oil, and sharp edges. Make sure the cord is not pinched in doors, fences, or the like. Otherwise, it can cause the object to become live.
– Never clean the battery or the battery charger with water.
– Never allow the children to use the battery charger.
When charging, the charger must be placed in a well-ventilated area and under a roof to keep out moisture.
⚠ **WARNING! Do not charge non-rechargeable batteries in the battery charger or use them in the machine.**
⚠ **WARNING! Do not use the battery charger close to corrosive or flammable materials. Do not cover the battery charger. Pull out the plug to the battery charger in the event of smoke or fir. Risk of fire**.
– Use the battery charger only when the surrounding temperature is between 41 °F(5 °C) and 113 °F (45 °C). Use the charger in an environment which is well ventilated, dry, and free from dust.
Do not use:
– A faulty or damaged battery charger
– The battery in the battery charger outdoors.
Do not charge:
– Or never use a faulty, damaged, or deformed battery.
– The battery in the rain or in wet conditions.
– The battery in direct sunlight.
– The battery in the battery charger outdoors.

● Battery

– Do not dismantle, open or shred secondary batteries.
– Keep batteries out of the reach of children.
– Do not expose batteries to heat or fire. Avoid storage in direct sunlight.
– Do not short-circuit a battery. Do not store batteries haphazardly in a box or drawer where they may short-circuit each other or be short-circuited by other metal objects.
– Do not remove a battery from its original packaging until required for use.
– Do not subject batteries to mechanical shock.
– In the event of a cell leaking, do not allow the liquid to come in contact with the skin or eyes. If contact has been made, wash the affected area with copious amounts of water and seek medical

advice.
– Do not use any charger other than that specifically provided for use with the equipment.
– Do not use any battery which is not designed for use with the equipment.
– Always purchase the battery recommended by the device manufacturer for the equipment.
– Keep batteries clean and dry.
– Wipe the battery terminals with a clean dry cloth if they become dirty.
– Secondary batteries need to be charged before each use. Always use the correct charger and refer to the manufacturer's instructions or equipment manual for proper charging instructions.
– Do not leave a battery on prolonged charge when not in use.
– After extended periods of storage, it may be necessary to charge and discharge the batteries several times to obtain maximum performance.
– Retain the original product literature for future reference.
– Use the battery only in the application for which it was intended.
When possible, remove the battery from the equipment when not in use.
– Dispose of properly.

5. SYMBOLS

This page depicts and describes safety symbols that may appear on this product. Read, understand, and follow all instructions on the machine before attempting to assemble and operate it.

	Safety Alert	Because a chainsaw is a high-speed cutting tool, special safety precautions must be observed to reduce the risk of personal injury.
	Read the Operation's Manual	It is important that you read, fully understand, and observe the following safety precautions and warnings. Read the instruction manual and the safety precautions periodically.
	Do not expose to rain	Protect the tool, battery, and charger from rain, water, liquids, and damp conditions. Keep the tool, battery, and charger dry.
	Do not use chain-saw one-handed	To reduce the risk of serious or fatal injury to the operator or bystanders from loss of control, never use the chain saw with one hand.
	Always use chain-saw two-handed	Always hold the chainsaw firmly with both hands when you are working. Place your left hand on the front handle and your right hand on the rear handle.
	Kickback warning	Beware of chainsaw kickback and avoid contact with bar tip.

	Wear eye, ear, and head protection	To reduce the risk of injury to you, always wear safety goggles or safety glasses, sound barriers and safety hard hat when operating this product.
	Wear protective gloves	Always wear heavy duty nonslip gloves when handling the machine.
	Wear safety footwear	Wear sturdy boots with nonslip soles. Never wear sandals, flip-flops or go barefoot.
	Remove the battery	Remove the battery from chainsaw before cleaning or maintenance.
	Chain brake marking	Shows the directions that the chain brake is released (white arrow) and activated (black arrow).
	Chain direction marking	Shows the direction of the saw chain installation.
	Chain oil marking	The port to replenish the chain oil.
	Never expose to fire	Risk of fire, explosion and/or burns, including chemical burns. Never incinerate or place the battery on or near fires, stoves, or other high-temperature locations.
	Never heat the battery	Do not disassemble, crush, heat above 212°F (100°C). Never expose the battery to high pressures.
	Never immerse in water	To reduce the risk of personal injury or property damage from a short circuit, fire, or explosion. Never immerse the battery in water or other liquids.
	Recycling	Take the chainsaw, charger, accessories, and packaging to an approved disposal site for environmentally friendly recycling.
	Waste	Symbols on the product or its packaging indicate that this product cannot be handled as domestic waste.This product must be deposited at an appropriate recycling facility.
	Indoor use only	Use and store charger only indoors in dry rooms.
	Fail-safe transformer	For safer electronic isolation.
	Double insulated	To reduce electric shock protection.

Below units may be used in manual:

V	Volts	Voltage
A	Amperes	Current
Hz	Hertz	Frequency(cycles per second)
W	Watts	Power
min	Minutes	Time

mm	Millimeter	Length or size
in.	Inch	Length or size
Kg	Kilogram	Weight
Lbs.	Pound	Weight
RPM	Revolutions per minute	Rotational speed

⚠ **DANGER! People with electronic devices, such as pacemakers, should consult their physician(s) before using this product.** Operation of electrical equipment in close proximity to a heart pacemaker could cause interference or failure of the pacemaker.

6. SPECIFICATIONS

Motor

Type	**BLDC (brushless)**
Lubrication system	
Oil tank capacity	4.39 oz. (0.13 liter)
Weight	
Chain saw without battery, bar and chain, empty chain oil tank	6.61 Lbs. (3 Kg)
Chain/bar	
Recommended bar lengths	10 - 12 inches (25 - 35 cm)
Usable cutting length	8.5 - 10.6 inches (22 - 27 cm)
Drive sprocket type/teeth	**Spur/6**
Maximum chain speed	7.8 MPH (7.8 m/s)

Sound Levels

Sound pressure level, measured according to EN 60745-1 and EN60745-2-13,dB(A)	**79.1，K=3**
Sound power level, measured according to ISO22868,dB(A)	**97.9，K=3**
Guaranteed Sound power level, dB(A)	**100**

Vibration Levels

Vibration ,measured according to ISO 22867，m/s^2，front/rear handle	**3.31/3.88，K=1.5**

Approved batteries for PCS120	
Battery	PB12040
Type	Lithium-ion
Battery capacity, Ah	4.0
Voltage, V	20
Weight, kg	0.64

Approved charger for the specified batteries, PB12040	
Battery charger	PC120
Input Voltage, V	100-240
Frequency, Hz	50-60
Power, W	43.2W(Max)

7. KNOW YOUR CHAINSAW

Components and Controls

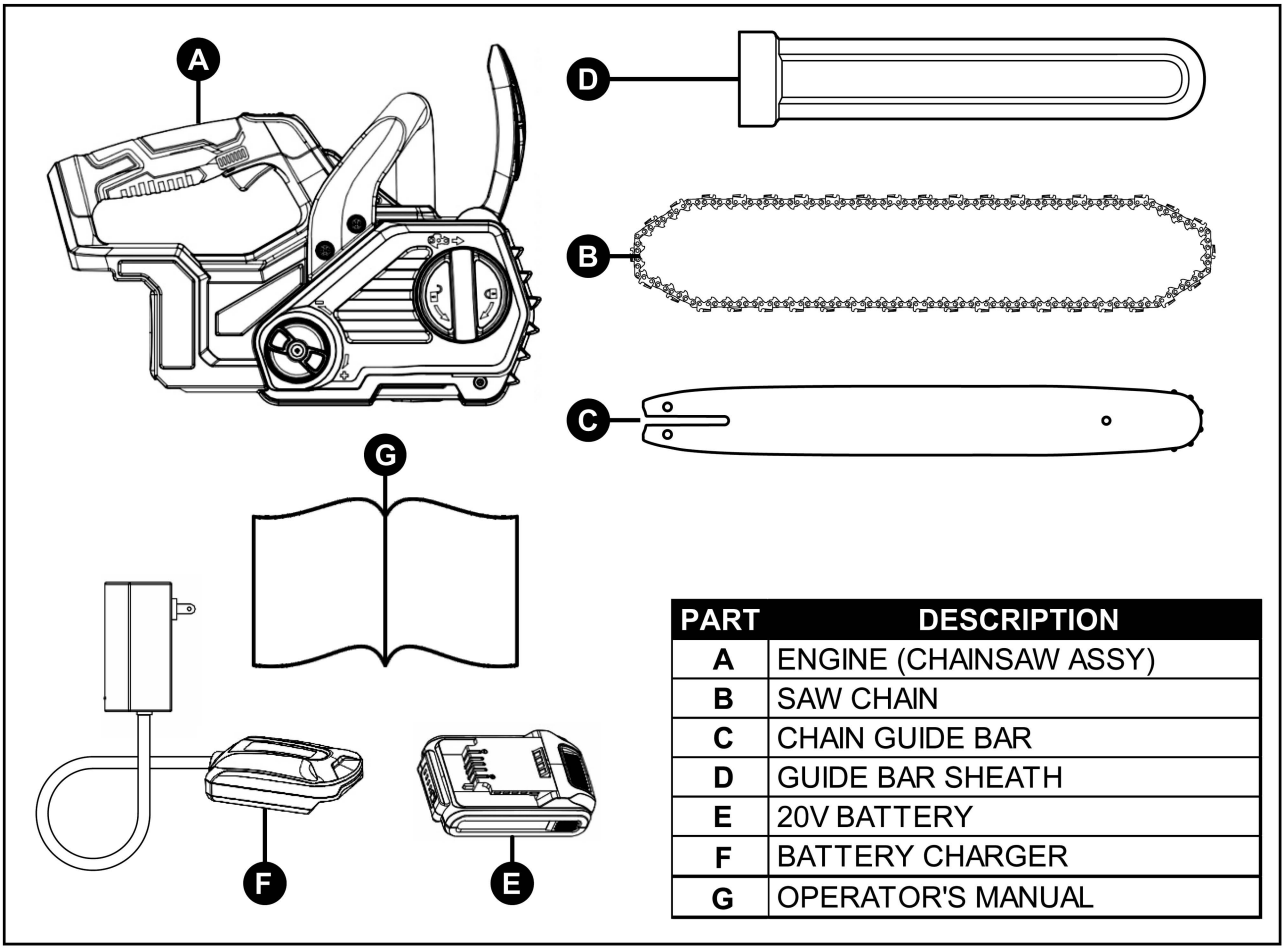

PART	DESCRIPTION
A	ENGINE (CHAINSAW ASSY)
B	SAW CHAIN
C	CHAIN GUIDE BAR
D	GUIDE BAR SHEATH
E	20V BATTERY
F	BATTERY CHARGER
G	OPERATOR'S MANUAL

7. KNOW YOUR CHAINSAW

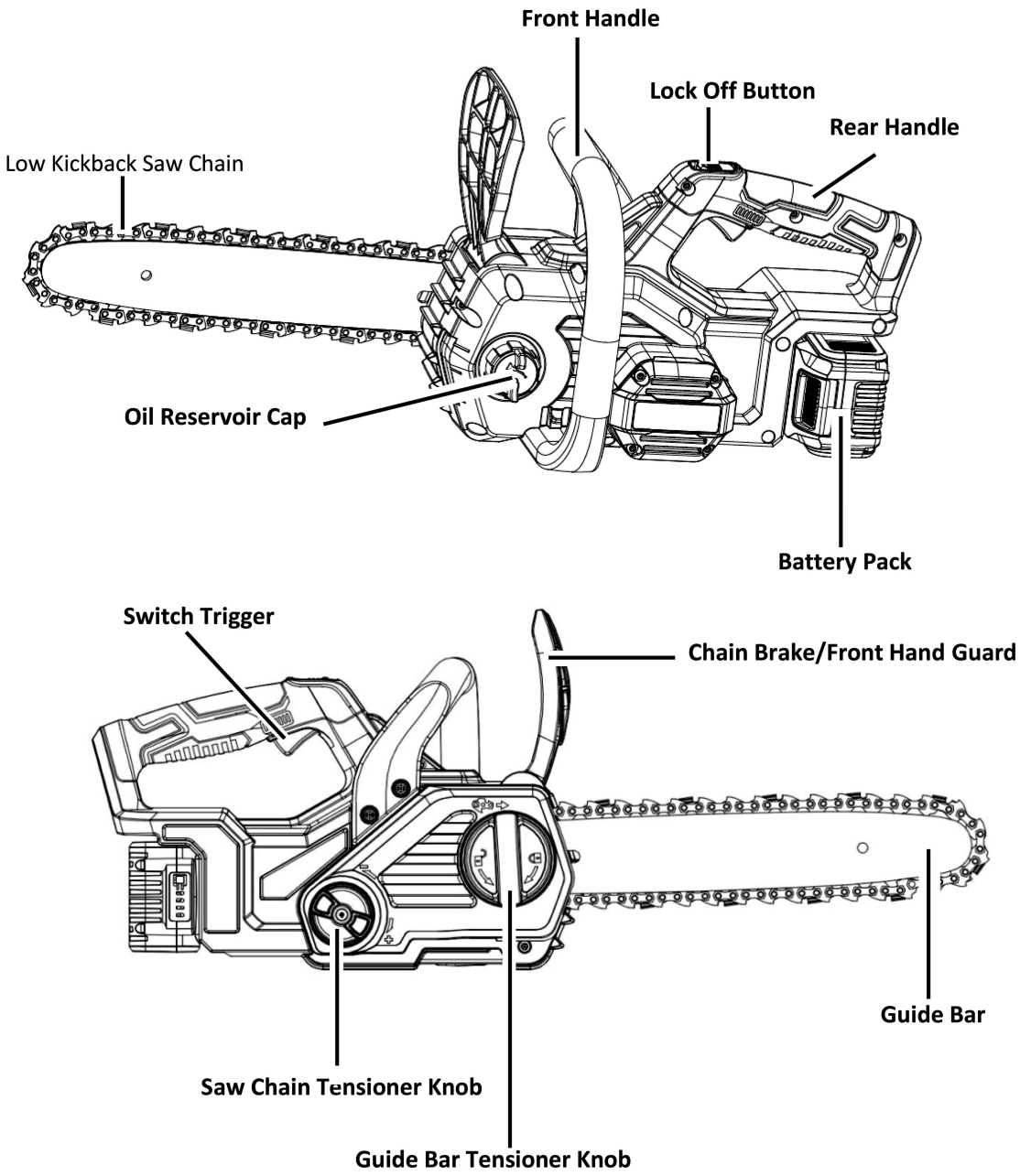

Fig.6

Chain brake and front hand guard(see figure6)

Your chain saw is equipped with a chain brake that is designed to stop the chain if you get a kickback. The chain brake reduces the risk of accidents, but only you can prevent them.

Chain catcher

The chain catcher is designed to catch the chain if it snaps or jumps off. This should not happen if the chain is properly tensioned and if the bar and chain are properly serviced and maintained.

8. BATTERY AND CHARGER OPERATION

This section describes the battery and battery charger safety for your battery product.

Only use PRORUN® original batteries for PRORUN products and only charge them in an original battery charger from PRORUN. The batteries are software encrypted.

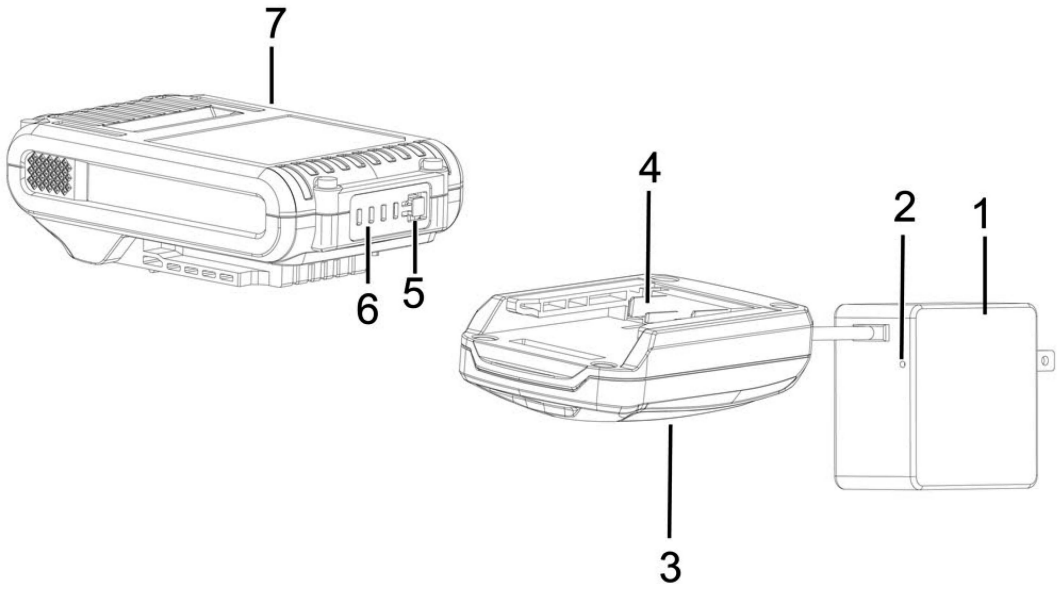

1. Electric plug
2. Charging indication LED
3. Battery charger
4. Electrical terminal
5. Electric energy button
6. Electric energy LED light
7. Battery

NOTE! The specifications of the plugs can be different by country, the picture is only for reference. If the shape of the plug does not fit the power outlet, use an attachment plug adapter of the proper configuration for the power outlet.

⚠ **WARNING! Risk of electric shock and short circuiting.** Use approved and intact wall sockets. Make sure that the power cord is not damaged. Replace power cord if it appears to be damaged in any way.

● Connect the battery charger

Connect the battery charger (3) to the voltage and frequency specified on the rating plate.

– Put the electric plug (1) in an earthed or grounded socket-outlet.

– The charging indication LED (2) will shine green indicating that the charger is working correctly.

– After 5 second, the light will turn off if no battery in the charger.

● Connect the battery to the battery charger

The battery(7) must be charged before using it the first time. The battery is only 30% charged when delivered.

NOTE! Monitor the charging process while charging a battery. It is recommended to remove the battery from the battery charger when the battery is full charged, or the charger is disconnected from the power supply.

– Align the raised ribs of the battery pack with the mounting slots in the charger; slide the battery battery into the charger and engage the battery with the charger's electrical terminals.

– The charger will communicate with the battery pack to evaluate the condition of the battery pack.

– While the battery pack is charging, the charger's indication LED will shine as follows to indicate the charging process and levels:



The charger's indication LED light shines consistently red when the battery is charging.



The charger's indication LED light shines consistently green when the battery is fully charged.



The battery will not be charged if the battery temperature is deviation. In that case the charger's indication LED light shines consistently green until the battery cool down or heat to normal temperature.



The battery will never be charged if the battery is damaged. In that case the charger's indication LED light shines consistently green

– The four LEDs on the battery pack indicate the current charged power level. Press the battery's electric energy button to check the power level of the battery.

– When the battery is full charged, the battery charger will stop charging (switch to stand by).

– It is recommended to remove the battery from the battery charger when the battery is fully charged, or the charger is disconnected from the power supply.

– Pull out the plug. Never use the power supply cable to disconnect the charger from the wall socket.

● Maintenance

– Make sure the battery and battery charger are clean and that the terminals on the battery and the battery charger are always clean and dry before the battery is placed in the battery charger.

– Keep the battery guide tracks clean. Clean plastic parts with a clean and dry cloth.

● Transport and storage

– Store the equipment in a lockable area so that it is out of reach of children and unauthorized persons.

– Store the battery and the battery charger in a dry, moisture-free and frost-free space.

– Store the battery where the temperature is between 14 °F (-10 °C) and 113 °F (45 °C) and never in direct sunlight.

– Store the battery charger only in an enclosed and dry space.

– Be sure to store the battery separate from the battery charger.

● Fault codes

LED display	Possible faults	Possible action
Charger LED shines consistently green but battery electric energy LED light indicates no increase in charge.	The battery is ok, but temperature deviation.	Charge the battery in surroundings where temperatures are between 32°F (0 °C) and 104°F (40 °C). Wait for the battery cool down.
Charger LED shines consistently green but battery electric energy LED light indicates no increase in charge.	Battery is damaged. Charger is damaged.	Contact PRORUN Customer Service.

9. ASSEMBLY INSTRUCTIONS

UNPACKING

This product has been shipped completely assembled.

• Carefully remove the product and any accessories from the box. Make sure that all items listed in the packing list are included.

• Inspect the product carefully to make sure no breakage or damage occurred during shipping.

• Do not discard the packing material until you have carefully inspected and satisfactorily operated the product.



WARNING

If any parts are damaged or missing, do not operate this product until the parts are replaced. Failure to heed this warning could result in serious personal injury.



WARNING

Do not attempt to modify this product or create accessories not recommended for use with this product. Any such alteration or modification is misuse and could result in a hazardous conduction leading to possible serious personal injury.



WARNING

Do not insert the battery until assembly is complete. Failure to comply could result in accidental starting and possible serious personal injury.

10. OPERATIONS

ADDING BAR AND CHAIN LUBRICANT (See figure 7)

Use Bar and Chain Lubricant. It is designed for chains and chain oilers, and is formulated to perform over a wide temperature range with no dilution required.

NOTE: Chain saw comes from the factory with no bar and chain oil added. Level should also be checked after every 10 minutes of use and refilled as needed.

- Remove oil cap.
- Carefully pour the bar and chain oil into the tank.
- Wipe off excess oil.
- Check and fill the oil tank when quick view oil indicator is below the MIN .Line
- Repeat as needed.

NOTE: Do not use dirty, used or otherwise contaminated oils. Damage may occur to the bar or chain.

NOTE: There is form inserted inside the oil reservoir to fitter dirt and debris from the oil pump. **DO NOT remove the foam.**

NOTE: It is normal for oil to seep from the saw when not in use. To prevent seepage, empty the oil tank after each use then run for one minute. When storing the unit for a long period of time (three months or longer) be sure the chain is lightly lubricated; this will prevent rust on the chain and bar sprocket.

I M P O R T A N T

To preserve natural resources, please recycle or dispose of oil properly. Consult your local waste authority for information regarding available recycling and/disposal options.

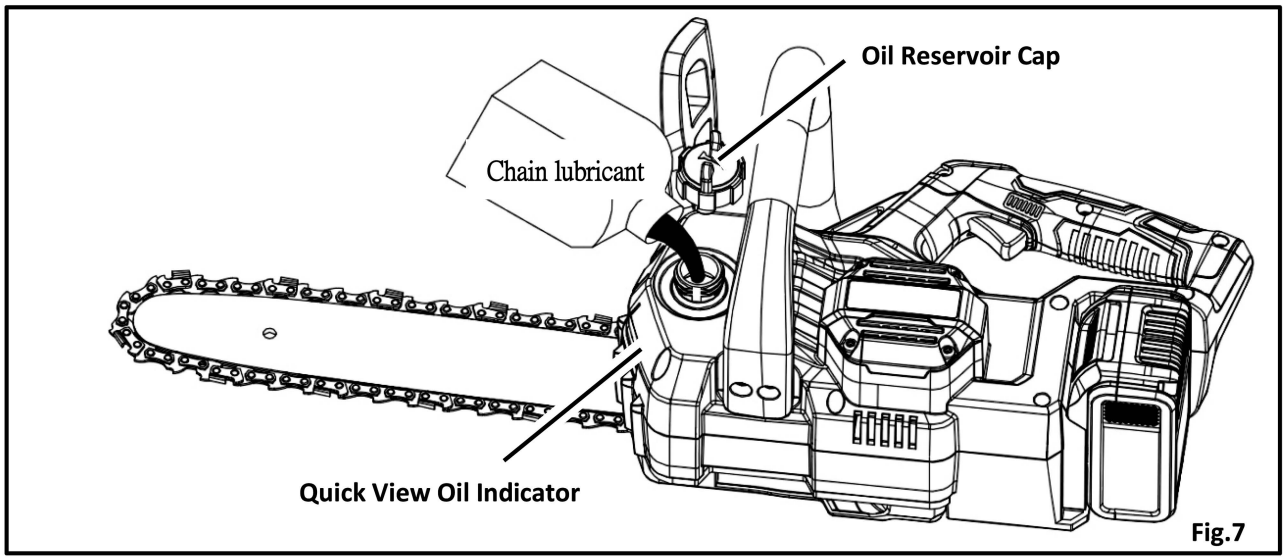

Fig.7

BATTERY PACK (See figure 8)

I M P O R T A N T

The battery pack is not charged when it is purchased. Before using the chain saw for the first time, place the battery pack in the battery charger and charge it fully. Be sure to read all safety precautions, and follow the instructions in the section entitled Charging Procedure. With regular use, the battery will require shorter charging times. When storing the chain saw for a prolonged period of time, remove the battery. When the chain saw is going to be used again, charge the battery pack for at least a full charging period. This product has no memory effect.

REMOVING THE BATTERY PACK

- Press the release button (1) on the battery pack down and hold.
- Grasp the handle (2) firmly, and pull the battery pack out of the handle.

Note: The battery pack fits into the handle snugly in order to prevent accidental dislodging. It may require a strong pull to remove it.

10. OPERATIONS

INSTALLING THE BATTERY PACK

• Align the tongue of the battery pack with the cavity.

• Grasp the handle (2) firmly.

• Push the battery pack into the handle until the latch locks into place.

• Do not use force when inserting the battery pack. It should slide into position and “click”.

WARNING

Follow these instructions in order to avoid injury and to reduce the risk of electric or fire:

• Replace the battery pack or the charger immediately if the battery case or charger cord is damaged.

• Verify that the switch is in the OFF position before inserting or removing the battery pack.

• Verify that the battery pack is removed and the switch is in the OFF position before inspecting, adjusting, or performing maintenance on any part of the chain saw.

• Read, understand, and follow the instructions contained in the section entitled Charging Procedure.

IMPORTANT

This Lithium-ion battery pack is equipped with an internal circuit breaker which will automatically shut off the power to the tool and then reset itself once cooled.

Follow these steps if an overload occurs while under heavy use:

• Release the power switch and restart tool by depressing switch.

• The battery may need to be removed for approximately 1 minute, allowed to cool and then reinstalled for use.

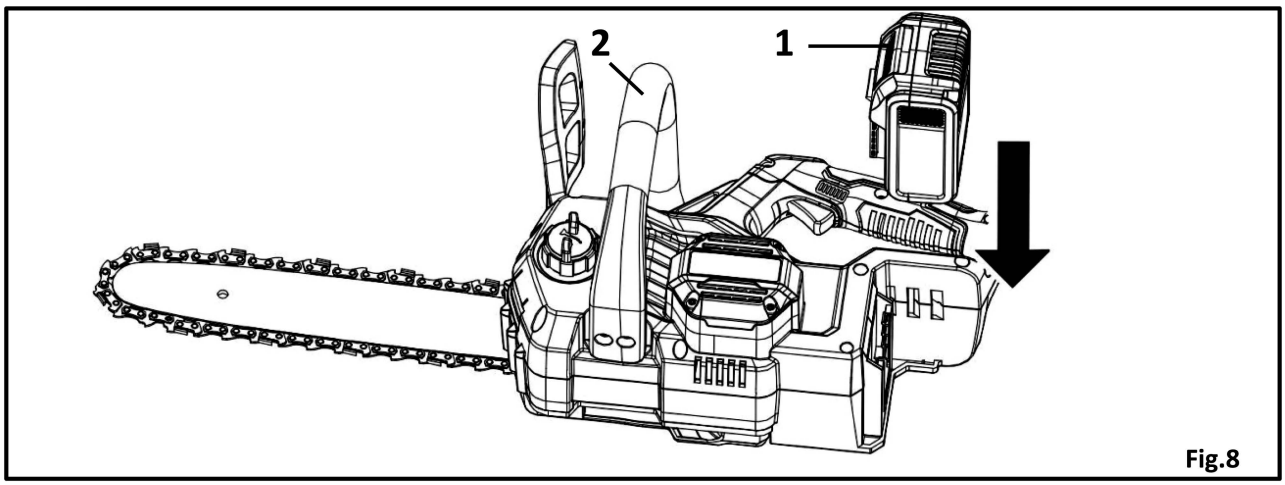

Fig.8

STARTING AND STOPPING THE CHAIN SAW (See figure 9)

WARNING

Keep body to the left of the chain line. Never straddle the saw or chain, or lean over past the chain line.

STARTING THE CHAIN SAW:

• Make sure chain tension is at desired setting. Refer to Adjusting the Chain Tension in the Maintenance of this manual.

• Make sure the chain cover lock bolt is tight to the chain cover.

• Make sure no objects or obstructions are in immediate vicinity which could come in contact with the bar and chain.

• Fit the battery pack into the chain saw .(see figure 8)

Note: If the Chain Saw makes a rapid beeping sound when attempting to start the saw, the chain brake is engaged. To start follow instructions above from the beginning.

• Depress the lock-off button and pull the switch trigger.

• Press and hold the switch trigger, release the switch lock and continue to squeeze the switch trigger for continued operation.

10. OPERATIONS

STOPPING THE CHAINSAW

NOTE: It is normal for the chain to coast to a stop once the trigger switch is released.

• Release the switch trigger to stop the chain saw.

• Upon release of the switch trigger, the switch lock will be automatically reset to the lock position.

OPERATING THE CHAIN BRAKE (See figure 10)

Check the operating condition of the chain brake prior to each use.

• Engage the chain brake by rotating your left hand around the front handle, allowing the back of your hand to push the chain brake lever/hand guard toward the bar while the chain is rotating rapidly. Be sure to maintain both hands on the saw handles at all times.

• Reset the chain brake back into the RUN position by grasping the top of the chain brake lever/hand guard and pulling toward the front handle.

W A R N I N G

If the chain brake do not stop the chain immediately, or if the chain brake will not stay in the run position without assistance, take the saw to an authorized service center for repair prior to use.

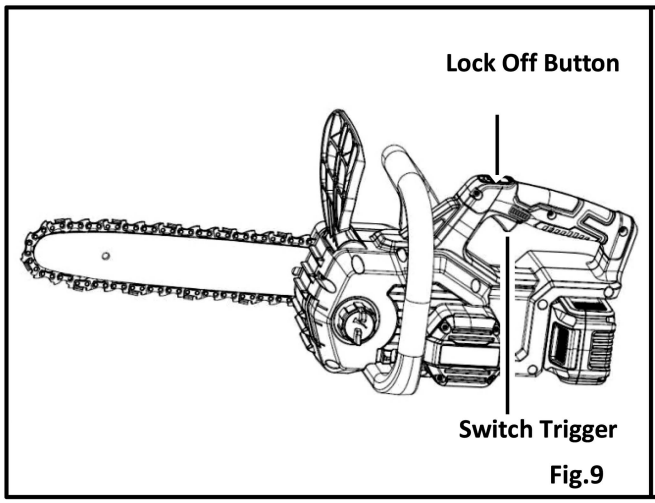

Fig.9

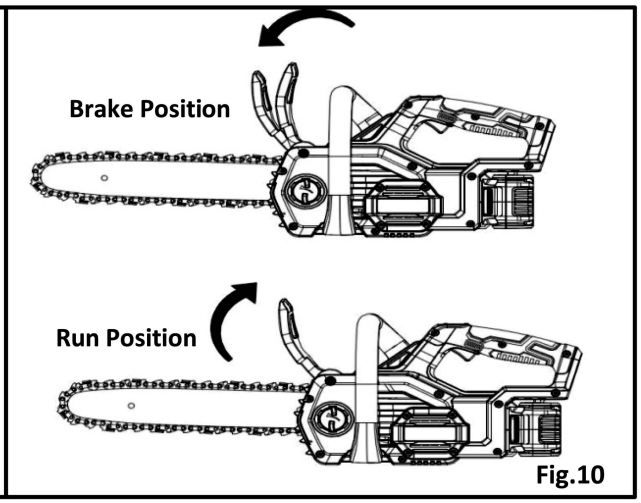

Fig.10

PREPARING FOR CUTTING

PROPER GRIP ON HANDLES (See figure 11)

See General Safety Rules for appropriate safety equipment.

• Wear non-slip gloves for maximum grip and protection.

•Hold the saw firmly with both hands. Always keep your left hand on the front handle and your right hand on the rear handles so that your body is to the left of the chain line.

•Maintain a proper grip on the saw whenever the motor is running. The finger should encircle the handle and the thumb is wrapped under the handlebar. This grip is least likely to be broken by a kickback or other sudden reaction of the saw. Any grip in which the thumb and fingers are on the same side of the handle is dangerous because a slight kick of the saw can cause loss of control.

W A R N I N G

Never use a left-handed (cross-handed) grip or any stance that would place your body or arm across the chain line.

10. OPERATIONS

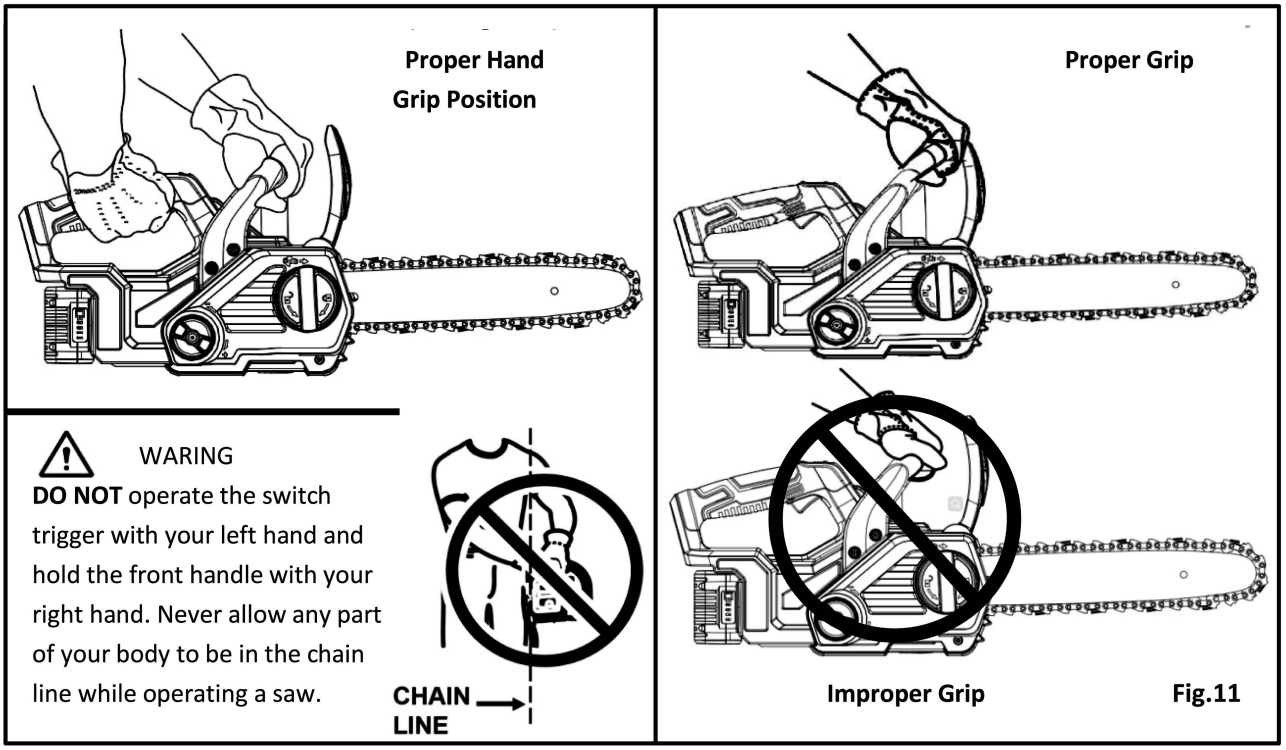

PROPER CUTTING STANCE (See figure 12)

- Balance your weight with both feet on solid ground.
- Keep left arm with elbow locked in a “straight arm” position to withstand any kickback force.
- Keep your body to the left of the chain line.
- Keep your thumb on underside of handlebar.

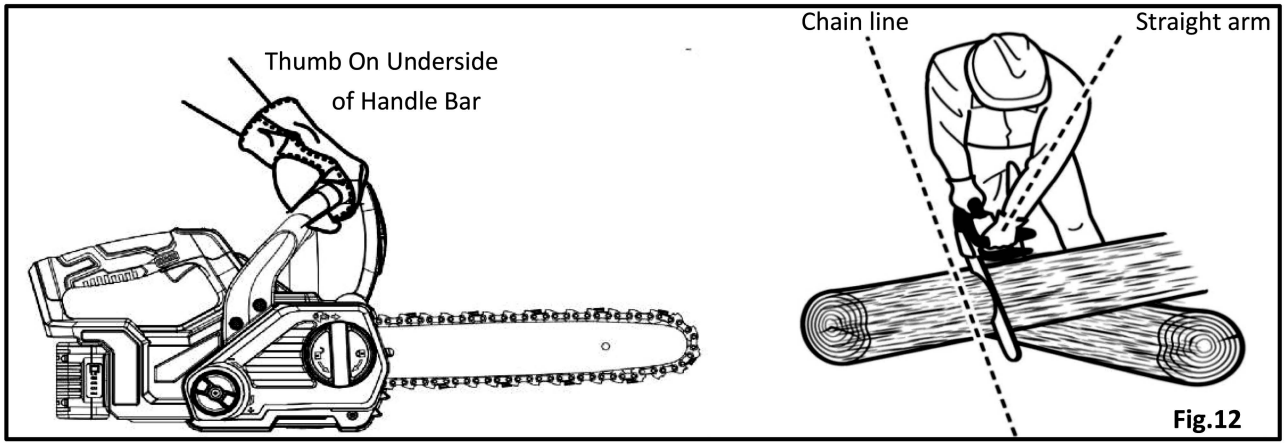

BASIC OPERATING/CUTTING PROCEDURES

Practice cutting a few small logs using the following technique to get the “feel” of using the saw before you begin a major sawing operation.

- Take the proper stance in front of the wood with the saw idling.
- Press the switch lock and squeeze the switch trigger then release switch lock and let the chain accelerate to full speed before entering the cut.
- Begin cutting with the saw against the log.
- Keep the unit running the entire time you are cutting, maintain a steady speed.
- Allow the chain to cut for you,exert only tight downward pressure. Forcing the cut could result in damage to the bar, chain, or motor.

10. OPERATIONS

• Release the switch trigger as soon as the cut is completed, allowing the chain to stop. If you run the saw without a cutting load, unnecessary wear can occur to the chain, bar, and unit.

• Do not put pressure on the saw at the end of the cut.

WORK AREA PRECAUTIONS (See figure 13)

• Cut only wood or materials made from wood; no sheet metal, no plastics, no masonry, no non-wood building materials.

• Never allow children to operate the saw. Allow no person to use this chain saw who has not read this operator's manual or received adequate instructions for the safe and proper use of this chain saw.

• Keep everyone – helpers, bystanders, children, and animals – a SAFE DISTANCE from the cutting area. During felling operations, the safe distance should be a least twice the height of the largest trees in the felling area. During bucking operations, keep a minimum distance of 15' (4.6 m) between workers.

• Always cut with both feet on solid ground to prevent being pulled off balance.

• Do not cut above chest height as a saw held higher is difficult to control against kickback forces.

• Do not fell trees near electrical wires or buildings. Leave this operation for professionals.

• Cut only when visibility and light are adequate for you to see clearly.



Fig.13

PROPER PROCEDURE FOR TREE FELLING (See figure 14-17)

• Felling a tree — When bucking and felling operations are being performed by two or more persons, at the same time, the felling operation should be separated from the bucking operation by a distance of at least twice the height of the tree being felled. Trees should not be felled in a manner that would endanger any person, strike any utility line or cause any property damage. If the tree does make contact with any utility line, the utility company should be notified immediately.

• Operator should keep on the uphill side of terrain as the tree is likely to roll or slide after it is felled.

•An escape path should be planned and cleared as necessary before cuts are started. The escape path should extend back and diagonally to the rear of the expected line of fall as illustrated in figure 14.

•Before felling is started, consider the force and direction of the wind, the lean and balance of the tree, and the location of large limbs. These things influence the direction in which the tree will fall. Do not try to fell a tree along a line different from its natural line of fall.

• Remove dirt, stones, loose bark, nails, staples, and wire from the tree where felling cuts are to be made.

• Notched Undercut. Make the notch 1/3 the diameter of the tree, perpendicular to the direction of falls as illustrated in figure 15. Make the lower horizontal notching cut first. This will help to avoid pinching either the saw chain or the guide bar when the second notch is being made.

• Felling Back Cut. Make the felling back cut at least 2 inches (50mm)higher than the horizontal notching cut as illustrated in figure 15. Keep the felling back cut parallel to the horizontal notching cut. Make the felling back cut so enough wood is left to act as a hinge. The hinge wood keeps the tree from twisting and falling in the wrong direction. Do not

10. OPERATIONS

cut through the hinge. As the felling gets close to the hinge, the tree should begin to fall. If there is any chance that the tree may not fall in desired direction or it may rock back and bind the saw chain, stop cutting before the felling back cut is complete and use wedges of wood, plastic or aluminium to open the cut and drop the tree along the desired line of fall. When the tree begins to fall remove the chain saw from the cut, stop the motor, put the chain saw down, then use the retreat path planned. Be alert for overhead limbs falling and watch your footing.

NOTE: Never cut through to the notch. Always leave a band of wood between the notch and back cut (approximately 2" (5 cm) or 1/10 the diameter of the tree). This is called “hinge” or “hinge wood.” It controls the fall of the tree and prevents slipping or twisting or shoot back of the tree off the stump.

• On large diameter trees, stop the back cut before it is deep enough for the tree to either fall or settle back on the stump. Then insert soft wooden or plastic wedges into the cut so they do not touch the chain. Drive wedges in, little by little, to help jack the tree over.

• As tree starts to fall, stop the chain saw and put it down immediately. Retreat along the cleared path, but watch the action in case something falls your way.

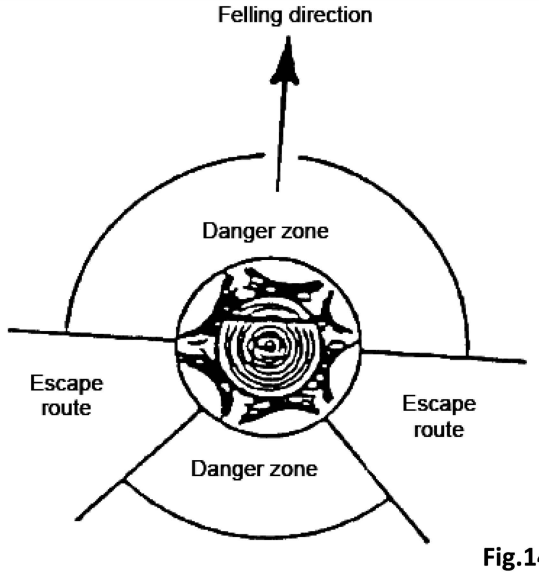

Fig.14

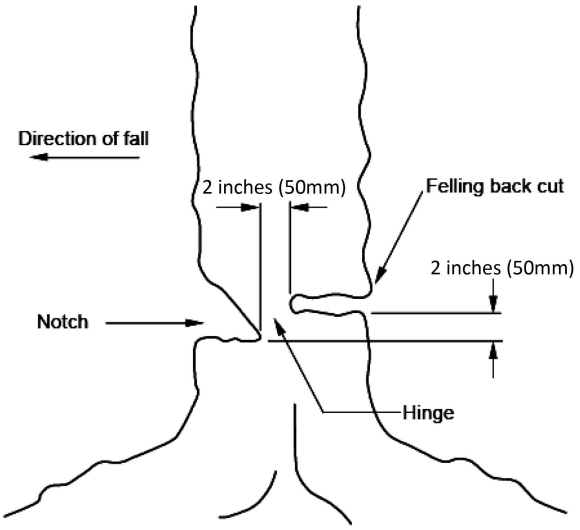

Fig.15

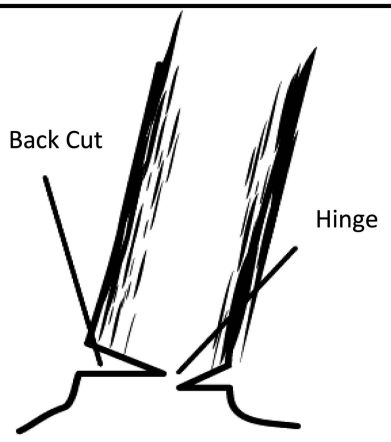

Fig.16


Wedge

Fig.17

BUCKING (See figure 18-21)

Bucking is cutting a log into lengths. It is important to make sure your footing is firm and your weight is evenly distributed on both feet. When possible, the log should be raised and supported by the use of limbs, logs or chocks. Follow the simple directions for easy cutting.

10. OPERATIONS

When the log is supported along its entire length ,it is cut from the top (over buck).

When the log is supported on one end, cut 1/3 the diameter from the underside (underbuck). Then make the finished cut by overbucking to meet the first cut.

When the log is supported on both ends , cut 1/3 the diameter from the top (overbuck). Then make the finished cut by underbucking the lower 2/3 to meet the first cut.

When bucking on a slope always stand on the uphill side of the log. When “cutting through”, to maintain complete control release the cutting pressure near the end of the cut without relaxing your grip on the chain saw handles. Don’t let the chain contact the ground. After completing the cut, wait for the saw chain to stop before you move the chain saw. Always stop the motor before moving from tree to tree.

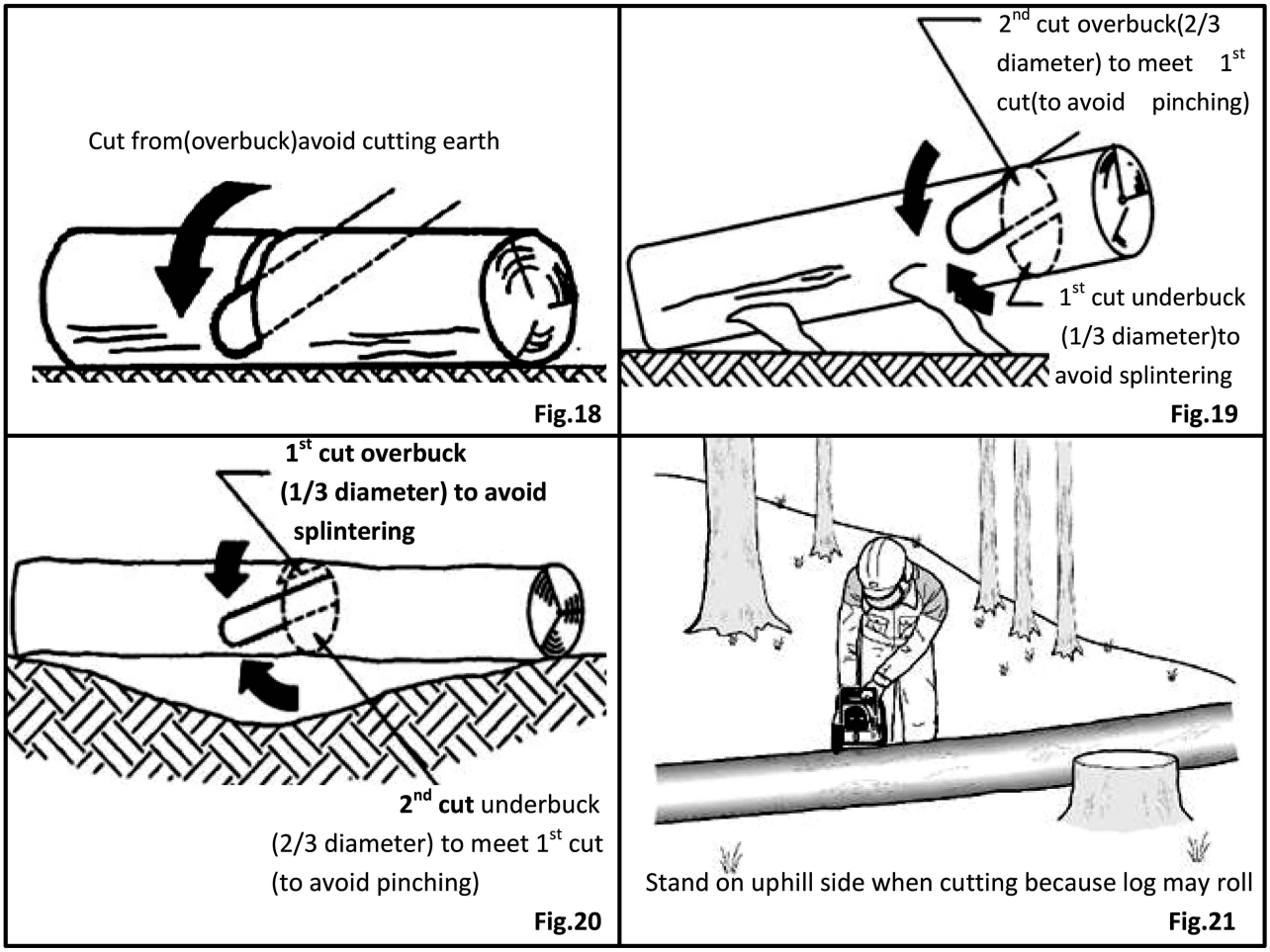

Cutting trees and branches that are in tension(see figure22-26)

Preparations: Work out which side is in tension and where the point of maximum tension is (i.e. where it would break if it was bent even more). Decide which is the safest way to release the tension and whether you are able to do it safely. In complicated situations the only safe method is to put aside your chain saw and use a winch.

General advice

•Position yourself so that you will be clear of the tree or branch when the tension is released. (see figure 22)

•Make one or more cuts at or near the point of maximum tension. Make as many cuts of sufficient depth as necessary to reduce the tension and make the tree or branch break at the point of maximum tension.(see figure 23)

10. OPERATIONS

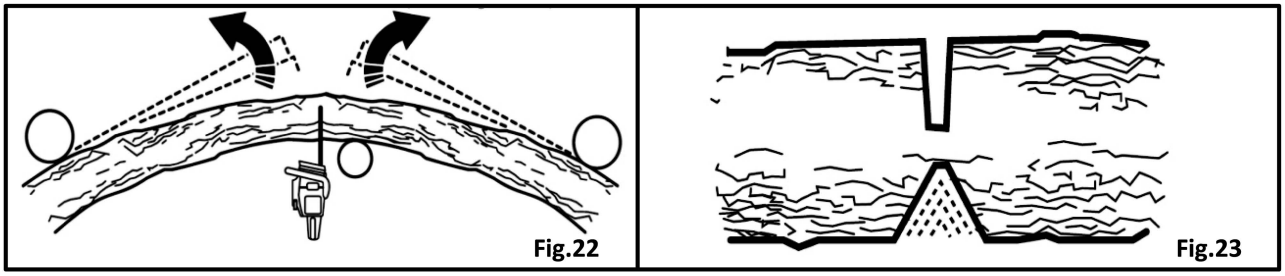
Fig.22

Fig.23

Never cut straight through a tree or branch that is in tension!

•If you must cut across tree/limb, make two to three cuts, one inch apart, one to two inches deep.(see figure 24)

•Continue to cut deeper until tree/limb bends and tension is released.

•Cut tree/limb from outside the bend, after tension has been released.(see figure25)

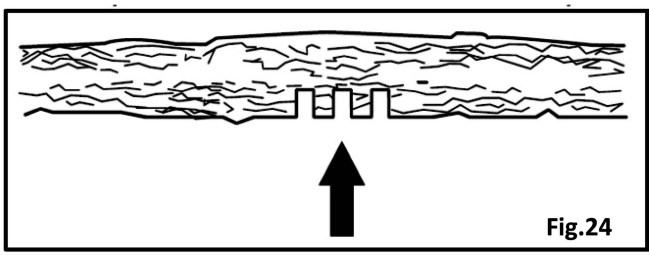
Fig.24

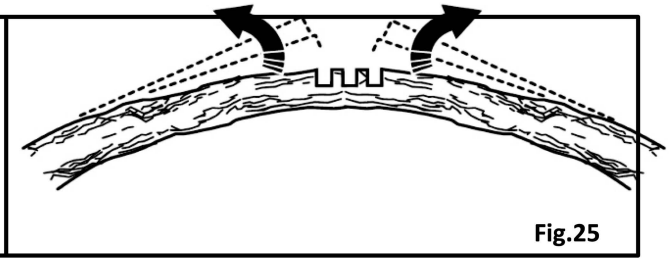
Fig.25

Limbing(see figure26)

W A R N I N G

A majority of kickback accidents occur during limbing. Do not use the kickback zone of the guide bar.

Be extremely cautious and avoid contacting the log, other limbs or objects with the nose of the guide bar. Be extremely cautious of limbs under tension. They can spring back toward you and cause loss of control resulting in injury.

When limbing, leave larger, lower limbs to support the tree off the ground. Limbs should be cut one at a time.

Branches under tension should be cut from the bottom up to avoid binding the chain saw.

Make sure that you can stand and move about safely. Work on the left side of the trunk. Work as close as possible to the chain saw for maximum control. If possible, let the weight of the chain saw rest on the trunk.

Keep the trunk between you and the chain saw as you move along the trunk.

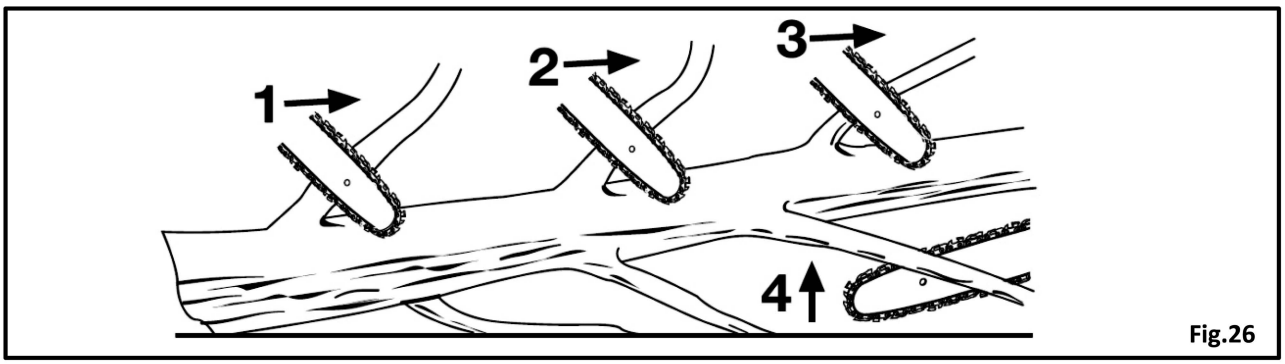

Fig.26

11. ENVIRONMENTAL PROTECTION

Waste electrical products should not be disposed of with household waste. Please recycle where facilities exist. Check with your Local Authority or retailer for recycling advice.

12. MAINTENANCE

WARNING

When servicing, use only identical replacement parts. Use of any other parts may create a hazard or cause product damage

WARNING

Always wear safety goggles or safety glasses with side shields during power tool operation or when blowing dust. If operation is dusty, also wear a dust mask.

GENERAL MAINTENANCE

Avoid using solvents when cleaning plastic parts. Most plastics are susceptible to damage from various types of commercial solvents and may be damaged by their use. Use clean cloths to remove dirt, dust, lubricant, grease, etc. firmly to maintain control.

REPLACING THE GUIDE BAR AND CHAIN(see figure27-34)

CAUTION

Always wear gloves when handling the bar and chain; these components are sharp and may contain burrs.

WARNING

Never touch or adjust the chain while the motor is running. The saw chain is very sharp; always wear protective gloves when performing maintenance to the chain to avoid possible serious lacerations.

NOTE: When replace the guide bar and chain ,always use the specified bar and chain listed in the Bar and Chain Combinations section later in this manual.

• Remove the battery from the chain saw.

• Rotate the chain cover lock knob anti clockwise and remove knob and sleeve .

• Remove the chain cover. Remove the bar and chain from the mounting surface. Remove the old chain from the bar. (see figure 28)

• Lay out the new saw chain in a loop and straighten any kinks. The cutters should face in the direction of chain rotation. If they face backwards, turn the loop over.

. Place the chain drive links into the bar groove. Position the chain so there is a loop at the back of the bar.

NOTE: Make certain of direction of chain.

• Hold the chain in position on the bar and place the loop around the sprocket. Fit the bar flush against the mounting surface so that the bar studs are in the long slot of the bar.

•When placing the bar on the bar studs, ensure that the adjusting pin is in the chain tension pin hole.

• Lift the tip of the guide bar up to check for sag.

-Release the tip of the guide bar and turn the chain tensioning wheel 1/2 turn clockwise. Repeat this process until sag does not exist.

NOTE: If chain is too tight, it will not rotate. Loosen the chain cover lock knob slightly and turn the chain tensioning wheel 1/4 turn anti clockwise. Lift the tip of the guide bar up and retighten the chain cover lock knob. Ensure that the chain will rotate without binding

• Replace the chain cover.

• Replace the sleeve and chain cover lock bolt,Turn the knob clockwise to tighten the drive sprocket cover. The bar should still be free to move for tension adjustment.

• Remove all slack from the chain by turning the chain tensioning wheel clockwise until the chain seats snugly against the bar with the drive links in the bar groove.

• Hold the tip of the guide bar up and tighten the chain cover lock bolt. The chain is correctly tensioned when there is no sag on the underside of the guide bar, the chain is snug, but it can be turned by hand without binding.

12. MAINTENANCE

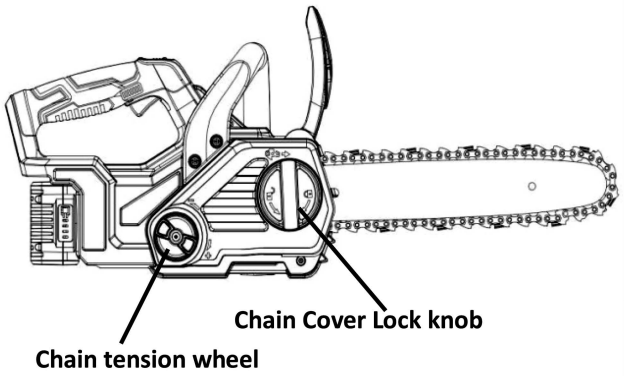

Fig.27

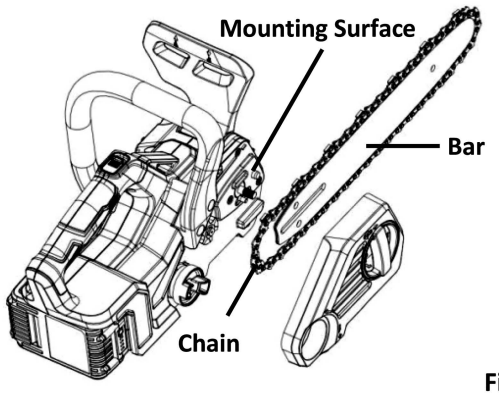

Fig.28

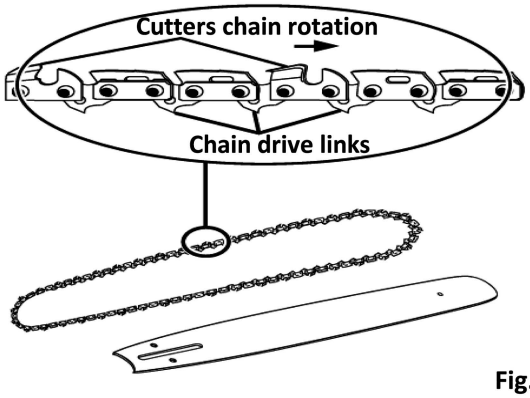

Fig.29

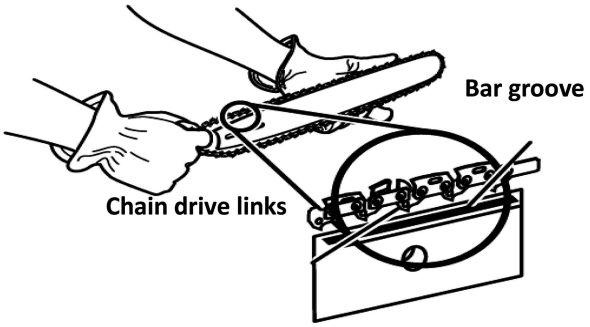

Fig.30

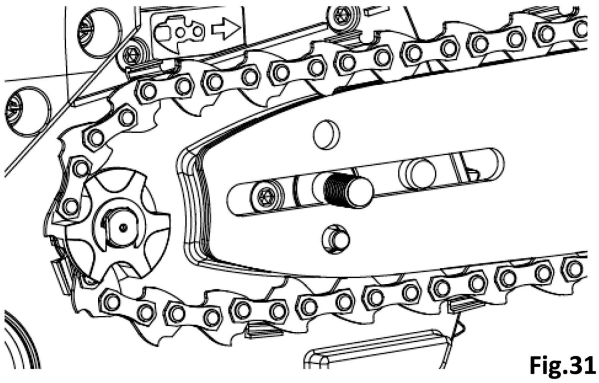

Fig.31

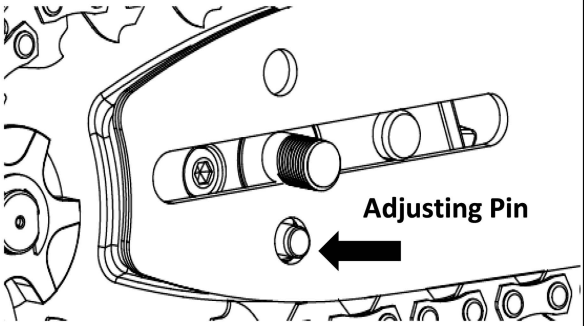

Fig.32

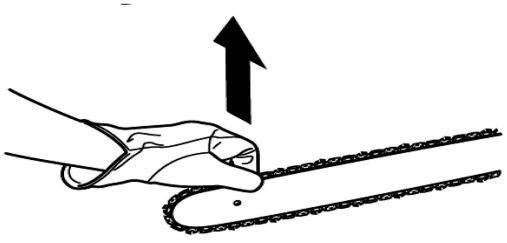

Fig.33

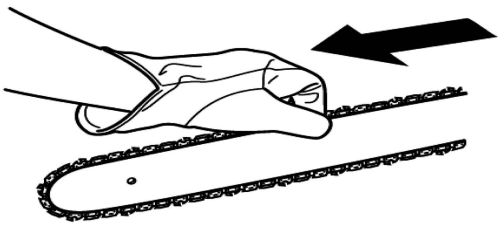

Fig.34

12. MAINTENANCE

ADJUSTING THE CHAIN TENSION (See figure 35)

W A R N I N G

A slack chain may jump off the bar and cause serious or even fatal injury.

Always remove the battery before any assembly, maintenance and/ or checking is done on the machine.

• The more you use a chain the longer it becomes. It is therefore important to adjust the chain regularly to take up the slack.

• Check the chain tension every time you refill with saw chain oil. NOTE! A new chain has a running-in period during which you should check the tension more frequently. Tension the chain as tightly as possible, but not so tight that you cannot pull it round freely by hand.

• Release the chain cover lock knob until it snaps open.

• Turn the knob anti clockwise to loosen the drive sprocket cover.

• Hold the knob and adjust the tension on the chain by turning the chain tensioner wheel down (+) for tighter tension and up (-) to loosen the tension.

• Tighten the chain cover by turning the knob clockwise.

• Withdraw the knob back in to lock the tensioning.

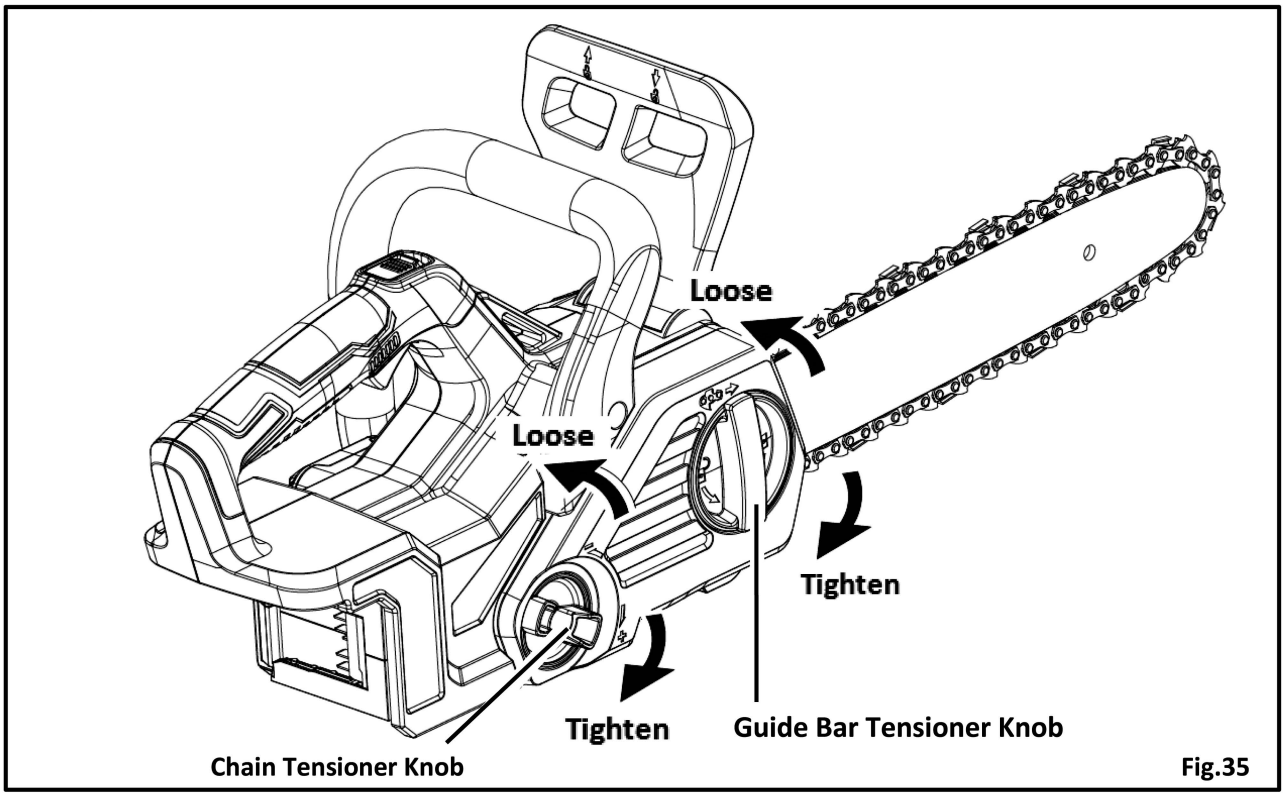

Fig.35

Lubricating cutting equipment

W A R N I N G

Poor lubrication of cutting equipment may cause the chain to snap, which could lead to serious, even fatal injuries.

Chain oil

Chain oil must demonstrate good adhesion to the chain and also maintain its flow characteristics regardless of whether it is warm summer or cold winter weather.

Never use waste oil! Using waste oil can be dangerous to you and damage the machine and environment.

IMPORTANT! When using vegetable based saw chain oil, dismantle and clean the groove in the bar and saw chain before long-term storage. Otherwise there is a risk of the saw chain oil oxidizing, which will result in the saw chain becoming stiff and the bar tip sprocket jamming.

12. MAINTENANCE

Filling with chain oil(see figure36)

• All our chain saws have an automatic chain lubrication system. On some models the oil flow is also adjustable

• The saw chain oil tank is designed to last approximately three battery charges. However, this safety feature requires that you use the right sort of chain oil (if the chain oil is to thin it will last shorter time).

• Never use waste oil. This results in damage to the oil pump, the bar and the chain.

• It is important to use oil of the right grade (suitable viscosity range) to suit the air temperature.

• In temperatures below 32℉ (0℃) some oils become too viscous. This can overload the oil pump and result in damage to the oil pump components.

• Contact your service agent when choosing chain oil.

Checking chain lubrication(see figure37)

• Check the chain lubrication every third battery charge. See instructions under the heading Lubricating the bar tip sprocket. See instructions under the heading Lubricating the bar tip sprocket. Aim the tip of the bar at a light coloured surface about 20 cm (8 inches) away. After 1 minute running at 3/4 throttle you should see a distinct line of oil on the light surface.

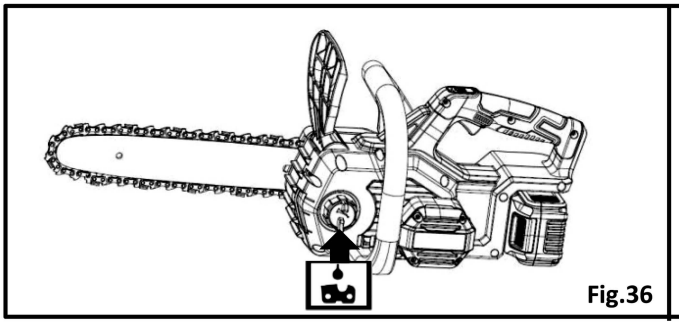

Fig.36



Fig.37

If the chain lubrication is not working:(see figure38)

• Check that the oil channel in the bar is not obstructed. Clean if necessary.

• Check that the groove in the edge of the bar is clean. Clean if necessary.

• Check that the bar tip sprocket turns freely and that the lubricating hole in the tip sprocket is not blocked. Clean and lubricate if necessary.

If the chain lubrication system is still not working after carrying out the above checks and associated measures you should contact your servicing dealer.

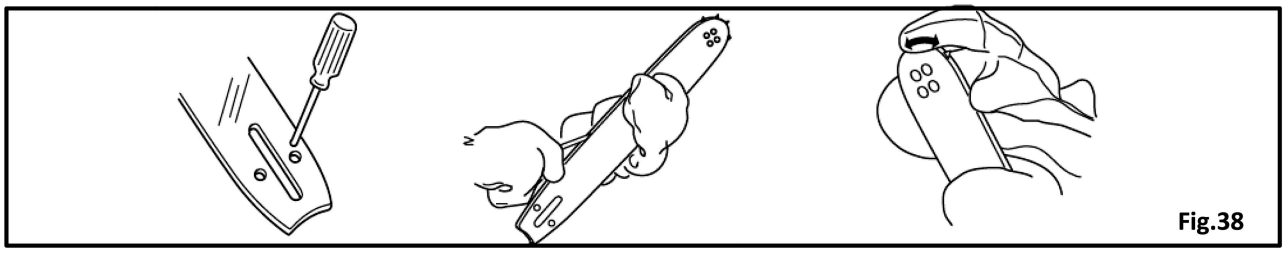

Fig.38

CHAIN MAINTENANCE (See figure 39)

Use only a low-kickback chain on this saw. This fast-cutting chain provides kickback reduction when properly maintained. For smooth and fast cutting, maintain the chain properly. The chain requires sharpening when the wood chips are small and powdery, the chain must be forced through the wood during cutting, or the chain cuts to one side. During maintenance of the chain, consider the following:

Improper filling angle of the side plate can increase the risk of severe kickback.

• Rake(depth gauge) clearance.

• Too low increases the potential for kickback.

• Not low enough decreases cutting ability.

12. MAINTENANCE

• If the cutter teeth hit hard objects such as nails and stones, or are abraded by mud or sand on the wood, have an authorized service center sharpen the chain.

NOTE: Inspect the drive sprocket for wear or damage when replacing the chain. If signs of wear or damage are present in the areas indicated, have the drive sprocket replaced by an authorized service center.

NOTE: If you do not fully understand the correct procedure for sharpening the chain after reading the instructions that follow, have the saw chain sharpened by an authorized service center or replace with a recommended low-kickback chain.

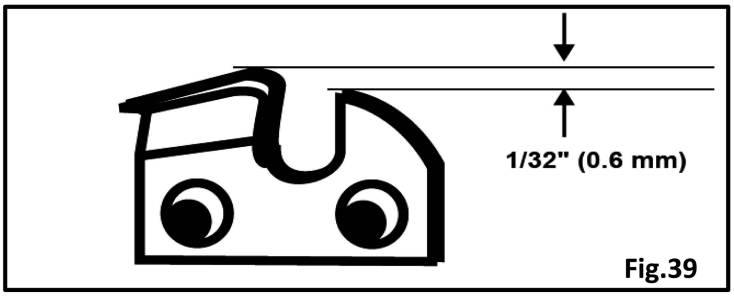

Fig.39

SHARPENING THE CUTTERS (See figure 40-43)

Be careful to file all cutters to the specified angles and to the same length, as fast cutting can be obtained only when all cutters are uniform.

C A U T I O N

Make sure the battery is removed from the chain saw before you work on the saw.

W A R N I N G

The saw chain is very sharp. Always wear protective gloves when performing maintenance to the chain to prevent serious personal injury:

• Tension the chain prior to sharpening. Refer to Adjusting The Chain Tension.

• Use a 5/32 inch (4mm) diameter round file and holder. Do all of your filling at the midpoint of the bar.

• Keep the file level with the top plate of the tooth. Do not let the file dip or rock.

• Using light but firm pressure. Stroke towards the front comer of the tooth.

• Lift the file away from the steel on each return stroke.

• Put a few firm strokes on every tooth. File all left hand cutters in one direction. Then move to the other side and file the right hand cutters in the opposite direction.

• Remove fillings from the file with a wire brush.

C A U T I O N

A dull or improperly sharpened chain can cause excessive motor speed during cutting, which may result in severe motor damage.

W A R N I N G

Improper chain sharpening increases the potential of kickback.

W A R N I N G

Failure to replace or repair a damaged chain can cause serious injury.

12. MAINTENANCE

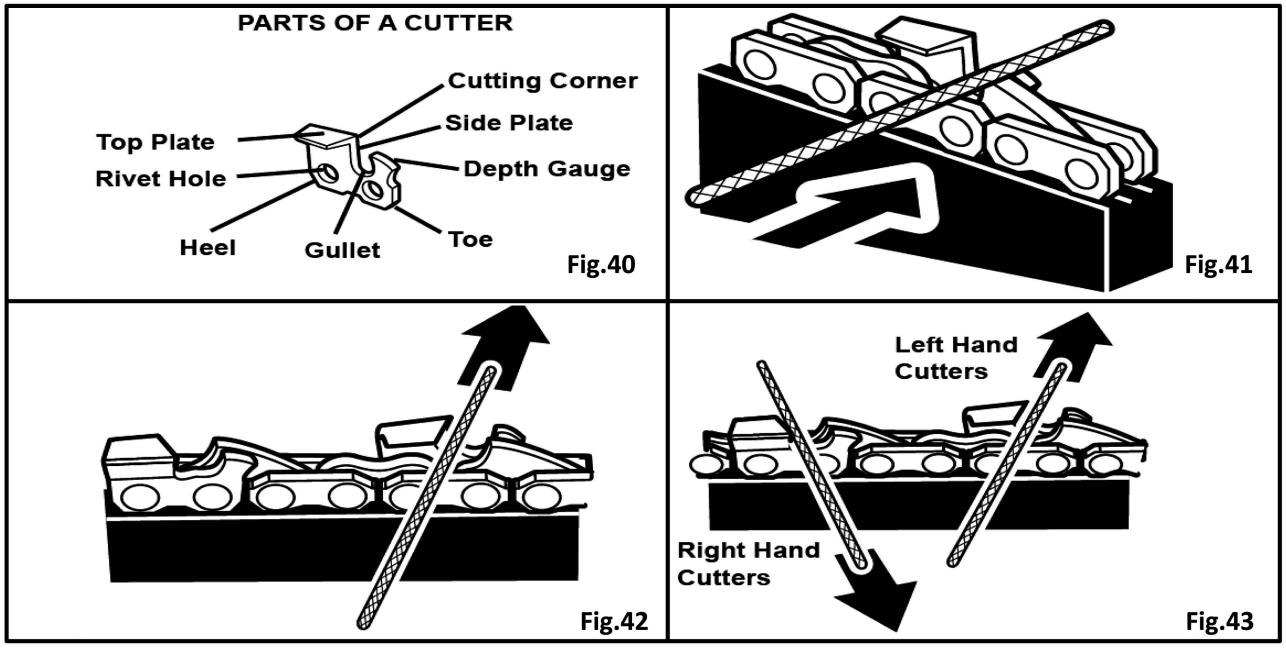

TOP PLATE FILING ANGLE (See figure 44)

- **CORRECT 30° – file holders are marked with guide marks to align file properly to produce correct top plate angle.**
- **LESS THAN 30° – for cross cutting.**
- **MORE THAN 30° –feathered edge dulls quickly.**

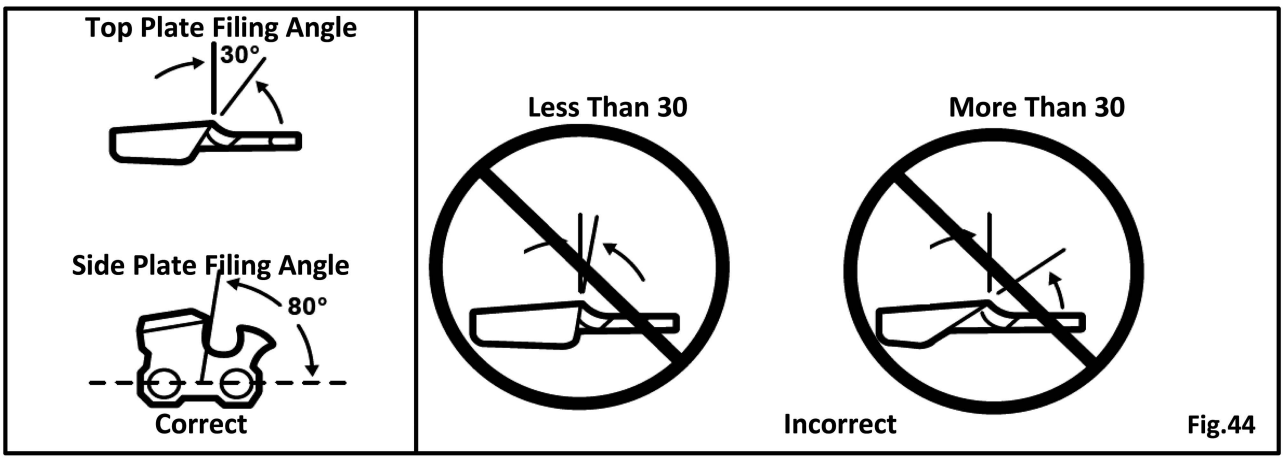

SIDE PLATE ANGLE (See figure 45)

- **Correct 80°-Produced automatically if you use the correct diameter file in the file holder.**
- **HOOK – "Grabs" and dulls quickly; increases the potential of KICKBACK. Results from using a file with a diameter too small or a file held too low.**
- BACKWARD SLOPE – Needs too much feed pressure; causes excessive wear to the bar and chain. Results from using a file with a diameter too large or file held too high.

SIDE PLATE ANGLE (See Figure 46-48)

- **Maintain the depth gauge at a clearance of 1/32" (0.6 mm) Use a depth gauge tool for checking the depth gauge clearances.**
- **Every time the chain is filed, check the depth gauge clearance.**
- **Use a flat file and a depth gauge jointer to lower all gauges uniformly. Use a 1/3''(0.6mm) depth gauge jointer. After lowering each depth gauge, restore original shape by rounding the front. Be careful not to damage adjoining drive links with the edge of the file.**

12. MAINTENANCE

• Depth gauges must be adjusted with the flat in the same direction the adjoining cutter was filed with the round file.

• Use care not to contact cutter face with flat file when adjusting depth gauges.

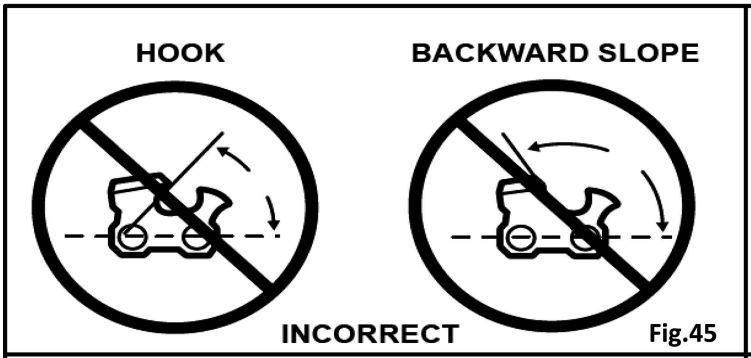

Fig.45

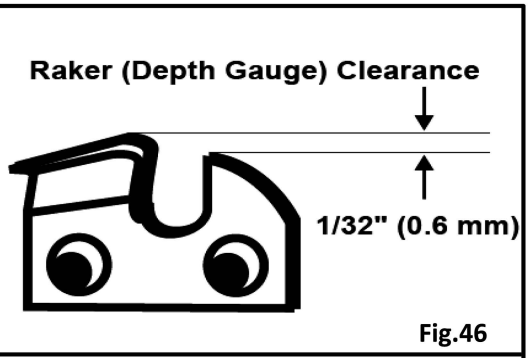

Fig.46

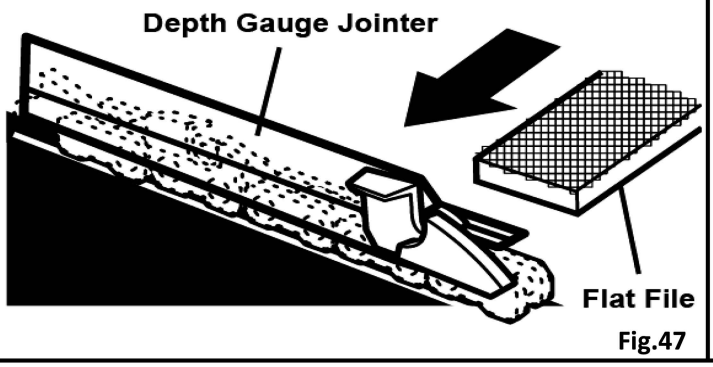

Fig.47

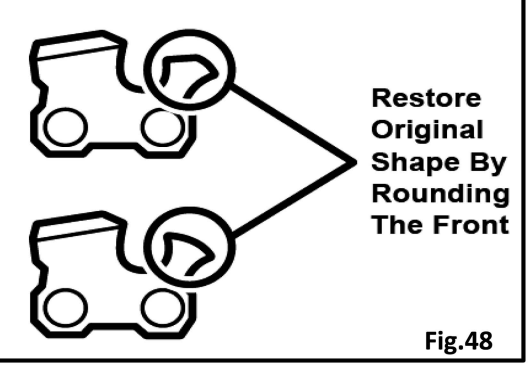

Fig.48

MAINTAINING THE GUIDE BAR (See figure 49)

Every week of use, reverse the guide bar on the saw to distribute the wear for maximum bar life. The bar should be cleaned every day of use and checked for wear and damage. Feathering or burring of the bar rails is a normal process of bar wear. Such faults should be smoothed with a file as soon as they occur. A bar with any of the following faults should be replaced:

• Wear inside the bar rails that permits the chain to lay over sideways

• Bent guide bar

• Cracked or broken rails

• Spread rails

Lubricate guide bars weekly with a sprocket at their tip. Using a grease syringe, lubricate weekly in the lubricating hole. Turn the guide bar and check that the lubrication holes and chain groove are free from impurities.

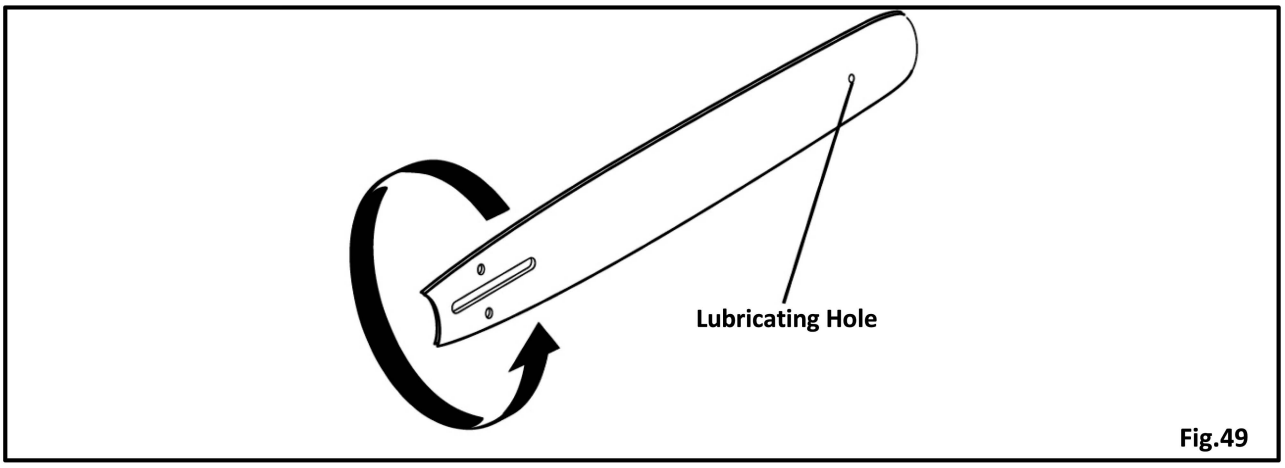

Fig.49

12. MAINTENANCE

Saw chain filing and file gauges.

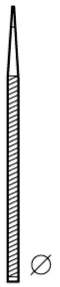 inch/mm	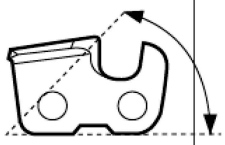	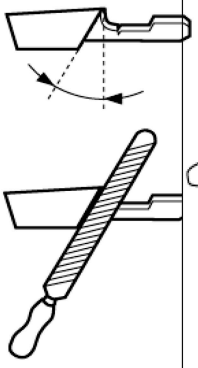		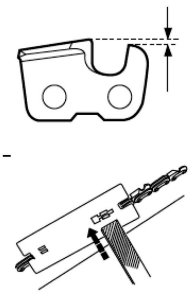
5/32'' 4mm	80	30	0	0.025''/0.65

12. MAINTENANCE

MAINTENANCE SCHEDULE

The following is a list of the maintenance that must be performed on the machine. Most of the items are described in the maintenance section.

Daily maintenance	Weekly maintenance	Monthly maintenance
Clean the outside of the machine.	File off any burrs from the edges of the bar.	Check the connections between the battery and the machine and also check the connection between battery and the battery charger.
Check that the components of the power trigger work safely. (Power trigger lockout and power trigger.)		Empty the oil tank and clean the inside.
Clean the chain brake and check that it operates safely. Make sure that the chain catcher is undamaged, and replace it if necessary.		Blow through the product and battery cooling slots gently with compressed air.
The bar should be turned daily for more even wear. Check the lubrication hole in the bar, to be sure it is not clogged. Clean the bar groove. If the bar has a sprocket tip, this should be lubricated.		
Check that the bar and chain are getting sufficient oil.		
Check the saw chain with regard to visible cracks in the rivets and links, whether the saw chain is stiff or whether the rivets and links are abnormally worn. Replace if necessary.		
Sharpen the chain and check its tension and condition. Check the drive sprocket for excessive wear and replace if necessary.		
Clean the machines air inlet.		
Check that nuts and screws are tight.		
Check that the keypad works correctly and is not damaged.		

13. TROUBLESHOOTING

Troubleshooting chain saw and battery ,charger.

PROBLEM	POSSIBLE CAUSE	SOLUTION
Bar and chain running hot and smoking.	Check chain tension for over tightened condition. Chain oil tank empty.	Tension chain. Refer to chain Tension earlier in this manual.
Motor runs,but chain is not roating.	Chain tension too tight. Check guide bar and chain assembly. Check guide bar and chain for damage.	Retention chain. Refer to Chain Tension earlier in this manual. Refer to Replacing the Bar and Chain earlier in this manual. Inspect guide bar and chain for damage.
Motor runs,chain rotates but does not cut.	Dull chain. Chain on backwards.	Sharpen chain. Reverse direction of chain.
Motor does not run.	Battery cartridge is not installed. Battery problem (under voltage). The drive system does not work correctly.	Install the battery cartridge. Recharge the battery. If recharging is not effective, replace battery. Ask your local authorized service center for repair.

14. EC DECLARATION

1) Herewith we, Zhejiang Zhongjian Technology Co., Ltd.
No.155 Mingyuan North AVE, Economic Development Zone, Yongkang, Zhejiang, 321300, P.R. China
declare that the following appliance complies with the appropriate basic safety and health requirements of the EC Directives based on its design and type, as brought into circulation by us.

This declaration relates exclusively to the machinery in the state in which it was placed on the market, and excludes components which are added and/or operations carried out subsequently by the final user.

2) Designation/ function: Battery chain saw for forest work, e.g. felling, delimbing, bucking.

3) Type: PCS120

4) Serial number: MM/YY-XXXXX

5) Applicable EC Directives: Machinery Directive 2006/42/EC

6) Used harmonized Standards: EN 62841-1:2015, EN 62841-4-1:2020

7) Additional used EC Directives: EMC Directive 2014/30/EU on electromagnetic compatibility
Noise Directive 2000/14/EC as amended by Directive 2005/88/EC on the noise emission in the environment by equipment for use outdoors
2011/65/EU as amended Directive (EU) 2015/863 Restriction of the use of certain hazardous substances in electrical and electronic equipment

8) Used other technical standards/ specifications: EN 55014-1:2017+A11:2020, EN 55014-2:2015

9) Responsible for documentation:

10) EC type approval: XXXXXXXXX-01 Intertek Deutschland GmbH (NB 905) Stangenstraße 1, 70771 Leinfelded-Echterdingen

Measured sound power level 94.3 dB(A)
Guaranteed sound power level 97 dB(A)
Conformity assessment method to Annex V/ Directive 2000/14/EC and 2005/88/EC

11) Date /Place/Name/ Authorized Signature: 2022-02-12/ Yongkang/ Yang Haiyue

12) Title of Signatory: Chief Engineer

PRORUN regularly improves our products, and you may find slight difference between your machine and descriptions contained within this operator's manual. Modifications can be made to the machine without notice and without the obligation to update the manual, providing that the essential safety and functional characteristics remain unaltered. Contact PRORUN Customer Service with any questions and for current specifications.

PRORUN / TOPSUN USA
200 Overhill Drive, Suite A
Mooresville, NC 28117
Proruntech.com
info@proruntech.com
Phone: 1-844-905-0882



Zhejiang Zhongjian Technology Co., Ltd
Web: www.topsunpower.cc
E-mail: sales@topsunpower.cc
ADD: No.155 Mingyuan North AVE, Economic Development Zone,
Yongkang, Zhejiang, 321300, P.R.China
Made In China