FORM NO. 3318–720

TORO®

Z–MASTER
52" Mowers
for Zero Radius Tractors

Model No. 78461 – 790001 & Up

Model No. 78466 – 790001 & Up

Operator's Manual

IMPORTANT: Read this manual carefully. It contains information about your safety and the safety of others. Also become familiar with the controls and their proper use before you operate the product.

Introduction

We want you to be completely satisfied with your new product, so feel free to contact your local Authorized Service Dealer for help with service, genuine replacement parts, or other information you may require.

Whenever you contact your Authorized Service Dealer or the factory, always know the model and serial numbers of your product. These numbers will help the Service Dealer or Service Representative provide exact information about your specific product. You will find the model and serial number plate located in a unique place on the product as shown below.

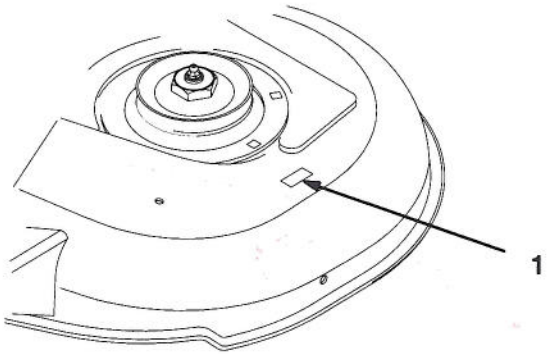

m-2744

1. Model and Serial Number Plate

For your convenience, write the product model and serial numbers in the space below.

Model No: _____

Serial No. _____

The warning system in this manual identifies potential hazards and has special safety messages that help you and others avoid personal injury, even death. DANGER, WARNING and CAUTION are signal words used to identify the level of hazard. However, regardless of the hazard, be extremely careful.

DANGER signals an extreme hazard that will cause serious injury or death if the recommended precautions are not followed.

WARNING signals a hazard that may cause serious injury or death if the recommended precautions are not followed.

CAUTION signals a hazard that may cause minor or moderate injury if the recommended precautions are not followed.

Two other words are also used to highlight information. "Important" calls attention to special mechanical information and "Note" emphasizes general information worthy of special attention.

The left and right side of the machine is determined by sitting on the seat in the normal operator's position.

©The Toro Co. – 1996

Printed in USA

Contents

	Page
Safety and Instruction Decals	2
Installation	3
Loose Parts	3
Installing the Grass Deflector (Side Discharge Model)	4
Assemble the Mower Drive	4
Installing the Mower	5
Operation	7
Side Discharge or Mulch Grass	7
Operating the Power Take Off (PTO)	7
Attachment Lift	8
Adjusting the Height-of-Cut	8
Adjusting the Gauge Wheel	9
Tips for Mowing Grass	10
Maintenance	11
Service Interval Chart	11
Cutting Blades	11
Correcting Cutting Unit Mismatch	14
Setting the Side-to-Side Leveling	14
Setting the Front-to-Rear Pitch	15
Greasing the Bearings	16
Replacing the Deck Belt	16
Replacing the Drive Belt	17
Removing Baffle for Side Discharge (Recycler® Only)	18
Replacing the Grass Deflector	19
Storage	19
Troubleshooting	20

Safety and Instruction Decals

Safety decals and instructions are easily visible to the operator and are located near any area of potential danger. Replace any decal that is damaged or lost.

ON BOTH SIDES OF CUTTING UNIT
(Part No. 92–7108)



UNDER DEFLECTOR
(Part No. 66–6380)



ON DEFLECTOR
(Part No. 93–1122)



ON DEFLECTOR
(Part No. 92–7109)



ON RIGHT SIDE
(Part No. 94–6225)



ON LEFT SIDE OF MOWER
(Part No. 94–6271)

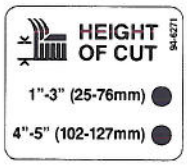

ON TOP CENTER
(Part No. 94–6281)

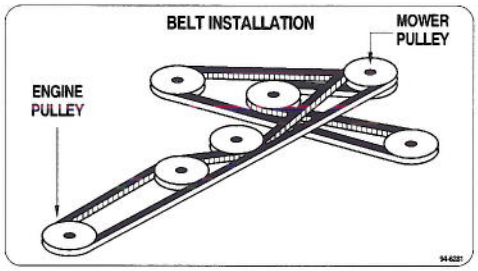

ON LEFT SIDE
NEXT TO GAUGE WHEEL
(Part No. 94–6271)

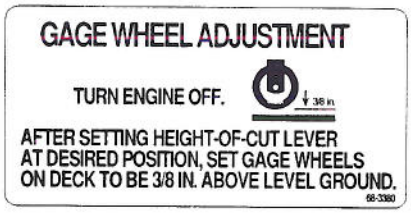

Installation

Loose Parts

Note: Use the chart below to identify parts used for assembly.

DESCRIPTION	QTY.	USE
Deflector	1	Install deflector to mower
Bolt 3/8–24 x 3-3/4" (95 mm)	2	
Spring	2	
Locknut 3/8–24	2	
Stabilizer bars	2	Install stabilizer bars to mower
Clevis pin 3/8–1-1/4" (32 mm)	2	
Clevis pin 3/8–2-1/4" (57 mm)	2	
Hairpin cotter	4	
Pivot plate	1	Install pivot plate and drive belt to mower
Drive belt	1	
Retaining ring	1	
Spring	1	
Eye bolt	1	
Washer 3/8"	1	
Jam nut 3/8"	2	
Flange nut	2	Install mower to traction unit
Washer 3/8"	2	
Jam nut 3/8–16	2	
Clevis pin 3/8–1-1/4" (32 mm)	2	
Hairpin cotter	2	
Operator's Manual	1	Read before operating
Parts Catalog	1	Ordering parts

Installing the Grass Deflector (Side Discharge Model)

1. Install the deflector mounts onto the pivot brackets with the (2) 3/8–3-3/4" (95 mm) bolts, (2) springs and (2) 3/8" locknuts. Make sure the straight ends of the springs are positioned between the deflector mounts and the grass deflector (Fig. 1).

2. Tighten the locknuts until they contact the pivot brackets (Fig. 1).

   IMPORTANT: The grass deflector must be spring-loaded in the down position. Lift the deflector up to test that it snaps to the full down position.

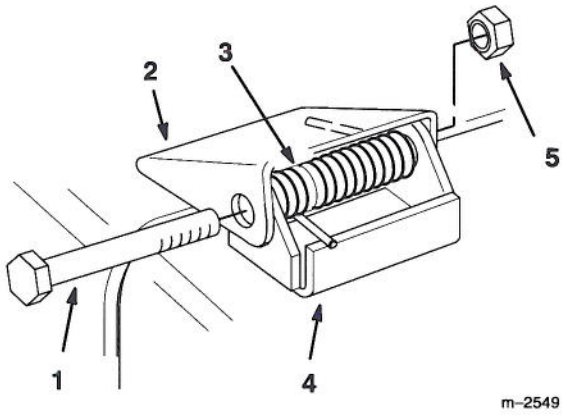

Figure 1

1. Bolt 3/8–24 x 3-3/4" (95 mm)
2. Deflector Mount
3. Spring
4. Pivot Bracket
5. Locknut 3/8"

Assemble the Mower Drive

1. Mount (2) stabilizer bars to holes in front mower brackets with (2) 3/8"–1-1/4" (32 mm) clevis pins and (2) hairpin cotters (Fig. 2).

2. Secure stabilizer bars between rear brackets with (2) 3/8"–2-1/4" (57 mm) clevis pins and (2) hairpin cotters (Fig. 2).

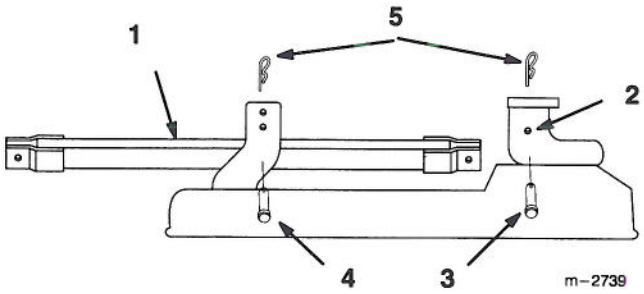

Figure 2

1. Stabilizer bar
2. Front mower bracket–middle hole
3. Clevis Pin 3/8"–1-1/4" (32 mm)
4. Clevis Pin 3/8"–2-1/4" (57 mm)
5. Hairpin Cotter

3. Route drive belt around top pulley of mower and idler pulleys on pivot plate (Fig. 3).

4. Place idler plate over pivot pin and secure with retaining ring (Fig. 3).

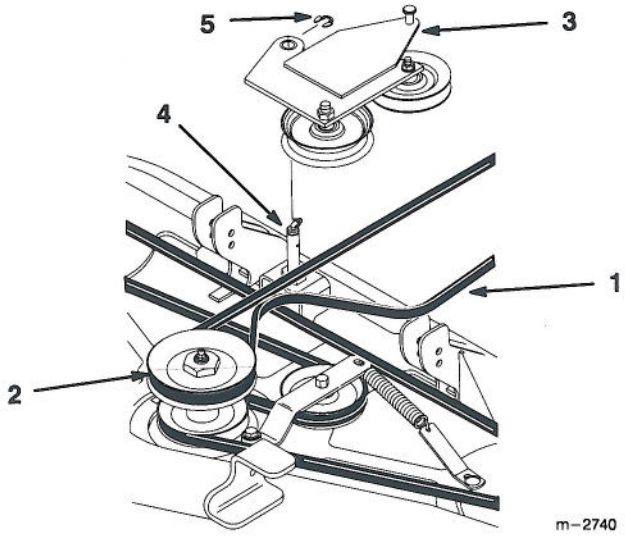

Figure 3

1. Drive Belt
2. Top pulley
3. Idler plate
4. Pin
5. Retaining ring

5. Hook spring over pin on idler plate and loosely mount to mower with eye bolt, 3/8" washer and (2) 3/8" jam nuts (Fig. 4).

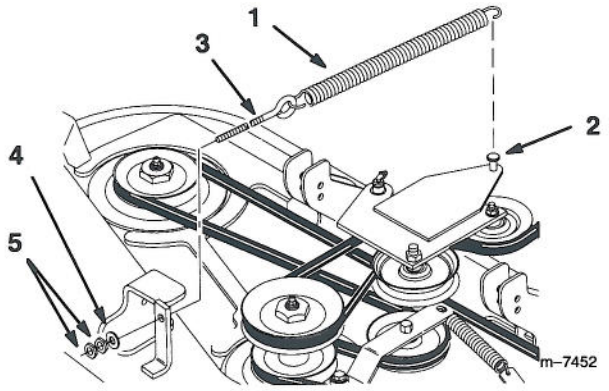

Figure 4

1. Pin
2. Spring
3. Eye bolt 3/8'
4. Washer 3/8"
5. Jam nut 3/8"

Installing the Mower

1. Remove (2) wing nuts and washers on footrest panel and remove panel from frame.

2. Slide mower under traction unit.

3. Route mower drive belt around the clutch drive pulley (Fig. 5).

4. Slide mower forward and secure stabilizer bars to holes in traction unit frame mounts with (2) 3/8"–1-1/4" (32 mm) clevis pins and (2) hairpin cotters (Fig. 5).

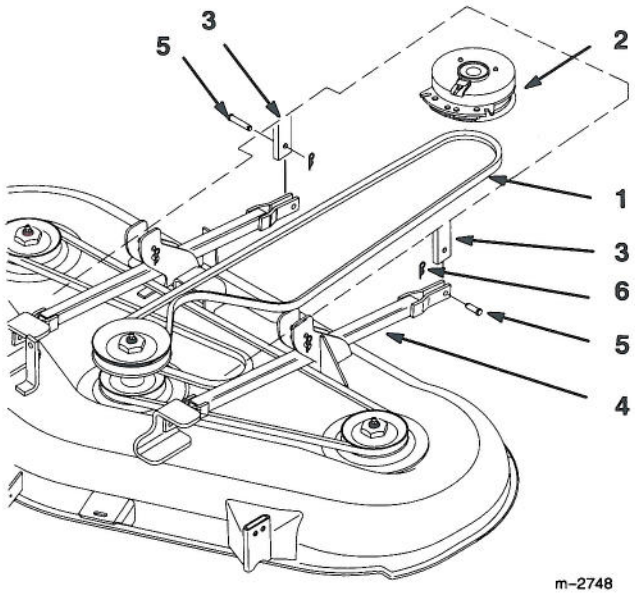

Figure 5

1. Drive belt
2. Clutch pulley
3. Frame mount
4. Stabilizer bar
5. Clevis pin 3/8"–1-1/4" (32 mm)
6. Hairpin cotter

5. Push attachment lift pedal all the way down, remove pedal spring and move foot pedal all the way back (Fig. 6).

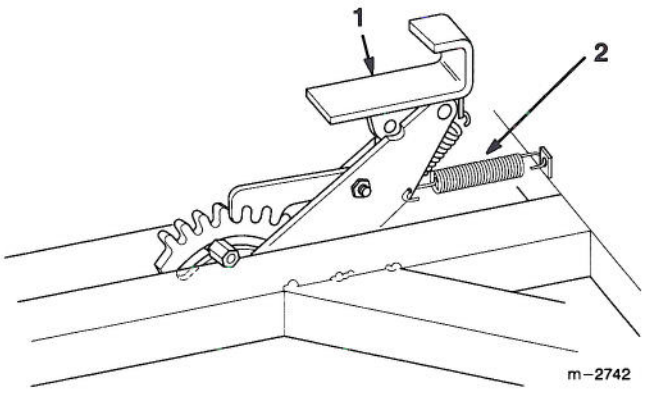

Figure 6

1. Attachment lift pedal
2. Pedal spring

6. Attach front lift chain bolts to mower with (2) 3/8" flange nuts, (2) 3/8" washers and (2) 3/8" locknuts (Fig. 7).

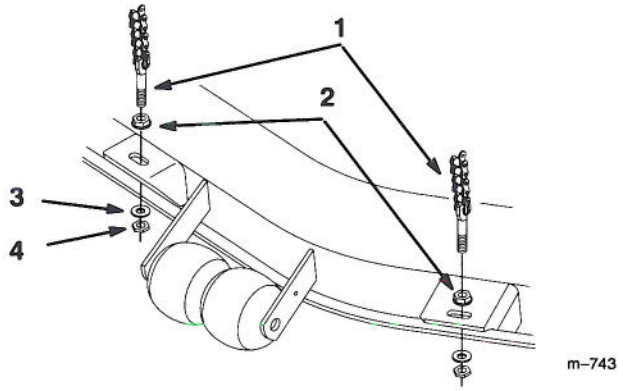

Figure 7

1. Lift chain
2. Flange nut 3/8"
3. Washer 3/8"
4. Locknut 3/8"

7. Push attachment lift pedal all the way down and instal pedal spring (Fig. 6).

8. Tension the drive belt by tighten the front jam nut on eyebolt until the spring is 15-5/16" (38.9 cm). Measure the spring length between the pin and the eyebolt (Fig. 8).

9. Tighten the rear jam nuts (Fig. 8).

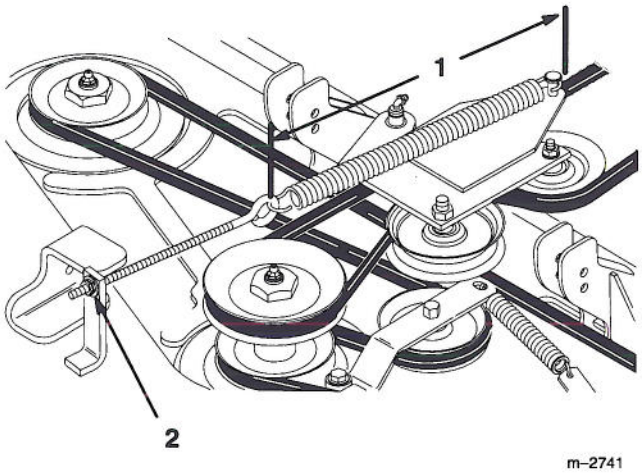

Figure 8

1. Spring 15-5/16" (38.9 cm)
2. Jam nut 3/8"

10. Adjust mower side-to-side leveling and front-to-rear pitch; refer to pages 14 and 15.

Operation

Side Discharge or Mulch Grass

The mower has a hinged grass deflector that disperses clippings to the side and down toward the turf.

⚠ DANGER

POTENTIAL HAZARD

- **Without the grass deflector or complete grass catcher assembly mounted in place, you and others are exposed to blade contact and thrown debris.**

WHAT CAN HAPPEN

- **Contact with rotating mower blade(s) and thrown debris will cause injury or death.**

HOW TO AVOID THE HAZARD

- **NEVER remove the grass deflector from the mower because the grass deflector routes material down toward the turf. If the grass deflector is ever damaged, replace it immediately.**
- **Never put your hands or feet under the mower.**
- **Never try to clear discharge area or mower blades unless you move the power take-off (PTO) to "OFF" and rotate the ignition key to "OFF." Also remove the key and pull the wire(s) off the spark plug(s).**

The power take off (PTO) engages and disengages power to the attachment clutch.

Operating the Power Take Off (PTO)

The power take off (PTO) engages and disengages power to the attachment clutch.

Engaging the Power Take Off (PTO)

1. Release pressure on the motion control levers to stop the machine.
2. Raise the cover and move the power take off (PTO) switch to the "ON" position to engage (Fig. 9).

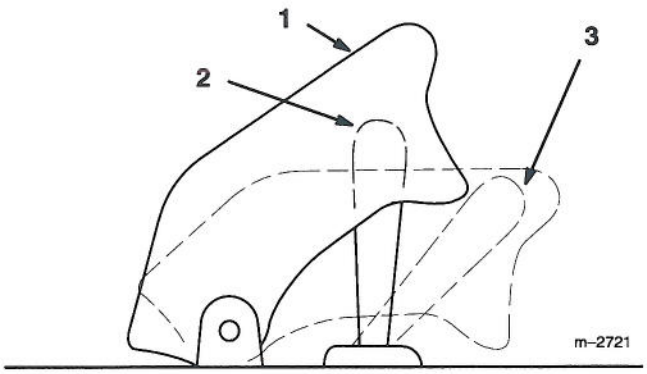

Figure 9

1. Cover
2. ON-Engaged
3. OFF-Disengaged

Disengaging the Power Take Off (PTO)

1. Release pressure on the motion control levers to stop the machine.
2. Lower the cover of the power take off (PTO) switch. This moves the switch to the "OFF" position to disengage (Fig. 9).

Attachment Lift

The attachment lift (Fig. 10) is used to raise and lower attachments.

Raising Attachments

1. Place your foot on the lift pedal (Fig. 10).
2. Push down with your foot, release the lock by rocking the pedal with your heel, then press with your toe to raise the attachment lift (Fig. 1011). Remove your foot to hold the attachment in the up, or raised position.

Lowering Attachments

1. Place your foot on the lift pedal (Fig. 10).
2. Push down with your foot, release the lock by rocking the pedal with your heel, then release foot pressure to lower the attachment lift (Fig. 10). Remove your foot to hold the attachment in the down, or desired position.

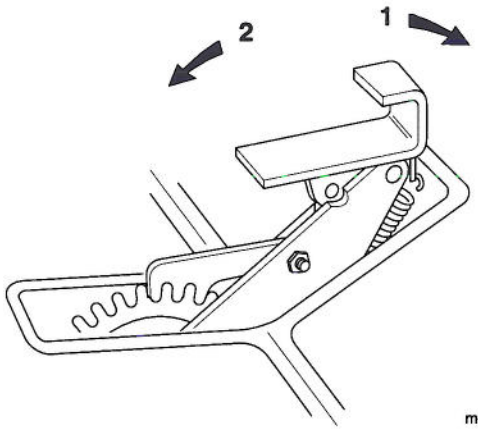

Figure 10

1. Lift pedal -UP
2. Lift pedal-DOWN

Adjusting the Height-of-Cut

The pins and stabilizer bars are used to adjust the height-of-cut range; refer to; Setting the Front-to-Rear Pitch page 15.

1. Set the stabilizer bars for the desired cut height range, refer to; Setting the Front–to–Rear Pitch page 15.
2. Loosen down stop on attachment lift (Fig. 11).
3. Set attachment lift to the correct position for selected cut height (Fig. 11).
4. Slide down stop against attachment lift and tighten bolt (Fig. 11).

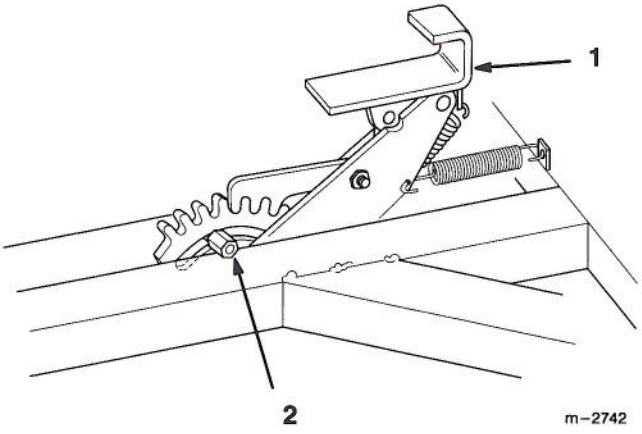

Figure 11

1. Attachment lift
2. Down stop

Adjusting the Gauge Wheel

Whenever you change the height-of-cut you must also adjust the height of the gauge wheels.

Stop the engine before adjusting the gauge wheel height.

1. Pull the hairpin cotter out of the clevis pin and remove the clevis pin from the gauge wheel plate and mounting bracket (Fig. 12).

2. Reposition the gauge wheel so it's approximately 1/4" to 3/8" (6 to 10 mm) above the ground, then insert the clevis pin through the gauge wheel plate and mounting bracket (Fig. 12).

3. Reinstall the hairpin cotter into the clevis pin (Fig. 12).

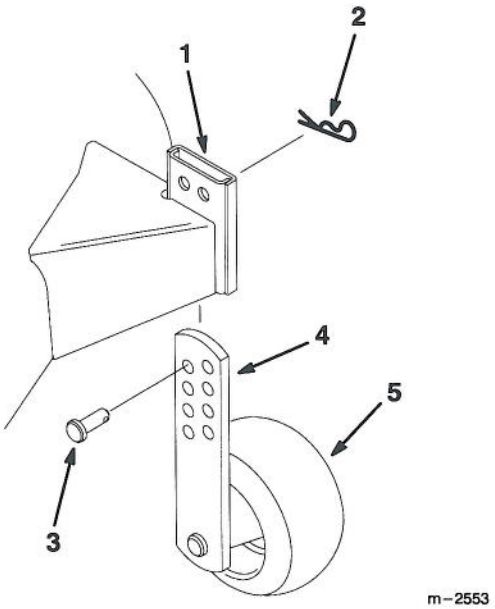

Figure 12

1. Mounting Bracket
2. Hairpin Cotter
3. Clevis Pin
4. Gauge Wheel Plate
5. Gauge Wheel

Tips for Mowing Grass

Fast Throttle Setting

For best mowing and maximum air circulation, operate the engine at "FAST." Air is required to thoroughly cut grass clippings, so do not set the height-of-cut so low as to totally surround the mower by uncut grass. Always try to have one side of the mower free from uncut grass, which allows air to be drawn into the mower.

Cutting a Lawn for the First Time

Cut grass slightly longer than normal to ensure the cutting height of the mower does not scalp any uneven ground. However, the cutting height used in the past is generally the best one to use. When cutting grass longer than six inches tall, you may want to cut the lawn twice to ensure an acceptable quality of cut.

Cut 1/3 of the Grass Blade

It is best to cut only about 1/3 of the grass blade. Cutting more than that is not recommended unless grass is sparse, or it is late fall when grass grows more slowly.

Mowing Direction

Alternate mowing direction to keep the grass standing straight. This also helps disperse clippings which enhances decomposition and fertilization.

Mow at Correct Intervals

Normally, mow every four days. But remember, grass grows at different rates at different times. So to maintain the same cutting height, which is a good practice, mow more often in early spring. As the grass growth rate slows in mid summer, mow less frequently. If you cannot mow for an extended period, first mow at a high cutting height; then mow again two days later at a lower height setting.

Cutting Speed

To improve cut quality, use a slower ground speed.

Avoid Cutting Too Low

If the cutting width of the mower is wider than the mower you previously used, raise the cutting height to ensure that uneven turf is not cut too short.

Long Grass

If the grass is ever allowed to grow slightly longer than normal, or if it contains a high degree of moisture, raise the cutting height higher than usual and cut the grass at this setting. Then cut the grass again using the lower, normal setting.

When Stopping

If the machine's forward motion must be stopped while mowing, a clump of grass clippings may drop onto your lawn. To avoid this, move onto a previously cut area with the blades "ENGAGED".

Keep the Underside of the Mower Clean

Clean clippings and dirt from the underside of the mower after each use. If grass and dirt build up inside the mower, cutting quality will eventually become unsatisfactory.

Blade Maintenance

Maintain a sharp blade throughout the cutting season because a sharp blade cuts cleanly without tearing or shredding the grass blades. Tearing and shredding turns grass brown at the edges, which slows growth and increases the chance of disease. Check the cutter blades daily for sharpness, and for any wear or damage. File down any nicks and sharpen the blades as necessary. If a blade is damaged or worn, replace it immediately with a genuine TORO replacement blade.

Maintenance

Service Interval Chart

Service Operation	Each Use	8 Hours	25 Hours	Storage Service	Notes
Cutting Blades – check		X		X	
Belts – check for wear/cracks				X	
Blade Spindle Bearings – grease		X			
Mower Housing – clean	X			X	
Chipped Surfaces – paint				X	

Cutting Blades

To ensure a superior quality of cut, keep the blades sharp. For convenient sharpening and replacement, you may want to keep extra blades on hand.

⚠ WARNING

POTENTIAL HAZARD

- **A blade that is worn or damaged could break apart and pieces could be thrown at bystanders or at you as you use the mower.**

WHAT CAN HAPPEN

- **Pieces of blade that may be thrown could seriously injure or kill you or bystanders.**

HOW TO AVOID THE HAZARD

- **Periodically inspect the blade for wear and damage. Immediately install a new blade if it is worn or damaged.**

Before Inspecting or Servicing the Blades

Park the machine on a level surface, disengage the blade control (PTO) and set the parking brake. Turn the ignition key to "OFF" to stop the engine. Remove the key and disconnect the spark plug wire(s) from the spark plug(s).

Inspecting the Blades

1. Inspect the cutting edges (Fig 13). If the edges are not sharp or have nicks, remove and sharpen the blades. Refer to Sharpening the Blades on page 13.

2. Inspect the blades, especially the curved area (Fig. 13). If you notice any damage, wear, or a slot forming in this area (item 3 in Fig. 13), immediately install a new blade.

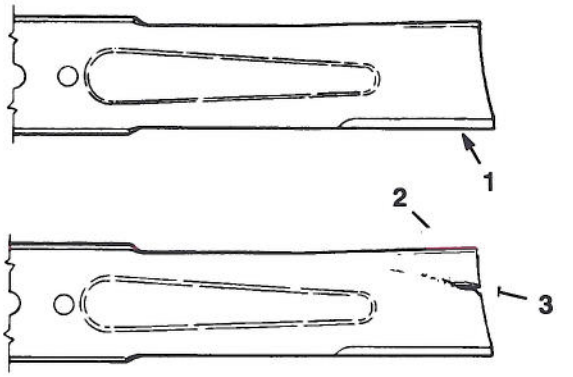

Figure 13

1. Cutting Edge
2. Curved Area
3. Wear/slot Forming

Checking for Bent Blades

1. Rotate the blades until the ends face forward and backward (Fig. 14). Measure from a level surface to the cutting edge of the blades (Fig. 15). Note this dimension.

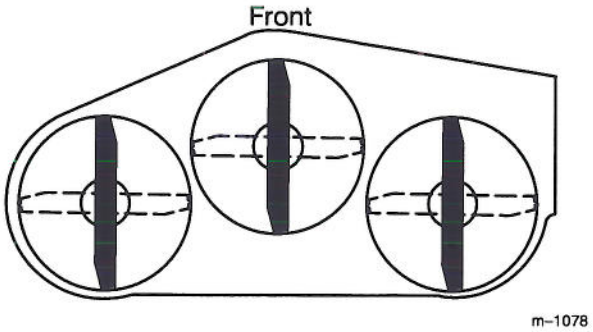

Figure 14

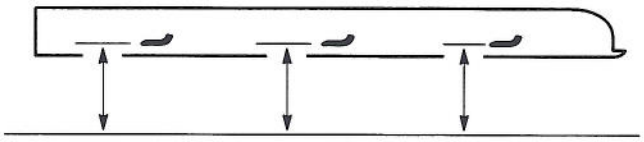

MEASURE FROM CUTTING EDGE TO A LEVEL SURFACE

m-2539

Figure 15

2. Rotate the opposite ends of the blades forward. Measure from a level surface to the cutting edge of the blades at the same position as in step 1 above. The difference between the dimensions obtained in steps 1 and 2 must not exceed 1/8" (3 mm). If this dimension exceeds 1/8" (3 mm), the blade is bent and must be replaced. Refer to Removing the Blades, and Installing the Blades on page 13.

⚠ WARNING

POTENTIAL HAZARD

- **A blade that is bent or damaged could break apart and pieces could be thrown at bystanders or at you as you use the mower.**

WHAT CAN HAPPEN

- **Pieces of blade that may be thrown could seriously injure or kill you or bystanders.**

HOW TO AVOID THE HAZARD

- **Always replace bent or damaged blade with a new blade.**
- **Never file or create sharp notches in the edges or surfaces of blade.**

Removing the Blades

Blades must be replaced if a solid object is hit, if the blade is out of balance or is bent. To ensure optimum performance and continued safety conformance of the machine, use genuine TORO replacement blades. Replacement blades made by other manufacturers may result in non-conformance with safety standards.

Hold the blade end using a rag or thickly-padded glove. Remove the blade bolt, lock washer, anti-scalp cup and blade from the spindle shaft (Fig. 16).

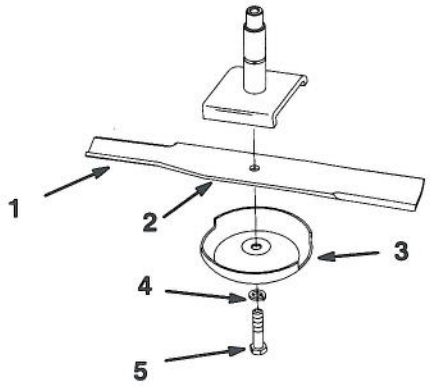

Figure 16

1. Sail Area of Blade
2. Blade
3. Anti-scalp Cup
4. Lock Washer
5. Blade Bolt

Sharpening the Blades

1. Use a file to sharpen the cutting edge at both ends of the blade (Fig. 17). Maintain the original angle. The blade retains its balance if the same amount of material is removed from both cutting edges.

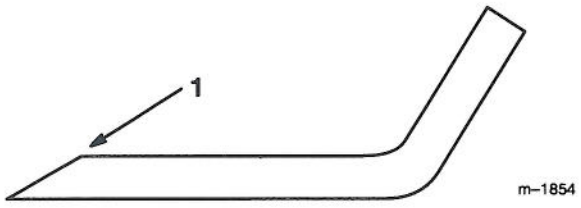

Figure 17

1. Sharpen at original angle

2. Check the balance of the blade by putting it on a blade balancer (Fig. 18). If the blade stays in a horizontal position, the blade is balanced and can be used. If the blade is not balanced, file some metal off the end of the sail area only (Fig. 16). Repeat this procedure until the blade is balanced.

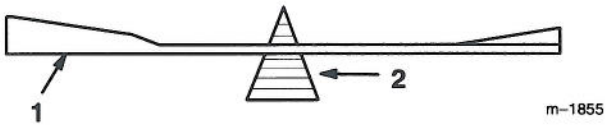

Figure 18

1. Blade
2. Balancer

Installing the Blades

1. Install the blade onto the spindle shaft (Fig. 16).

   IMPORTANT: The curved part of the blade must be pointing upward toward the inside of the mower to ensure proper cutting.

2. Install the lock washer and blade bolt (Fig. 16). Torque the blade bolt to 85–110 ft-lb (115–150 N•m).

Correcting Cutting Unit Mismatch

If one cutter blade cuts lower than the other, correct as follows:

1. Stop the engine, set the parking brake, remove the key and disconnect the spark plug wire(s) from the spark plug(s).
2. Adjust the tire pressure in all tires to specifications and check that the blades are not bent. Refer to Checking for Bent Blades on page 12.
3. Set the height-of-cut to the 2-1/2" position. Refer to Adjusting the Height-Of-Cut in the Operation section. Make sure the clevis pins are resting on the frame cushions.
4. Rotate the blades so the tips line up with one another. The tips of both blades must be within 1/8" (3 mm) of each other. If the blade tips are not within 1/8" (3 mm) of each other, add shim washers (Part No. 3256-24) between the appropriate spindle housing and the bottom of the cutting unit to align the blades.

Setting the Side-to-Side Leveling

1. Check the tire pressure.
2. Position the blades side-to-side (Fig. 19). Measure at "A" and "B" locations (Fig. 19) from a level surface to the cutting edge of blades (Fig. 20).
3. The difference between measurements "A" and "B" should be no more than 1/4" (6 mm).

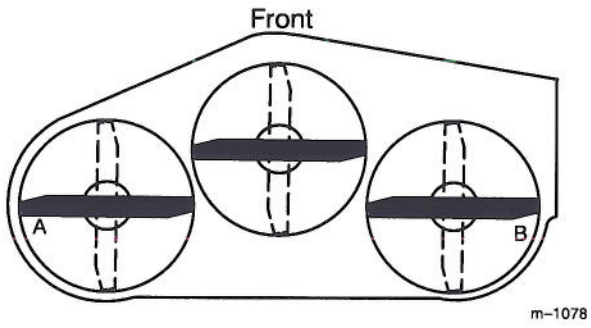

Figure 19

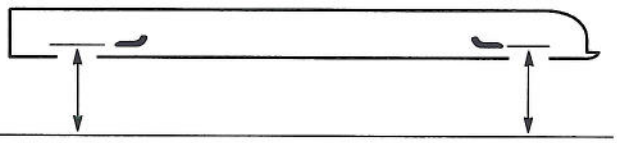

MEASURE FROM CUTTING EDGE TO A LEVEL SURFACE

m-2550

Figure 20

4. To change the side-to-side leveling, loosen upper flange nut(s) and adjust lower locknut at the front of the mower (Fig. 24).

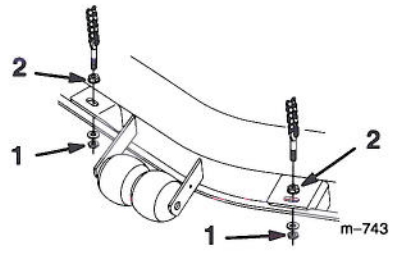

Figure 21

1. Locknut 2. Flange Nut

5. Check the front-to-rear pitch of the cutting unit.

Setting the Front-to-Rear Pitch

1. Check the tire pressure.
2. Position the blades front-to-rear (Fig. 22). Measure at "C" and "D" locations (Fig. 22) from a level surface to the cutting edge of the blades (Fig. 23).
3. The mower should be 1/8"–5/8" (3–16 mm) lower in front "C" than in the rear "D".

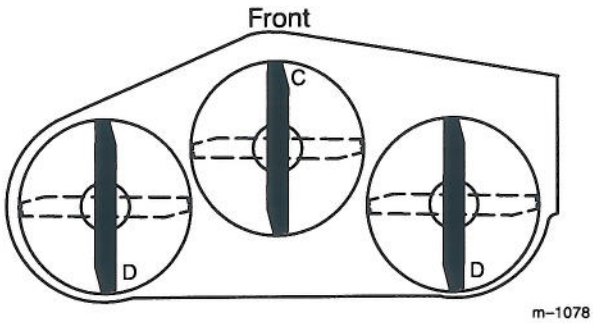

m–1078

Figure 22

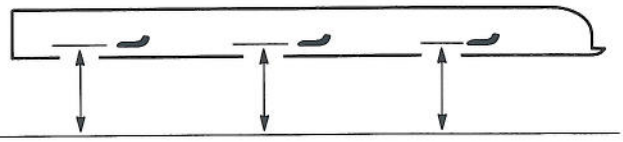

MEASURE FROM CUTTING EDGE TO A LEVEL SURFACE

m–2539

Figure 23

4. To change the front-to-rear pitch, change pin location at center stabilizer mounts on both sides (Fig. 24).
5. Select the cut height range for adjustment according to decal.

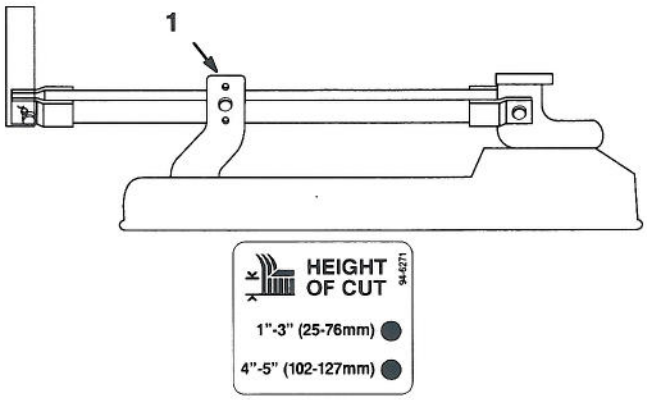

Figure 24

1. Center Pin

6. Check the side-to-side leveling of the cutting unit.

Greasing the Bearings

The cutting unit must be lubricated regularly. Refer to the Service Interval Chart on page 11. Grease with No. 2 general purpose lithium base or molybdenum base grease.

1. Stop the engine, set the parking brake, remove the key and disconnect the spark plug wire(s) from the spark plug(s).
2. Grease the fittings on the three spindle bearings (Fig. 26).
3. Grease the pivot plate fitting (Fig. 26).

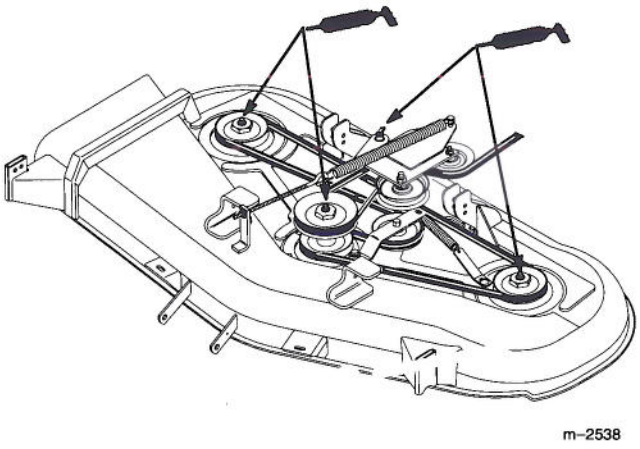

Figure 25

Replacing the Deck Belt

Squealing when the belt is rotating, blades slipping when cutting grass, frayed belt edges, burn marks and cracks are signs of a worn deck belt. Replace the deck belt if any of these conditions are evident.

1. Stop the engine, set the parking brake, remove the key and disconnect the spark plug wire(s) from the spark plug(s).
2. Remove the drive belt. Refer to Replacing the Drive Belt, steps 3 and 4 on page 17.
3. Disconnect the idler arm spring to relieve tension on the idler arm and idler pulley, then remove the worn deck belt (Fig. 26).
4. Install the new deck belt around the spindle pulleys, belt guide, the idler pulley, and in the lower groove of the center spindle pulley (Fig. 26).
5. Connect the idler arm spring (Fig. 26).

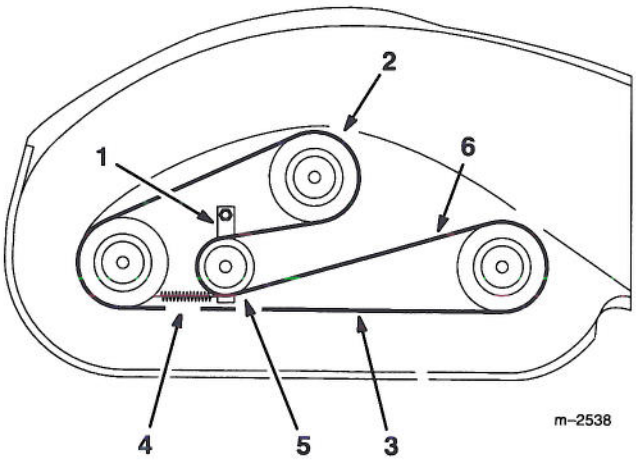

Figure 26

Top View

1. Idler Arm
2. Center Spindle Pulley
3. Belt Guide
4. Idler Arm Spring
5. Idler Pulley
6. Deck Belt

6. Reinstall the drive belt. Refer to Replacing the Drive Belt, steps 5 and 6 on page 17.

Replacing the Drive Belt

Squealing when the belt is rotating, blades slipping when cutting grass, frayed belt edges, burn marks and cracks are signs of a worn drive belt. Replace the drive belt if any of these conditions are evident.

1. Stop the engine, set the parking brake, remove the key and disconnect the spark plug wire(s) from the spark plug(s).
2. Loosen the jam nuts on the drive belt tension spring eyebolt (Fig. 27).
3. Remove the worn drive belt (Fig. 28).

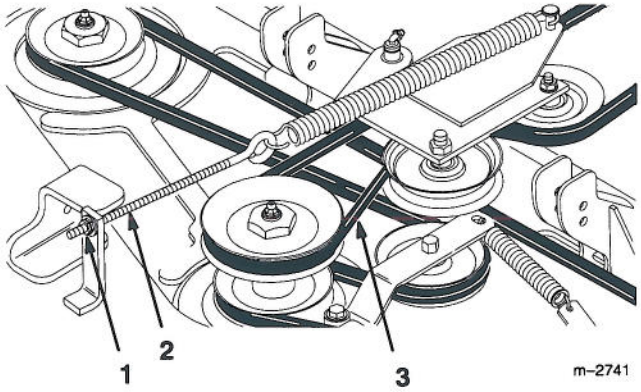

Figure 27

1. Jam Nuts
2. Eyebolt
3. Drive Belt

4. Install the new drive belt onto the traction unit PTO clutch pulley and the top groove of the center spindle pulley (Fig. 28).

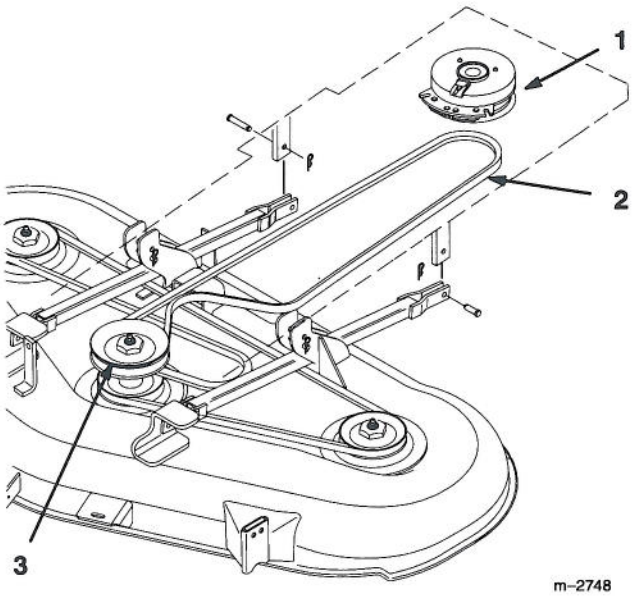

Figure 28

1. Traction Unit Clutch Pulley
2. Drive Belt
3. Center Spindle Pulley

5. Tighten the jam nuts on the eyebolt until the spring is stretched to a length of 15-5/16" (38.9 cm) (Fig 29).

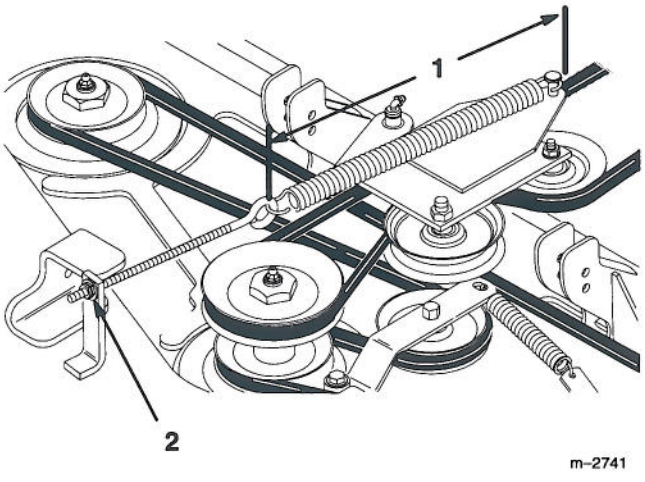

Figure 29

1. Spring 15-5/16" (38.9 cm)
2. Jam nut 3/8"

Removing Baffle for Side Discharge (Recycler® Only)

⚠ DANGER

POTENTIAL HAZARD
- **Without the grass deflector or complete grass catcher assembly mounted in place, you and others are exposed to blade contact and thrown debris.**

WHAT CAN HAPPEN
- **Contact with rotating mower blade(s) and thrown debris will cause injury or death.**

HOW TO AVOID THE HAZARD
- **NEVER remove the grass deflector from the mower because the grass deflector routes material down toward the turf. If the grass deflector is ever damaged, replace it immediately.**
- **Never put your hands or feet under the mower.**
- **Never try to clear discharge area or mower blades unless you move the power take-off (PTO) to "OFF" and rotate the ignition key to "OFF." Also remove the key and pull the wire(s) off the spark plug(s).**

Note: Only the right side baffle needs to be removed for side discharge mowing or bagging.

1. Thoroughly clean the mower.
2. Remove the hex head screws and locknuts holding the right side baffle to the left side baffle and deck (Fig. 30).
3. Lower the right side baffle and slide it out of the discharge opening to remove it from the deck (Fig. 30).

IMPORTANT: If you change to the optional high sail bagging blades, you must remove the right and left side baffles, and kicker plates.

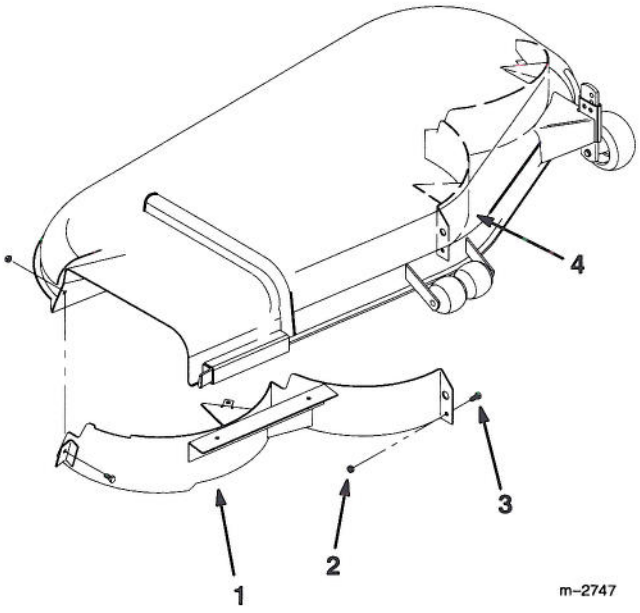

Figure 30

1. Right Side Baffle
2. Locknut (typical)
3. Hex Head Screw (typical)
4. Left Side Baffle

⚠ DANGER

POTENTIAL HAZARD
- **Open holes in the mower expose you and others to thrown debris.**

WHAT CAN HAPPEN
- **Debris thrown out of holes in the mower can cause injury.**

HOW TO AVOID THE HAZARD
- **Never operate mower without hardware mounted in all holes in mower.**
- **Install hardware in all open mounting holes when recycler baffle is removed.**

4. Install the hex head screws and locknuts into the open holes in the deck for safety.

Replacing the Grass Deflector

1. Remove the locknuts, bolts and springs holding the deflector mounts to the pivot brackets (Fig. 31).
2. If the pivot brackets need to be replaced, remove the carriage bolts and cone locknuts holding the old brackets to the top of the discharge opening, then install the replacement pivot brackets. Make sure the carriage bolt heads are on the inside of the cutting unit (Fig. 31).
3. Install the deflector mounts onto the pivot brackets with the bolts, springs and locknuts. Make sure the straight ends of the springs are positioned between the deflector mounts and the grass deflector (Fig. 31).
4. Tighten the locknuts until they contact the pivot brackets (Fig. 31).

   IMPORTANT: The grass deflector must be spring-loaded in the down position. Lift the deflector up to test that it snaps to the full down position.

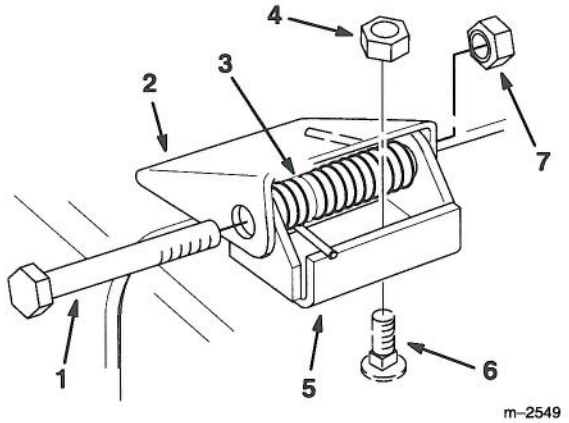

Figure 31

1. Bolt
2. Deflector Mount
3. Spring
4. Cone Locknut
5. Pivot Bracket
6. Carriage Bolt
7. Locknut

Storage

1. Clean any dirt and chaff from the top of the mower.
2. Scrape any heavy buildup of grass and dirt from the underside of the mower, then wash the mower with a garden hose.
3. Check the condition of the blades. Refer to Cutting Blades on page 11.
4. Check the condition of the drive and deck belts.
5. Check and tighten all bolts, nuts and screws. Repair or replace any part that is damaged or defective.
6. Paint all scratched or bare metal surfaces. Paint is available from your Authorized Service Dealer.
7. Store the machine in a clean, dry garage or storage area. Cover the machine to protect it and keep it clean.

Troubleshooting

PROBLEM	POSSIBLE CAUSES	CORRECTIVE ACTION
Abnormal vibration.	1. Cutting blade(s) is/are bent or unbalanced.	1. Install new cutting blade(s).
	2. Blade mounting bolt is loose.	2. Tighten blade mounting bolt.
	3. Engine mounting bolts are loose.	3. Tighten engine mounting bolts.
	4. Loose engine pulley, idler pulley, or blade pulley.	4. Tighten the appropriate pulley.
	5. Engine pulley is damaged.	5. Contact Authorized Service Dealer.
	6. Blade spindle bent.	6. Contact Authorized Service Dealer.
Uneven cutting height.	1. Blade(s) not sharp.	1. Sharpen blade(s).
	2. Cutting blade(s) is/are bent.	2. Install new cutting blade(s).
	3. Mower is not level.	3. Level mower from side-to-side and front-to-rear.
	4. Gage wheel not set correctly.	4. Adjust gage wheel height.
	5. Underside of mower is dirty.	5. Clean the underside of the mower.
	6. Tire pressure is incorrect.	6. Adjust tire pressure.
	7. Blade spindle bent.	7. Contact Authorized Service Dealer.
Blades do not rotate.	1. Drive belt is worn, loose or broken.	1. Install new drive belt.
	2. Drive belt is off pulley.	2. Install drive belt and check adjusting shafts and belt guides for correct position.
	3. Deck belt is worn, loose or broken.	3. Install new deck belt.
	4. Deck belt is off pulley.	4. Install deck pulley and check the idler pulley, idler arm and spring for correct position and function.


TORO®