Bäumr-AG®




# 540CX 18” Lawn Mower

## User Manual

[Revision 1.0]

READ THIS MANUAL CAREFULLY BEFORE USE – FAILURE TO DO SO MAY RESULT IN INJURY, PROPERTY DAMAGE AND MAY VOID WARRANTY. • KEEP THIS MANUAL FOR FUTURE REFERENCE. • Products covered by this manual may vary in appearance, assembly, inclusions, specifications, description, and packaging.

**THE BATTERY MAY HAVE SOME CHARGE ON ARRIVAL, IT IS IMPORTANT HOWEVER THAT THE BATTERY IS CHARGED PRIOR TO USE.**

# Safety

Safety messages are designed to alert you to possible dangers or hazards that could cause death, injury or equipment or property damage if not understood or followed. Safety messages have the following symbols:



You WILL be KILLED or SERIOUSLY INJURED if you do not follow instructions.



You CAN be KILLED or SERIOUSLY INJURED if you do not follow instructions.



You CAN be INJURED if you do not follow instructions or equipment damage may occur.

It is vital that you read and understand this user manual before using the product, including safety warnings, and any assembly and operating instructions. Keep the manual for future reference.

Safety precautions and recommendations detailed here must be fully understood and followed to reduce the risk of injury, fire, explosion, electrical hazard, and/or property damage.

Safety information presented here is generic in nature – some advice may not be applicable to every product. The term "equipment" refers to the product, be it electrical mains powered, battery powered or combustion engine powered.

- **Before Use** - If you are not familiar with the safe operation/handling of the equipment or are in any way unsure of any aspect of suitability or correct use for your application, you should complete training conducted by a person or organization qualified in safe use and operation of this equipment, including fuel/electrical handling and safety.
- Do NOT operate the equipment in flammable or explosive environments, such as in the presence of flammable liquids, gases, or dust. The equipment may create sparks or heat that may ignite flammable substances.
- Keep clear of moving parts.
- Equipment may be a potential source of electric shock or injury if misused.
- Do NOT operate the equipment if it is damaged, malfunctioning or is in an excessively worn state.
- Do NOT allow others to use the equipment unless they have read this manual and are adequately trained.
- Keep packaging away from children - risk of suffocation! Operators must use the equipment correctly. When using the equipment, consider conditions and pay due care to persons and property.

## General Work Area Safety

- Work areas should be clean and well it.
- Do not operate the equipment if bystanders, animals etc are within operating range of the equipment or the general work area.
- If devices are provided for connecting dust extraction / collection facilities, ensure these are connected and used properly. Dust collection can reduce dust-related hazards.

## General Personal Safety

- Wear appropriate protective equipment when operating, servicing, or when in the operating area of the equipment to help protect from eye and ear injury, poisoning, burns, cutting and crush injuries. Protective equipment such as safety goggles, respirators, non-slip safety footwear, hard hat, hearing protection etc should be used for appropriate equipment / conditions. Other people nearby should also wear appropriate personal protective equipment. Do not wear loose clothing or jewellery, which can be caught in moving parts. Keep hair and clothing away from the equipment.
- Stay alert and use common sense when operating the equipment. Do not over-reach. Always maintain secure footing and balance.
- Do not use the equipment if tired or under the influence of drugs, alcohol, or medication.
- This equipment is not intended for use by persons with reduced physical, sensory, or mental capabilities.

## General Fuel Safety

- Petrol/fuel/gasoline is extremely flammable – keep clear of naked flames or other ignition sources.
- Do not spill fuel. If you spill fuel, wipe it off the equipment immediately – if fuel gets on your clothing, change clothing.
- Do NOT smoke near fuel or when refuelling.
- Always shut off the engine before refuelling.
- Do NOT refuel a hot engine.
- Open the fuel cap carefully to allow any pressure build-up in the tank to release slowly.
- Always refuel in well-ventilated areas.
- Always check for fuel leakage. If fuel leakage is found, do not start, or run the engine until all leaks are fixed.

## General Carbon-Monoxide Safety

- Using a combustion engine indoors **CAN KILL IN MINUTES**. Engine exhaust contains carbon-monoxide – a poison you cannot smell or see.
- Use combustion engines OUTSIDE only, and far away from windows, doors, and vents.

## General Equipment Use and Care

- Keep packaging away from children and pets, potential risk of suffocation or choking.
- The equipment is designed for domestic use only.
- Handle the equipment safely and carefully.
- Before use, inspect the equipment for misalignment or binding of moving parts, loose components, damage, or any other condition that may affect its operation. If damaged, have the equipment repaired by an authorised service centre or technician before use.
- Prevent unintentional starting of the equipment - ensure equipment and power switches are in the OFF position before connecting or moving equipment. Do not carry equipment with hands or fingers touching any controls. Remove any tools or other items that are not a part of the equipment from it before starting or switching on.
- Do not force the equipment. Use the correct equipment for your application. Equipment will perform better and be safer when used within its design and usage parameters.
- Use the equipment and accessories etc. in accordance with these instructions, considering working conditions and the work to be performed. Using the equipment for operations different from those intended could result in hazardous situations.
- Always keep equipment components (engines, hoses, handles, controls, frames, housings, guards etc) and accessories (cutting tools, nozzles, bits etc) properly maintained. Keep the equipment clean and, where applicable, properly lubricated.
- Store the equipment out of reach of children or untrained persons. To avoid burns or fire hazards, let the equipment cool completely before transporting or storing. Never place or store the equipment near flammable materials, combustible gases, or liquids etc.
- The equipment is not weather-proof, and should not be stored in direct sunlight, at high ambient temperatures or locations that are damp or humid.
- Do not clean equipment with solvents, flammable liquids, or harsh abrasives.
- For specific equipment safety use and care, see Equipment Safety.


© Baumr-AG

## General Electrical Safety

- Inspect electrical equipment, extension cords, power bars, and electrical fittings for damage or wear before each use. Repair or replace damaged equipment immediately.
- Ensure all power sources conform to equipment voltage requirements and are disconnected before connecting or disconnecting equipment.
- When wiring electrically powered equipment, follow all electrical and safety codes.
- Always use a Residual Current Device (RCD) (GFCI) / Earth Leakage Circuit Breaker / Safety Switch when operating this item (electrical items only).
- High voltage / high current power lines may be present. Use extreme caution to avoid contact or interference with power lines. Electrical shock can be fatal.

## General Electrical Safety

- Electrically grounded equipment must have an approved cord and plug and be connected to a grounded electrical outlet.
- Do NOT bypass the ON/OFF switch and operate equipment by connecting and disconnecting the electrical cord.
- Do NOT use equipment that has exposed wiring, damaged switches, covers or guards.
- Do NOT use electrical equipment in wet conditions or in damp locations.
- Do NOT use electrical cords to lift, move or carry equipment.
- Do NOT coil or knot electrical cords, and ensure electrical cords are not trip hazards.

## General Service Information

- The equipment must be serviced or repaired at authorised service centres by qualified personnel only.
- Replacement parts must be original equipment manufacturer (OEM) to ensure equipment safety is maintained.
- Do NOT attempt any maintenance or repair work not described in this manual.
- After use, the equipment and components may still be hot – allow the equipment to cool and disconnect spark plugs and/or electrical power sources and/or batteries from it before adjusting, changing accessories, or performing repair or maintenance.
- Do NOT adjust while the equipment is running.
- Perform service-related activities in suitable conditions, such as a workshop.
- Replace worn, damaged or missing warning/safety labels immediately.

## Child Choking Hazard!




- **WARNING: CHOKING HAZARD - CHILDREN UNDER 8 YRS. CAN CHOKE OR SUFFOCATE ON SMALL PARTS. ADULT SUPERVISION REQUIRED.**
- Carefully inspect anything a baby or child could gain access to, including this product & packaging.
- Dangers include anything of a size that could become stuck or lodged in a baby or child's airway.
- Dangers include things like raw, hard fruit and vegetable pieces, large pieces of meat, bones or sausage skins, popcorn, nuts, hard lollies and corn chips, small magnets and batteries, coins, beads, marbles and small uninflated balloons, broken toys and smaller toys, buttons, keys, and coins. But there are also many more.
- Pay particular attention to accessories, nuts, bolts, screws, washers, caps, covers, loose parts, parts that could be removed or break off, pieces of packaging, staples, tape etc.
- In the case of any doubt, secure the item of concern in an appropriate manner, or completely remove the possibility of access by a baby or child.

## HAZARDOUS COMPONENTS!

- **BE AWARE THAT THE EQUIPMENT MAY INCLUDE HAZARDOUS COMPONENTS, SUCH AS BLADES, HOT SURFACES AND MOVING PARTS.**
- **MOVING BLADES CAN CAUSE SERIOUS INJURY AND EVEN DEATH IF USED IMPROPERLY OR WITHOUT SUFFICIENT PPE.**
- **DO NOT USE THIS EQUIPMENT ON UNEVEN SURFACES AND ALWAYS MAINTAIN GOOD BALANCE WHEN USING THIS EQUIPMENT. FAILURE TO DO SO MAY CAUSE SERIOUS INJURY.**
- **MAINTAIN A SECURE GRIP OF THE TRIGGER ASSEMBLY AT ALL TIMES.**

## READ ALL INSTRUCTIONS

- **⚠ WARNING: DUST GENERATED BY POWER SANDING, SAWING, GRINDING, DRILLING AND OTHER CONSTRUCTION ACTIVITIES MAY CONTAIN CHEMICALS KNOWN TO CAUSE CANCER, BIRTH DEFECTS OR OTHER REPRODUCTIVE HARM. EXAMPLES INCLUDE:**
- Lead from lead-based paints
- Crystalline silica from bricks, cement and other masonry products
- Arsenic and chromium from chemically treated timber
- The risk from exposure varies depending on how frequently this type of work is performed. To reduce exposure, work in a well-ventilated area and wear approved personal protective equipment, such as a dust mask designed to filter microscopic particles.

## IMPORTANT SAFETY INSTRUCTIONS

- **⚠ DANGER: THIS LAWN MOWER MUST BE OPERATED IN ACCORDANCE WITH THE SAFE OPERATING INSTRUCTIONS IN THIS MANUAL. AS WITH ANY POWER EQUIPMENT, OPERATOR CARELESSNESS OR ERROR CAN RESULT IN SERIOUS INJURY. THIS LAWN MOWER CAN AMPUTATE HANDS AND FEET AND THROW OBJECTS. FAILURE TO FOLLOW ALL SAFETY INSTRUCTIONS MAY RESULT IN SERIOUS INJURY OR DEATH.**
- **⚠ WARNING: WHEN USING AN ELECTRIC LAWN MOWER, ALWAYS FOLLOW BASIC SAFETY PRECAUTIONS TO REDUCE THE RISK OF FIRE, ELECTRIC SHOCK AND PERSONAL INJURY.**

## LAWN MOWER SAFETY INSTRUCTIONS

- **⚠ WARNING: READ ALL SAFETY WARNINGS AND INSTRUCTIONS. FAILURE TO FOLLOW THEM MAY RESULT IN ELECTRIC SHOCK, FIRE OR SERIOUS INJURY.**

## Work Area Safety

- Keep all bystanders, particularly children, away from the operating area to prevent contact with the moving blade or injury from thrown objects. Stop the lawn mower and any attachments if anyone enters the area. Contact with the moving blade or thrown objects may result in serious injury or death.
- Operate the lawn mower only in daylight or good artificial light. Poorly lit areas increase the risk of accidents.
- Do not operate the lawn mower in explosive atmospheres, such as in the presence of flammable liquids, gases or dust. The lawn mower may produce sparks that could ignite fumes or dust.
- Do not use the lawn mower in poor weather conditions, particularly when there is a risk of lightning. This reduces the risk of being struck by lightning.
- Thoroughly inspect the area where the lawn mower will be used. Remove all stones, sticks, wires, bones and other foreign objects. Thrown objects can cause serious injury.

## Electrical Safety

- Do not expose the lawn mower to rain or wet conditions. Water entering the lawn mower may increase the risk of electric shock.

## Personal Safety

- Use personal protective equipment. Always wear eye protection. Appropriate protective equipment reduces the risk of personal injury.
- Dress appropriately. Do not wear loose clothing or jewellery. Keep your hair and clothing away from moving parts. Loose clothing, jewellery or long hair may become caught in moving parts.
- Always wear long trousers when operating the lawn mower. Exposed skin increases the risk of injury from thrown objects.
- Always wear non-slip, protective footwear when operating the lawn mower. Do not operate the lawn mower barefoot or while wearing open footwear, such as sandals. Suitable footwear reduces the risk of foot injury from contact with the moving blade.
- Prevent unintentional starting. Ensure the switch is in the OFF position before connecting the lawn mower to a power source or battery pack, or before picking up or carrying it. Carrying the lawn mower with your finger on the switch or connecting it to power while the switch is on may cause an accident.
- Remove any adjusting key or spanner before starting the lawn mower. A key or spanner left attached to a rotating part may cause personal injury.
- Maintain firm footing and balance at all times. This provides better control of the lawn mower in unexpected situations.
- Stay alert, watch what you are doing and use common sense when operating the lawn mower. Do not operate it when tired or under the influence of drugs, alcohol or medication. A moment of inattention may result in serious injury.
- Do not allow familiarity gained from frequent use to make you complacent or ignore safety instructions. A careless action can cause serious injury within a fraction of a second.
- Stay within the operator zone behind the lawn mower handles to avoid contact with the blade or injury from thrown objects. Contact with the blade or thrown objects may result in serious injury.
- Do not touch the blades or other hazardous moving parts until they have completely stopped. This reduces the risk of injury from moving parts.

## Lawn Mower Use and Care

- Use the lawn mower and accessories in accordance with these instructions, taking into account the working conditions and the task to be performed. Using the lawn mower for purposes other than those intended may create a hazardous situation.
- Before each use, visually inspect the lawn mower to ensure the blades and blade assembly are correctly secured and are not worn or damaged. Loose, worn or damaged parts may increase the risk of injury.
- Keep all guards and safety devices correctly fitted and in good working order. Loose, damaged or faulty safety devices may cause personal injury.
- Keep all cooling air inlets clear of debris. Blocked air inlets may cause overheating or fire.
- Do not use the lawn mower if the switch does not turn it on and off. A lawn mower that cannot be controlled using the switch is dangerous and must be repaired.
- Do not operate the lawn mower on wet grass. Walk; never run. This reduces the risk of slipping, falling and personal injury.
- Do not operate the lawn mower on excessively steep slopes. This reduces the risk of losing control, slipping or falling.
- Do not force the lawn mower. Use the correct lawn mower for the task. The correct lawn mower will perform the task better and more safely at the rate for which it was designed.
- Be aware of the discharge direction of the lawn mower and any attachments. Never direct discharged material towards another person. Thrown objects may cause personal injury.
- Take extreme care when reversing or pulling the lawn mower towards you. Remain aware of your surroundings to reduce the risk of tripping.
- When mowing on slopes, maintain firm footing and mow across the slope, never up or down. Take extreme care when changing direction. This reduces the risk of losing control, slipping or falling.
- Activate the disabling device and remove all removable battery packs before adjusting, changing accessories or storing the lawn mower. These precautions reduce the risk of accidental starting.
- Keep handles and gripping surfaces dry, clean and free from oil and grease. Slippery handles and gripping surfaces may prevent safe handling and control of the lawn mower.
- Regularly inspect the grass catcher for wear or damage. A worn or damaged grass catcher may increase the risk of personal injury.
- Before removing the grass catcher, switch off the motor and wait for the blade to stop completely. The blade continues rotating after the blade control is released. Never place any part of your body near the blade until the motor is switched off and the blade has completely stopped. Contact with a moving blade may cause serious injury.
- Before clearing the discharge chute, switch off the motor, wait for the blade to stop completely, activate the disabling device and remove all removable battery packs. The blade continues rotating after the blade control is released. Never place any part of your body near the blade until the motor is switched off and the blade has completely stopped. Contact with a moving blade may cause serious injury.

- Before cleaning or inspecting the lawn mower, switch off the motor, wait for the blade to stop completely, activate the disabling device and remove all removable battery packs. Accidental contact with the blade or other moving parts may cause personal injury.
- Maintain the lawn mower and accessories. Check for misaligned, binding or broken moving parts and any other condition that may affect operation. If damaged, have the lawn mower repaired before use. Poorly maintained lawn mowers cause many accidents.
- Store the lawn mower out of the reach of children when not in use. Do not allow anyone unfamiliar with the lawn mower or these instructions to operate it. Lawn mowers are dangerous in the hands of untrained users.

## Battery Lawn Mower Use and Care

- Use the lawn mower only with the specified battery packs. Using other battery packs may cause injury or fire.
- Recharge the battery packs only with the charger specified by the manufacturer. A charger suitable for one type of battery pack may cause a fire when used with another type.
- Follow all charging instructions. Do not charge the battery packs or lawn mower outside the temperature range specified in these instructions. Incorrect charging or charging outside the specified temperature range may damage the battery and increase the risk of fire.
- Do not use a battery pack or lawn mower that is damaged or modified. Damaged or modified batteries may behave unpredictably and cause fire, explosion or injury.
- Do not expose the battery packs or lawn mower to fire or temperatures above 130 °C. Exposure to fire or excessive temperatures may cause an explosion.
- Battery fluid may leak under extreme conditions. Avoid contact. If accidental contact occurs, rinse the affected area with water. If the fluid enters your eyes, rinse them with water and seek medical attention. Battery fluid may cause irritation or burns.
- When battery packs are not in use, keep them away from metal objects such as paper clips, coins, keys, nails and screws that could connect one terminal to another. Short-circuiting the battery terminals may cause burns or fire.

## Servicing

- Have the lawn mower serviced by a qualified repair technician using only identical replacement parts. This helps maintain the safety of the lawn mower. Parts that do not meet the original equipment specifications may affect performance and compromise safety.
- Never service a damaged battery pack. Battery packs must only be serviced by the manufacturer or an authorised service provider.

## BATTERY PACK SAFETY WARNINGS

- Do not modify, repair, dismantle, open or shred the battery pack.
- Do not expose the battery pack or lawn mower to fire or temperatures above 130 °C. Exposure to fire or excessive temperatures may cause an explosion.
- Do not short-circuit the battery pack. Do not store battery packs loosely in a box or drawer where they may contact each other or other metal objects. When not in use, keep battery packs away from paper clips, coins, keys, nails, screws and other metal objects that could connect one terminal to another. Short-circuiting the terminals may cause burns or fire.
- Do not subject the battery pack to mechanical impact.
- Observe the positive (+) and negative (–) markings on the battery pack and lawn mower, and ensure the battery pack is installed correctly.
- Keep battery packs out of the reach of children.
- Use only battery packs recommended by the manufacturer for this lawn mower.
- Keep battery packs clean and dry.
- If the battery terminals become dirty, wipe them with a clean, dry cloth.
- Charge the battery pack before use. Always use the specified charger and follow the charging instructions provided by the manufacturer.
- Do not leave the battery pack charging for extended periods when it is not in use.
- After extended storage, the battery pack may need to be charged and discharged several times to achieve maximum performance.
- Battery packs perform best at normal room temperature: 20 °C ± 5 °C.
- Use the battery pack only for its intended purpose. Do not use a battery pack or lawn mower that is damaged or modified. Damaged or modified batteries may behave unpredictably and cause fire, explosion or injury.
- Remove the battery pack from the lawn mower when it is not in use.
- Dispose of used battery packs in accordance with local regulations. Do not dispose of them in household waste. Take them to an approved battery recycling facility.
- Do not charge the battery pack outdoors, in rain or in wet locations.
- Recharge the battery pack only with the charger specified by the manufacturer. A charger suitable for one type of battery pack may cause a fire when used with another type.
- Use the lawn mower only with the specified battery packs. Using other battery packs may cause injury or fire.
- Battery fluid may leak under extreme conditions. Avoid contact. If accidental contact occurs, rinse the affected area with water. If the fluid enters your eyes, rinse them with water and seek medical attention. Battery fluid may cause irritation or burns.

## SAVE THESE INSTRUCTIONS

- Refer to these instructions regularly and use them to instruct anyone who may operate the lawn mower. If lending the lawn mower to another person, provide these instructions to help prevent misuse and injury.

# Safety Symbols

The product may have safety warning labels attached to it, explained below. Understand the symbols on your product and their meanings. If any stickers become unreadable, unattached etc., replace them.



**Flammable Material Hazard**
Flammable liquids, gases, or substances etc may present. Avoid ignition sources and open flames. Danger of fire.



**Read User Manual**
Read and fully understand product safety warnings, operation, procedures etc before using the product.



**Use Hand Protection**
Wear appropriate hand protection and take due care as the product or use of the product may present hand hazards.




**Carbon-Monoxide Hazard**
Do not use the product in confined areas or without adequate ventilation. Carbon-monoxide poisoning can be fatal.



**Electrocution / Electrical Shock Hazard**
High voltage or high current electricity may be present or required by the product. Take due care when handling electrical products, cables, plugs and leads. Electrical shock can be fatal.



**Toxic Fumes / Dust Hazard**
Using the product or by-products from use may produce fumes, smoke or particles that could be harmful if inhaled. Wear appropriate breathing protection and have adequate ventilation.



**Explosive Material Hazard**
Combustible liquids, gases, or substances etc may be present. Avoid ignition sources and open flames. Danger of explosion.



**Cutting / Amputation Hazard**
The product may have blades, edges or mechanical devices that can cause severe cut injury to fingers, limbs etc. Take due care when handling and using the product.



**Crush Hazard**
The product may have blades, edges or mechanical devices that can cause severe crush injury to fingers, limbs etc. Take due care when handling and using the product.



**Single Operator Only**
The product must be operated by a single person only. More than one person operating the product may introduce additional hazards.



**Use Face Protection**
Wear appropriate full-face protection and take due care as the product or use of the product may present face and eye hazards.



**Use Foot Protection**
Wear appropriate foot protection and take due care as the product or use of the product may present foot hazards.



**Use Eye / Ear / Head Protection**
Wear appropriate eye and / or ear and / or head protection and take due care as the product or use of the product may present eye, hearing, and head hazards.



**Running Hazard**
Do not run on or near the product as doing so may present a fall hazard.



**Diving Hazard**
Do not dive into the product as doing so may present a neck / head injury hazard.



**Adult Supervision Required**
Always supervise children and other users of a product to prevent drowning or injury.



**Skin Penetration / Puncture Hazard**
The product may produce pressure, emit liquids or objects that can cause severe injury to fingers, limbs, blood etc. Take due care when handling and using the product.



**Hot Surface Hazard**
Be aware that the product may produce high temperatures and hot surfaces that can cause burn injuries.



**Flying Debris Hazard**
Be aware that the product or use of the product may present hazards produced by flying debris. Wear appropriate clothing and protective devices.




**Moving Parts Hazard**
Be aware that the product contains or uses mechanical devices that move or rotate. Always wait for moving parts to stop fully before handling the product, adjusting, maintenance etc.


© Baumr-AG

| | | | |
|---|---|---|---|
| <br>**Carbon-Monoxide Hazard**<br>Do not use the product in confined areas or without adequate ventilation. Carbon-monoxide poisoning can be fatal. | <br>**Pull Hazard**<br>Be aware that the product contains or uses mechanical devices that can pull in objects and can cause severe injury to fingers, limbs etc. Take due care when handling and using the product. | <br>**Slope / Fall Injury Hazard**<br>Be aware that using the product on sloping surfaces or in slippery conditions may present additional dangers from falls and contact with blades, moving parts, hot surfaces etc. | <br>**"Slam Dunk" Warning**<br>Do NOT attempt "slam dunk" manoeuvres as this may result in severe injury due to falling, product breakage or collapse etc. |
| <br>**Electrocution / Electrical Shock Hazard - Outdoor**<br>High voltage or high current electricity may be present or required by the product. Do NOT use in rain, damp, or wet conditions. Electrical shock can be fatal. | <br>**Electrocution / Electrical Shock Hazard - Disconnect**<br>High voltage or high current electricity may be present or required by the product. Always disconnect the product from the electrical supply before handling the product, adjusting, maintenance etc. | <br>**Power Line Electrocution Hazard**<br>High voltage / high current power lines may be present. Use extreme caution to avoid contact or interference with power lines. Electrical shock can be fatal. | <br>**"Kick-Back" Hazard**<br>High level of "kick-back" hazard that can cause the machine to suddenly rotate towards operator. Kick-back injury can be fatal. |
| <br>**Winch Operator Position Hazard**<br>Do NOT stand between winch and load. Do NOT use winch to move people. | <br>**Winch Lift Hazard**<br>Do NOT LIFT load vertically. Use machine to PULL only. | <br>**Cable Hazard**<br>Ensure that load bearing cable is not kinked or knotted. | <br>**Winch Cable Hazard**<br>Ensure that there is a minimum number of cable coils on winching mechanism. |
| <br>**Winch Hook Hazard**<br>Carry hook to load – do NOT throw or run. | <br>**Flash / Blinding Hazard**<br>Wear appropriate eye protection for welding. Direct exposure to weld arcs may cause permanent eye injury. | <br>**Laser Hazard**<br>Laser may be in use – do NOT look directly at laser or allow others to. | <br>**Choking Hazard**<br>Children under 8 yrs. Can choke or suffocate on small parts. Adult supervision required. |

# Table of Contents

**Safety** ..... **2**
Safety Symbols ..... 6
**Parts Identification** ..... **9**
**Assembly** ..... **10**
Unpacking ..... 10
Assembling The handle ..... 10
Fitting and Removing the Mulching Plug ..... 11
Assembling the Grass Catcher ..... 12
Fitting And Removing the Grass Catcher ..... 13
Adjusting the Cutting Height ..... 14
Installing and Removing the Battery Packs ..... 14
**Operation** ..... **16**
Starting and Stopping the Lawn Mower ..... 16
Mowing Tips ..... 17
Mowing On Slopes ..... 17
Walking with Your Mower ..... 18
Charging Your Battery ..... 19
**Lithium Battery Care and Maintenance** ..... **20**
Top 3 Battery Care Requirements ..... 20
**Maintenance** ..... **22**
General Maintenance ..... 22
Cleaning the Lawn Mower ..... 22
Replacing the Blade ..... 23
Sharpening the Blade ..... 24
Sharpening Frequency ..... 24
Sharpening the Blade in a Vice ..... 24
Lubrication ..... 25
**Storage** ..... **26**
**Troubleshooting** ..... **27**
**Specifications** ..... **28**

# Parts Identification

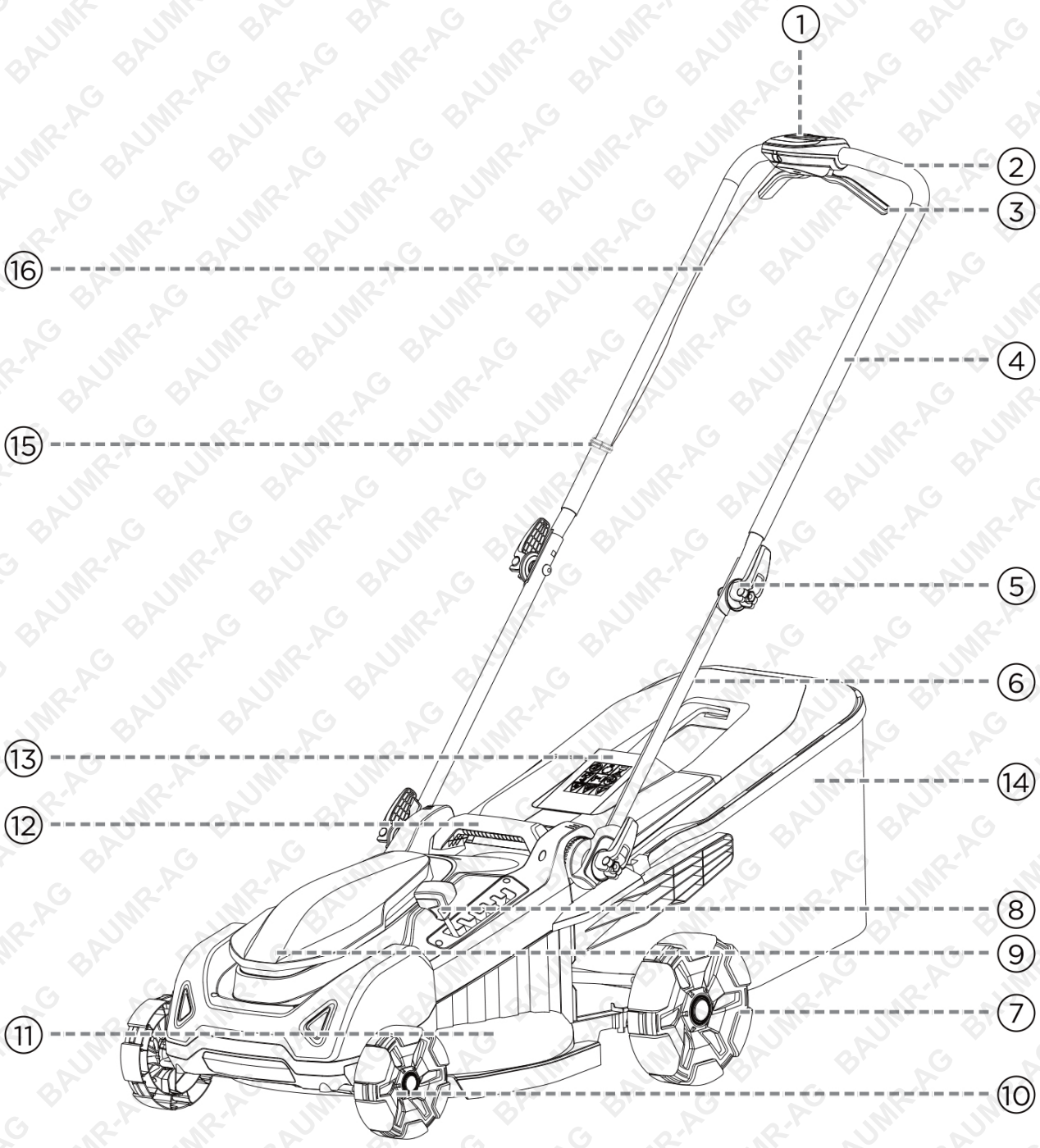


| No. | Name | No. | Name |
|---|---|---|---|
| 1 | Lock-off button | 9 | Battery compartment cover |
| 2 | Push handle | 10 | Front wheel |
| 3 | ON/OFF trigger | 11 | Mower deck |
| 4 | Upper handle | 12 | Carrying handle |
| 5 | Quick-assembly set | 13 | Rear discharge cover |
| 6 | Lower handle | 14 | Grass catcher |
| 7 | Rear wheel | 15 | Cable clamp |
| 8 | Cutting height adjustment lever | 16 | Electrical cable |

# Assembly

**WARNING: To prevent accidental starting and serious injury, always remove the battery pack before assembling parts.**

**WARNING: Do not modify the lawn mower or use accessories not recommended for it. Unauthorised modifications or accessories may create a hazard and cause serious injury.**

**WARNING: Do not start the lawn mower until it is fully assembled.**

## Unpacking

1. This lawn mower requires assembly.
2. Remove all components from the packaging and check them against the supplied contents list.
3. Carefully inspect the lawn mower for damage that may have occurred during transport.
4. Do not discard the packaging until you have inspected the lawn mower and confirmed that it operates correctly.
5. If any parts are missing or damaged, contact the manufacturer.

## Assembling The handle

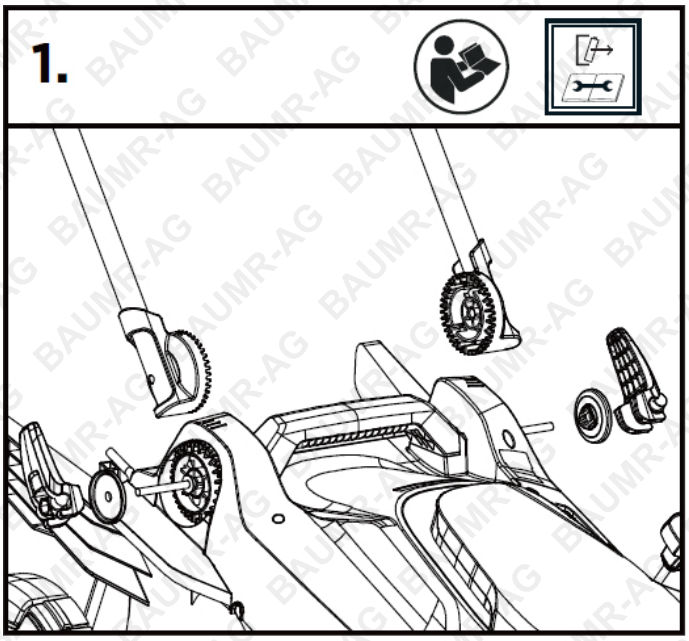


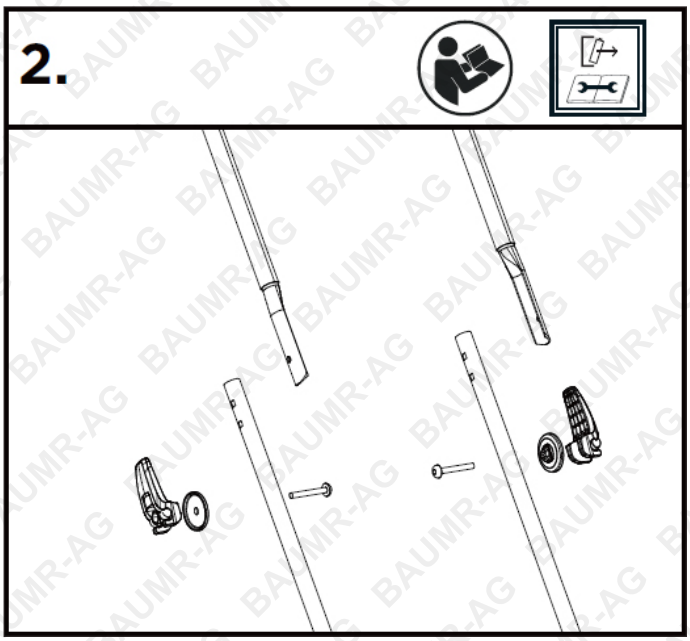


**WARNING: Do not start the lawn mower until it is fully assembled.**

1. The lawn mower is supplied with the lower handle folded, the quick-assembly fasteners loosened and the upper handle detached.
2. Align the toothed joints between the lower handle and the lawn mower. Adjust the lower handle to one of the three positions to suit the operator’s height. Secure the quick-assembly fasteners by hand. Do not overtighten. See Fig. 1.
3. Align the upper handle with the lower handle as shown. Insert the bolts through the holes on both sides, then secure the quick-assembly fasteners by hand. Do not overtighten. See Fig. 2.

# Fitting and Removing the Mulching Plug

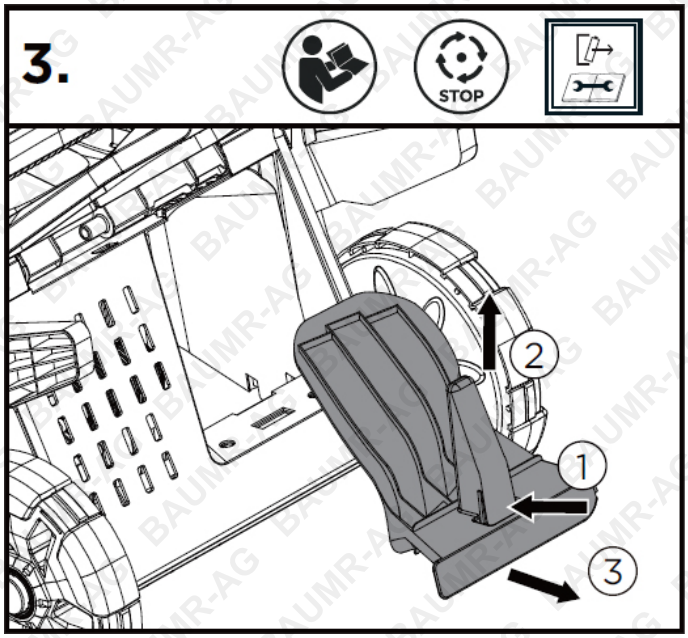


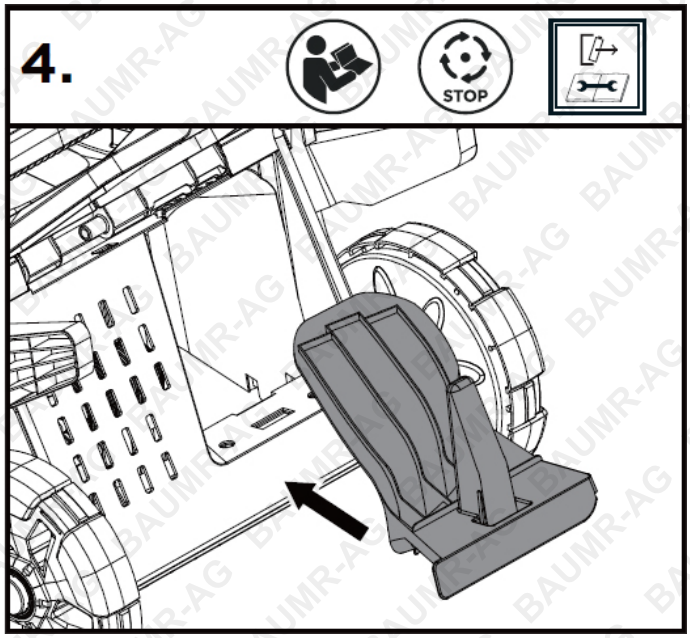


**NOTICE: The mulching plug is fitted to the lawn mower before delivery. Remove the mulching plug when using the grass catcher.**

## Removing the Mulching Plug

1. Lift and hold the rear discharge cover.
2. Firmly grip the marked area of the mulching plug.
3. Pull the plug upwards, then outwards to remove it from the rear discharge opening.

## Fitting the Mulching Plug

When mulching, align the plug with the rear discharge opening and push it fully into place.

# Assembling the Grass Catcher

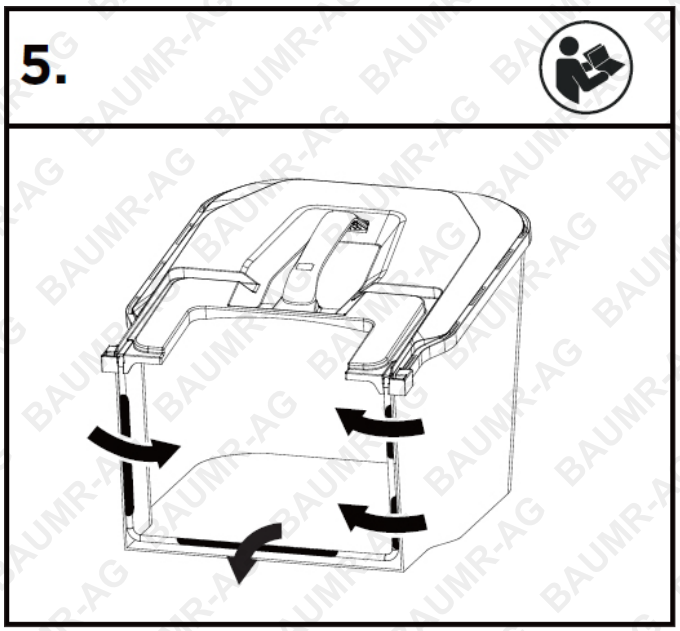


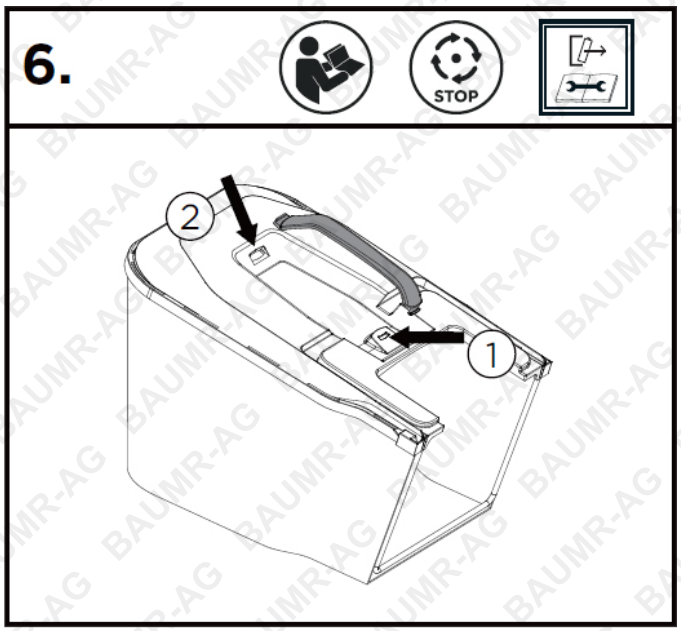


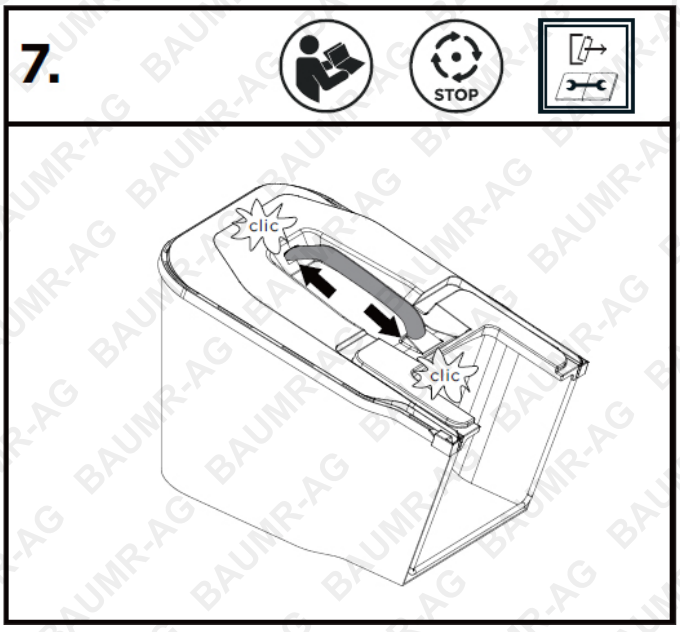


1. Unfold the grass catcher as shown.
2. Secure the fastening strips along the edges to the frame rods.
3. Fit the handle to the grass catcher as shown.

# Fitting And Removing the Grass Catcher

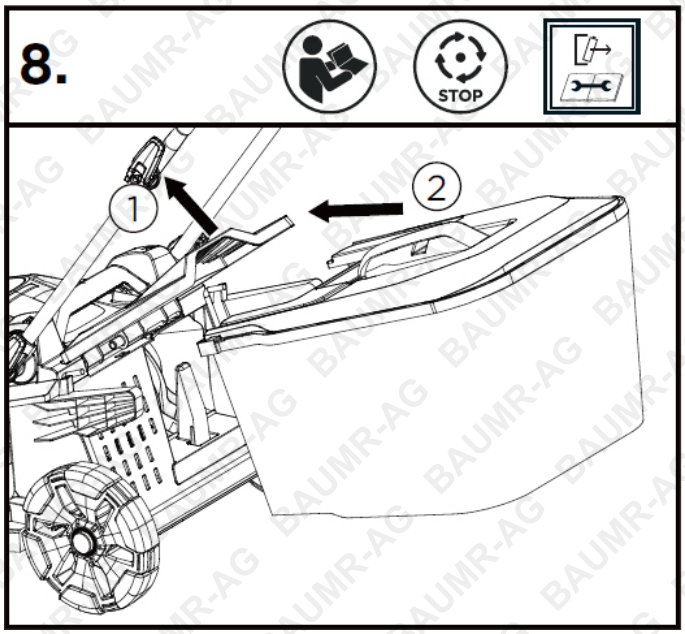


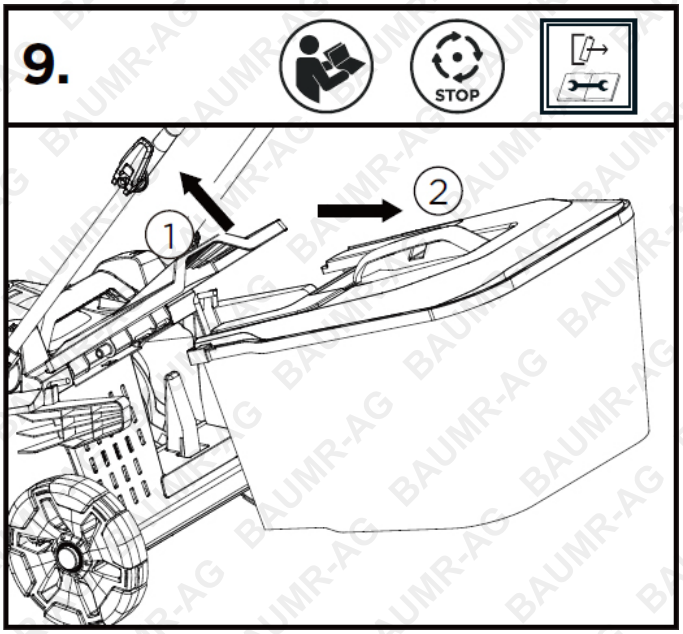


**WARNING: Before fitting, removing or adjusting the grass catcher, switch off the motor, remove the battery pack and wait for the blade to stop completely.**

## Fitting the Grass Catcher

1. Lift and hold the rear discharge cover.
2. Hold the grass catcher by its handle and fit it onto the hooks on both sides of the lawn mower.
3. Lower the rear discharge cover so that it rests securely on the grass catcher. See Fig. 8.

## Removing the Grass Catcher

1. Lift and hold the rear discharge cover.
2. Lift the grass catcher off the hooks on both sides. See Fig. 9.
3. Lower the rear discharge cover.

**WARNING: Never start or operate the lawn mower unless the grass catcher is correctly fitted and the rear discharge cover rests securely on top of it.**

**WARNING: The grass catcher is subject to wear during normal use. Inspect it regularly and replace it immediately if it shows signs of wear, damage or deterioration. Use only a grass catcher approved by the manufacturer for this lawn mower.**


© Baumr-AG

# Adjusting the Cutting Height

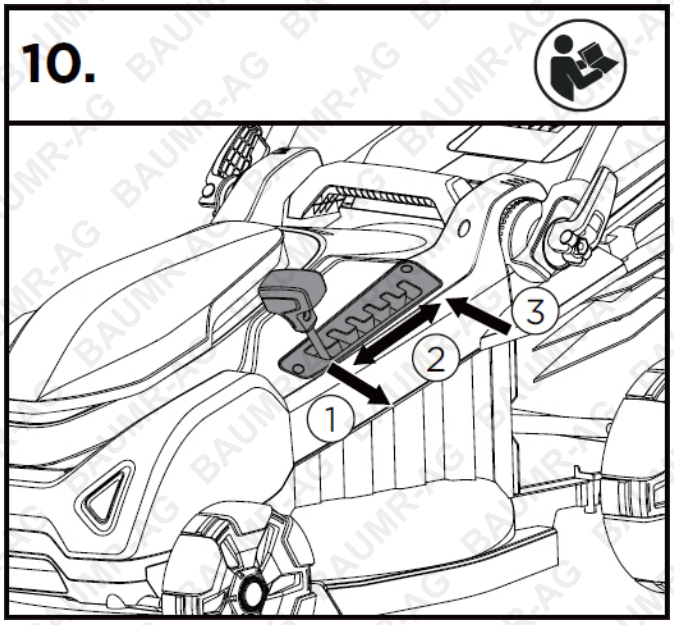


**WARNING: Before adjusting the cutting height, switch off the motor, remove the battery pack and wait for the blade to stop completely.**

**WARNING: Keep your feet away from the mower deck while adjusting the cutting height.**

1. Pull the cutting height adjustment lever out of its current position.
2. Move the lever forwards or backwards to select the required cutting height.
3. Secure the lever in one of the six positions.

The cutting height can be adjusted from 25 to 75 mm. Ensure the lever is securely engaged before operating the lawn mower.

# Installing and Removing the Battery Packs

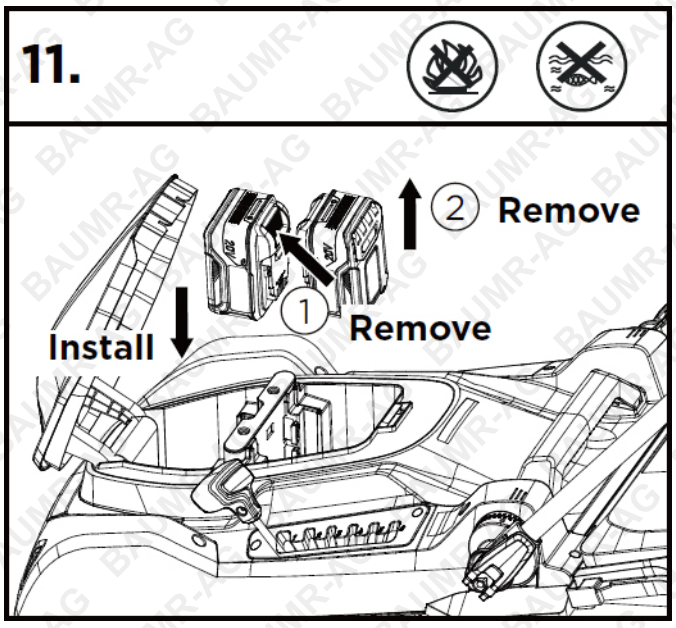



© Baumr-AG

**NOTICE: Do not use excessive force when installing the battery packs. The lawn mower operates only when both battery packs are installed. Do not use old and new battery packs together. Always use two matching battery packs of the same type, capacity and charge level. Charge both battery packs at the same time.**

## Installing

1. Align each battery pack correctly with its battery compartment.
2. Push each battery pack fully into place until it clicks and locks securely.

## Removing

1. Press the battery release button.
2. Pull the battery pack out of its compartment.
3. Repeat for the second battery pack.

# Operation

## Starting and Stopping the Lawn Mower

**WARNING: The lawn mower may throw foreign objects, causing serious eye injuries to the operator or bystanders. Always wear suitable eye protection while operating, adjusting or repairing the lawn mower.**

**WARNING: Keep all people and pets at least 30 m away while the lawn mower is operating.**

**WARNING: The blade continues rotating for several seconds after the lawn mower is switched off. Wait for the motor and blade to stop completely before restarting the lawn mower.**

**CAUTION: Do not bypass or interfere with the lock-off button or on/off trigger.**

### Starting the Lawn Mower

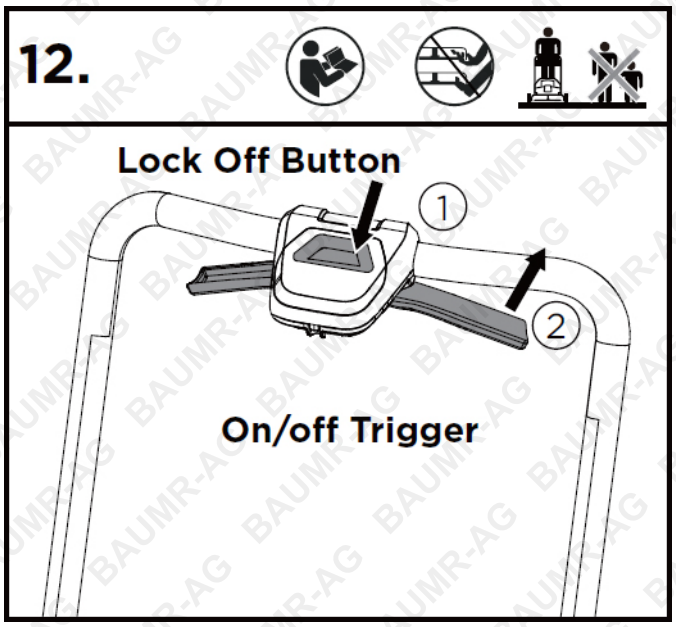


1. Install both battery packs and close the battery compartment cover.
2. Press and hold the lock-off button.
3. While holding the lock-off button, pull the on/off trigger towards the handle.
4. Release the lock-off button. The lawn mower will start.

### Stopping the Lawn Mower

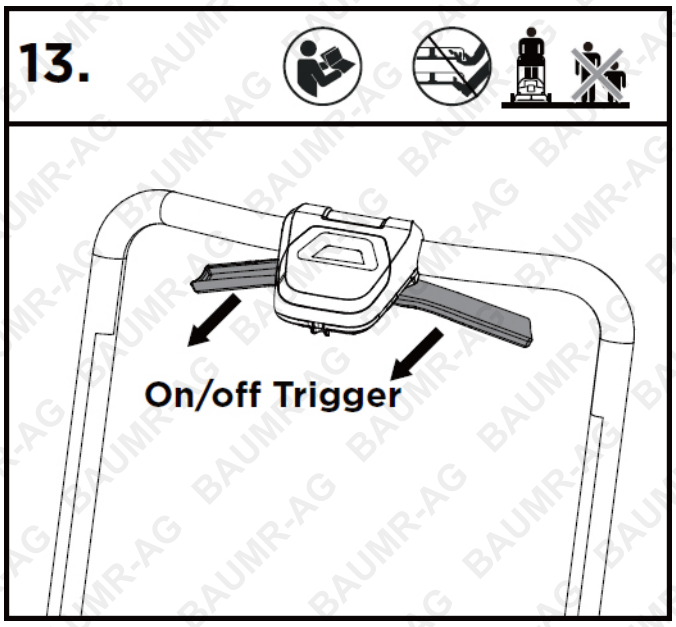


1. Release the on/off trigger completely.
2. The electric brake will stop the blade within approximately 3 seconds.

## Mowing Tips

**NOTICE: A sharp blade improves cutting performance, particularly in long grass. Check the blade regularly and have it sharpened or replaced when required.**

Before mowing, remove stones, sticks, wires and other objects from the lawn. Objects struck by the blade may be thrown in any direction, causing serious injury or property damage.

**WARNING: If the lawn mower strikes a foreign object, switch off the motor, remove both battery packs and inspect the lawn mower for damage. Have any damage repaired before restarting the lawn mower. Excessive vibration may indicate damage and must be inspected promptly.**

- For best results, mow in straight, overlapping passes across the lawn.
- When mowing thick grass, reduce your walking speed to improve cutting and grass discharge.
- To maintain a healthy lawn, remove no more than one-third of the grass height in a single cut.
- As a general guide, maintain the grass at approximately 38–50 mm during cooler months and 50–83 mm during hotter months.

## Mowing On Slopes

Slopes increase the risk of slipping, falling and losing control. Take extra care when mowing on slopes. Do not mow on slopes steeper than 15°.

### DO

- Mow across the slope, never up and down.
- Take extreme care when changing direction.

- Watch for holes, ruts, rocks, hidden objects and uneven ground that may cause you to slip or trip. Long grass may conceal obstacles.

### DO NOT

- Do not mow near steep edges, drains, ditches or embankments where you could lose your footing or balance.
- Do not mow on slopes steeper than 15°, equivalent to a rise of approximately 0.75 m over a horizontal distance of 3 m. Refer to the slope guide.
- Do not mow wet grass. Slippery or unstable ground may cause you to fall.

## Walking with Your Mower

**WARNING: Always observe the strictest safety procedures when using the lawnmower. Carefully read the safety instructions in this manual before using the lawnmower.**

**WARNING: Never open the ejector flap when the grass bag has been detached (to be emptied) and the engine is still running. The rotating blade can cause serious injuries!**

1. Select your required setting.
2. Start the engine and allow it to run and set it to the required speed.
3. Keep a firm grip on the upper handle with engine stop/start lever and drive lever (clutch lever) dosed and walk along with its self-propelling to start mowing.

### When Mowing:

- Walk. never run with the mower. Be very careful when mowing uneven or rough ground.
- Mow across slopes. never up and down.
- Be careful when changing the direction of the mower on a slope.
- Do not mow excessively steep slopes.

**Note: Grass clippings can clog underneath the mower deck, preventing the blades from turning. This can overheat the engine, causing excessive wear to engine components, reducing the lawn mower's overall lifespan or catastrophic failure of engine bearings and pistons.**

**Clogging occurs if you mow wet, long, or lush grass. For the best result, mow when the grass is dry and use a whipper snipper to reduce the height of grass longer than 15cm (6”) before mowing on the highest cutting setting.**

- Grass grows at different rates at different times of the year. Never use the lowest cutting height for the first cut of the season or in drought conditions.
- Only about one third of the grass height should be cut.
- When mowing with the mulching function, do not cut high or wet grass to ensure that the cut grass can be scattered efficiently. When you have been cutting for several minutes, please stop the mower, and clean the blade and the deck.
- Do not remove grass debris in the mower casing or on the blade by hand or with your feet. Instead, use suitable tools such as a brush or broom.

**WARNING: Do not allow familiarity with the lawn mower to make you careless. A moment of inattention may cause serious injury.**

**WARNING: Do not use attachments or accessories that are not recommended by the manufacturer. Unapproved attachments or accessories may cause serious injury.**

**WARNING: Always wear safety glasses that comply with AS/NZS 1337.1 and provide side protection. Wear hearing protection when required. Failure to wear suitable eye protection may result in thrown objects entering your eyes and causing serious injury.**

# Charging Your Battery

**WARNING: Charge the battery in a dry, well-ventilated area away from combustible materials and ignition sources.**

**NOTICE: Lithium-ion batteries are supplied partially charged. Fully charge the battery before first use.**

**NOTICE: Refer to the battery pack instructions for information about the indicator lights and charging precautions.**


© Baumr-AG

# Lithium Battery Care and Maintenance

## Top 3 Battery Care Requirements

1. **Charge battery before first use**. The battery may arrive with some charge, regardless of this the battery must be charged for 2 hours on the initial charge and 2 hours for each subsequent charge.
2. **Charge battery immediately when it is depleted.** Do not store a depleted battery. This will permanently impact the life of the battery. If the battery is going to be stored for a period of time, fully charge the battery before storing.
3. **Disconnect battery when not in use**. To prolong the life of a battery, disconnect it from the unit when not in use. Disconnect chargers from the battery once charged.

To ensure the battery maintains optimum performance, follow the guidelines outlined below.

- For best results, charge batteries in temperatures between 10°C and 30°C
- When battery is charged, disconnect the charger from the power supply and remove the battery from the charger.
- If a battery is stored or otherwise unused for an extended period, and the battery has no charge remaining when you check it, consider it to be damaged. Do not attempt to recharge it or to use it. Replace it with a new battery.
- Use only with the battery charger specified by the manufacturer.
- Ensure that the battery charger electrical cord is not subjected to damage or stress. Do not operate the battery charger if it has a damaged electrical cord or plug.
- Do not use the charger in wet areas or expose it to rain or water.
- The typical estimated life of a Lithium-Ion battery is about two to three years or 300 to 500 charge cycles, whichever occurs first. One charge cycle is a period of use from fully charged, to fully discharged, and fully recharged again.
- Explosion hazard – protect the battery against heat, for example, direct sunlight and fire. Do not store batteries in vehicles or locations subject to heat.
- Batteries can explode in the presence of an ignition source, such as a pilot light. To reduce the risk of serious personal injury, never use any cordless product in the presence of open flame. Exploding batteries can propel debris and chemicals.
- Do not open the battery – danger of short-circuiting and/or explosion.
- Do not attempt to destroy or disassemble the battery pack or remove any of its components.
- Do not touch the battery terminals with metal objects and/or body parts as short-circuit and/or personal injury may result.
- Explosion hazard – do not open and/or short-circuit the battery.
- Poison hazard – battery leakage (liquid ejection). Under extreme conditions, liquid may be ejected from the battery – avoid contact. If contact accidentally occurs, immediately seek medical attention, and flush with water. If liquid contacts eyes, immediately seek medical attention, flush with clean water for at least 10 minutes. Liquid ejected from the battery may cause irritation or burns.
- Dispose of non-serviceable batteries in an environmentally responsible manner and according to local regulations.

Failure to adhere to the requirements above may result in the battery becoming inoperative or battery life being reduced. In extreme cases or abuse, battery overheating, or fire may result.

# DANGER - BATTERY CHARGING, USE AND STORAGE

Like mobile phones, laptops, cordless vacuum cleaners etc, this product may contain or be related to a lithium ion battery pack (lithium ion batteries and lithium ion battery related items only). Lithium ion batteries allow fast charging and high capacities, however care must be taken to reduce chances of a fault, and increase safety in case a fault occurs. Catastrophic incidents involving lithium ion batteries have a tendency to result in large amounts of smoke and fire. Be sure to follow the points below to reduce the likelihood of danger whenever you use, charge or store any lithium ion battery.

- Never charge a battery that has been damaged or subjected to a forceful impact.
- Never charge a battery that has been exposed to moisture or water.
- Never charge a battery with a charger that wasn't supplied with the battery.
- Never use a battery in a device that it wasn’t specifically designed for.
- Never use a battery with a modified or damaged device.
- Never modify the battery, product, charger, circuitry or wiring.
- Never charge a battery in an exit path that may be used by people to leave a room or building in case of an emergency, for example, the hallway or foyer of a residence.
- Never charge a battery in an area or building that doesn't have the recommended number of working smoke detectors that have been tested in accordance with local guidelines.
- Never charge a battery when the battery or charger is displaying a problem or charging incorrectly.
- Always charge batteries on a non-combustible surface, for example, on a concrete floor.
- Always charge batteries at least 3m away from anything combustible, such as floors, wall surfaces, furniture, storage shelves etc.
- Always charge batteries in an open area (outside if possible) ensuring the battery and charger are away from moisture and water.
- Always disconnect batteries from the charger after charging.
- Always remove or disconnect batteries from the device/product when not in use.
- Always ensure batteries are charged under adult supervision. Do not charge unattended. Do not charge batteries while no one is home or while people are sleeping.
- Keep batteries away from heat and moisture.
- Damaged batteries should be disposed of through your local e-waste collection service.
- Avoid mixing and matching chargers. Unplug products when fully charged, and charge batteries in a cool, dry place away from combustible materials like beds, lounges, or carpet.
- During charging and use, check your lithium-ion batteries for overheating, signs of swelling, leaking, or venting gas. Immediately stop using your product if these signs are present.
- Allow batteries to cool after use and before charging.

# Maintenance

**ATTENTION: Surface corrosion will occur on metal surfaces over time and the rate of oxidation depends on factors such as proximity to the ocean and humidity or condensation of water vapour on metal surfaces. To mitigate this, WD40 can be used to remove surface corrosion then, when applied periodically, it will prevent rust from forming.**

**WARNING: Use only identical replacement parts. Other parts may create a hazard or damage the lawn mower. All repairs must be performed by a qualified service technician.**

**WARNING: Remove both battery packs before servicing, cleaning, changing attachments or removing accumulated material.**

**WARNING: Replace all worn or damaged parts using only genuine replacement parts approved by the manufacturer.**

**WARNING: Do not use the lawn mower if it is damaged or produces abnormal noise or vibration. Have the fault repaired before further use.**

## General Maintenance

- Do not attempt to repair the lawn mower yourself.
- Regularly check that all fasteners are secure and the lawn mower is in safe working condition.
- Before each use, inspect the lawn mower for:
  - Loose fasteners
  - Misaligned or binding moving parts
  - Cracked, broken or damaged components
  - Any other condition that may affect safe operation

## Cleaning the Lawn Mower

**WARNING: Always remove both battery packs before cleaning, servicing or transporting the lawn mower.**

- Clean the underside of the mower deck after each use. Grass clippings, leaves, dirt and other debris may accumulate.
- Wipe the lawn mower with a damp cloth.

# Replacing the Blade

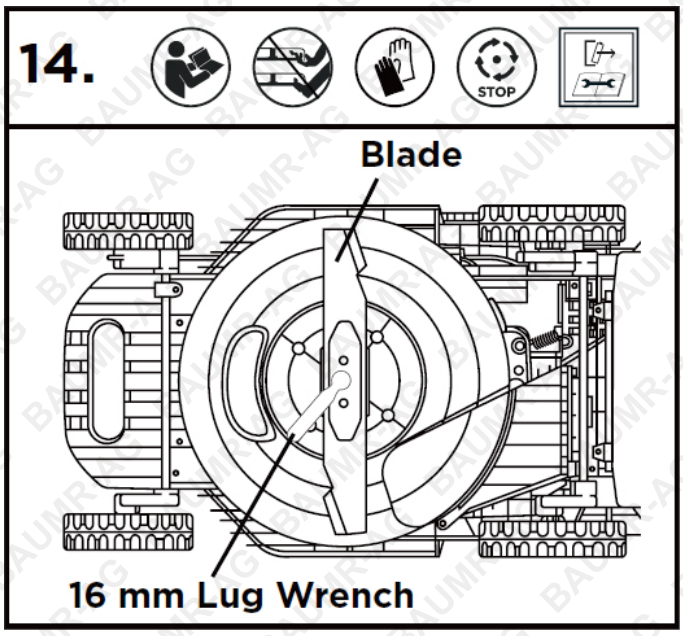


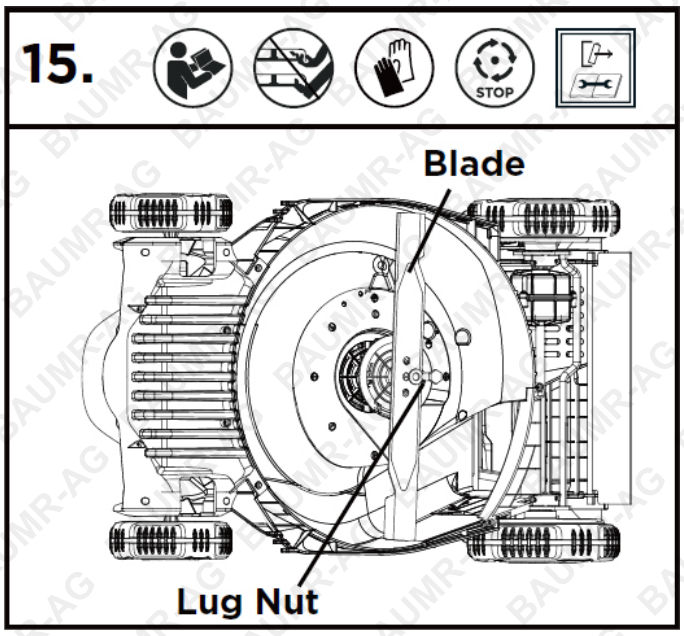


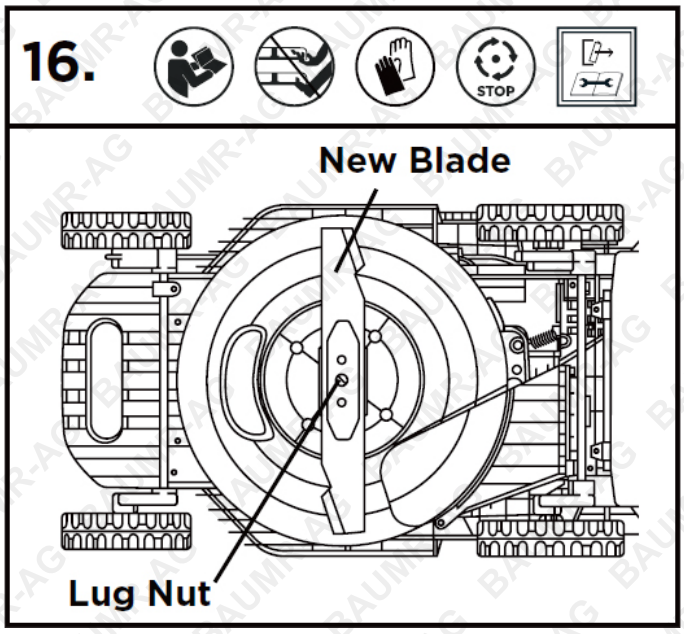


**WARNING: Always remove both battery packs before servicing or transporting the lawn mower. Wear heavy-duty gloves and wrap the blade’s cutting edges with thick cloth or another suitable material.**

1. Remove both battery packs.
2. Carefully place the lawn mower on its side as shown to expose the underside of the mower deck.
3. Hold the blade securely using a cloth or heavy-duty gloves.
4. Using a 16 mm spanner, loosen the blade retaining nut by turning it anticlockwise. Remove the nut and blade. See Figs. 14 and 15.
5. Fit the replacement blade in the same orientation as the original blade.
6. Refit the original retaining nut and tighten it to 20–25 N·m. See Fig. 16.

# Sharpening the Blade

**WARNING: Remove both battery packs before removing, sharpening or fitting the blade. Wear heavy-duty gloves or wrap the cutting edges with thick cloth to protect your hands.**

**WARNING: Wear suitable eye protection when removing, sharpening or fitting the blade.**

**WARNING: A worn, bent, cracked or damaged blade may break and throw fragments, causing serious injury. Inspect the blade regularly. Do not operate the lawn mower with a damaged blade.**

**NOTICE: Keep the blade sharp for optimum cutting and mulching performance. A blunt blade will not cut grass cleanly or mulch effectively.**

A blunt blade may be sharpened. Replace the blade if it is excessively worn, bent, cracked or otherwise damaged.

## Sharpening Frequency

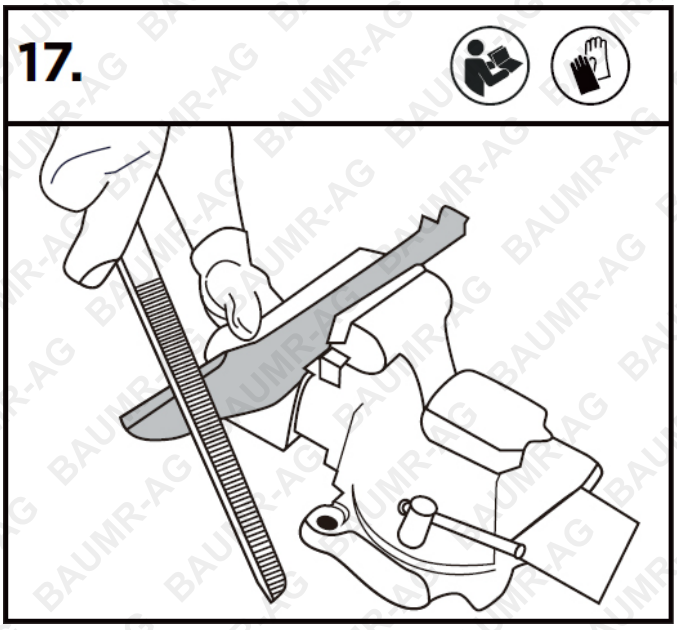


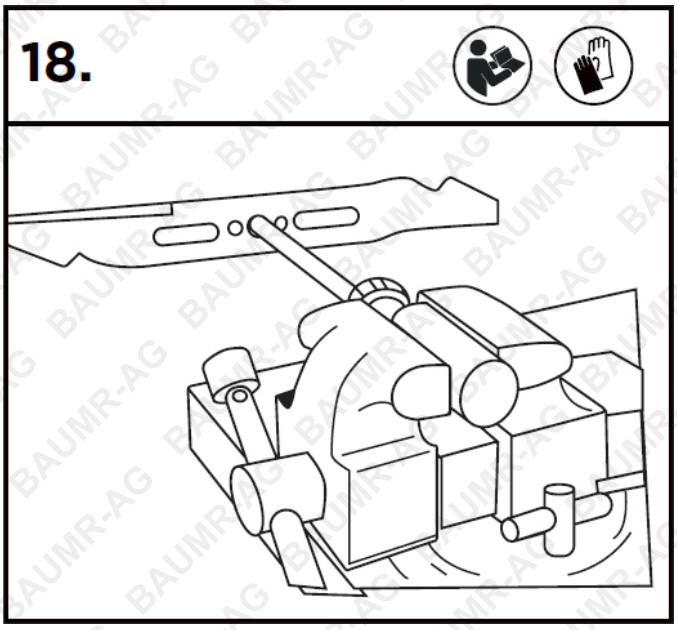


Under normal conditions, sharpening the blade twice during each mowing season is usually sufficient. Sandy soil dulls the blade more quickly. Sharpen the blade more frequently when mowing lawns with sandy soil.

When sharpening the blade:

- Keep the blade correctly balanced.
- Maintain the original cutting angle.
- Sharpen both cutting edges, removing an equal amount of material from each end.

# Sharpening the Blade in a Vice

1. Remove the blade. Refer to Replacing the Blade.
2. Secure the blade in a vice. See Fig. 17.
3. Wear suitable eye protection and heavy-duty gloves.
4. Carefully sharpen each cutting edge using a fine-tooth file or sharpening stone. Maintain the original cutting angle.
5. Check the blade balance:

- Secure a round-shank nail or screwdriver horizontally in a vice.
- Position the blade’s centre hole over the shaft.
- If either end rotates downwards, remove a small amount of metal from the heavier end.
- Repeat until the blade remains level. See Fig. 18.

6. Refit the blade and tighten the retaining nut to 20–25 N·m. Refer to Replacing the Blade.

**WARNING: An unbalanced blade causes excessive vibration at high speed. It may damage the lawn mower or break, causing serious injury.**

# Lubrication

**WARNING: Remove both battery packs before lubricating the lawn mower.**

Lubrication must be performed by a qualified service technician or authorised service centre.

# Storage

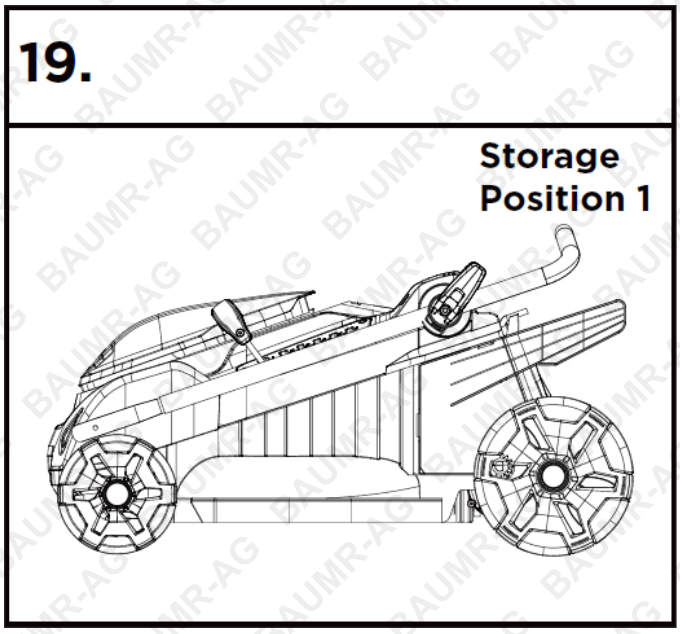


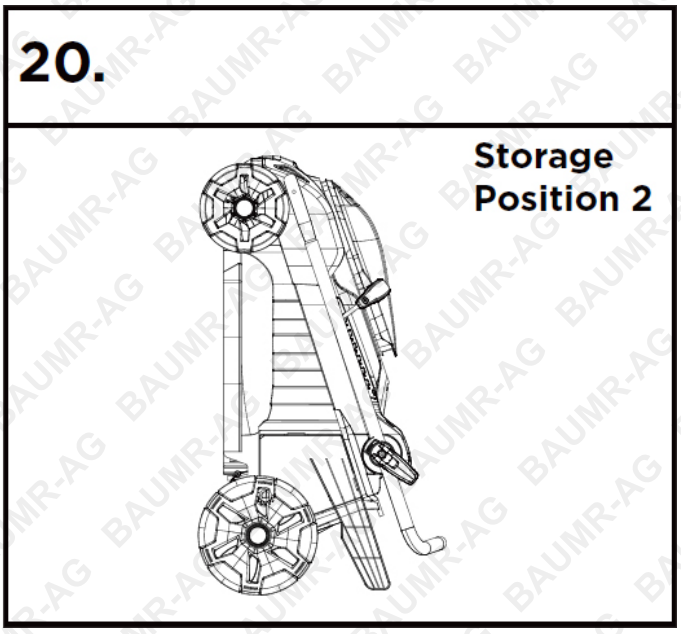


Prepare the lawn mower for storage as follows:

1. Remove both battery packs.
2. Remove the grass catcher.
3. Set the cutting height adjustment lever to the lowest position.
4. Clean the lawn mower using a damp cloth or soft hand brush.
5. Inspect the lawn mower for worn, loose or damaged parts. Check all fasteners and tighten them if necessary. Inspect the blade and sharpen or replace it if worn or damaged.
6. Store the lawn mower indoors in a clean, dry and cool area, out of the reach of children. Keep it away from corrosive materials such as fertiliser and rock salt.
7. Do not cover the lawn mower with an airtight plastic sheet. Plastic coverings may trap moisture and damage the lawn mower.
8. For compact storage, loosen the upper-handle fasteners and fold down the upper handle. Then lower the lower handle completely. Take care not to pinch or damage the electrical cable. See Figs. 19 and 20.

# Troubleshooting

**WARNING: Switch off the lawn mower, remove both battery packs and wait for the blade to stop completely before troubleshooting.**

The following table lists checks and corrective actions for common operating problems. If the problem continues, contact the manufacturer or an authorised service centre.

| Problem | Possible cause | Solution |
|---|---|---|
| **Lawn mower does not start.** | One or both battery packs are discharged. | Charge both battery packs. |
| | One or both battery packs are not correctly installed. | Ensure both battery packs are fully inserted and securely locked in place. |
| | The battery packs or lawn mower circuitry are too hot. | Allow the battery packs and lawn mower to cool until the temperature is below 67 °C. |
| | The mower deck is clogged with grass or debris. | Remove both battery packs, then clean the mower deck. Ensure the blade can move freely. |
| | Other fault. | Contact the manufacturer or an authorised service centre. |
| **Lawn mower cuts unevenly.** | The blade is blunt. | Sharpen or replace the blade. |
| | The cutting height is unsuitable. | Adjust the cutting height to a higher setting. |
| | The blade is incorrectly fitted. | Refit the blade correctly. Refer to Replacing the Blade. |
| **Lawn mower stops while mowing.** | The lawn mower is overloaded. | Increase the cutting height or reduce your walking speed. |
| | The mower deck is clogged with grass or debris. | Remove both battery packs, then clear the mower deck and remove any obstructions. |
| | The battery packs or lawn mower circuitry are too hot. | Allow the battery packs and lawn mower to cool until the temperature is below 67 °C. |
| **Excessive vibration occurs.** | The blade is loose. | Tighten the blade retaining nut to 20–25 N·m. |
| | The blade is unbalanced. | Balance the blade as described in Sharpening the Blade. |
| | The blade is bent or damaged. | Replace the blade. |
| **The motor operates, but the blade does not cut the grass.** | The blade retaining nut is not tightened to the specified torque. | Tighten the blade retaining nut to 20–25 N·m. |
| **Operating time is short with fully charged battery packs.** | Long or thick grass and a low cutting height are increasing the load. | Increase the cutting height and reduce your walking speed. Battery operating time is rated under light-load conditions. |


© Baumr-AG

# Specifications

| | |
|---|---|
| **Power Type** | Battery |
| **Power (Watts)** | 750 W |
| **Motor Type** | Brushless |
| **Battery Type** | Lithium-ion SYNC |
| **Battery Capacity** | 4.0Ah |
| **Battery Voltage** | 40V |
| **Charge Time** | 2 Hours |
| **Cutting Width** | 17" |
| **Deck Material** | Polypropylene |
| **Height Adjustment** | 25–75mm, 6-position |
| **Height Adjustment System** | Central |
| **Grass Catcher Volume** | 50 L |


© Baumr-AG

**Some experts believe that the incorrect or prolonged use of almost any product may cause serious injury or death. To help reduce your risk of serious injury or death, refer to the information below. For more information, see www.datastreamserver.com/safety**

- Consult all documentation, packaging, and product labelling before use. Note that some products feature documentation available online. It is recommended to print and retain the documentation.
- Before each use, check the product for loose/broken/damaged/missing parts, wear, or leaks (if applicable). Never use a product with loose/broken/damaged/missing parts, wear, or leaks.
- Products must be inspected and serviced (if applicable) by a qualified technician every 6 months. This is based on average residential use by persons of average size and strength, and on a property of average metropolitan size. Use beyond these recommendations may require more frequent inspections/servicing.
- Ensure that all users of the product have completed a suitable industry recognised training course before being allowed access to the product.
- The product has been supplied by a general merchandise retailer that may not be familiar with your specific application or description of application. Be sure to attain third-party approval from a qualified specialist for your application before use, regardless of any assurances from the retailer or its representatives.
- This product is not intended for use where fail-safe operation is required. As with any product (for example, automobile, computer, toaster), there is the possibility of technical issues that may require the repair or replacement of parts, or the product itself. If the possibility of such failure and the associated time it may take to rectify could in any way inconvenience the user, business, or employee, or financially affect the user, business, or employee, then the product is not suitable for your requirements. This product is not intended for use where incorrect operation or a failure of any kind, including but not limited to, a condition requiring product return, replacement, parts replacement, or service by a technician may cause financial loss, loss of employee time or an inconvenience requiring compensation.
- If this product has been purchased in error when considering the information presented here, contact the retailer directly for details of their returns policy, if required.

edisons.com.au

© Baumr-AG. All rights reserved. No part of this document, including descriptive content, concepts, ideas, diagrams, or images may be reproduced or transmitted in any form or by any means, electronic or mechanical, including photocopying, scanning, or recording, or any information storage and retrieval system, without express permission or consent from the publisher.