5inch DSI Display User Manual

1. Overview

- 800x480 resolution display, IPS full view
- Raspberry Pi **MIPI DSI** interface direct output, plug and play, no need to install driver
- Support official system **Raspbian**, 2 points for zoom the page
- Support **Ubuntu/Kali/Win10 IoT**, single touch
- Support **Retropie**
- Backlight adjustment through KEY, IIC command and PWM, adapt to different use environment

2. Parameter

Name	Descriptions
LCD Size	5 inch
LCD Type	IPS TFT
LCD Resolution	800*480
LCD Interface type	RGB888, 16.7 M true color
Module Interface Type	Raspberry Pi MIPI DSI
Refresh Rate	60Hz
Touch screen type	Capacitive touch screen
Viewing Angle	IPS：178°
Active Area	108.00x64.80(mm)
Working Voltage	3.3V
Maximum Operating Current	340mA
Operating Temperature	-20℃-70℃
Module Size	121.1x77.9(mm)
Package Size	154*143*38(mm)
Module Weight (net weight)	112 g
Package Weight	180g

3. Product Size

Front view

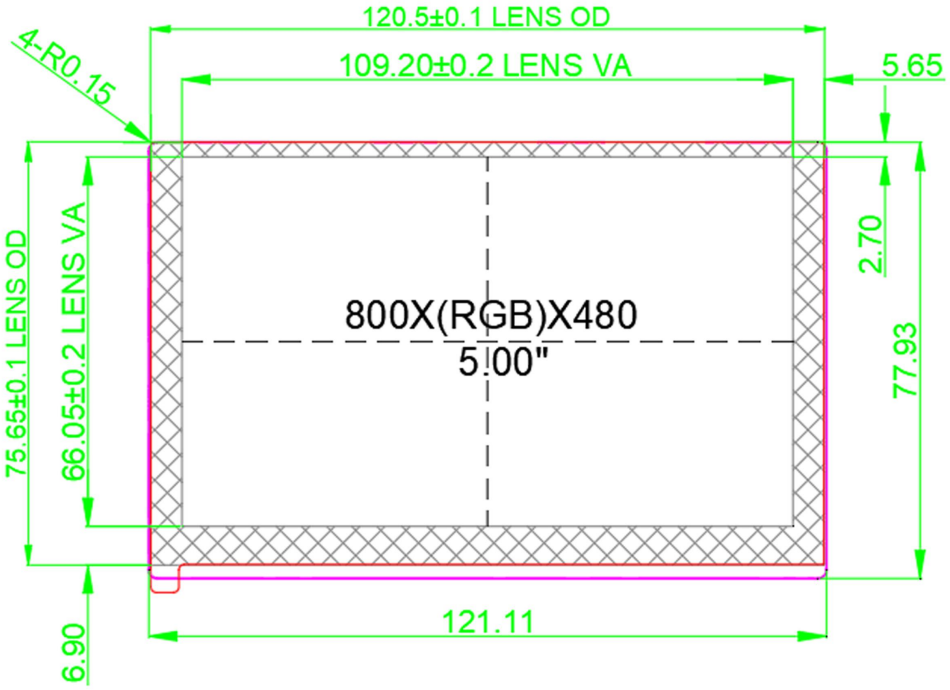

Rear view

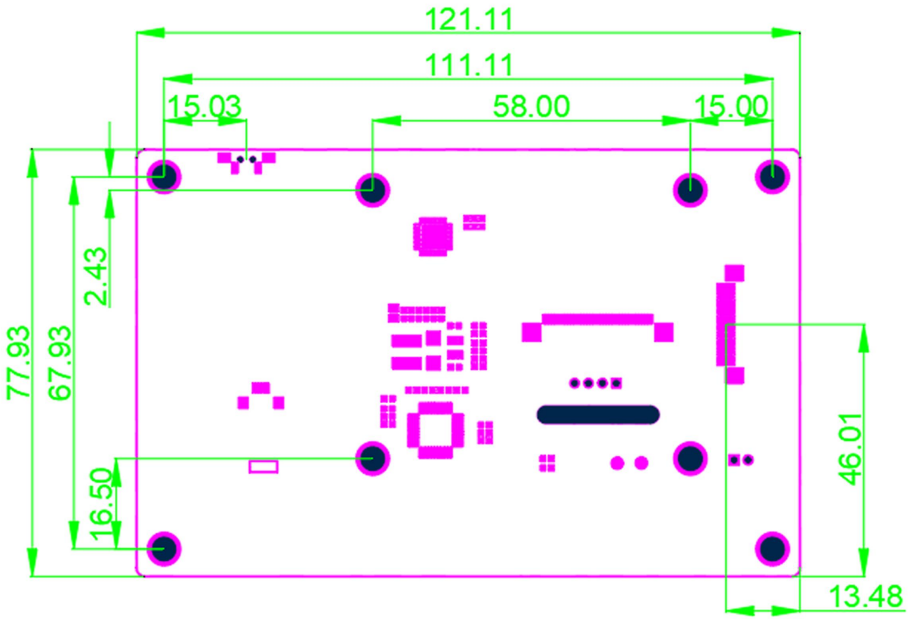

Side view

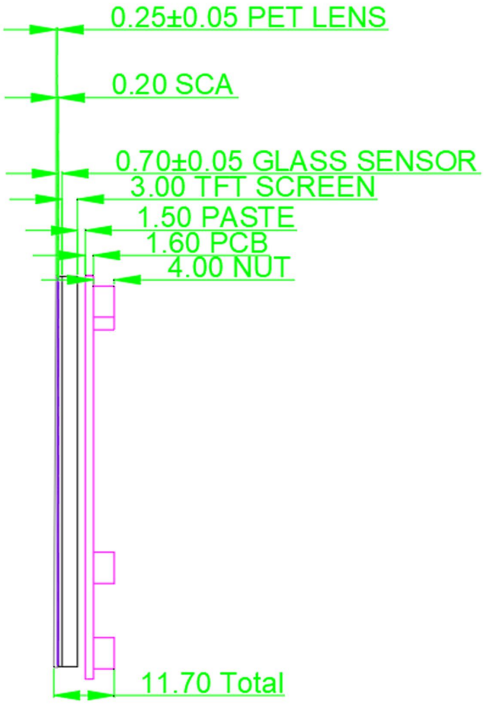

4. Packing list



Packing list:

① 5 inch display screen x1

② FFC-1.0-15P-10cm (Reverse) ×1

③ FFC-1.0-15P-5cm (Reverse) ×1

④ Screw (M2.5x4) x4

⑤ Copper Cylinder (M2.5x4+4) x4

⑥ Screw (M2.5x12) x2

⑦ Bracket x2

5. Hardware Description

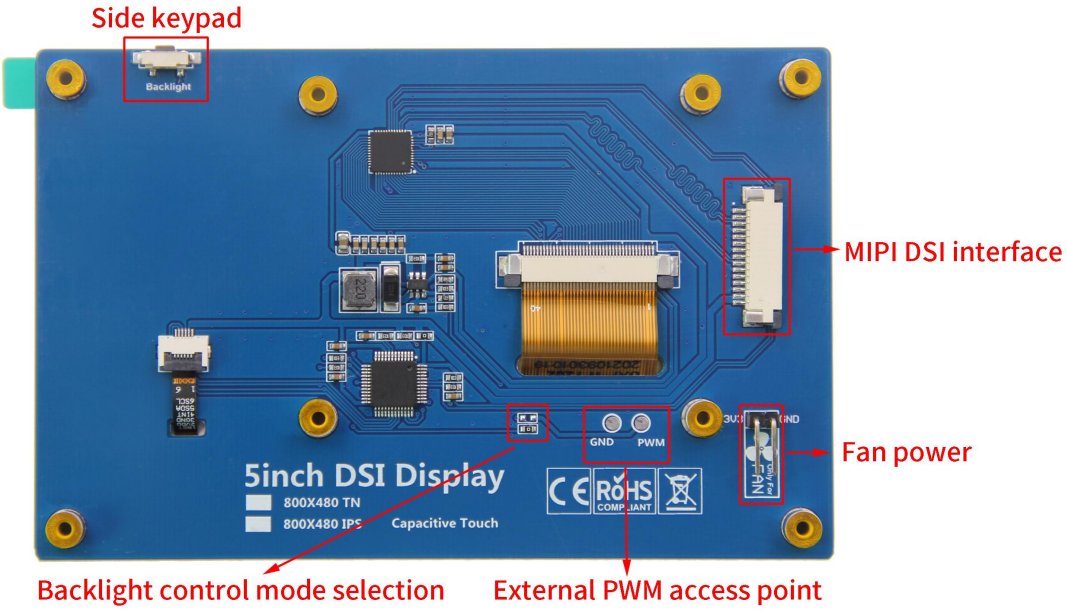

1）Side keypad

For brightness adjustment, click to increase by 10%, then return to 10% after reaching 100%; Long press to turn off the backlight and press again to restore the original brightness.

2）MIPI DSI interface

MIPI DSI interface for connecting Raspberry Pi via FPC flexible cable, Specification for 15PIN 1.0mm, the pin definition as shown below.

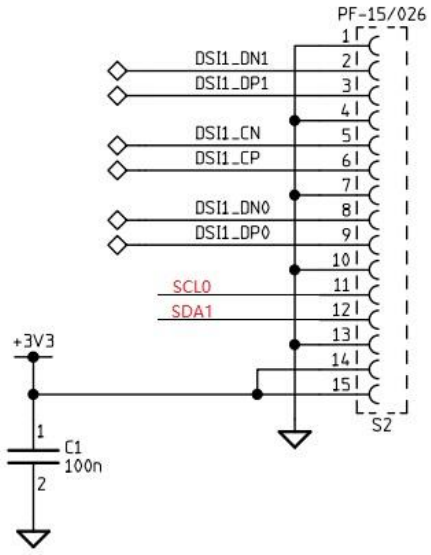

3）Backlight control mode selection

The circuit is used to choose the mode of fixed maximum brightness value or the mode of adjusting brightness value through PWM:

- The OR resistor is soldered to lower pad, then the backlight value is fixed to control by KEY;
- The OR resistor is soldered to upper pad, then the backlight value is fixed to control by PWM.

Note: The default option is set to control backlight value by KEY

4） External PWM access point

Used for external PWM control signal input, you can control the backlight value through the PWM signal. Where the PWM point is connected to the GPIO (such as GPIO18) that outputs the PWM signal, and the GND point is connected to the GND pin.

5） Fan power interface:

3.3V small fan can be connected.

6. How to use

The module can be driven directly using the official original image without any modifications.

Here are the steps to use the module on Raspberry Pi:

1) Download the latest system image from the official website of Raspberry Pi to the PC, and then extract the file to get **.img** file;
(https://www.raspberrypi.org/downloads/)

2) Prepare a Micro SD card (at least 8GB), insert it into PC with the card reader, open **SDFormatter** software, select the target SD card, and then click the Format button to Format the SD card;

3) After the formatting is completed, open Win32DiskImager software, first select Device (Micro SD card inserted on PC), then select Image File (decompressed.IMG Image File), and finally click Write for burning;

4) Pop out the SD card on the PC and insert it into the SD card slot of Raspberry Pi;

5) Install Raspberry Pi into the display module. First, install 4 copper columns to the positioning column, then use 4 screws (M2.5) to fix the Raspberry Pi to the copper column, then connect the DISPLAY module to the Raspberry Pi Display interface through FPC flexible cable, and finally connect the power cord to the Raspberry Pi;

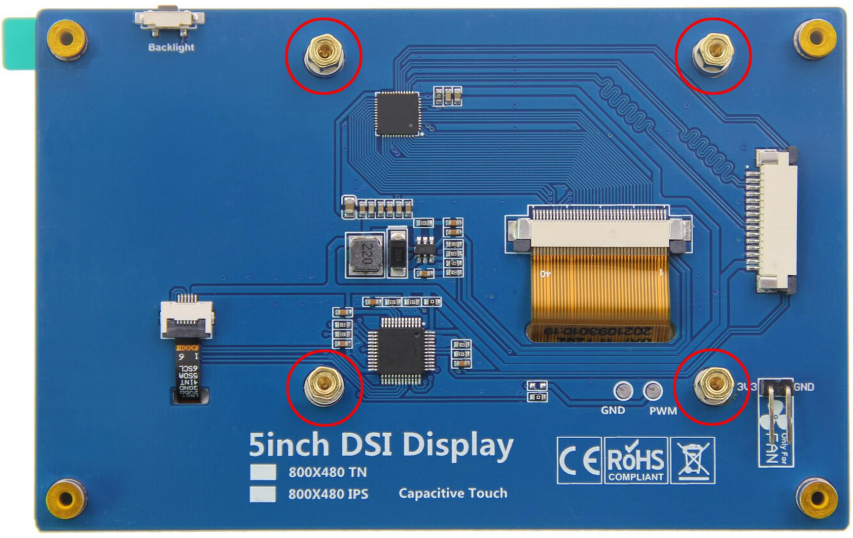

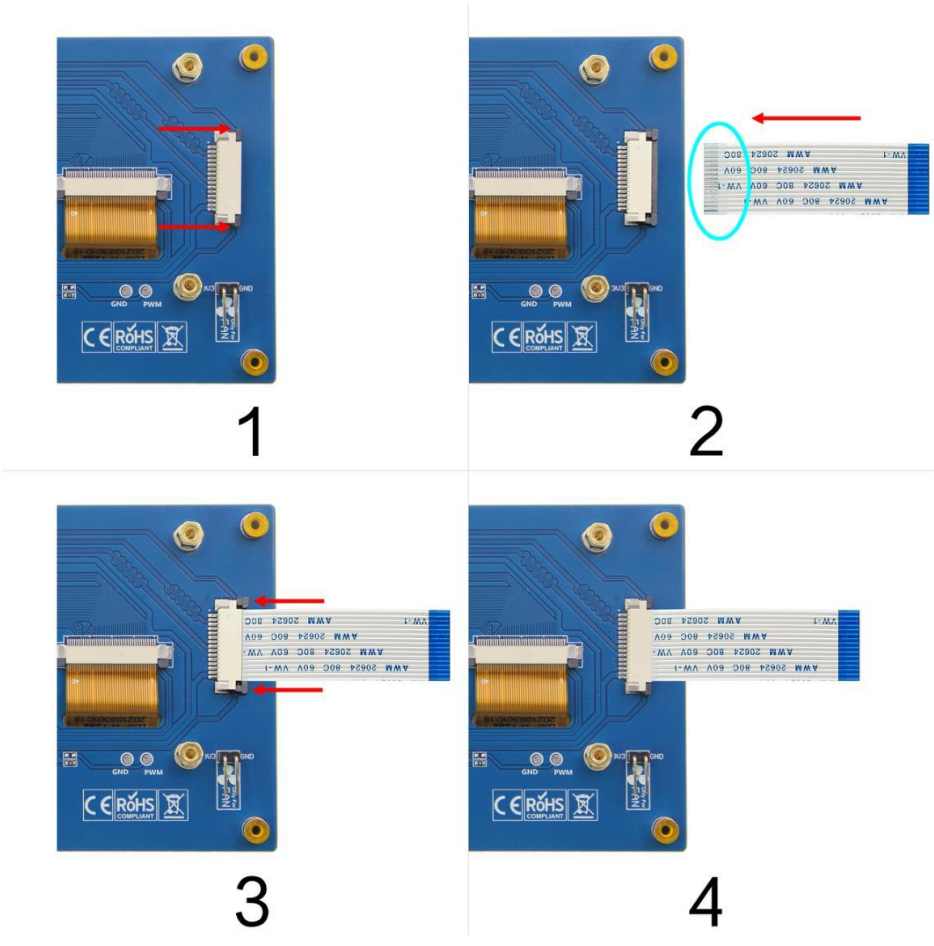

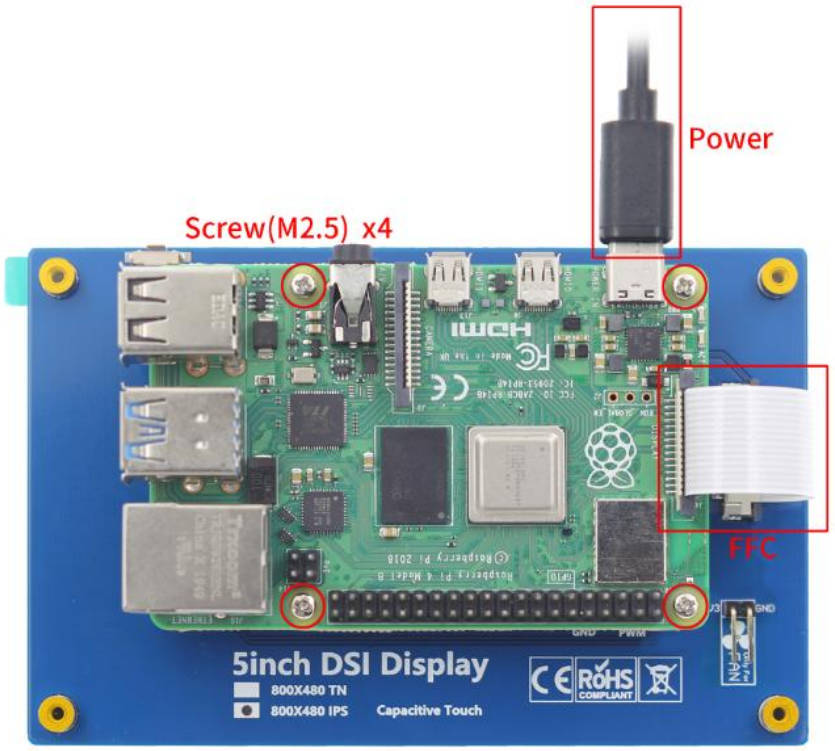

6) Power up the Raspberry Pi, and you can see that the program runs normally. The module has display screen output, and the touch function is normal.

(If the touch function or display is abnormal, Please find the 'dtoverlay=vc4-kms-v3d' in the **/boot/config.txt** file and change it to 'dtoverlay=vc4-fkms-v3d', or comment it out '#dtoverlay=vc4-kms-v3d'.)

Note:

1) The copper column, screws and 15PIN FPC wiring are included in the product accessories.

2) Figure 4 shows the installation of Raspberry Pi 4. The installation method of Raspberry Pi 3 is basically the same as that of Raspberry Pi 4. The only difference is that the power cord connected is different. The Raspberry Pi 4 uses a Type-C cable and the Raspberry Pi 3 uses a Micro USB cable.

7. How to control backlight brightness

Method 1: Adjust by pressing buttons

Click to increase by 10%, then return to 10% after reaching 100%; Long press to turn off the backlight and press again to restore the original brightness.

Method 2: Adjust by entering a command

1. Find the 'dtoverlay=vc4-kms-v3d' in the /boot/config.txt file and comment it out '#dtoverlay=vc4-kms-v3d'.)

```
# Enable DRM VC4 V3D driver
#dtoverlay=vc4-kms-v3d
max_framebuffers=2
```

2. Permission needs to be granted first (only need to run once after each boot):

```
sudo chmod 777 /sys/class/backlight/rpi_backlight/brightness
```

3. Next step:

```
echo X > /sys/class/backlight/rpi_backlight/brightness
```

'X' indicates any number from 0 to 255. 0 indicates the darkest backlight, and 255 indicates the brightest backlight

(In this way, the brightness adjustment will be recorded in the system and will still take effect after the machine is restarted. The PWM mode is not recorded and changes with the signal in real time.)

Method 3: Through PWM regulation

1) Make the hardware connection first. Adjusting mode according to the hardware specifications, backlit by PWM adjust brightness value way, so to backlight control mode selection circuit of resistance welding to the PWM control circuit, the next on the PWM & GND access points respectively welding dubond thread, finally will PWM access points connected to the output PWM signals of Raspberry Pi GPIO (select GPIO18), connect GND access points to Raspberry Pi GND pin.

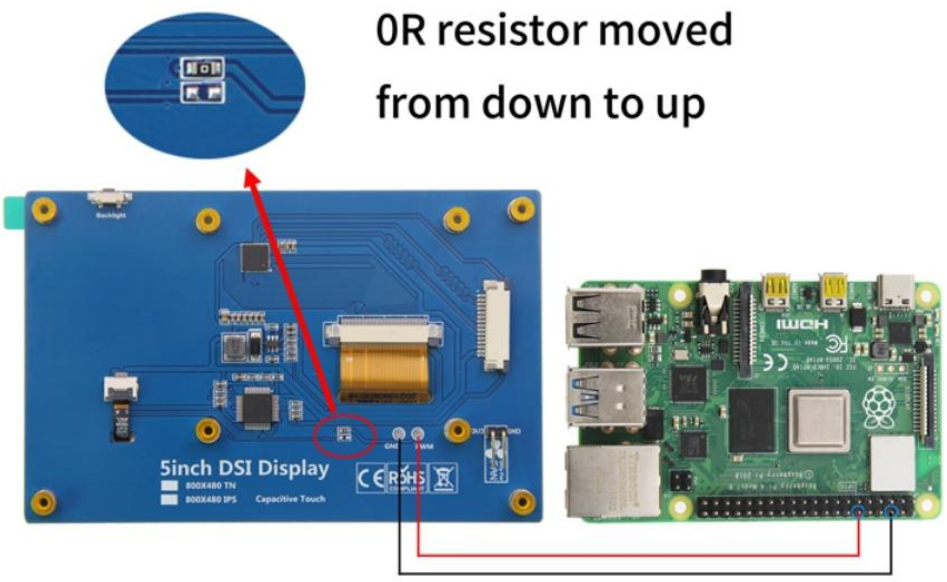

2) Software adjustment. The first step (which you can ignore if you have already done it) is to connect the SD with the official image to your PC, then create a new SSH file in the root directory of the SD card, pop the SD card out, and insert it into the Raspberry Pi. The above steps are to prepare for an SSH connection. Next, open the PC terminal software (such as PuTTY, Securecrt, etc.), select the SSH protocol, enter the Raspberry Pi IP address and log in the Raspberry Pi terminal (the IP address can be viewed through the router's web page or viewed on the Raspberry Pi through the module).

3) On the Raspberry Pi terminal, enter the following command to adjust the PWM backlight brightness (select GPIO18 here, and other idle GPIO can also be selected) :

```
gpio -g pwm 18 1024
gpio -g mode 18 pwm
gpio pwmc 1000
gpio -g pwm 18 X （Control the brightness, X value between 0 and 1024）
```

In addition, add the following content at the end of **/boot/config.txt** file to make the display module boot, PWM will reach the maximum (the brightness of the display screen)

```
gpio=18=op,pu
```

Note:

Backlight control on Raspberry Pi 4 will fail, you need to update the WiringPi GPIO library by typing the following command (Raspberry Pi requires Internet connection)

```
cd /tmp
wget https://project-downloads.drogon.net/wiringpi-latest.deb
sudo dpkg -i -B wiringpi-latest.deb
```

8. Display direction rotation

There are two kinds of display direction rotation: FKMS mode direction rotation and traditional graphics mode direction rotation.

Method 1: FKMS mode direction rotation

FKMS mode is used by default on Raspberry Pi 4B.When using this mode, make sure that **"dtoverlay =vc4-fkms-v3d"** under pi4 in **/boot/config.txt** file is not commented out. In this mode, the display direction can only be rotated by menu options. Note that when setting the display direction in the menu, it is recommended to use the mouse for operation.

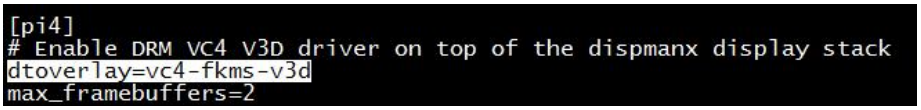

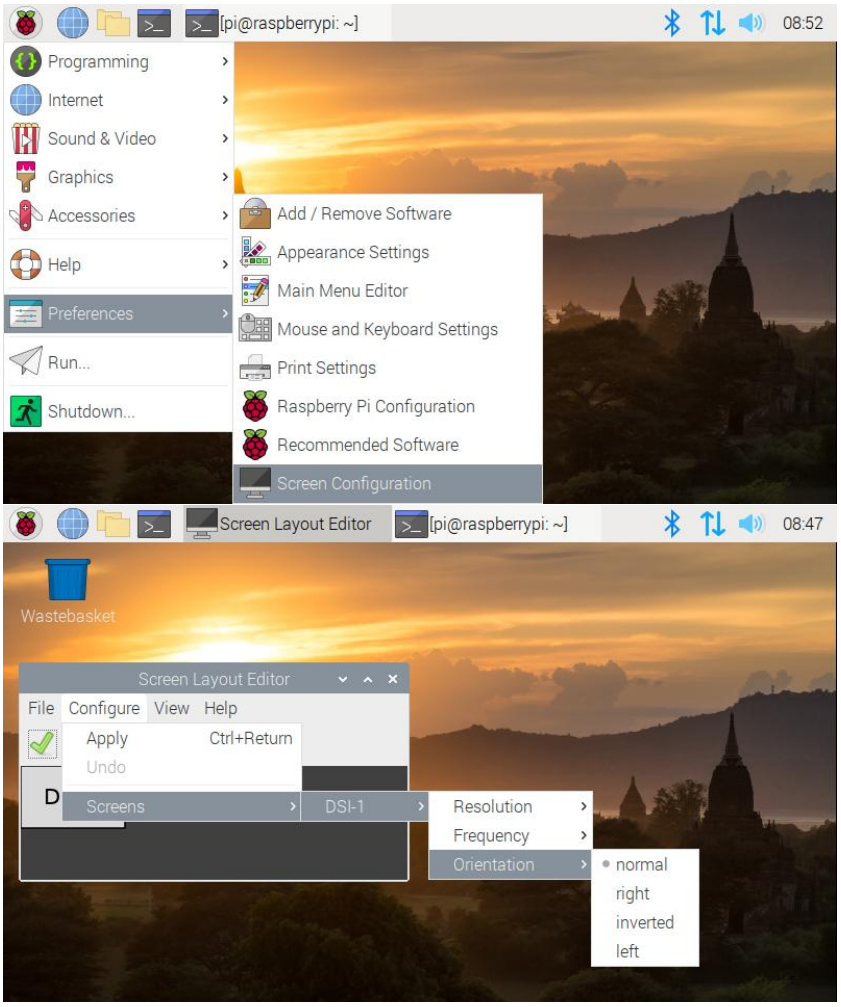

Method 2: Traditional graphics mode

By default, the Raspberry Pi 3, 2, and 1 series use traditional graphics mode. Raspberry Pi 4B can also use traditional graphics mode, just in /boot/config.txt file under the Pi 4:

```
dtoverlay=vc4-fkms-v3d
```

Comment out, as shown (Traditional graphics mode is generally not recommended on Raspberry Pi 4B). In traditional graphics mode, this can be done by adding it at the end of the /boot/config.txt file:

```
display_lcd_rotate=x（x=0,1,2,3,0x10000,0x20000）
```

To set the display orientation, reboot is required to take effect .

```
[pi4]
# Enable DRM VC4 V3D driver on top of the dispmanx display stack
#dtoverlay=vc4-fkms-v3d
max_framebuffers=2
```

```
[all]
#dtoverlay=vc4-fkms-v3d
display_lcd_rotate=0
```

display_lcd_rotate=0, The default normal display direction (no rotation);

display_lcd_rotate=1, Rotate 90° clockwise;

display_lcd_rotate=2, Rotate 180° clockwise;

display_lcd_rotate=3, Rotate 270° clockwise;

display_lcd_rotate=0x10000, Flip horizontal;

display_lcd_rotate=0x20000, Flip vertical;

Note: There is a more convenient way to rotate display and touch at the same time by rotating 180° clockwise.

Please find the ‘dtoverlay=vc4-kms-v3d’ in the /boot/config.txt file and comment it out ‘#dtoverlay=vc4-ms-v3d’, and add the following statement at the end of the file

display_rotate=2

lcd_rotate=2

```
# Additional overlays and parameters are documented /boot/overlays/README

# Enable audio (loads snd_bcm2835)
dtparam=audio=on

[pi4]
# Enable DRM VC4 V3D driver on top of the dispmanx display stack
#dtoverlay=vc4-fkms-v3d
max_framebuffers=2

[all]
#dtoverlay=vc4-fkms-v3d
hdmi_force_hotplug=1


display_rotate=2
lcd_rotate=2
```

After saving and restart, display and touch can be used normally (only rotate 180°,

other directions are not applicable)

9. Touch direction rotation

The display direction is set, and the touch direction should be set accordingly. It needs to correspond with the display direction, otherwise the touch operation is not accurate. Touch direction setting need to be in the **/usr/share/X11/xorg.conf.d/40-libinput.conf** file add **'<Option" CalibrationMatrix " "XXX"** > content, including XXX for touch direction set parameters, the following will show.

Open the **40-libinput.conf** file:

```
sudo nano /usr/share/X11/xorg.conf.d/40-libinput.conf
```

```
Section "InputClass"
        Identifier "libinput touchscreen catchall"
        MatchIsTouchscreen "on"
        Option "CalibrationMatrix" "1 0 0 0 1 0 0 0 1"
        MatchDevicePath "/dev/input/event*"
        Driver "libinput"
EndSection
```

After the modification, press **Ctrl** +**X**, **Y**, and **Enter** to save and exit.

Corresponding relation table of display direction and touch direction:

Display Rotation	FKMS mode	Traditional graphics mode Settings	Touch orientation setting
no rotation	normal	display_lcd_rotate=0	Option "CalibrationMatrix" "1 0 0 0 1 0 0 0 1"
Rotate 90° clockwise	right	display_lcd_rotate=1	Option "CalibrationMatrix" "0 1 0 -1 0 1 0 0 1"
Rotate 180° clockwise	inverted	display_lcd_rotate=2	Option "CalibrationMatrix" "-1 0 1 0 -1 1 0 0 1"
Rotate 270° clockwise	left	display_lcd_rotate=3	Option "CalibrationMatrix" "0 -1 1 1 0 0 0 0 1"
Flip horizontal	NO	display_lcd_rotate=0x10000	Option "CalibrationMatrix" "-1 0 1 0 1 0 0 0 1"
Flip vertical	NO	display_lcd_rotate=0x20000	Option "CalibrationMatrix" "1 0 0 0 -1 1 0 0 1"

10. How to install the virtual keyboard

Execute the following command:

```
sudo apt-get install matchbox-keyboard
```