ativafit®

www.ativafit.com

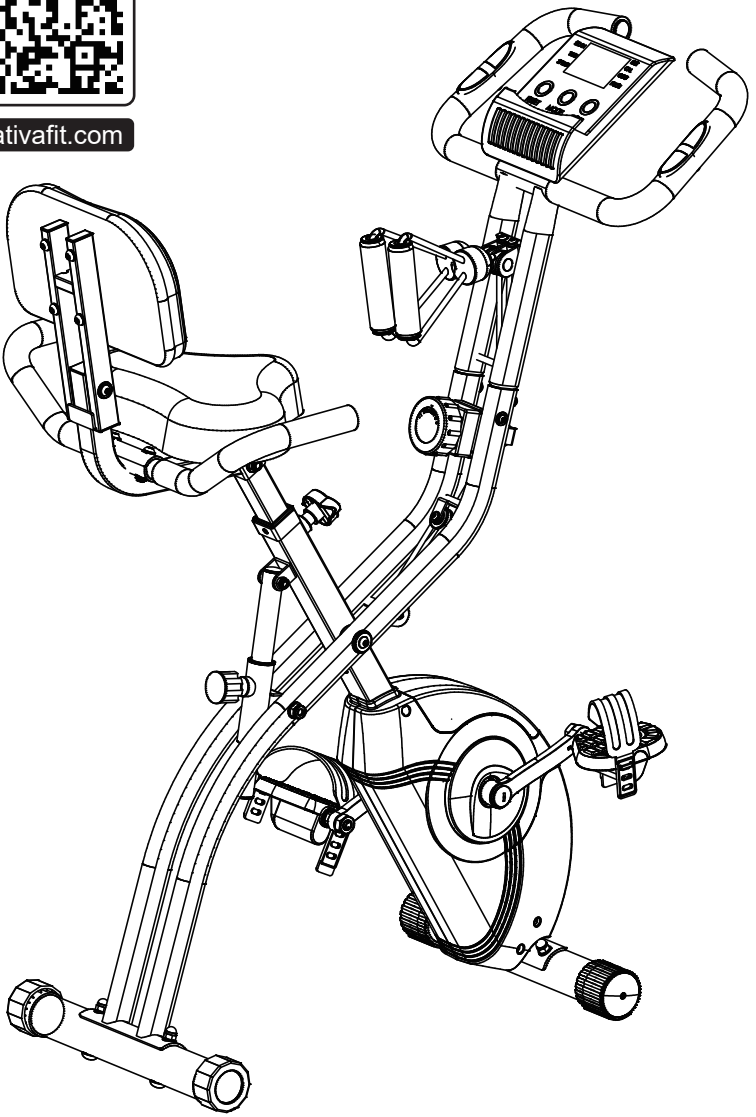


EN : 01-17 DE : 18-34 FR : 35-51
ES : 52-68 IT : 69-85 JP: 86-102

ativafit®

ativafit®

## Important

These instructions contain important information which will help you get the best from your equipment and ensure safe and correct assembly, use and maintenance.

If you need help or have damaged or missing parts, send message to our email:

support@ativafit.com

Supplier/Factory Name: NANTONG LINYANG TIYU YONGPIN YOUXIAN GONGSI
Address: ZHEN WU LU 21 HAO RUGAO DING YAN ZHEN JIANGSU 226521 CN

UK REP

Business name: GSG CONSULTING GROUP LIMITED
Business address: Unit 3 Matthew street Gorton Manchester
Email: GSG--GROUP@outlook.com
Tel: 07927 638013

ativafit®

# ⚠ WARNING

## Important - Please read fully before assembly or using.

**"WARNING — This stationary training equipment is not suitable for high accuracy purposes."**
**if any of the adjustment devices are left projecting, they could interfere with the user's movement.**
**To reduce the risk of serious injury, read the entire manual before you assemble or operate the Ativafit Folding Magnetic Exercise Cycle. In particular, note the following safety precautions:**

**Supplier/Factory Name: OMNI SPORTS TREND & TECHNOLOGY LIMITED**
**Address: 12/F, Chinachem Johnston Plaza, 178-186 Johnston Road, Wanchai, Hong Kong**
**Office Phone: 852 2180 2922**
**Email: support@ativafit.com**

### Assembly

- **Check you have all the components and tools listed on pages 3 and 4, bearing in mind that, for ease of assembly, some components are preassembled.**
- **Keep children and animals away from the work area, small parts could choke if swallowed.**
- **Make sure you have enough space to layout the parts before starting.**
  **Assemble the item as close to its final position (in the same room) as possible.**
- **Position the equipment on a clear/level surface.**
- **Dispose of all packaging carefully and responsibly.**

### Using

- **It is the responsibility of the owner to ensure that all users of this product are properly informed as to how to use this product safely.**
- **This product is intended for domestic use only. Do not use in any commercial, rental, or institutional setting.**
- **Before using the equipment, always warm up properly.**
- **If the user experiences dizziness, nausea, chest pain, or other abnormal symptoms stop the workout and seek immediate medical attention.**
- **Only one person at a time should use the equipment.**
- **Keep hands away from all moving parts.**
- **Always wear appropriate workout clothing when exercising. Do not wear loose or baggy clothing, since it may get caught in the equipment. Wear athletic shoes to protect your feet while exercising.**
- **Do not place any sharp objects around the equipment.**
- **Disabled persons should not use the equipment without a qualified person or doctor in attendance.**
- **Keep unsupervised children away from the equipment.**
- **Injuries to health may result from incorrect or excessive training. The equipment shall be installed on a stable base and properly leveled.**
- **This product conforms to: BS EN ISO 20957-1 and EN957-5 Class (H) - Home Use - Class (C).**

### Battery safety

- **Warning: Incorrect installation of batteries may cause battery leakage and corrosion, resulting in damage to the computer.**
  **Do not mix old and new batteries, or batteries of different types.**
  **Do not dispose of batteries in a fire.**
  **Do not dispose of batteries with normal household waste, take to a local recycling centre.**



⚠ **Warning: Before beginning any exercise program, consult your doctor. This is especially important for persons over the age of 35 or persons with pre-existing health problems.**
**You MUST read all instructions before using any fitness equipment. Ativafit assumes no responsibility for personal injury or property damage sustained by or through the use of this product.**
**The pedal crank training equipment is not suitable for the raputic purposes. Heart rate monitoring systems may be inaccurate. Over exercise may result in serious injury or death. If you feel faint stop exercising immediately.**

ativafit®

# Parts List

## Please check you have all the parts listed below

Note: Some of the smaller components may be pre-fitted to larger components. Please check carefully before contacting Ativafit regarding any missing components.
Total mass of the product is 17.5 kg / 38.6 lb. Foot print of the product is 82 x 49 cm / 32.3 x 19.3 inch.

| | | | |
|---|---|---|---|
| 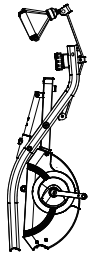 | 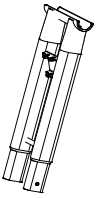 | 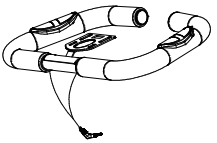 | 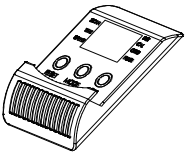 |
| 1. Main frame | 2. Handlebar frame | 3. Handlebar | 4. Monitor |
| 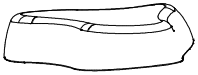 |  | 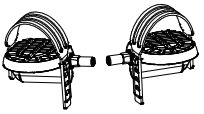 |  |
| 5. Seat cushion | 6. Seat post | 7. Pedals | 8. Front foot tube |
|  | 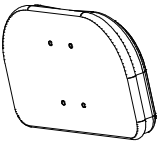 | 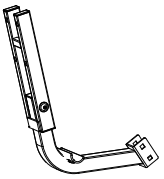 | 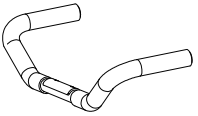 |
| 9. Rear foot tube | 10. Back cushion | 11. Back frame | 12. Elbow |
| 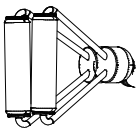 | 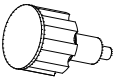 20. M16 Ball pin 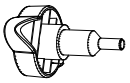 | 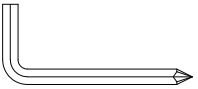 | 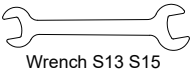 Wrench S13 S15 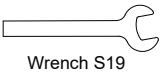 Wrench S19 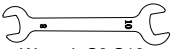 Wrench S8 S10 |
| 29. Elastic ropes | 21. M16 Pin | Wrench (L5) | |

# Assembly Instructions

1. NOTICE
A. Please make sure there has enough space around the machine before assembly.
B. Please use the provided tools or right tools by yourself.
C. Check the parts and the hardware first.

## Step 1

Take the product out of the carton, then check all accessories according to the parts list.
Take out the mainframe from the carton as shown in the following figure.

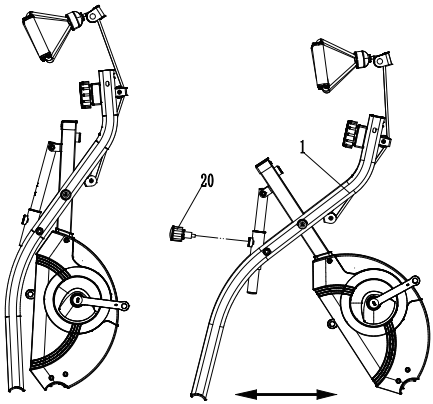


## Step 2

Please use the four key head bolts A (23), four curved washers (16) and four cap nuts (22) when you connect the rear foot tube (9) and the front foot tube (8) to the main frame (1).

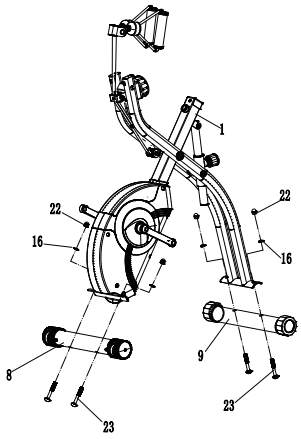

## Step 3

Please use three flat washers (18) and three M8 nuts (19) when you install the seat cushion (5) to the seat frame (6).
Please use the star adjustment knob (21) when you fix the seat frame (6) to the main frame (1).

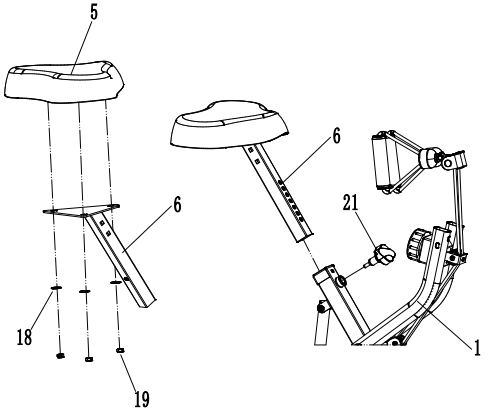


## Step 4

Please use Back frame (11) with two key head bolts B (17) and two flat washers (18) when you secure the seat frame (6). Then tighten with the M8 nuts (19).
Please use two screws B (15) and two curved washers (16) when you attach the elbow (12) to the back frame (11).

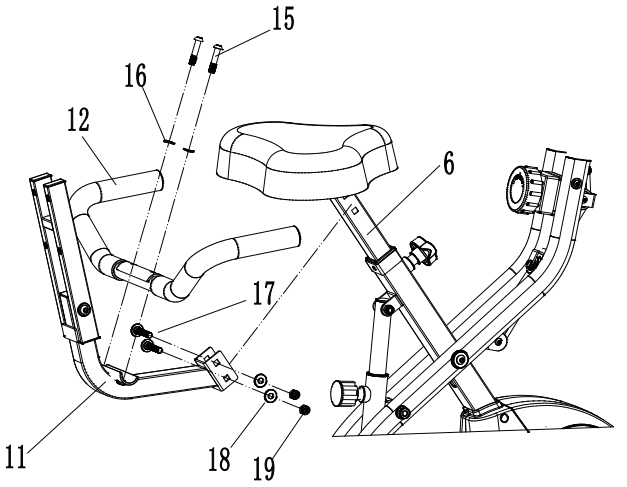

## Step 5

Please use the four screws A (13) and four washers (14) when you secure the back cushion (10) to the back frame (11).

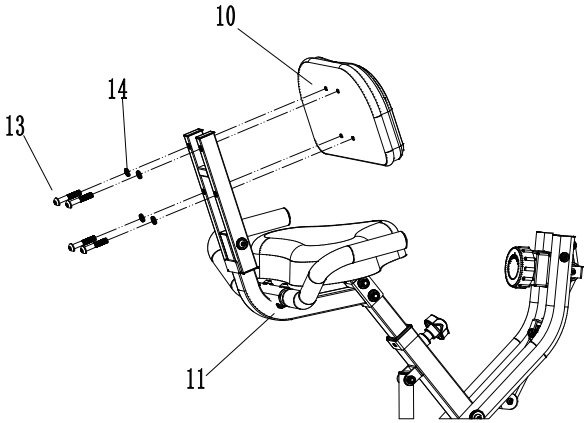


## Step 6

Please use four screws C (26), two flat washers (27) and two curved washers (28) when you secure the handlebar frame (2) to the rear mainframe (1).
Please use screws D (24) and M6 nuts when you fix the handle connector to the handlebar frame (2).

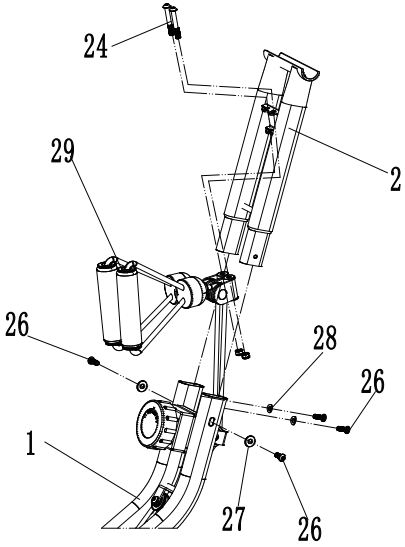

## Step 7

Please use two screws A (30), two spring washers (14) and two curved washers (16) when you secure the handlebar (3) to the handlebar frame (2).

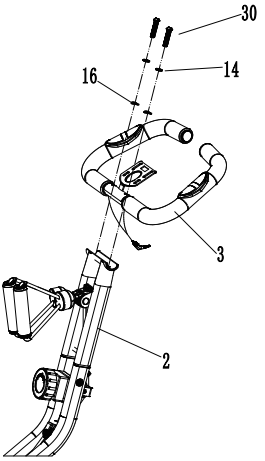


## Step 8

Assemble the monitor (4) to the handlebar (3) with two screws (31), then connect it to the monitor sensor line and the connector on the monitor, finally insert the sensitive sensor wire into the heart rate jack on the back of the monitor.
Connect the pedal to the appropriate crank arm with a wrench.
The right crank arm is on the right side of the cycle when you are sitting. Turn the right pedal clockwise.
**Please attention that the left pedal is counterclockwise.**

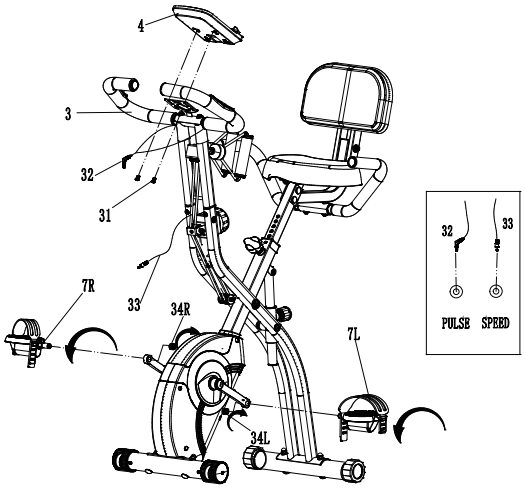

## Step 9

The way to switch between imperial and metric units:
First please set the monitor to “Speed” or “Distance”, then long press the button “Mode” until you hear two long beeps then let go.

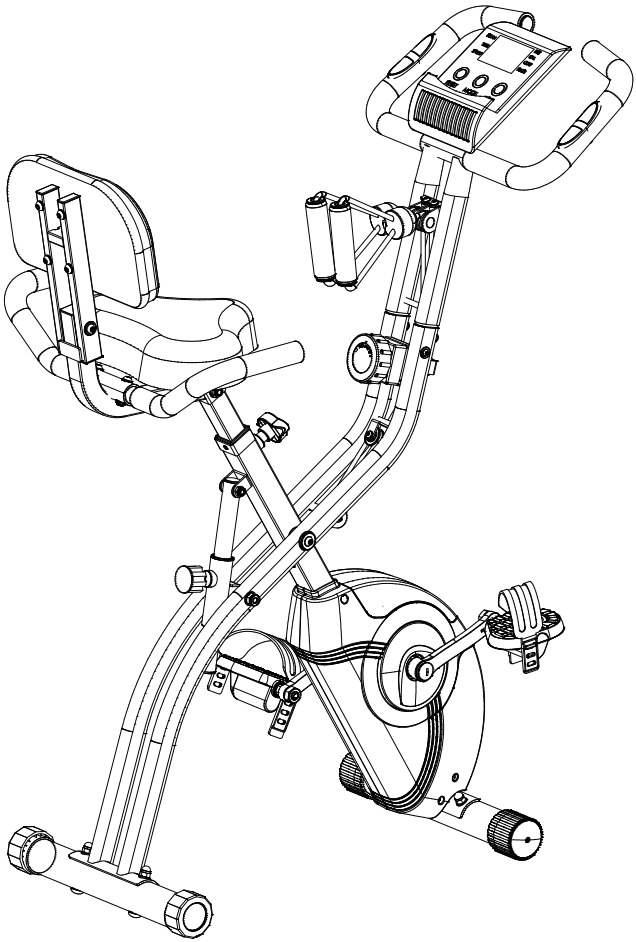

Make sure all the screws are tightened again.

ativafit®

# Monitor operation

## Functions and operations

### Meter display item

| | | |
|---|---|---|
| Function | TIMER (TIME) | 00:00-99.59min |
| | SPEED (SPEED) | 0:0-999.9km/h (mph) |
| | DISTANCE (DIST) | 0:00-999.9km (mile) |
| | CALORIE (CAL) | 0:00-999.9cal |
| | CUMULATIVE DISTANCE (ODO) | 0:00-9999km (mile) |
| | HEART RATE (PULSE) | 40-240BPM |

## Function Buttons

- **MODE**
  You can press the Mode key to select the function which you want to use and view each function in turn.
- **RESET**
  When the corresponding function is selected by pressing the reset key, the function data will be cleared.

## Usage Explanation

- **Switch on and off**
  Press any key to active the meter. The meter will automatically shut down after four consecutive minutes of inactivity.
- **Clear Data**
  Press and hold the reset key for 3 seconds to clear all function data except total distance.

## Function Selection

- When the function indicator on the display flashes, the meter is in auto scan mode.
  At this time, if you press the mode key again, the meter will be in lock mode.

## Display items and settings

- **Timer (TIME)**
  Exercise time is displayed by pressing the Mode key until the timer (TIME) is up.
- **Speed (SPEED)**
  Current speed is displayed by pressing the Mode key until Speed (SPEED) is displayed.
- **Distance (DIST)**
  The distances for each workout are displayed until you press the Mode key to display the Distance (DIST).

- **Calories (CAL)**
  Press the Mode key and select the “CAL” function, the meter will display the calories burned by the exercise.
- **Cumulative Distance (ODO)**
  The accumulated mileage from the start of exercise is displayed until the cumulative distance (ODO) is displayed by pressing the Mode key.
- **Heart Rate (PULSE)**
  If you press the Mode key and use the “PULSE” function, hold the sensor with both hands then the meter will display the normal test heart rate after 30 seconds.

## Scan

- When the arrow on the display flashes, the meter will automatically scan in the following order: Timer → Speed → Distance → Calories → Cumulative distance → Heart rate

## Care and maintenance

1. Examine the equipment periodically in order to detect any damage or wear which may have been produced.
2. The safety level of the equipment can be maintained only if it is examined regularly for damage and wear, e.g. connection points.
3. Lubricate moving parts with light oil periodically to prevent premature wear.
4. Inspect and tighten all parts before using the equipment, replace any defective parts immediately and do not use the equipment again until it is in perfect working order.
5. Replace defective components immediately and/or keep the equipment out of use until repair.
6. Special attention to components most susceptible to wear.
7. The equipment can be cleaned using a damp cloth and mild non-abrasive detergent. Do not use solvents.
8. Do not attempt to repair this equipment yourself. Should you have any difficulty with assembly, operation or use of your exercise product or if you think that you may have parts missing, contact the manufacturer, their approved service agent or send message to our email: support@ativafit.com

## Care and maintenance

For guarantee purposes, please retain your purchase receipt.

### Information for Users on Disposal of old Equipment and Batteries (European Union only)

These symbols indicate that equipment with these symbols should not be disposed of as general household waste. If you want to dispose of the product or battery, please consider the collection systems or facilities for appropriate recycling.
Notice: The sign Pb below the symbol for batteries indicates that this battery contains lead.



ativafit®

# Exercising Information

## Before starting

How you begin your exercise program depends on your physical condition. If you have been inactive for several years, or are severely overweight, you must start slowly and increase your time on the equipment; a few minutes per workout.

Initially, you may be able to exercise only for a few minutes in your target zone, however, your aerobic fitness will improve over the next six to eight weeks. Don't be discouraged if it takes longer. It's important to work at your own pace. Ultimately, you'll be able to exercise continuously for 30 minutes. The better your aerobic fitness, the harder you will have to work to stay in your target zone.

***Please remember these essentials:***

- Have your doctor review your training and diet programs to advise you of a workout routine you should adopt.
- Begin your training program slowly with realistic goals that have been set by you and your doctor.
- Monitor your pulse frequently. Establish your target heart rate based on your age and condition.
- Set up your equipment on a flat even surface at least 3 feet from walls and furniture.

**Exercise intensity**

To maximize the benefits of exercising, it is important to exercise with the proper intensity. The proper intensity level can be found by using your heart rate as a guide. For effective aerobic exercise, your heart rate should be maintained at a level between 65% and 85% of your maximum heart rate as you exercise. This is known as your target zone. You can find your target zone in the table below.

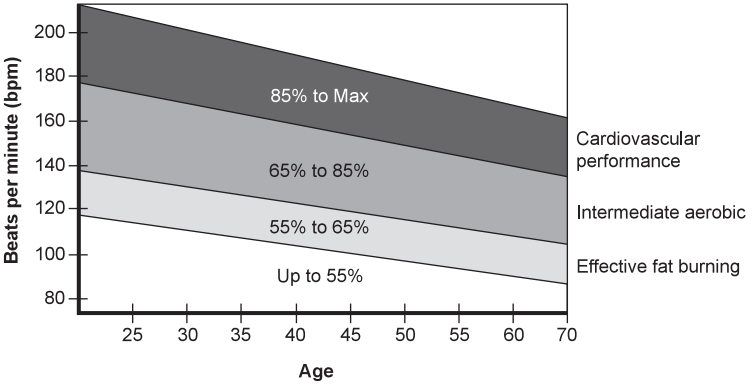


During the first few months of your exercise program, keep your heart rate near the low end of your target zone as you exercise. After a few months, your heart rate can be increased gradually until it is near the middle of your target zone as you exercise.

To measure your heart rate, stop exercising but continue moving your legs or walking around and place two fingers on your wrist. Take a six-second heartbeat count and multiply the results by 10 to find your heart rate. For example, if your six-second heartbeat count is 14, your head rate is 140 beats per minute. (A six-seconds count is used because your heart rate will drop rapidly when you stop exercising.) Adjust the intensity of your exercise until your heart rate is at the proper level.

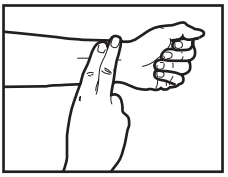

# Exercising Information

## Muscle chart

### Aerobic Exercise

Aerobic exercise improves the fitness of your lungs and heart - your body's most important muscle. Aerobic exercise fitness is promoted by any activity that uses your large muscles (arms, legs, or buttock, for example). Your heart beats quickly and you breathe deeply. An aerobic exercise should be part of your entire exercise routine.

### Weight Training

Along with aerobic exercising which helps get rid of and keep off the excess fat that our bodies can store, weight training is an essential part of the exercise routine process. Weight training helps tone, build and strengthen muscle. If you are working above your target zone, you may want to do a lesser amount of reps. As always, consult your doctor before beginning any exercise program.

### Targeted Muscle Groups

The exercise routine that is performed on the Cycle Trainer will develop the upper and lower body muscle groups. These muscle groups are highlighted on the muscle chart below.

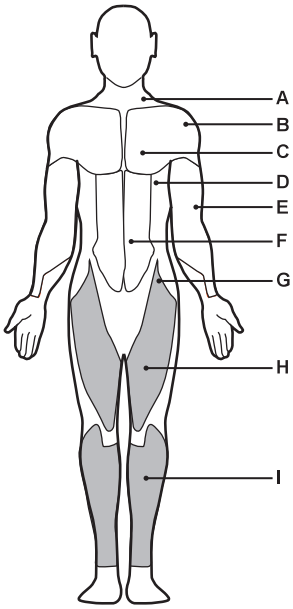


Front

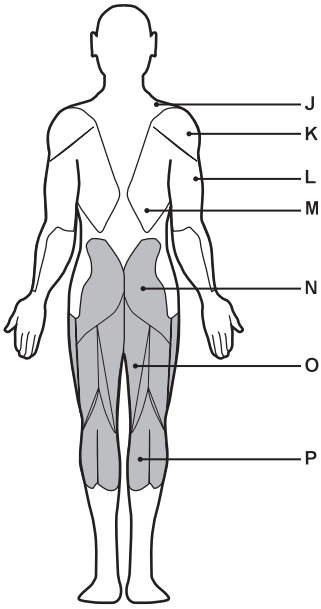


Back

**A:** Trapezius
**B:** Anterior
**C:** Pectoralis Major
**D:** Serratus Anterior
**E:** Biceps
**F:** Abdominal
**G:** Sartorius
**H:** Quadriceps
**I:** Tibialis

**J:** Trapezius
**K:** Posterior
**L:** Triceps
**M:** Latissimus Dorsi
**N:** Gluteals
**O:** Hamstrings
**P:** Gastrocnemius

ativafit®

# Exercising Information

## Warming up and cooling down exercise

***Each workout should include the following three parts:***

**1.** A warm-up, consisting of 5 to 10 minutes of light exercise, such as jogging on the spot, star jumps and lunges. A proper warm-up increases your body temperature, heart rate, and circulation in preparation for exercise.

**2.** Training zone exercise, consisting of 20 to 30 minutes of exercising with your heart rate in your training zone. (***Note***: During the first few weeks of your exercise program, do not keep your heart rate in your training zone for longer than 20 minutes.)

**3.** A cool-down, with 5 to 10 minutes of stretching. This will increase the flexibility of your muscles and will help to prevent post-exercise problems.

**Exercise Frequency**
To maintain or improve your condition, plan three workouts each week, with at least one day of rest between workouts. After a few months of regular exercise, you may complete up to five workouts each week, if desired. Remember, the key to success is make exercise a regular and enjoyable part of your everyday life.

**Suggested Stretches**
See the following basic stretching exercises. Move slowly as you stretch, never bounce.

### Toe touch stretch

Stand with your knees bent slightly and slowly bend forward from your hips. Allow your back and shoulders to relax as you reach down toward your toes as far as possible.

Hold for 15 counts, then relax.

Repeat 3 times.

**Stretches:** Hamstrings, back of knees and back.

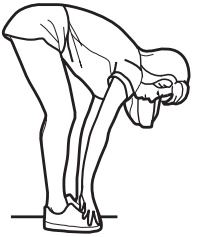

### Hamstring stretch

Sit with one leg extended. Bring the sole of the opposite foot toward you and rest it against the inner thigh of your extended leg. Reach toward your toes as far as possible.

Hold for 15 counts, then relax.

Repeat 3 times for each leg.

**Stretches:** Hamstrings, lower back and groin.



# Exercising Information

## Warming up and cooling down exercise

### Calf/achilles stretch

With one leg in front of the other, reach forward and place your hands against a wall. Keep your back leg straight and your back foot flat on the floor. Bend your front leg, lean forward and move your hips toward the wall.

Hold for 15 counts, then relax.

Repeat 3 times for each leg. To cause further stretching of the achilles tendons, bend your back leg as well.

**Stretches:** Calves, achilles tendons and ankles.

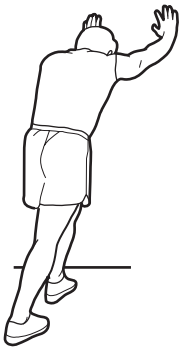

### Quadriceps stretch

With one hand against the wall for balance, reach back and grasp one foot with your other hand. Keeping your bent knee pointing directly downward towards the floor, gentle pull your heel towards your buttock until you feel a gentle stretch in the target area.

Hold for 15 counts, then relax.

Repeat 3 times for each leg.

**Stretches:** Quadriceps and hip muscles.



### Inner thigh stretch

Sit with the soles of your feet together and your knees outward. Pull your feet toward your groin area as far as possible.

Hold for 15 counts, then relax.

Repeat 3 times.

**Stretches**: Quadriceps and hip muscles.



# Moving the machine

Lift up the bike until the transportation wheels on the front foot tube touch the ground and push the bike when you want to move it.

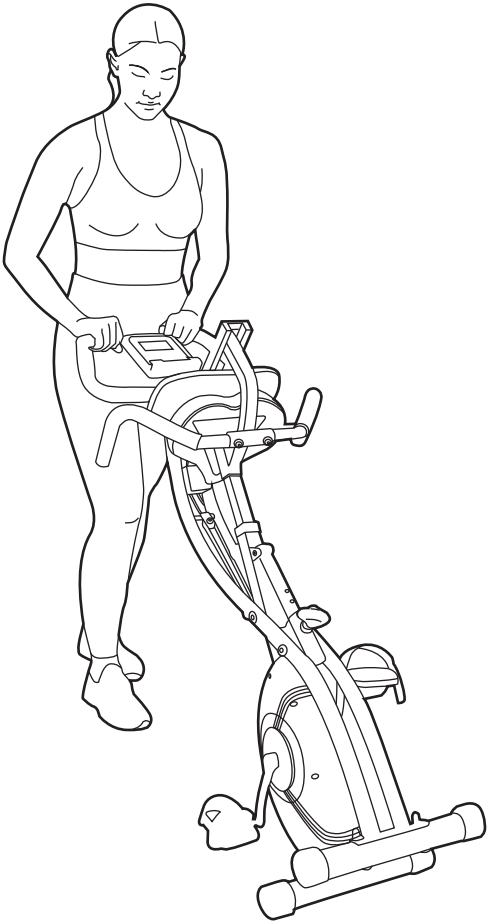

# List of components

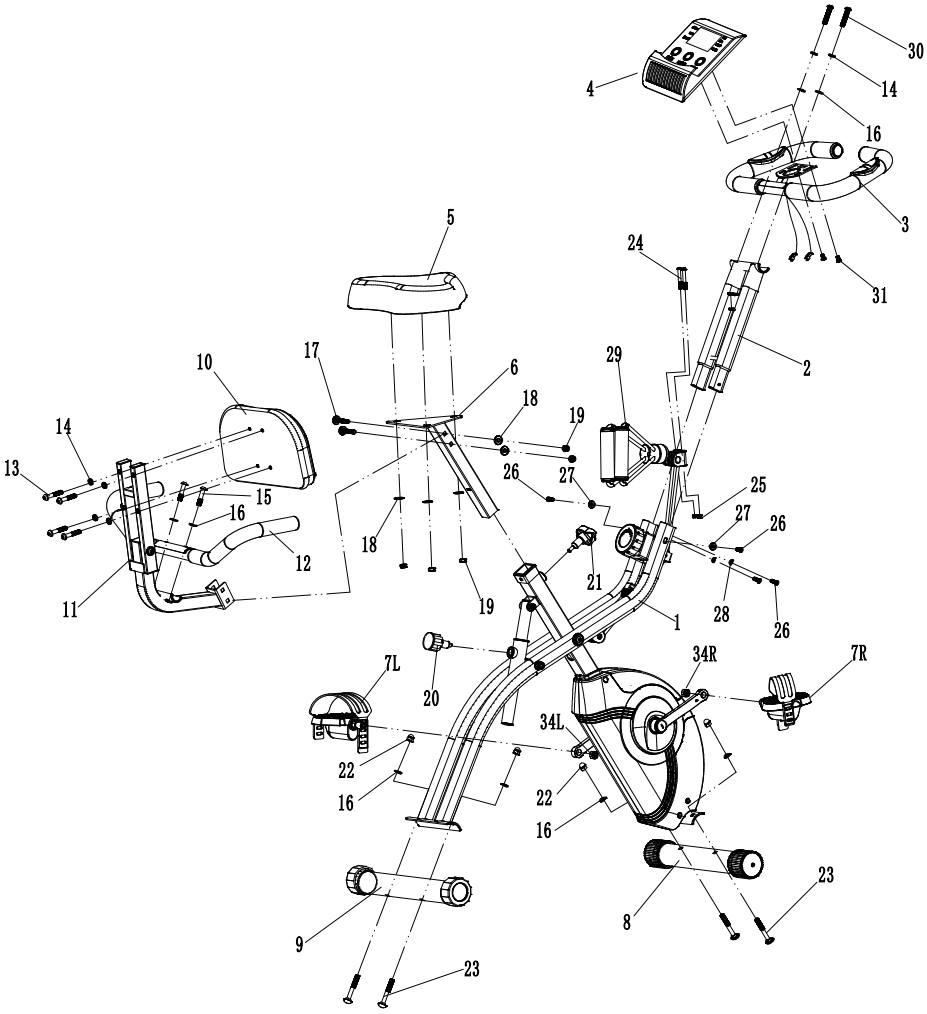

ativafit®

| NO | Part Name | Standard | QTY |
|---|---|---|---|
| 1 | Main frame | | 1 |
| 2 | Handlebar frame | | 1 |
| 3 | Handlebar | | 1 |
| 4 | Monitor | | 1 |
| 5 | Seat cushion | | 1 |
| 6 | Seat frame | | 1 |
| 7L/R | Pedal (Left)/(Right) | | 2 |
| 8 | Front foot tube | | 1 |
| 9 | Rear foot tube | | 1 |
| 10 | Back cushion | | 1 |
| 11 | Back frame | | 1 |
| 12 | Elbow | | 1 |
| 13 | Screw A | M8x45 | 4 |
| 14 | Spring washer | | 6 |
| 15 | Screw B | M8x40 | 2 |
| 16 | Curved washer | Φ8xΦ20x1.5 | 8 |
| 17 | Key head bolt B | M8x45 | 2 |

| NO | Part Name | Standard | QTY |
|---|---|---|---|
| 18 | Flat washer | Φ8xΦ16x1.2 | 5 |
| 19 | M8 nut | M8 | 5 |
| 20 | Cushion expansion tube adjustment knob | | 1 |
| 21 | Star adjustment knob | | 1 |
| 22 | Cap nut | M8 | 4 |
| 23 | Key head bolt A | M8x65 | 4 |
| 24 | Screw D | M6x45 | 2 |
| 25 | M6 nut | M6 | 2 |
| 26 | Screw C | M6x16 | 4 |
| 27 | Flat washer | Φ6xΦ22x1.2 | 2 |
| 28 | Curved washer | Φ6xΦ15x1.2 | 2 |
| 29 | Elastic rope | | 2 |
| 30 | Screw B | M8x40 | 2 |
| 31 | Screw | M5x10 | 2 |
| 32 | Pulse sensor line | | 1 |
| 33 | Speed sensor line | | 1 |
| 34L/R | Pedal nut (Left)/(Right) | | 2 |