Operator's Manual

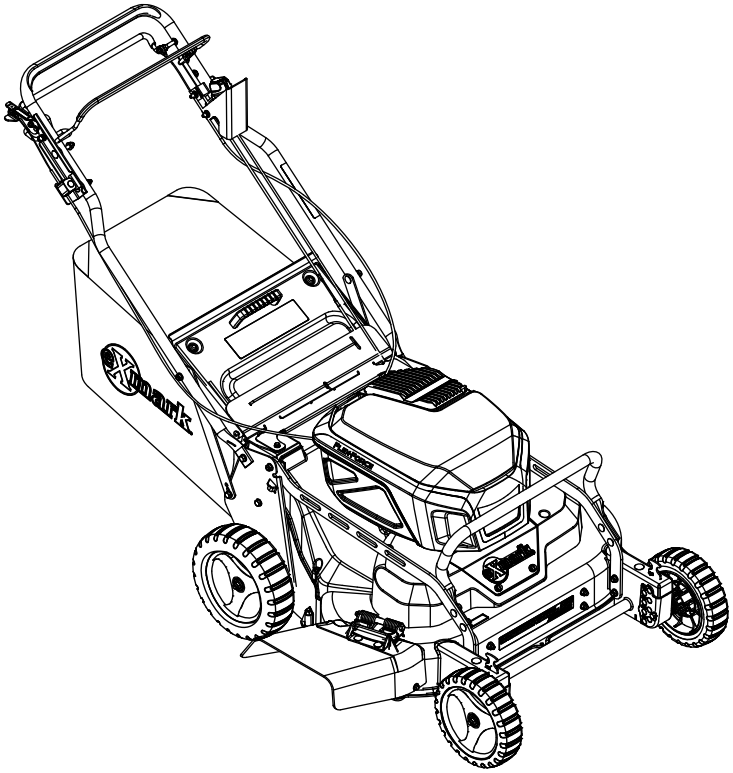

COMMERCIAL 30
V-SERIES

For Serial Nos.
416,150,475 & Higher
Part No. 4506-724 Rev. B

⚠ WARNING

CALIFORNIA
Proposition 65 Warning

The power cord on this product contains lead, a chemical known to the State of California to cause birth defects or other reproductive harm. Wash hands after handling.

Use of this product may cause exposure to chemicals known to the State of California to cause cancer, birth defects, or other reproductive harm.

©2024 Exmark Mfg. Co., Inc.
415 Industrial Row
Beatrice, NE 68310

Contact us at www.Exmark.com.
Printed in Mexico
All Rights Reserved

Introduction

CONGRATULATIONS on the purchase of your Exmark Mower. This product has been carefully designed and manufactured to give you a maximum amount of dependability and years of trouble-free operation.

This rotary-blade, walk-behind lawn mower is intended to be used by professional, hired operators. It is designed primarily for cutting grass on well-maintained lawns on residential or commercial properties. It is designed to use Exmark 60V lithium-ion battery packs. These battery packs are designed to be charged only by Exmark 60V lithium-ion battery chargers. Using these products for purposes other than their intended use could prove dangerous to you and bystanders.

Using these products for purposes other than their intended use could prove dangerous to you and bystanders.

This manual contains operating, maintenance, adjustment, and safety instructions for your Exmark mower.

BEFORE OPERATING YOUR MOWER, CAREFULLY READ THIS MANUAL IN ITS ENTIRETY.

By following the operating, maintenance, and safety instructions, you will prolong the life of your mower, maintain its maximum efficiency, and promote safe operation.

To maximize safety, performance, and proper operation of this machine, it is essential that all operators carefully read and fully understand the contents of the Operator's manual provided with the product. Failure to comply with the operating instructions or receive proper training may result in injury. Go to https://www.Exmark.com for additional safe operation information, such as safety tips, training materials, and Operator's manuals.

If additional information is needed, or should you require trained mechanic service, contact your authorized Exmark equipment dealer or distributor.

All Exmark equipment dealers and distributors are kept informed of the latest methods of servicing and are equipped to provide prompt and efficient service in the field or at their service stations. They carry ample stock of service parts or can secure them promptly for you from the factory.

All Exmark parts are thoroughly tested and inspected before leaving the factory, however, attention is required on your part if you are to obtain the fullest measure of satisfaction and performance.

Whenever you need service, genuine Exmark parts, or additional information, contact an Authorized Service Dealer or Exmark Customer Service and have the model and serial numbers of your product ready.

identifies the location of the model and serial numbers on the product. Write the numbers in the space provided.

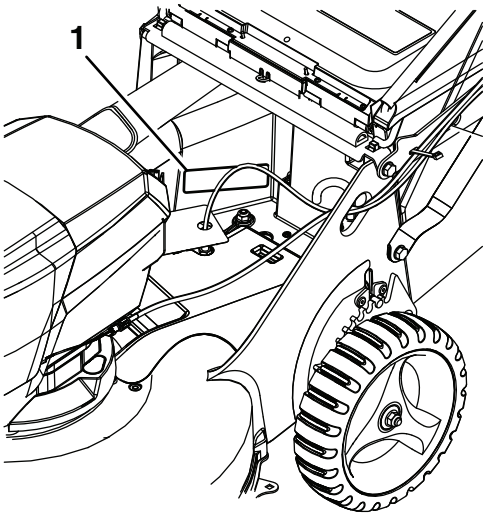

g373133

Figure 1

1. Model and serial number location

Model No. _____

Serial No. _____

For complete warranty details, see https://www.Exmark.com. You may also call us at 402-223-6375 to request a written copy of the product's warranty.

Safety-Alert Symbol

The safety-alert symbol (Figure 2) shown in this manual and on the machine identifies important safety messages that you must follow to prevent accidents.



g000502

Figure 2
Safety-alert symbol

The safety-alert symbol appears above information that alerts you to unsafe actions or situations and is followed by the word **DANGER**, **WARNING**, or **CAUTION**.

DANGER indicates an imminently hazardous situation which, if not avoided, **will** result in death or serious injury.

WARNING indicates a potentially hazardous situation which, if not avoided, **could** result in death or serious injury.

CAUTION indicates a potentially hazardous situation which, if not avoided, **may** result in minor or moderate injury.

This manual uses two other words to highlight information. **Important** calls attention to special mechanical information and **Note** emphasizes general information worthy of special attention.

Contents

Introduction 3
Safety-Alert Symbol..... 4
Safety 6
..... 6
Safety and Instructional Decals 9
Specifications 13
Systems 13
Dimensions.....13
Attachments/Accessories.....13
Product Overview 14
Operation 14
Controls.....14
Before Operation 15
During Operation.....17
After Operation.....22
Maintenance 23
Recommended Maintenance Schedule(s) 23
Periodic Maintenance 23
Checking the Mower Blade 23
Check for Loose Hardware 26
Check Condition Of Belt 26
Check the Blade Drive System.....26
Change Transmission Belt 27
Adjustments 29
Adjusting the Self-Propel Drive 29
Adjusting the Parking-Brake Cable.....29
Cleaning 30
Clean Grass Build-Up Under Deck 30
Cleaning the Discharge Tunnel and Plug.....30
Cleaning Under the Belt Cover.....31
Cleaning the Wheels 31
Storage 32
Preparing the Battery Pack for Recycling.....32
Troubleshooting 33
California Proposition 65 Warning Information 35

Safety

IMPORTANT SAFETY INSTRUCTIONS

⚠ WARNING

When using electric lawn mowers, basic safety precautions should always be followed to reduce the risk of fire, electric shock, and personal injury, including the following:

Read All Instructions

I. Training

1. The operator of the machine is responsible for any accidents or hazards occurring to others or their property.
2. Do not allow children to use or play with the machine, battery pack, or the battery charger; local regulations may restrict the age of the operator.
3. Do not allow children or untrained people to operate or service this device. Allow only people who are responsible, trained, familiar with the instructions, and physically capable to operate or service the device.
4. Before using the machine, battery pack, and battery charger, read all the instructions and cautionary markings on these products.
5. Become familiar with the controls and proper use of the machine, battery pack, and battery charger.

II. Preparation

1. Keep bystanders, especially children and pets, out of the operating area.
2. Do not operate the machine without all guards and safety devices, such as deflectors and grass catchers, in place and functioning properly on the machine.
3. Inspect the area where you will use the machine and remove all objects that could interfere with the operation of the machine or that the machine could throw.
4. Before using the machine, ensure that the blade, blade bolt, and blade assembly are not worn or damaged. Replace any damaged or unreadable labels.
5. Use only the battery pack specified by Exmark. Using other accessories and attachments may increase the risk of injury and fire.
6. Plugging the battery charger into an outlet that is not 120V can cause a fire or electric shock. Do not plug the battery charger into an outlet other than 120V. For a different style of connection, use an attachment plug adapter of the proper configuration for the power outlet if needed.
7. Do not use a damaged or modified battery pack or battery charger, which may exhibit unpredictable behavior that results in fire, explosion, or risk of injury.
8. If the supply cord to the battery charger is damaged, contact an Authorized Service Dealer to replace it.
9. Charge the battery pack with only the battery charger specified by Exmark. A charger suitable for 1 type of battery pack may create a risk of fire when used with another battery pack.
10. Charge the battery pack in a well-ventilated area only.
11. Follow all charging instructions and do not charge the battery pack outside of the temperature range specified in the instructions. Otherwise, you may damage the battery pack and increase the risk of fire.
12. Dress properly—Wear appropriate clothing, including eye protection; long pants; substantial, slip-resistant footwear (not barefoot or wearing sandals); and hearing protection. Tie back long hair and do not wear loose clothing or loose jewelry that can get caught in moving parts. Wear a dust mask in dusty operating conditions. Use of rubber gloves is recommended.

III. Operation

1. Contact with the moving blade will cause serious injury. Keep your hands and feet away from the cutting area and all moving parts of the machine. Keep clear of any discharge opening.
2. Using this machine for purposes other than its intended use could prove dangerous to you and bystanders.
3. Disengage the self-propel drive (if equipped) before starting the machine.
4. Do not tilt the machine when starting the motor.

5. Prevent unintentional starting—Ensure that the electric-start button is removed from the electric-start switch before connecting the battery pack and handling the machine.
6. Use your full attention while operating the machine. Do not engage in any activity that causes distractions; otherwise, injury or property damage may occur.
7. Stop the machine, remove the electric-start button, remove the battery pack from the machine, and wait for all movement to stop before adjusting, servicing, cleaning, or storing the machine.
8. Remove the battery pack and electric-start button from the machine whenever you leave it unattended or before changing accessories.
9. Do not force the machine—Allow the machine to do the job better and safer at the rate for which it was designed.
10. Stay alert—Watch what you are doing and use common sense when operating the machine. Do not use the machine while ill, tired, or under the influence of alcohol or drugs.
11. Do not use a battery-operated lawn mower in rain.
12. Operate the machine only in good visibility and appropriate weather conditions. Do not operate the machine when there is the risk of lightning.
13. Use extreme caution when reversing or pulling the machine toward you.
14. Keep proper footing and balance at all times, especially on slopes. Mow across the face of slopes, never up and down. Use extreme caution when changing directions on slopes. Do not mow exceedingly steep slopes. Walk, never run with the machine.
15. Do not direct the discharge material toward anyone. Avoid discharging material against a wall or obstruction; material may ricochet toward you. Stop the blade(s) when crossing surfaces other than grass.
16. Watch for holes, ruts, bumps, rocks, or other hidden objects. Uneven terrain could cause you to lose your balance or footing.
17. Wet grass or leaves can cause serious injury if you slip and contact the blade. Do not mow in wet conditions. Do not mow when it is raining.
18. If the machine strikes an object or starts to vibrate, immediately shut off the machine, remove the electric-start button, remove the battery pack, and wait for all movement to stop before examining the machine for damage. Make all necessary repairs before resuming operation.
19. Stop the machine and remove the electric-start button before loading the machine for hauling.
20. Under abusive conditions, the battery pack may eject liquid; avoid contact. If you accidently come into contact with the liquid, flush with water. If the liquid contacts your eyes, seek medical help. Liquid ejected from the battery pack may cause irritation or burns.

IV. Maintenance and Storage

1. Stop the machine, remove the electric-start button, remove the battery pack from the machine, and wait for all movement to stop before adjusting, servicing, cleaning, or storing the machine.
2. Do not attempt to repair the machine except as indicated in the instructions. Have an Authorized Service Dealer perform service on the machine using identical replacement parts.
3. Wear gloves and eye protection when servicing the machine.
4. Sharpen a dull blade on both edges to maintain balance. Clean the blade and ensure that it is balanced.
5. Replace the blade if it is bent, worn, or cracked. An unbalanced blade causes vibration, which could damage the motor or cause personal injury.
6. When servicing the blade, be aware that the blade can still move even though the power source is off.
7. Check the grass collection bag frequently for deterioration or wear, and replace a worn bag with a Exmark [replacement] bag.
8. For best performance, use only genuine Exmark replacement parts and accessories. Other replacement parts and accessories could be dangerous, and such use could void the product warranty.
9. Maintain the machine—Keep cutting edges sharp and clean for the best and safest performance. Keep handles dry, clean, and free from oil and grease. Keep guards in place and in working order. Keep blades sharp. Use identical replacement blades only.

10. Check the machine for damaged parts—If there are damaged guards or other parts, determine whether the machine will operate properly. Check for misaligned and binding moving parts, broken parts, mounting, and any other condition that may affect its operation. Unless indicated in the instructions, have an Authorized Service Dealer repair or replace a damaged guard or part.
11. When the battery pack is not in use, keep it away from metal objects such as paper clips, coins, keys, nails, and screws that can make a connection from one terminal to another. Shorting the battery terminals may cause burns or a fire.
12. Check the blade and motor mounting bolts frequently for tightness.
13. When you are not using the machine, store it indoors in a dry, secure place out of the reach of children.
14. Do not expose a battery pack or machine to fire or excessive temperature. Exposure to fire or temperature above 130°C (265°F) may cause explosion.
15. CAUTION—A mistreated battery pack may present a risk of fire, explosion, or chemical burn.
    - Do not disassemble the battery pack.
    - Replace the battery pack with a genuine Exmark battery pack only; using another type of battery pack may cause a fire or risk of injury.
    - Keep battery packs out of the reach of children and in the original packaging until you are ready to use them.

SAVE THESE INSTRUCTIONS

Safety and Instructional Decals

- Keep all safety signs legible. Remove all grease, dirt and debris from safety signs and instructional labels.
- Replace all worn, damaged, or missing safety signs.
- When replacement components are installed, be sure that current safety signs are affixed to the replaced components.
- If an attachment or accessory has been installed, make sure current safety signs are visible.
- New safety signs may be obtained from your authorized Exmark equipment dealer or distributor or from Exmark Mfg. Co. Inc.
- Safety signs may be affixed by peeling off the backing to expose the adhesive surface. Apply only to a clean, dry surface. Smooth to remove any air bubbles.
- Familiarize yourself with the following safety signs and instruction labels. They are critical to the safe operation of your Exmark commercial mower.



decal94-8072

94-8072



decal116-7581

116-7581

1. Cutting/dismemberment hazard of hand or foot, mower blade—stay away from moving parts. Read the *Operator's Manual* before adjusting servicing, or cleaning the machine.

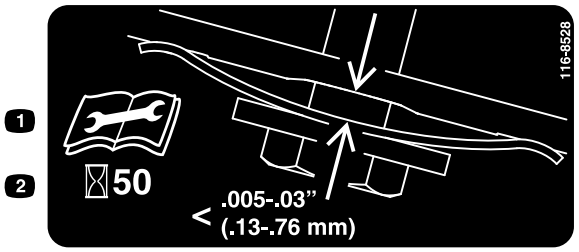

decal116-8528

116-8528

1. Read the *Operator's Manual* before performing any maintenance.
2. Check belt tension every 50 operating hours.



decal120-9570

120-9570

1. Warning—stay away from moving parts, keep all guards and shields in place.



decal133-8054

133-8054

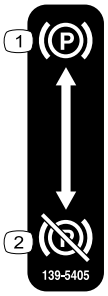

decal139-5405

139-5405

1. Parking brake—engage
2. Parking brake—disengage

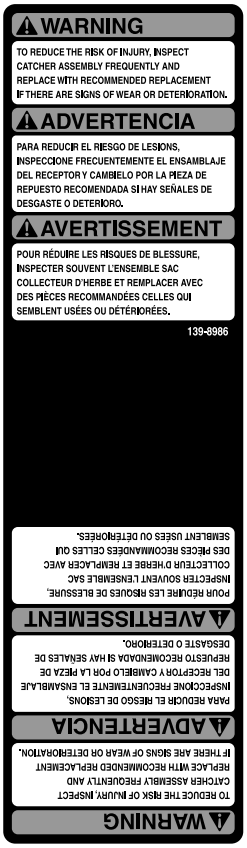

decal139-8986

139-8986

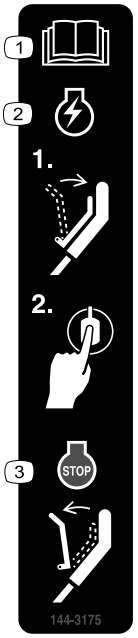

decal144-3175

144-3175

1. Read the *Operator's Manual*.
2. To start the machine, squeeze the bar to the handle and press the button.
3. To shut off the machine, release the bar.



decal142-8391

142-8391

1. The battery pack is charging.
2. The battery pack is fully charged.
3. The battery pack is over or under the appropriate temperature range.
4. Battery pack charging fault.

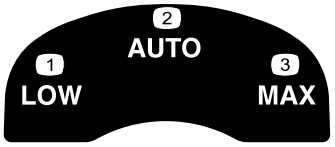

decal145-4009

145-4009

1. Low speed
2. Auto speed
3. Max speed

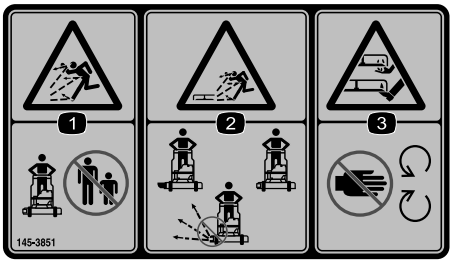

decal145-3851

145-3851

1. Thrown object hazard—keep bystanders away
2. Thrown object hazard from discharge chute—Do not operate the machine without the side-discharge plug, chute, or deflector in place.
3. Cutting/dismemberment hazard of hand or foot, mower blade—stay away from moving parts.



decal145-8265

145-8265

1. Battery charge status



decal146-0241

146-0241



decal146-0242

146-0242

1. Read the Operator's manual.
2. Keep away from open fire or flames.
3. Do not expose to rain.



decal116-7583

116-7583

1. Warning—read the *Operator's Manual*; do not operate this machine unless you are trained.
2. Thrown object hazard—keep bystanders away.
3. Thrown object hazard—do not operate the mower without the rear discharge plug or bag in place.
4. Cutting/dismemberment hazard of hand or foot, mower blade—stay away from moving parts; keep all guards in place.
5. Warning—wear hearing protection.
6. Cutting/dismemberment hazard of hand or foot, mower blade—do not operate up and down slopes; operate side to side on slopes; shut off the engine before leaving the machine; pick up any debris before mowing; look behind you when moving in reverse.



decal142-8393

142-8393

Specifications

Systems

Battery Pack

Part No.	142-9132
Battery pack capacity	10.0 Ah
	540 Wh
Battery manufacturer rating = 60V maximum and 54V nominal. Actual voltage varies with load.	

Battery Charger

Part No.	142-8383
Type	60V MAX Lithium-Ion Battery Rapid Charger
Input	120V AC ~5.0A, 60Hz
Output	60V DC ⎓ 5.5A MAX

Appropriate Temperature Ranges

Charge battery pack at	5°C (41°F) to 40°C (104°F)*
Use battery pack at	-30°C (-22°F) to 49°C (120°F)
Store battery pack/charger at	5°C (41°F) to 40°C (104°F)*

*Charging time will increase if you do not charge the battery pack within this range.

Store the machine, battery pack, and battery charger in an enclosed clean, dry area.

Safety Interlock System

Operator must have the blade control bail depressed to start the motor. Releasing the blade control bail will cause the motor to stop.

Transmission

Variable

Speed Range: 0–3.5 mph (5.6 km/hr)

Cutting Deck

- Cutting Width: 30 inches (76.2 cm)
- Blade Size: (2 ea.): 15.4 inches (39.1 cm)
- Deck: 30 inches rigid. Deck design allows for bagging, or mulching.
- Cutting Height Adjustment:

  Adjusts from 1 1/2 inch (3.8 cm) to 5 inches (12.7 cm) in 1/2 inch (1.3 cm) increments.
- Mulching Kit: Standard

Dimensions

Curb Weight:

169 lb (76.6 kg)

Overall Width:

32 inches (81 cm)

Overall Length and Height at 2 1/2 inch Cutting Height:

Handle Setting	Length	Height
High	61.00 inches (154.9 cm)	39.00 inches (99.1 cm)
Medium	63.00 inches (160.0 cm)	37.50 inches (95.3 cm)
Low	64.50 inches (163.8 cm)	35.00 inches (88.9 cm)

Attachments/Accessories

A selection of Exmark approved attachments and accessories is available for use with the machine to enhance and expand its capabilities. Contact your Authorized Service Dealer or authorized Exmark distributor or go to www.Exmark.com for a list of all approved attachments and accessories.

To ensure optimum performance and continued safety certification of the machine, use only genuine Exmark replacement parts and accessories. Replacement parts and accessories made by other manufacturers could be dangerous, and such use could void the product warranty.

Product Overview

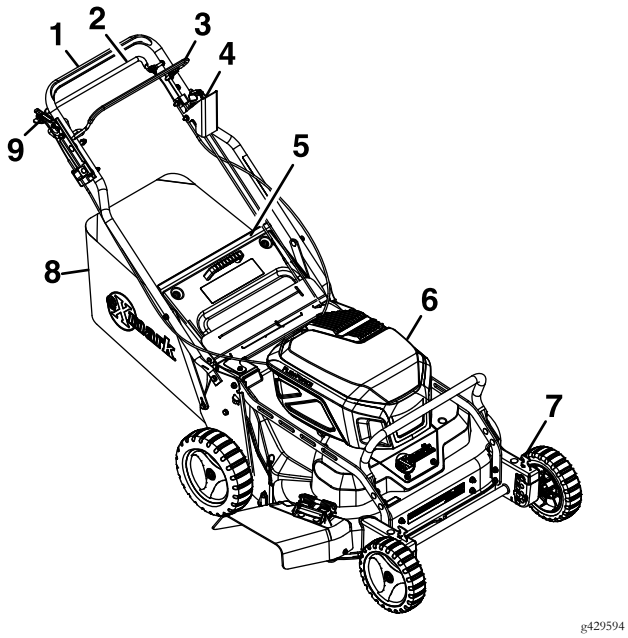

Figure 3

1. Handle
2. Self-propel drive bail
3. Blade control bail
4. Blade speed switch and electric start button
5. Discharge door
6. Battery compartment
7. Front wheel height adjustment
8. Grass bag
9. Park brake

Operation

Note: Determine the left and right sides of the machine from the normal operating position.

Controls

Note: Become familiar with all the controls before starting the motor and operating the machine.

Blade Control Bail

Located on the upper handle as shown in Figure 4.

When the blade control bail is depressed, the system senses that the operator is in the normal operator's position.

When the blade control bail is released, the system senses that the operator has moved from the normal operating position and will stop the machine.

When the blade control bail is released, the blade should stop within 3 seconds. If not, stop using the machine immediately and contact an Authorized Service Dealer.

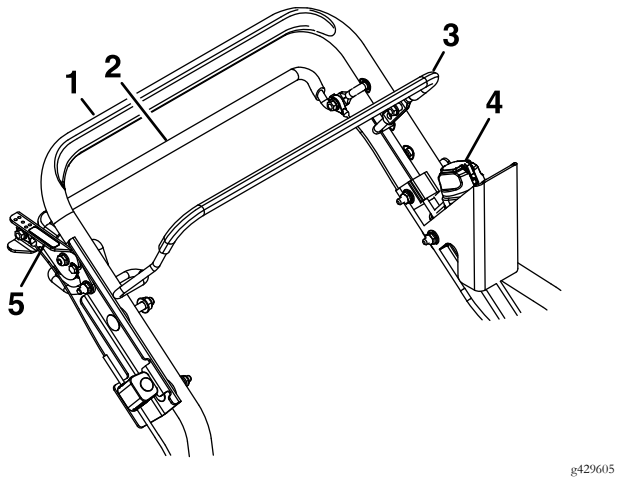

Figure 4

1. Handle
2. Self-propel drive bail
3. Blade control bar
4. Blade speed switch and electric start button
5. Park brake

Self-Propel Drive Bail

Located on the upper handle as shown in Figure 4.

When the self-propel drive bail is squeezed against the handle, the machine ground speed will change based on the distance between the bail and the

handle. When this bail is released the machine will stop moving.

Electric Start Button

Located on the upper handle, on the left side, in front of the self-propel bail.

The electric start button is used to start the machine.

Insert the button into the starter switch. Press the button and squeeze and hold the blade control bar to the handle.

Blade Speed Switch

The machine has three blade speed settings: ”LOW”, AUTO”, and “MAX”. Turn the key in the key switch to either position to adjust the blade speed setting.

Park Brake Lever

Located on the upper handle.

Engage the parking brake by pulling the brake lever up towards the handle.

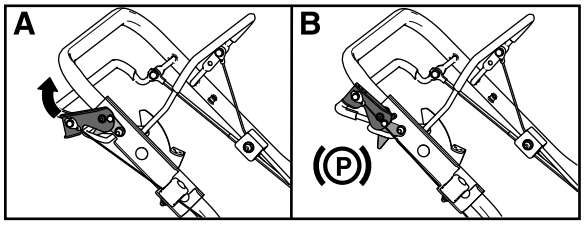

g288835

Figure 5

Disengage the parking brake by pushing the brake lever down away from the handle.

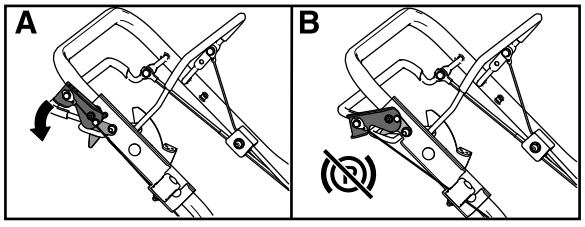

g288933

Figure 6

Before Operation

Installing the Battery Pack

Important: Use the battery pack only in temperatures that are within the appropriate range.

1. Make sure that the vents on the battery are clear of any dust and debris.
2. Lift up the battery-compartment lid.
3. Line up the cavity in the battery pack with the tongue on the machine and slide the battery pack into the compartment until it locks into place.
4. Close the battery-compartment lid.

   Note: If the battery-compartment lid does not close completely, the battery is not fully installed.

Adjusting the Handle Height

The height of the handle can be adjusted for comfortable operation. Stand behind the handle to determine the height. To adjust the handle height, position the hardware into one of the three holes in the handle bracket.

Adjusting the Cutting Height

The rear wheels are adjusted together with a height adjustment rod located on the mower housing by the left rear wheel. The front wheels are adjusted separately by removing the front wheel shaft assemblies, adjusting the height, and then replacing the shaft assemblies. The cutting height can be adjusted from 1 1/2 inches (38 mm) to 5 inches (127 mm) in 1/2 inch (12.7 mm) increments.

⚠ DANGER

Adjusting the height-of-cut could bring your hands into contact with a moving blade and result in serious injury.

- **Shut off the motor, remove the battery, and wait for all moving parts to stop before adjusting the cutting height.**
- **Do not put your fingers under the housing when adjusting the cutting height.**

- **Rear Wheel Adjustment:**

  1. Pull the wheel height adjustment rod upward to release the pin from the notch in the adjustment bracket (Figure 7).

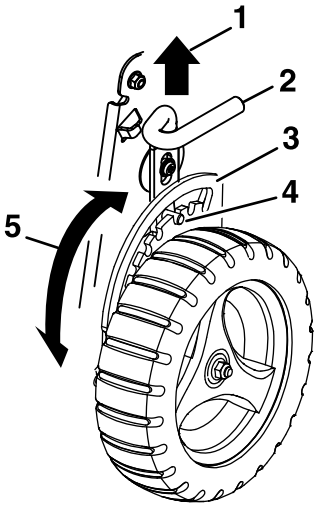

g411211

Figure 7

1. Pull upward
2. Wheel height adjustment rod
3. Adjustment bracket
4. Pin
5. Rotate to desired setting

2. Apply downward pressure or lift the housing to rotate the height adjustment bracket to the desired setting.
3. Release the wheel height adjustment rod to set the pin securely in the desired notch.

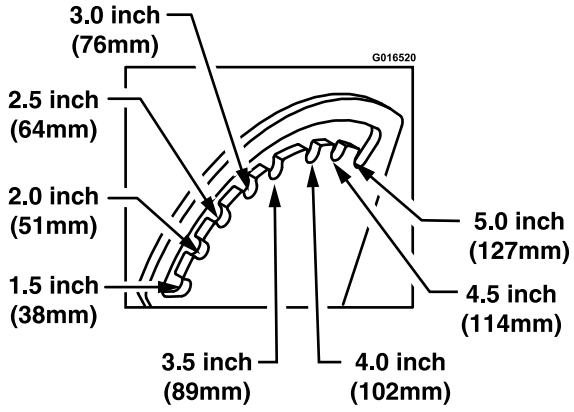

g016520

Figure 8

- **Front Wheel Adjustment**

1. Pull up on the height adjuster and pull the front wheel shaft assembly outward as shown in Figure 9.

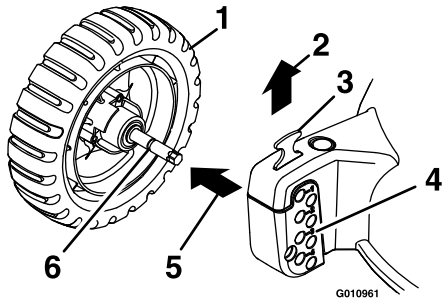

g010961

Figure 9

1. Front wheel shaft assembly
2. Pull up
3. Height adjuster
4. Front quadrant block cut heights
5. Pull outward
6. Shaft groove

2. Insert the front wheel shaft assembly into the desired cut height setting in the front quadrant block. Lower the height lock into the groove on the front wheel shaft. Pull and push the wheel shaft assembly to make sure it has locked into place.

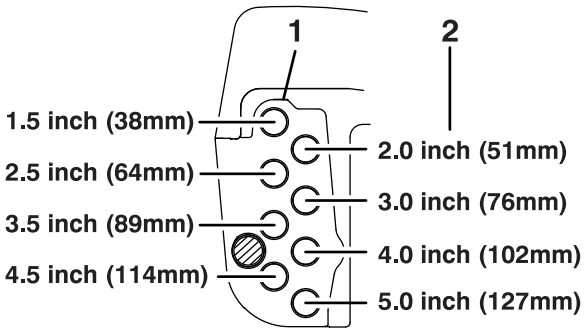

g437849

Figure 10

1. Front quadrant block
2. Cutting heights

During Operation

Starting the Machine

1. Ensure that the battery pack is installed in the machine.
2. Insert the electric start button into the electric starter switch (A of Figure 11).
3. Squeeze the blade control bail and hold it to the handle for two seconds (B of Figure 11).
4. Press the electric start button and keep it pressed until the motor starts (C of Figure 11).

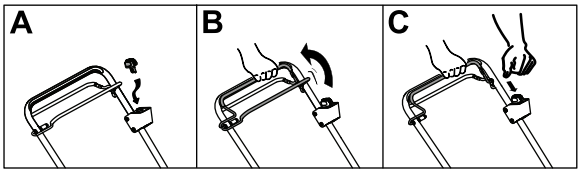

g378095

Figure 11

Stopping the Machine

1. Bring the machine to a full stop.
2. Release the blade control bail (A of Figure 12).

   The blade should stop within three seconds.

   Note: If the blade does not stop within 3 seconds after releasing the blade control bail, contact an Authorized Service Dealer.
3. Remove the electric start button from the electric starter (B of Figure 12).
4. Remove the battery pack.

   Note: Whenever you are not using the machine, remove the battery pack.

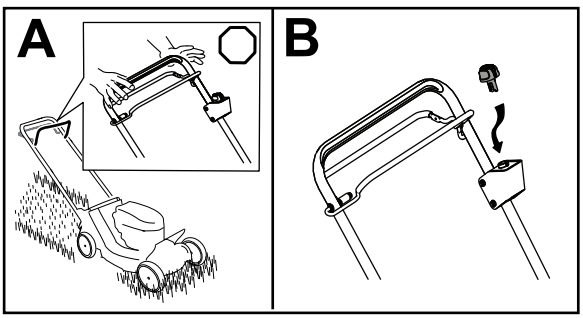

g380663

Figure 12

Operating the Self-Propel Drive

The lawn mower is variable speed, the more you squeeze the drive bail against the handle the faster the machine travels.

1. Start the machine.
2. Squeeze the drive bail against the handle.

   Note: You can vary the ground speed by increasing or decreasing the distance between the ground speed control bail and the handle. Lower the control bail to decrease the ground speed when you are making a turn or if the lawn mower is moving too fast for you. If you lower the control bail too far the lawn mower stops self-propelling. Squeeze the ground speed control bail closer to the handle to increase the ground speed. When you hold the ground speed control bail tight against the handle, the lawn mower self-propels at the maximum ground speed. Release the drive bail to stop moving when you use the lawn mower for trimming or whenever you leave the lawn mower.
3. To disengage the self-propel drive, release the drive bail.

   Note: The mower comes with freewheeling clutches which make it easier to pull the mower rearward. To disengage the clutches, you may need to push the mower forward one inch (2.5 cm) or more after you release the self-propel drive bail.

Adjusting the Blade Speed

This machine has three blade speed settings: Auto, Max, and Low.

- When set to the Auto position, the blade speed is adjusted automatically for greater efficiency; changes in cutting conditions are detected and the blade speed increases when necessary to maintain quality of cut.
- When set to the Max position, the blade speed remains at the highest speed at all times.
- When set to the Low position, the blade speed remains at the lowest speed at all times.

Turn the electric-start button in the electric start switch to adjust the blade speed setting (Figure 13).

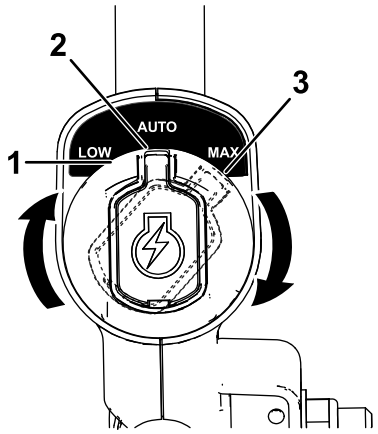

Figure 13

1. Low position
2. Auto position
3. Max position

Using the Mulch Plug

Occasionally you may wish to use the mulch plug to mulch the grass and leaf clippings back into the lawn.

- **Installing the Mulch Plug:**

1. Shut off the machine and wait for all moving parts to stop.
2. Remove the grass bag if it is on the mower.
3. Raise the discharge door and insert the mulch plug into the discharge opening. The lip on the plug will snap into the mower housing.
4. Lower the discharge door.

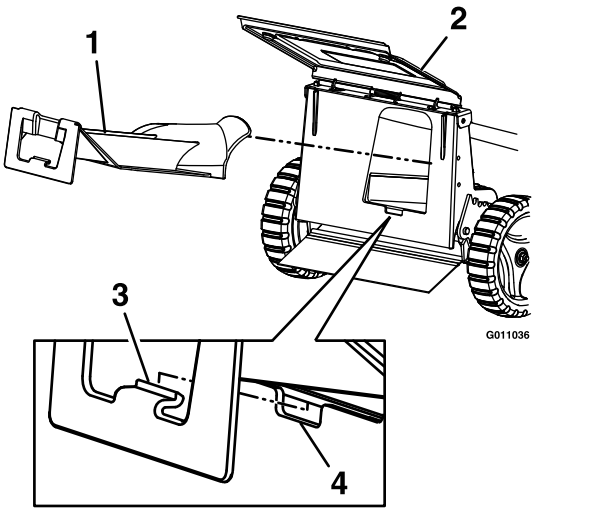

Figure 14

1. Mulch plug
2. Discharge door
3. Lip
4. Mower housing

- **Removing the Mulch Plug:**

1. Shut off the machine and wait for all moving parts to stop.
2. Remove the grass bag if it is on the mower.
3. Raise the discharge door and pull the mulch plug out of the discharge tunnel.
4. Lower the discharge door.

Note: When grass is thick and lush, clippings may collect on and around the discharge tunnel plug. This may make it difficult to remove the plug. Clean the plug thoroughly after each use.

Using the Grass Bag

- **Installing the Grass Bag**

1. Shut off the machine and wait for all moving parts to stop.
2. Open the rear door.
3. Remove the mulch plug if it is installed.
4. Grasp the handle on the bag and set the rear of the bag frame onto the door hinge bracket (Figure 15).

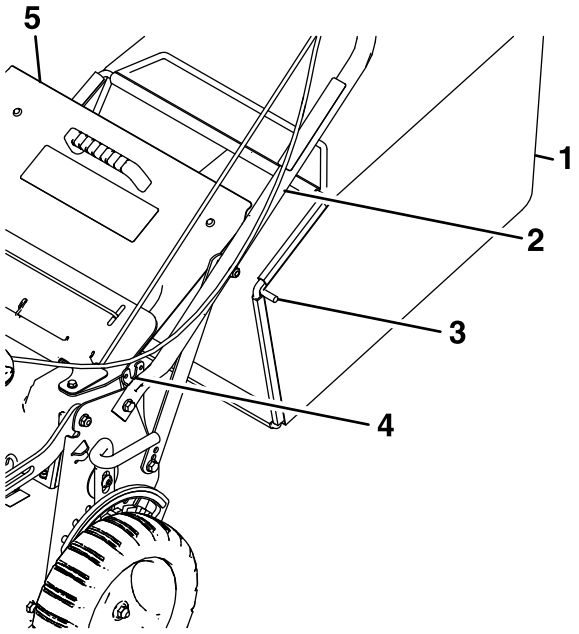

g429650

Figure 15

1. Bag
2. Handle
3. Bag frame
4. Door hinge bracket
5. Rear door
6. Lower

5. Once the bag is seated, lower the rear door onto the bag.

- **Mowing with the Grass Bag**

  Cut the grass until the bag is full.

  Note: Do Not overfill the bag.

- **Removing the Grass Bag**

1. Shut off the machine and wait for all moving parts to stop.
2. Raise the rear discharge door and grasp the handle on the bag.
3. Lift the bag off of the lawn mower and lower the rear discharge door.
4. Gradually tip the bag forward to empty the clippings.
5. To install the bag, refer to the section on **Installing the Grass Bag**.

⚠ DANGER

The machine can throw grass clippings and other objects through an opening in the machine housing. Objects thrown with enough force could cause serious personal injury or death to you or to bystanders.

- **Never remove the grass bag and then start the machine without the discharge plug installed on the machine.**
- **Never open the rear deflector on the machine when the machine is running.**

Test Using the Grass Bag

1. Install the empty grass bag on the discharge tunnel.
2. Squeeze the blade control bail against the handle and start the machine.
3. The bag should begin to inflate, indicating that the blade is engaged and rotating.
4. Release the blade control bail. If the bag does not immediately deflate, it indicates that the blade is still rotating.

Using the Side Discharge Deflector

Do not operate the mower without either the side discharge cover or discharge deflector installed.

- **Installing the Discharge Deflector:**

1. Shut off the machine and wait for all moving parts to stop.
2. Remove the grass bag if it is installed on the machine and install the mulch plug.
3. Remove and retain the side discharge cover by pulling up on the spring.
4. Install the discharge deflector by pulling up on the spring, placing the deflector over the opening, and lowering the spring over the tabs on the discharge deflector.

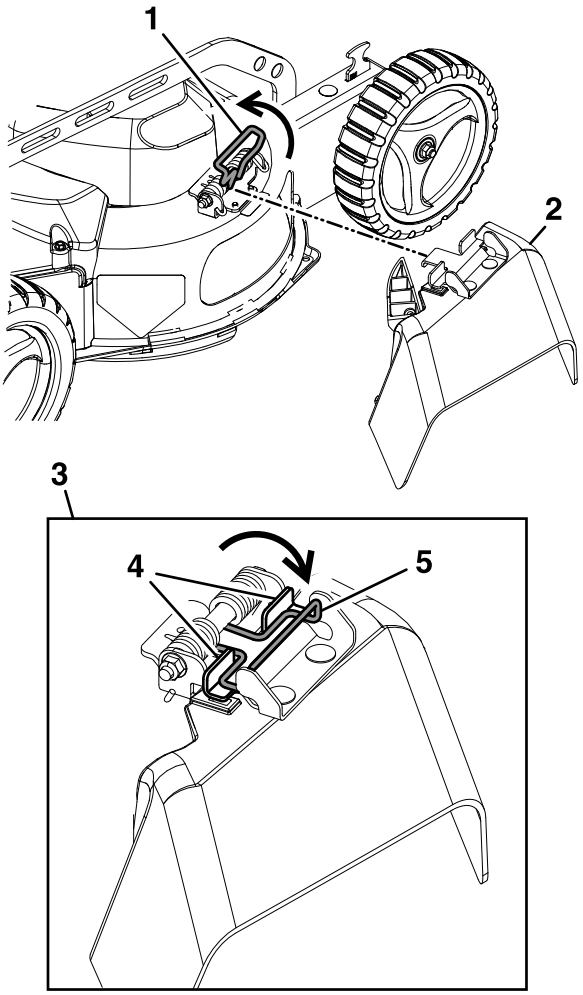

Figure 16

1. Pull up on spring
2. Discharge deflector
3. Discharge deflector — installed view
4. Discharge deflector tabs
5. Spring lowered

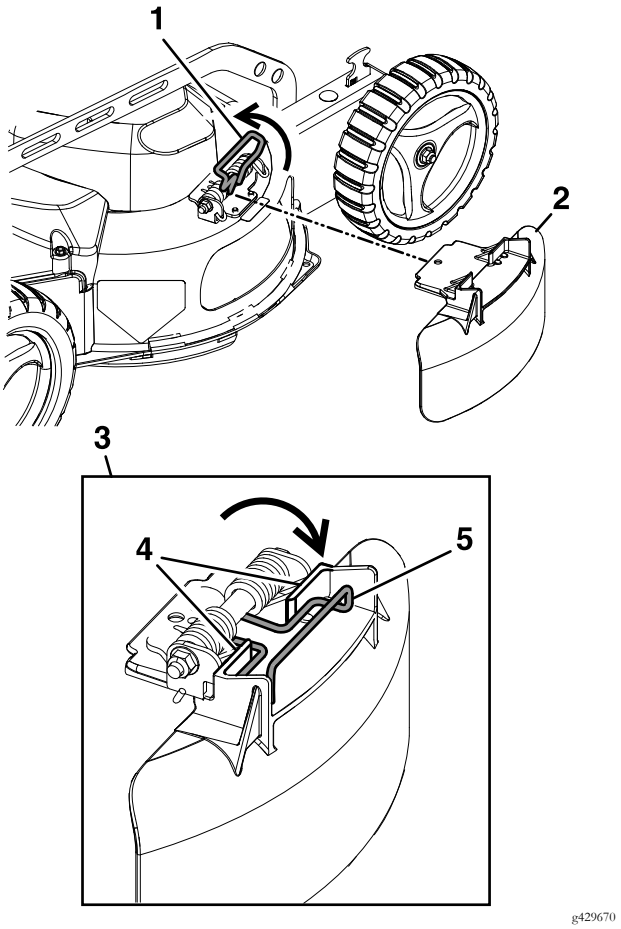

Figure 17

1. Pull up on spring
2. Side discharge cover
3. Side discharge cover — installed view
4. Side discharge cover tabs
5. Spring lowered

Important: Ensure that the mulch plug is in place before you recycle the clippings.

- **Removing the Discharge Deflector:**

  Do not operate the mower without either the side discharge cover or discharge deflector installed.

  1. Shut off the machine and wait for all moving parts to stop.
  2. Remove and retain the discharge deflector by pulling up on the spring.
  3. Install the side discharge cover by pulling up on the spring, placing the cover over the opening, and lowering the spring over the tabs on the side discharge cover.

Operating Tips

General Tips

- Review the safety instructions and read this manual carefully before operating the machine.
- Clear the area of sticks, stones, wire, branches, and other debris that the blades could hit and throw.
- Keep everyone, especially children and pets, away from the area of operation.
- Avoid striking trees, walls, curbs, or other solid objects. Never deliberately mow over any object.
- If the machine strikes an object or starts to vibrate, immediately shut off the machine, wait for all moving parts to stop, remove the battery pack from the machine, and examine the machine for damage.

- Maintain sharp blades throughout the cutting season. Periodically file down nicks on the blades.
- Replace the blades when necessary with original Exmark replacement blades.
- Mow only dry grass or leaves. Wet grass and leaves tend to clump on the yard and can cause the machine to plug or the motor to stall.
- Clean the underside of the machine deck after each mowing.

Cutting Grass

- Grass grows at different rates at different times of the year. In the summer heat, it is best to cut grass at the 51 mm (2 inch), 64 mm (2-1/2 inch), or 83 mm (3 inch) cutting-height settings. Cut only about a third of the grass blade at a time. Do not cut below the 51 mm (2 inch) setting unless the grass is sparse or it is late fall when grass growth begins to slow down.
- When cutting grass over 15 cm (6 inches) tall, first mow at the highest cutting-height setting and walk slower; then mow again at a lower setting for the best lawn appearance. If the grass is too long, the machine may plug and cause the motor to stall.
- Be aware of a potential fire hazard in very dry conditions, follow all local fire warnings, and keep the machine free of dry grass and leaf debris.
- Alternate the mowing direction. This helps disperse the clippings over the lawn for even fertilization.

If the finished lawn appearance is unsatisfactory, try one or more of the following:

- Replace the blade or have it sharpened.
- Walk at a slower pace while mowing.
- Raise the cutting height on your machine.
- Cut the grass more frequently.
- Overlap cutting swaths instead of cutting a full swath with each pass.

Cutting Leaves

- After cutting the lawn, ensure that half of the lawn shows through the cut leaf cover. You may need to make more than a single pass over the leaves.
- For light leaf coverage, set all the wheels at the same cutting-height setting.
- If there are more than 13 cm (5 inches) of leaves on the lawn, mow at a higher cutting height and then again at the desired cutting height.
- Slow down your mowing speed if the machine does not cut the leaves finely enough.

After Operation

Removing the Battery Pack from the Machine

1. Lift up the battery-compartment lid.
2. Press the battery-pack latch to release the battery pack and remove the battery pack.
3. Close the battery-compartment lid.

Charging the Battery Pack

Important: The battery pack is not fully charged when you purchase it. Before using the tool for the first time, place the battery pack in the charger and charge it until the LED display indicates the battery pack is fully charged. Read all safety precautions.

Important: Charge the battery pack only in temperatures that are within the appropriate range; refer to the Specification section.

Note: At any time, press the battery-charge-indicator button on the battery pack to display the current charge (LED indicators).

1. Ensure that the vents on the battery and charger are clear of any dust and debris.

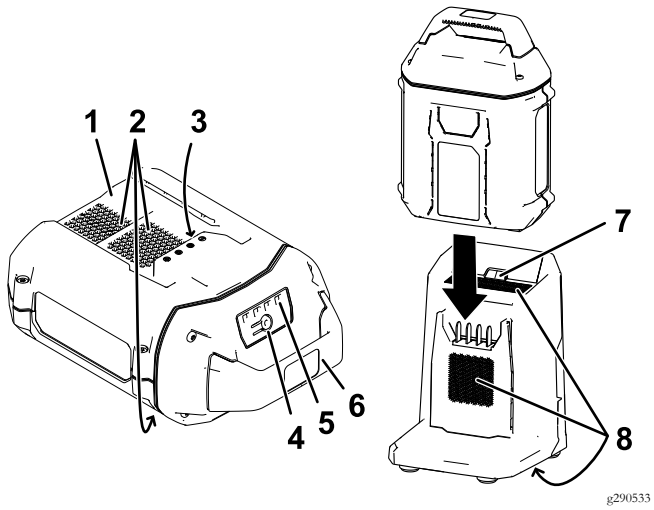

Figure 18

1. Battery pack cavity
2. Battery pack venting areas
3. Battery pack terminals
4. Battery-charge-indicator button
5. LED indicators (current charge)
6. Handle
7. Charger LED indicator light
8. Charger venting areas

2. Line up the cavity in the battery pack (Figure 18) with the tongue on the charger.
3. Slide the battery pack into the charger until it is fully seated (Figure 18).
4. To remove the battery pack, slide the battery backward out of the charger.
5. Refer to the following table to interpret the LED indicator light on the battery charger.

Indicator light	Indicates
Off	No battery pack inserted
Green blinking	Battery pack is charging
Green	Battery pack is charged
Red	Battery pack and/or battery charger is over or under the appropriate temperature range
Red blinking	Battery pack charging fault*

*Refer to the **Specifications** section for more information.

Important: The battery can be left on the charger for short periods between uses.

If the battery will not be used for longer periods, remove the battery from the charger.

Transporting the Machine

- Use extreme care when loading and unloading the machine into a trailer or truck.
- Use full width ramps for loading the machine into a trailer or truck.
- Tie the machine down securely using straps, chains, cable or ropes. If possible both front and rear straps should be directed down and outward from the machine.
- Be sure to remove the battery during transport.

Maintenance

Note: Determine the left and right sides of the machine from the normal operating position.

Recommended Maintenance Schedule(s)

Maintenance Service Interval	Maintenance Procedure
After the first 5 hours	• Check the blade drive system.
After the first 25 hours	• Tighten any loose fasteners.
Before each use or daily	• Check the mower blade. • Check for loose hardware. • Check the parking-brake function. • Clean the grass build-up from under the deck. • Clean the discharge tunnel and plug. • Check the stopping time of the blade. The blade must stop within 3 seconds of releasing the blade-control bail; if it does not, contact an Authorized Service Dealer for repair.
Every 40 hours	• Check the condition of the belt(s). • Clean the wheels and gears.
Every 50 hours	• Check the blade drive system. • Remove debris from under the belt cover. • Clean under the belt cover.
Every 100 hours	• Tighten any loose fasteners.
Every 250 hours	• Change the transmission belt.

Periodic Maintenance

Note: Always remove the battery from the machine when troubleshooting, inspecting, maintaining, adjusting, or cleaning the machine.

Checking the Mower Blade

Service Interval: Before each use or daily

Always mow with a sharp blade. A sharp blade cuts cleanly and without tearing or shredding the grass blade.

1. Shut off the machine, wait for all moving parts to stop, and allow the machine to cool.
2. Remove the electric-start button and the battery pack from the machine.
3. Tip the lawn mower onto its left side.

⚠ WARNING

When servicing the blade, the blade can still move even though the power source is off. The blade is sharp; contacting the blade can result in serious personal injury.

- **Keep your hands and feet away from a moving blade.**
- **Wear gloves when servicing the blade.**

4. Inspect the blades for sharpness and wear, especially where the flat and the curved parts meet (see Figure 19). Because sand and abrasive material can wear away the metal that connects the flat and curved parts of the blade, check the blade before using the lawn mower. If you notice a slot or wear (Figure 19B and Figure 19C), replace the blade.

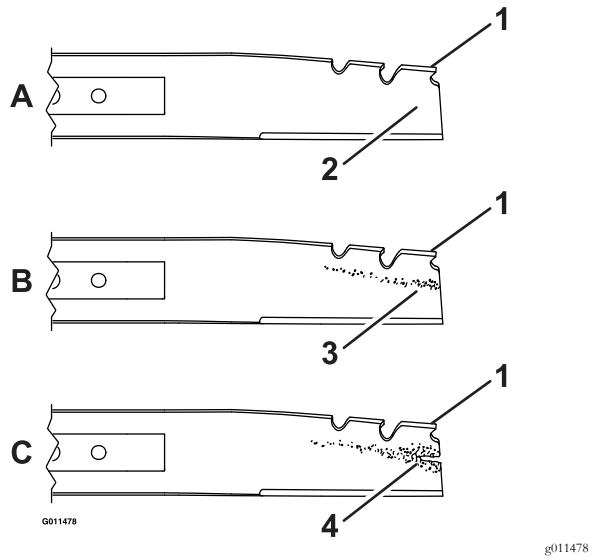

Figure 19

1. Sail
2. Flat
3. Wear
4. Slot

⚠ DANGER

A worn or damaged blade can break. A piece of the blade could be thrown into the operator's or bystander's area, resulting in serious personal injury or death.

- **Inspect the blade periodically for wear or damage.**
- **Replace a worn or damaged blade.**

⚠ WARNING

If you allow a blade to wear, a slot will form between the sail and flat part of the blade. Eventually a piece of the blade may break off and be thrown from under the housing, possibly resulting in serious injury to you or bystanders.

- **Inspect the blade periodically for wear or damage.**
- **Never try to straighten a blade that is bent or weld a broken or cracked blade.**
- **Replace a worn or damaged blade.**

Note: Maintain sharp blades throughout the cutting season, because sharp blades cut cleanly without tearing or shredding the grass blades. Tearing and shredding turns grass brown at the edges, which slows growth and increases the chance of disease.

- **Checking for Bent Blades:**

A. Rotate the blades until they are positioned as shown in

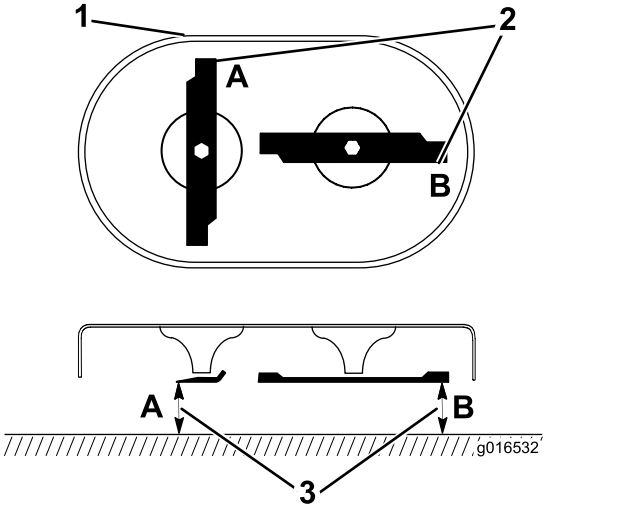

Figure 20

1. Front of cutting deck
2. Measure at locations A and B
3. Measure from the cutting edge to a smooth, level surface

B. Measure from a level surface to the cutting edges at locations **A** and **B**, (Figure 20), and record both dimensions.

C. Rotate the blades so that their opposite ends are at locations **A** and **B**.

D. Repeat the measurements in step B and record them.

Note: If the difference between dimensions **A** and **B** obtained in steps B and D exceeds 1/8 inch, replace the blades.

⚠ WARNING

A blade that is bent or damaged could break apart and could seriously injure or kill you or bystanders.

- **Always replace a bent or damaged blade with a new blade.**
- **Never file or create sharp notches in the edges or surfaces of a blade.**

- **Removing Mower Blades:**

Replace the blades when they strike a solid object, are out of balance, bent, or worn. Use only genuine Exmark replacement blades.

A. To remove the blade, use a block of wood to hold the blade steady. Make sure to grasp the end of the blade using a rag or thickly padded glove.

B. Remove the blade bolt, blade driver, and blade.

C. Inspect blades and sharpen or replace as required.

D. Inspect the pins on the blade driver for wear and damage or replace as required.

- **Installing Mower Blades:**

Important: ***You will need a torque wrench to install the blades properly.*** **If you do not have a torque wrench or are uncomfortable performing this procedure, contact an Authorized Service Dealer.**

⚠ WARNING

Incorrectly installing the blades could damage the machine or cause an injury to you or bystanders.

Install the blades according to the instructions.

A. Install the blade driver by inserting the raised area into the recess on the cutter housing.

B. Make sure to grasp the end of the blade using a rag or a thickly padded glove. Align the two holes on the blade with the two holes on the blade driver and install a sharp, balanced Exmark blade and blade bolt as shown in Figure 21. The sail of the blade must point toward the top of the lawn mower housing for proper installation.

Important: Position the curved ends of the blades to point toward the machine housing. Be sure to nest the raised areas on each blade driver with the recesses in the head of its corresponding spindle, and the pins on the other side of each blade driver with the holes in its corresponding blade.

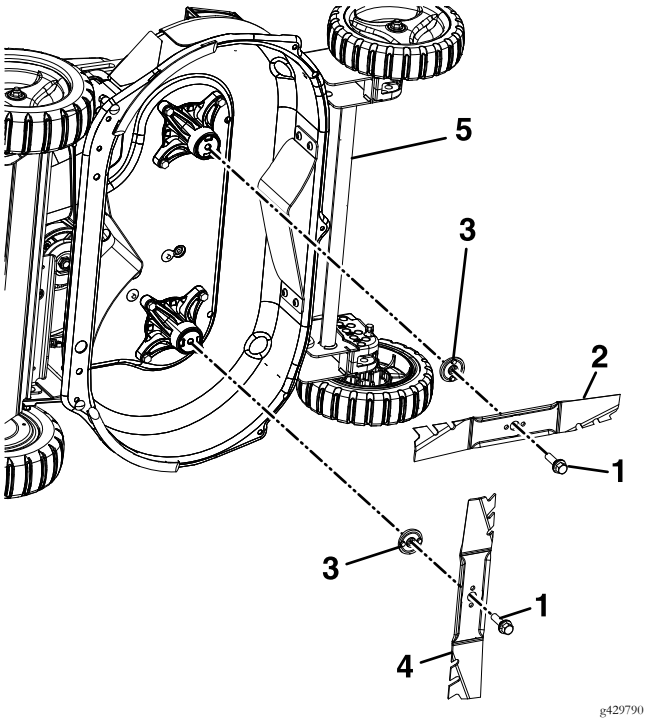

Figure 21

1. Blade bolt
2. Blade-vertical position
3. Blade driver
4. Blade-horizontal position
5. Front of deck

C. Torque the blade bolt to 60 ft-lb (82 N-m).

D. Referencing the front of the machine, make sure the installed blade is vertical before installing the second blade. The second blade must be installed perpendicular to the first, using steps A through C. The two blades will form a sideways "T" as shown in Figure 22.

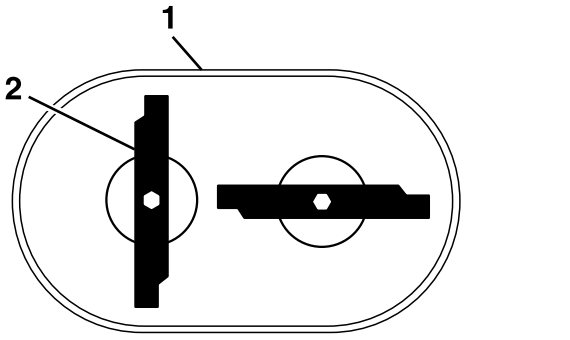

Figure 22

1. Front of deck
2. Blades form sideways "T"

E. Rotate the blades by hand a full 360 degree turn to ensure they Do Not touch.

F. If they touch, the blades are not mounted correctly. Repeat steps A through E. If the blades still touch after repeating the steps, contact an Authorized Service Dealer.

5. Return the lawn mower to its upright position.

Check for Loose Hardware

Service Interval: Before each use or daily

1. Shut off the machine, wait for all moving parts to stop, and allow the machine to cool.
2. Visually inspect machine for any loose hardware or any other possible problem. Tighten hardware or correct the problem before operating.

Check Condition Of Belt

Service Interval: Every 40 hours

1. Shut off the machine, wait for all moving parts to stop, and allow the machine to cool.
2. Remove the electric-start button and the battery pack from the machine.
3. Remove the belt cover to the lawn mower housing.
4. Check the belt for cracks, frayed edges, burn marks or any other damage.
5. Replace the damaged belt.

Check the Blade Drive System

Service Interval: After the first 5 hours

Every 50 hours—Check the blade drive system.

Every 50 hours—Remove debris from under the belt cover.

1. Shut off the machine, wait for all moving parts to stop, and allow the machine to cool.
2. Remove the electric-start button and the battery pack from the machine.
3. Remove and retain the belt access panel by rotating the screws a quarter-turn.

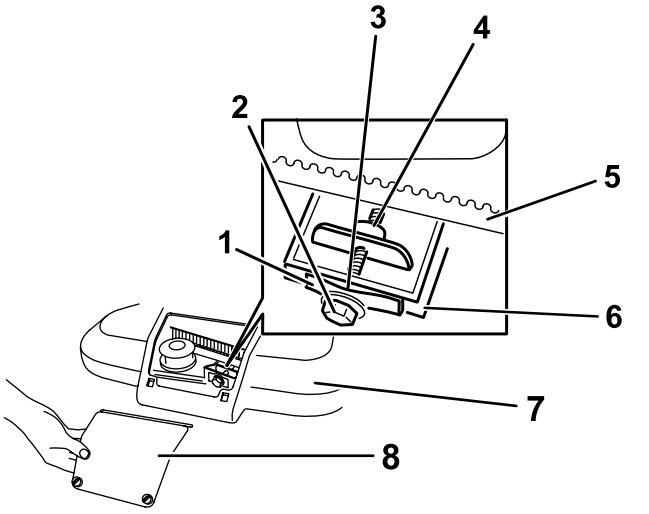

Figure 23

1. Belt-tension spring
2. Adjusting bolt
3. Gap
4. Adjusting nut
5. Blade-drive belt
6. Wall
7. Belt cover
8. Belt-cover-access panel

4. Brush out all the debris around the belt area.
5. Use a feeler gauge, a piece of paper, or a note card against the frame and slide it down behind the belt tension spring.

   The gap between the gauge and the spring should be .005-.030 inch (.13-.76 mm), tighten the adjusting bolt and nut until the paper barely slides freely in and out of the gap.

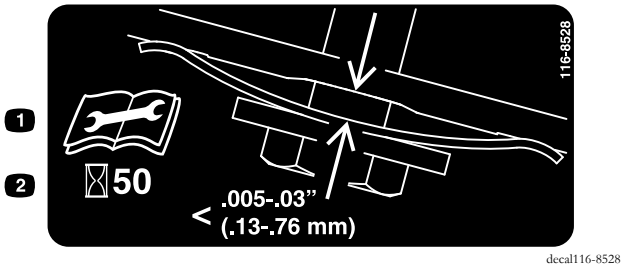

Figure 24

1. Read the *Operator's Manual* before performing any maintenance.
2. Check belt tension every 50 hours.

Important: Do Not overtighten the adjusting bolt. This could damage the blade drive belt.

6. Reinstall the belt access panel and rotate the screws a quarter-turn to lock into place.

Change Blade Drive Belt

Service Interval: As required

1. Shut off the machine, wait for all moving parts to stop, and allow the machine to cool.
2. Remove the electric-start button and the battery pack from the machine.
3. Remove and retain the front belt cover and its four bolts. Remove any debris under the cover.
4. Loosen the adjusting bolt.
5. Remove the blade drive belt.
6. Align the holes in the right and left sprockets with the holes in the deck as shown in Figure 25.

   Note: Hold the sprockets in place with a rod or a screwdriver.

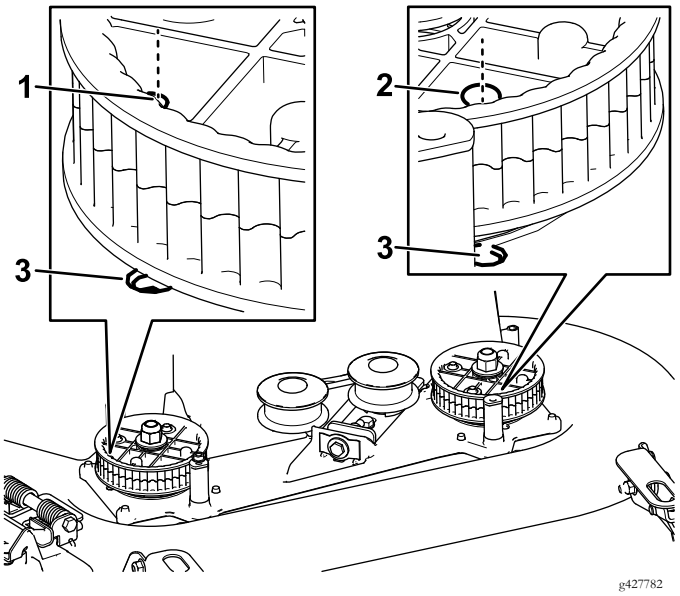

Figure 25

1. Right sprocket hole
2. Left sprocket hole
3. Hole in deck

7. When you have locked the sprockets in place, install the blade-drive belt.

   Note: Ensure that the teeth are engaged in the sprockets.
8. Tighten the belt tension to the recommended settings; refer to **Check the Blade Drive System**.
9. Remove the rod or screwdrivers from the sprockets.
10. Ensure that the blades under the housing are properly aligned; refer to **Check the Mower Blade** section.
11. Reinstall the belt cover using the four retained bolts.
12. Check the operation of the blade control lever.

Change Transmission Belt

Service Interval: Every 250 hours

1. Shut off the machine, wait for all moving parts to stop, and allow the machine to cool.
2. Remove the electric-start button and the battery pack from the machine.
3. Remove the four bolts that hold the belt cover to the machine housing.

   Note: Save the bolts for installing the belt cover to the machine housing.
4. Remove the belt cover.
5. Remove any debris from under the belt cover.
6. If the grass bag is on the machine, remove and retain it.
7. Raise and hold up the rear door.
8. Remove and retain the rear panel and its mounting hardware.

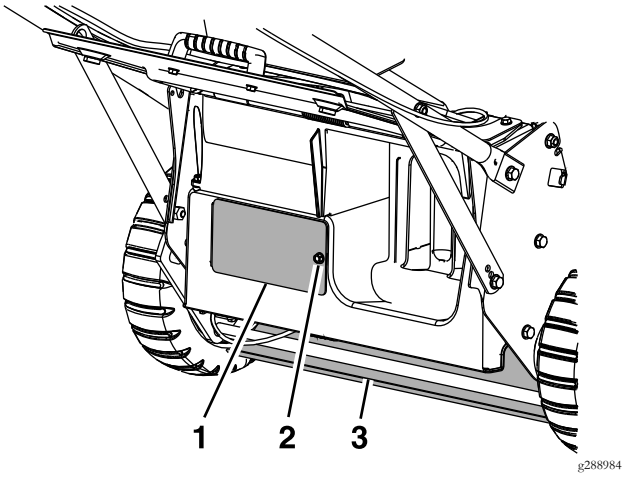

Figure 26

1. Rear panel
2. Hardware
3. Dust shield

9. Remove and retain the dust shield and its mounting hardware.
10. Remove the transmission belt.
    A. Rotate the idler pulley over the access hole on the transmission by using a socket wrench to turn the idler pulley nut.

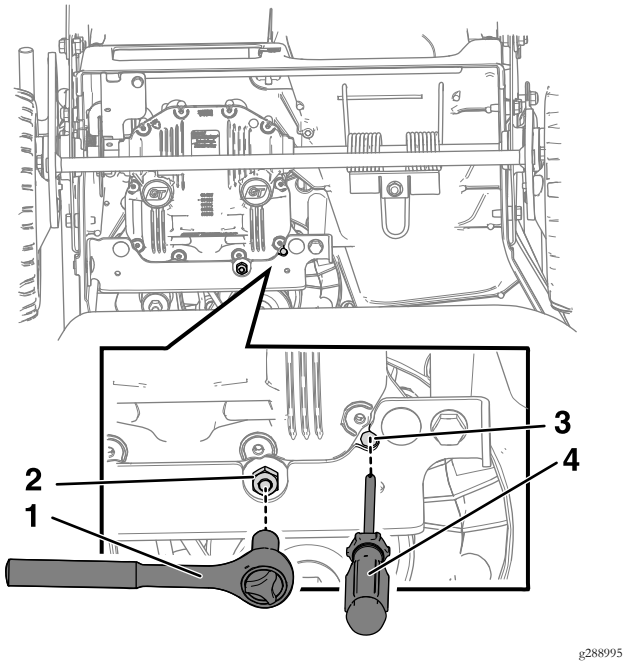

Figure 27

1. Socket wrench
2. Idler pulley nut
3. Idler pulley nut
4. Screwdriver

B. While you are holding the idler pulley over the access hole on the transmission, insert a screwdriver through the access hole to catch a rib on the idler pulley.

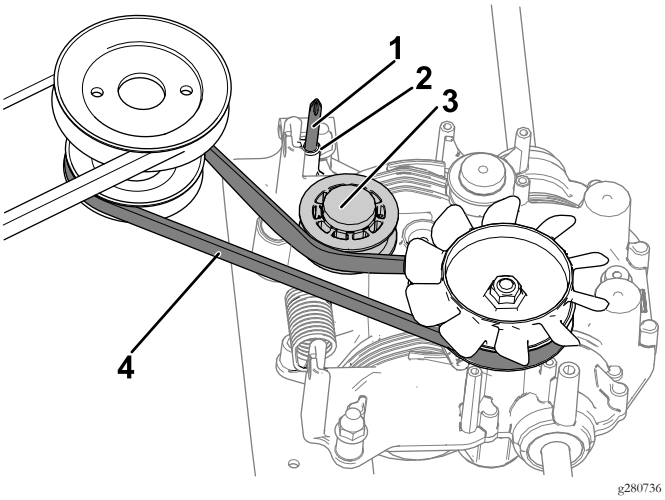

Figure 28

1. Screwdriver through access hole
2. Access hole
3. Idler pulley
4. Transmission belt

C. Use the screwdriver to hold the idler pulley out of the way until you are done installing the new transmission belt.

D. From the front of the machine, remove the belt from the motor pulley and then remove from the transmission pulley.

E. While the idler pulley is pulled out of the way, install the new transmission belt placing the belt over the transmission pulley first and then over the motor pulley.

F. Using a socket wrench to hold the idler pulley in position, remove the screwdriver from the access hole in the transmission and return the idler pulley to its tensioned position.

11. Ensure that the new transmission belt is positioned correctly.
12. Reinstall the rear panel and secure with its mounting hardware retained in step 8.

Adjustments

Note: Wait for all moving parts to stop and remove the battery pack before servicing, cleaning, or making any adjustments to the machine.

Adjusting the Self-Propel Drive

If the lawn mower does not self-propel or has a tendency to creep forward when the control bail is released, adjust the self-propel drive.

1. Shut off the machine, wait for all moving parts to stop, and allow the machine to cool.
2. Remove the electric start button and the battery pack from the machine.
3. Turn the adjustment nut counterclockwise to loosen the cable adjustment.

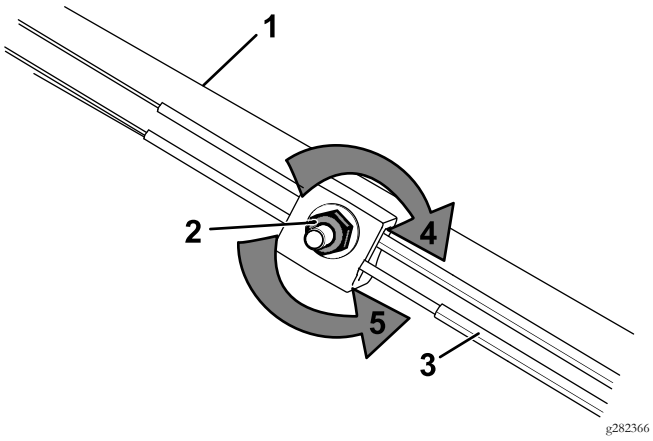

Figure 29

1. Handle (left side)
2. Adjustment nut
3. Self-propel-drive cable
4. Turn the nut clockwise to tighten the adjustment.
5. Turn the nut counterclockwise to loosen the adjustment.

4. Adjust the tension on the cable by pulling it back or pushing it forward and holding that position.

   Note: Push the cable toward the motor to increase the traction; pull the cable away from the motor to decrease the traction.

5. Turn the adjustment nut clockwise to tighten the cable adjustment.

   Note: Tighten the nut firmly with a socket or wrench.

Adjusting the Parking-Brake Cable

Whenever you install a new parking-brake cable or if the parking brake is out of adjustment, adjust the parking-brake cable.

1. Disengage the parking brake.
2. Turn the adjustment nut counterclockwise to loosen the cable adjustment (Figure 30).

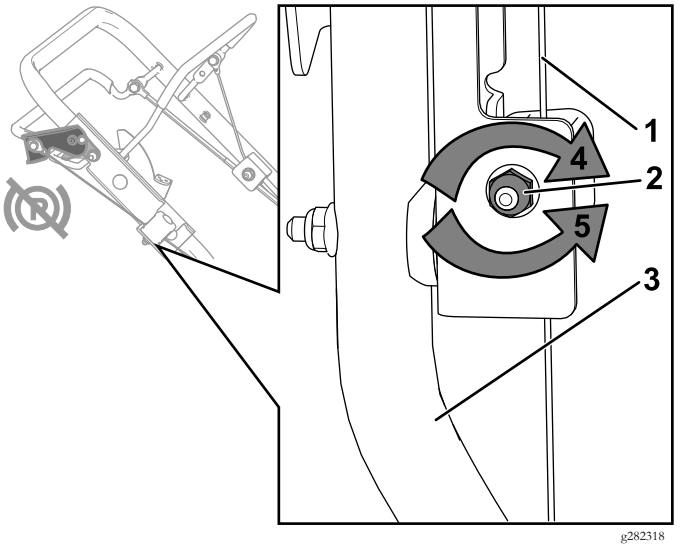

Figure 30

1. Parking-brake cable
2. Adjustment nut
3. Handle (right side)
4. Turn the nut clockwise to tighten the adjustment.
5. Turn the nut counterclockwise to loosen the adjustment.

3. Adjust the tension on the cable (Figure 30) by pulling or pushing the cable jacket and holding that position.

   Note: Pull the cable jacket toward the motor to increase tension (also increases brake clamp load); push the cable jacket away from the motor to decrease tension (also decreases brake clamp load).

   Important: Adjust the cable jacket in small increments to avoid over tensioning. Over tensioning may cause the machine to not roll free even when the parking brake is disengaged. Correct tensioning allows the machine to roll free when the parking brake

is disengaged and to hold position when the parking brake is engaged.

4. Turn the adjustment nut clockwise to tighten the cable adjustment.

   Note: Tighten the nut firmly with a socket or wrench.

Cleaning

⚠ WARNING

The machine may dislodge material from under the machine.

- **Wear eye protection.**
- **Stay in the operating position (behind the handle) when the motor is running.**
- **Do not allow bystanders in the area.**

Clean Grass Build-Up Under Deck

Service Interval: Before each use or daily

For optimal cutting performance, keep the underside of the machine housing clean. Scrape the clippings away from under the machine housing.

1. Shut off the machine, wait for all moving parts to stop, and allow the machine to cool.
2. Remove the electric start button and the battery pack from the machine.
3. Tip the lawn mower onto its left side.
4. Remove the dirt and grass clippings with a scraper. Avoid contacting any burrs or sharp edges.
5. Return the machine to the operating position.

Cleaning the Discharge Tunnel and Plug

Service Interval: Before each use or daily

Always be sure that the discharge tunnel door closes securely when you release the handle. If the debris prevents the discharge door from closing securely, clean the inside of the discharge tunnel and the door thoroughly.

Do not operate the machine unless one of the following is true:

- Mulch Mode:
  - The discharge tunnel plug is locked securely in the discharge tunnel.
  - The side discharge cover is locked in place.
  - The discharge tunnel door is closed against frame.
- Bag Mode:
  - The discharge tunnel plug is removed.

  - The grass bag is locked in place.
  - The discharge tunnel door is closed against bag.
  - The side discharge cover is locked in place.
- Side Discharge Mode:
  - The discharge tunnel plug is locked securely in the discharge tunnel.
  - The discharge tunnel door is closed against frame.
  - The side discharge deflector is locked in place.

Cleaning Under the Belt Cover

Service Interval: Every 50 hours

1. Shut off the machine, wait for all moving parts to stop, and allow the machine to cool.
2. Remove the electric-start button and battery pack from the machine.
3. Pull upward on the back of the cover to unsnap the front and back cover tabs.
4. Lift off the cover and brush out all the debris around the belt area.
5. Install the belt cover by pushing down on the rear first and then snapping the front onto the mower housing.

Cleaning the Wheels

Service Interval: Every 40 hours

1. Shut off the machine, wait for all moving parts to stop, and allow the machine to cool.
2. Remove the rear wheels and clean any debris from the wheel gear area.

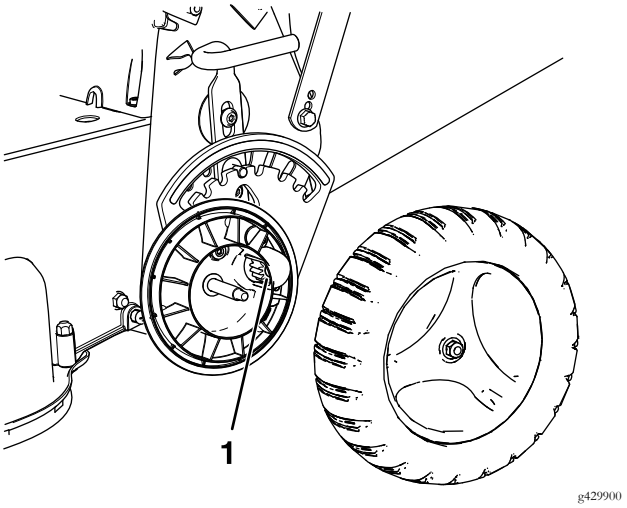

Figure 31

1. Gear

3. After cleaning, apply a small amount of anti-seize to the gears.

Note: If you are operating the machine in extreme conditions, cleaning the wheels more frequently than recommended will result in increased gear life.

Note: To prevent damage to the bearing seals, do not use a high-pressure water sprayer on the bearings.

Storage

Important: Store the machine, battery pack, and charger only in temperatures that are within the appropriate range; refer to the Specifications section.

Important: If you are storing the battery pack for the off-season, charge it until 2 or 3 LED indicators turn green on the battery. Do not store a fully charged or fully depleted battery. When you are ready to use the machine again, charge the battery pack until the left indicator light turns green on the charger or all 4 LED indicators turn green on the battery.

- Disconnect the product from the power supply (i.e., remove the battery pack and electric-start button) and check for damage after use.
- Do not store the machine or charger with the battery pack installed.
- Clean all foreign material from the product.
- When not in use, store the machine, electric-start button, battery pack, and battery charger out of the reach of children.
- Keep the machine, battery pack, and battery charger away from corrosive agents, such as garden chemicals and de-icing salts.
- To reduce the risk of serious personal injury, do not store the battery pack outside or in vehicles.
- Store the machine, battery pack, and battery charger in an enclosed clean, dry area.

Preparing the Battery Pack for Recycling

Important: Upon removal, cover the terminals of the battery pack with heavy-duty adhesive tape. Do not attempt to destroy or disassemble the battery pack or remove any of its components.

	Lithium-ion battery packs labeled with the Call2Recycle seal can be recycled at any participating retailer or battery recycling facility in the Call2Recycle program (US and Canada only). To locate a participating retailer or facility closest to you, please call 1-800-822-8837 or visit www.call2recycle.org. If you cannot locate a participating retailer or facility nearby, or if your rechargeable battery is not labeled with the Call2Recycle seal, please contact Exmark Customer Care at (402)-223-6375 or your local municipality for more information on how to responsibly recycle the battery.

Troubleshooting

Perform only the steps described in these instructions. All further inspection, maintenance, and repair work must be performed by an authorized service center or a similarly qualified specialist if you cannot solve the problem yourself.

Problem	Possible Cause	Corrective Action
The machine does not start.	1. The battery is not fully installed in the machine. 2. The battery pack is not charged. 3. The battery pack is damaged. 4. There is another electrical problem with the machine.	1. Remove and then replace the battery into the machine, making sure that it is fully installed and latched. 2. Remove the battery pack from the machine and charge it. 3. Replace the battery pack. 4. Contact an Authorized Service Dealer.
The machine does not run or does not run continuously.	1. There is moisture on the leads of the battery pack. 2. The battery is not fully installed into the tool.	1. Allow the battery pack to dry or wipe it dry. 2. Remove and then replace the battery into the tool making sure that it is fully installed and latched.
The machine does not reach full power.	1. The battery pack charge capacity is too low. 2. The battery air vents are blocked.	1. Remove the battery pack from the machine and fully charge the battery pack. 2. Clean the air vents.
The battery pack loses charge quickly.	1. The battery pack is over or under the appropriate temperature range. 2. The machine is overloaded	1. Move the battery pack to a place where it is dry and the temperature is between 5°C (41°F) and 40°C (104°F). 2. Cut the grass at a higher height of cut or walk at a slower pace while mowing.
The battery charger is not working.	1. The battery charger is over or under the appropriate temperature range. 2. The outlet that the battery charger is plugged into does not have power.	1. Unplug the battery charger and move it to a place where it is dry and the temperature is between 5°C (41°F) and 40°C (104°F). 2. Contact your licensed electrician to repair the outlet.
The machine does not self-propel.	1. The self-propel drive cable is out of adjustment or is damaged.	1. Adjust the self-propel drive cable. Replace the cable if necessary.
The LED indicator light on the battery charger is red.	1. The battery charger and/or battery pack is over or under the appropriate temperature range.	1. Unplug the battery charger and move the battery charger and battery pack to a place where it is dry and the temperature is between 5°C (41°F) and 40°C (104°F).
The LED indicator light on the battery charger is blinking red.	1. There is an error in the communication between the battery pack and the charger. 2. The battery pack is weak.	1. Remove the battery pack from the battery charger, unplug the battery charger from the outlet, and wait 10 seconds. Plug the battery charger into the outlet again and place the battery pack on the battery charger. If the LED indicator light on the battery charger is still blinking red, repeat this procedure again. If the LED indicator light on the battery charger is still blinking red after 2 attempts, properly dispose of the battery pack at a battery recycling facility. 2. Contact an Authorized Service Dealer if the battery is in warranty, or properly dispose of the battery pack at a battery recycling facility.

Troubleshooting

Problem	Possible Cause	Corrective Action
The machine is producing a beeping sound.	1. The battery pack is not charged. 2. The machine is in an unsafe position for operation. 3. The machine is overloaded. 4. There is another electrical problem with the machine.	1. Remove the battery pack from the machine and charge it. 2. Ensure that the machine is not at an extreme angle while operating. 3. Cut the grass at a higher height of cut or walk at a slower pace while mowing. 4. Attempt the other troubleshooting actions, if the alarm still sounds, contact an Authorized Service Dealer.
The quality of cut is decreased or unsatisfactory.	1. The blade is dull. 2. The cutting deck has debris buildup.	1. Have the blade sharpened or replaced. 2. Clean under the machine.
The bagging is decreased or unsatisfactory.	1. The machine is overloaded. 2. The bag has debris buildup.	1. Cut the grass at a higher height of cut. 2. Clean the inside of the bag of any dust or debris.
The machine is cutting unevenly.	1. The blade is dull. 2. The cutting deck is damaged.	1. Have the blade sharpened or replaced. 2. Contact an Authorized Service Dealer.
The machine is vibrating.	1. The blade is bent or damaged.	1. Inspect the blade and replace if necessary.

California Proposition 65 Warning Information

What is this warning?

You may see a product for sale that has a warning label like the following:



WARNING: Cancer and Reproductive Harm—www.p65Warnings.ca.gov.

What is Prop 65?

Prop 65 applies to any company operating in California, selling products in California, or manufacturing products that may be sold in or brought into California. It mandates that the Governor of California maintain and publish a list of chemicals known to cause cancer, birth defects, and/or other reproductive harm. The list, which is updated annually, includes hundreds of chemicals found in many everyday items. The purpose of Prop 65 is to inform the public about exposure to these chemicals.

Prop 65 does not ban the sale of products containing these chemicals but instead requires warnings on any product, product packaging, or literature with the product. Moreover, a Prop 65 warning does not mean that a product is in violation of any product safety standards or requirements. In fact, the California government has clarified that a Prop 65 warning "is not the same as a regulatory decision that a product is 'safe' or 'unsafe.'" Many of these chemicals have been used in everyday products for years without documented harm. For more information, go to https://oag.ca.gov/prop65/faqs-view-all.

A Prop 65 warning means that a company has either (1) evaluated the exposure and has concluded that it exceeds the "no significant risk level"; or (2) has chosen to provide a warning based on its understanding about the presence of a listed chemical without attempting to evaluate the exposure.

Does this law apply everywhere?

Prop 65 warnings are required under California law only. These warnings are seen throughout California in a wide range of settings, including but not limited to restaurants, grocery stores, hotels, schools, and hospitals, and on a wide variety of products. Additionally, some online and mail order retailers provide Prop 65 warnings on their websites or in catalogs.

How do the California warnings compare to federal limits?

Prop 65 standards are often more stringent than federal and international standards. There are various substances that require a Prop 65 warning at levels that are far lower than federal action limits. For example, the Prop 65 standard for warnings for lead is 0.5 µg/day, which is well below the federal and international standards.

Why don't all similar products carry the warning?

- Products sold in California require Prop 65 labelling while similar products sold elsewhere do not.
- A company involved in a Prop 65 lawsuit reaching a settlement may be required to use Prop 65 warnings for its products, but other companies making similar products may have no such requirement.
- The enforcement of Prop 65 is inconsistent.
- Companies may elect not to provide warnings because they conclude that they are not required to do so under Prop 65; a lack of warnings for a product does not mean that the product is free of listed chemicals at similar levels.

Why does Exmark include this warning?

Exmark has chosen to provide consumers with as much information as possible so that they can make informed decisions about the products they buy and use. Exmark provides warnings in certain cases based on its knowledge of the presence of one or more listed chemicals without evaluating the level of exposure, as not all the listed chemicals provide exposure limit requirements. While the exposure from Exmark products may be negligible or well within the "no significant risk" range, out of an abundance of caution, Exmark has elected to provide the Prop 65 warnings. Moreover, if Exmark does not provide these warnings, it could be sued by the State of California or by private parties seeking to enforce Prop 65 and subject to substantial penalties.

EXMARK ACCESSORIES AND OPTIONS*

MID-MOUNT RIDING ACCESSORIES AND OPTIONS

CUSTOM RIDE SEAT SUSPENSION SYSTEM
FULL SUSPENSION SEAT
DECK LIFT ASSIST KIT
HITCH KIT
LIGHT KIT
12V POWER PORT
MICRO-MULCH SYSTEM
OPERATOR CONTROLLED DISCHARGE
SUN SHADE
TRASH CONTAINER
TURF STRIPER
ULTRA VAC COLLECTION SYSTEM
ULTRA VAC QUICK DISPOSAL SYSTEM

OUT-FRONT RIDING ACCESSORIES AND OPTIONS

CUSTOM RIDE SEAT SUSPENSION SYSTEM
DUAL-TAIL WHEEL
FLOOR PAN EXTENDER
HITCH KIT
LIGHT KIT
MICRO-MULCH SYSTEM
ROLL OVER PROTECTION SYSTEM (ROPS)
SNOW BLADE
SNOWBLOWER
SUN SHADE
TRASH CONTAINER
ULTRA VAC COLLECTION SYSTEM
ULTRA VAC QUICK DISPOSAL SYSTEM
WEATHER CAB

WALK-BEHIND ACCESSORIES AND OPTIONS

GRASS CATCHER
MICRO-MULCH SYSTEM
TURF STRIPER
STANDON

*Some accessories and options not available for some models.

Place Model No. and Serial No. Label Here (Included in the Literature Pack) or Fill in Below

Model No. _____

Serial No. _____

Date Purchased _____

Engine Model No. and Spec. No. _____

Engine Serial No. (E/No) _____

©2024 Exmark Mfg. Co., Inc.
415 Industrial Row
Beatrice, NE 68310
All Rights Reserved

Part No. 4506-724 Rev. B
(402) 223-6300
Printed in Mexico



www.exmark.com