Form No. 3461-413 Rev A

Mounting Bracket Kit

Revolution 60V 6-Pod Battery Charger

Model No. 147-1880

Installation Instructions

Installing the Mounting Bracket

Install the mounting bracket indoors (such as a garage or other dry place), near a power outlet, and out of the reach of children.

1. Secure the mounting bracket in place using the appropriate hardware in the pre-drilled holes (hardware not included).

   Note: You can install the mounting bracket so that the charger and batteries stand upright or lie flat.

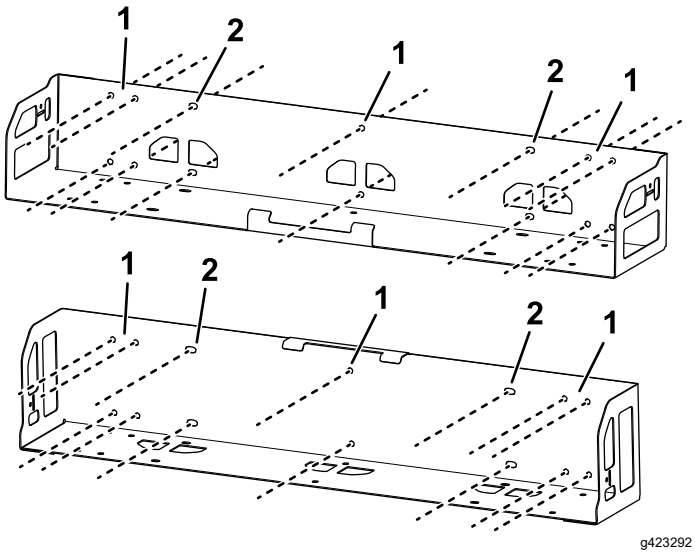

Figure 1

1. 41 cm (16 inches) spacing between holes
2. 61 cm (24 inches) spacing between holes

2. Thread the power cable through the side of the mounting bracket and tilt the top of the charger so that it fits underneath the mounting bracket tabs (Figure 2).

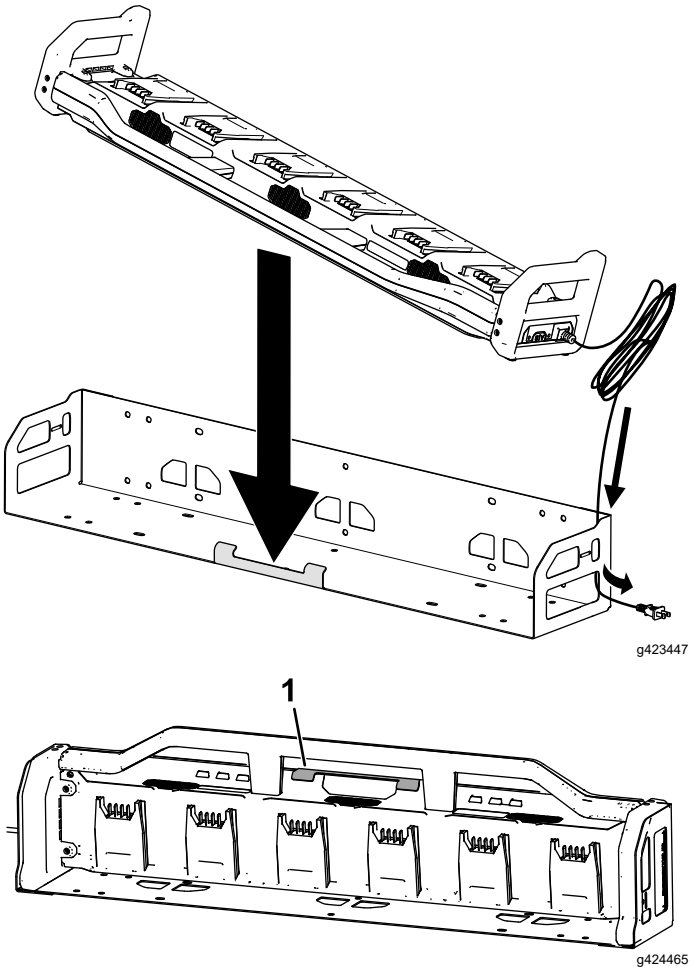

Figure 2

1. Mounting bracket tabs

© 2023—The Toro® Company
8111 Lyndale Avenue South
Bloomington, MN 55420

Register at www.Toro.com.

Original Instructions (EN)
Printed in the USA
All Rights Reserved

3461-413

3. Secure the charger to the bracket using the straps as shown in Figure 3.
   A. Loop the strap through the slot in the bracket.
   B. Loop the strap around the charger handle and back through the buckle of the strap.
   C. Secure the strap to itself.

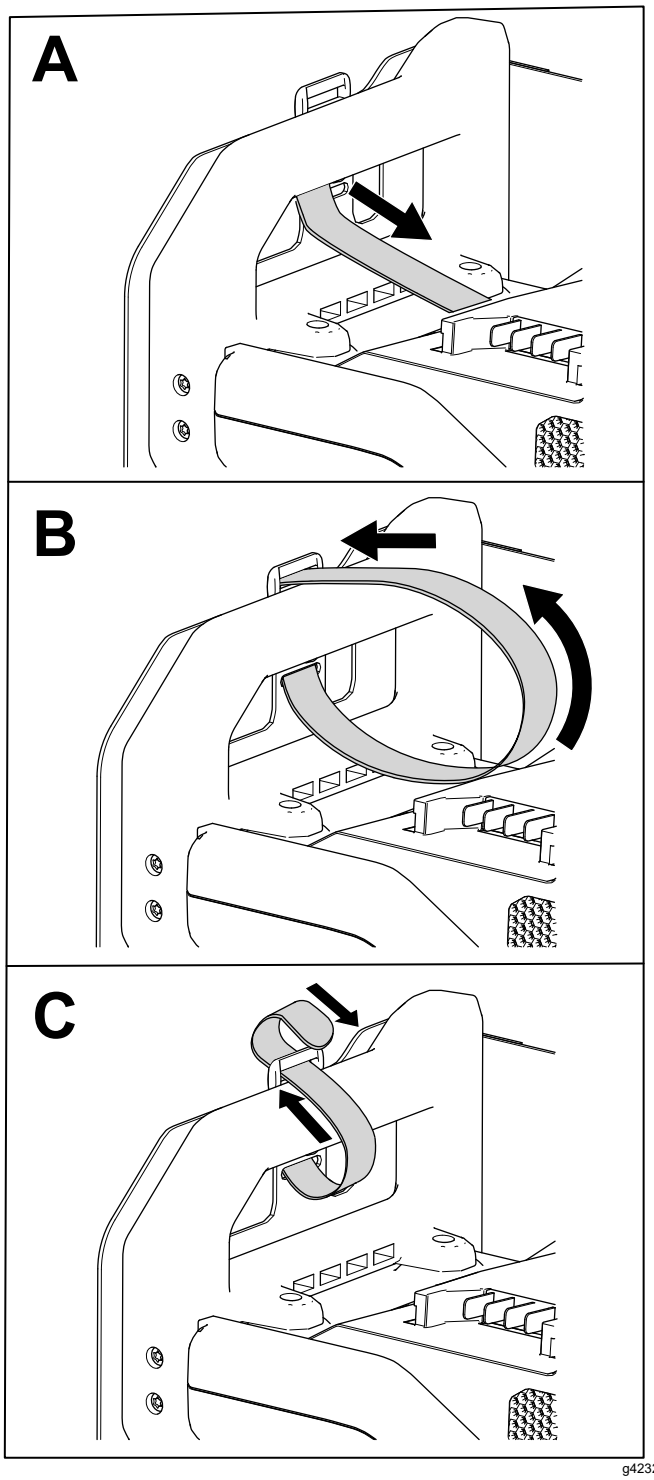

g423295

Figure 3

4. Repeat step 3 to secure the other side of the charger.