Operator's Manual

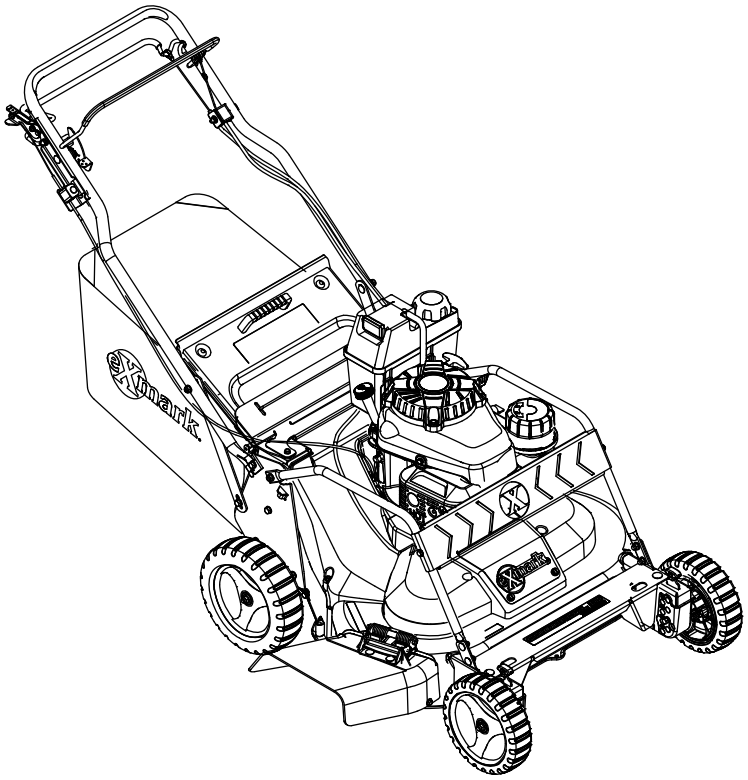

COMMERCIAL 30

For Serial Nos.
417,930,746 & Higher

Part No. 4507-783 Rev. B

⚠ WARNING

CALIFORNIA
Proposition 65 Warning

The engine exhaust from this product contains chemicals known to the State of California to cause cancer, birth defects, or other reproductive harm.

Use of this product may cause exposure to chemicals known to the State of California to cause cancer, birth defects, or other reproductive harm.

Important: **It is a violation of California Public Resource Code Section 4442 or 4443 to use or operate the engine on any forest-covered, brush-covered, or grass-covered land unless the engine is equipped with a spark arrester, as defined in Section 4442, maintained in effective working order or the engine is constructed, equipped, and maintained for the prevention of fire.**

To acquire a spark arrester for your unit, see your Engine Service Dealer.

For all models that do not have Exmark engines, please refer to the engine manufacturer's information included with the machine.

For models with Exmark engines, refer to this manual for information.

The gross or net horsepower (or torque) of this engine was laboratory rated by the engine manufacturer in accordance with the Society of Automotive Engineers (SAE) J1940 or J2723. As configured to meet safety, emission, and operating requirements, the actual engine horsepower (or torque) on this class of mower will be significantly lower.

©2025 Exmark Mfg. Co., Inc.
415 Industrial Row
Beatrice, NE 68310

Contact us at www.Exmark.com.
Printed in Mexico
All Rights Reserved

Introduction

CONGRATULATIONS on the purchase of your Exmark Mower. This product has been carefully designed and manufactured to give you a maximum amount of dependability and years of trouble-free operation.

This rotary-blade, walk-behind lawnmower is intended to be used by professional, hired operators. It is designed primarily for cutting grass on well-maintained lawns on residential or commercial properties. Using this product for purposes other than its intended use could prove dangerous to you and bystanders.

This manual contains operating, maintenance, adjustment, and safety instructions for your Exmark mower.

BEFORE OPERATING YOUR MOWER, CAREFULLY READ THIS MANUAL IN ITS ENTIRETY.

By following the operating, maintenance, and safety instructions, you will prolong the life of your mower, maintain its maximum efficiency, and promote safe operation.

To maximize safety, performance, and proper operation of this machine, it is essential that all operators carefully read and fully understand the contents of the Operator's manual provided with the product. Failure to comply with the operating instructions or receive proper training may result in injury. Go to https://www.Exmark.com for additional safe operation information, such as safety tips, training materials, and Operator's manuals.

If additional information is needed, or should you require trained mechanic service, contact your authorized Exmark equipment dealer or distributor.

All Exmark equipment dealers and distributors are kept informed of the latest methods of servicing and are equipped to provide prompt and efficient service in the field or at their service stations. They carry ample stock of service parts or can secure them promptly for you from the factory.

All Exmark parts are thoroughly tested and inspected before leaving the factory, however, attention is required on your part if you are to obtain the fullest measure of satisfaction and performance.

Whenever you need service, genuine Exmark parts, or additional information, contact an Authorized Service Dealer or Exmark Customer Service and have the model and serial numbers of your product ready.

Figure 1 identifies the location of the model and serial numbers on the product. Write the numbers in the space provided.

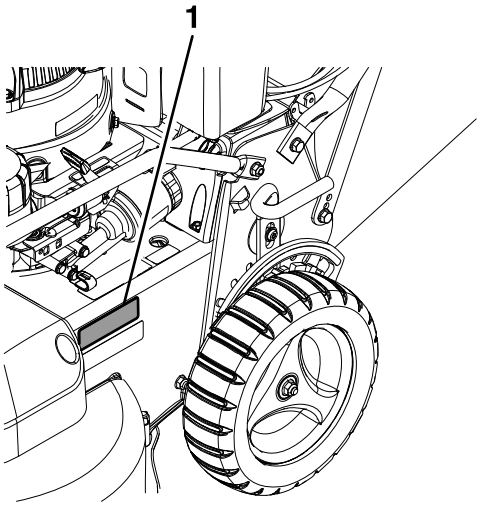

g459509

Figure 1

1. Model and serial number location

Model No. _____

Serial No. _____

For complete warranty details, see https://www.Exmark.com. You may also call us 402-223-6375 to request a written copy of the product's warranty.

Contents

Introduction 3
Safety 5
Safety Alert Symbol 5
General Safety 5
Safety and Instructional Decals 6
Specifications 9
Systems 9
Dimensions 9
Product Overview 10
Operation 10
Controls 10
Before Operation 12
Operating Instructions 13
During Operation Safety 13
After Operation 22
Maintenance 23
Maintenance Safety 23
Recommended Maintenance Schedule(s) 23
Periodic Maintenance 24
Engine Maintenance 24
Engine Safety 24
Check Engine Oil Level 24
Check the Mower Blade 24
Check the Blade Brake Clutch 26
Check for Loose Hardware 26
Check Air Filter 26
Service Air Filter 27
Change Engine Oil 27
Change Oil Filter 27
Check Condition Of Belts 28
Check the Blade Drive System 28
Change Blade Brake Clutch (BBC) Belt 29
Change Transmission Belt 30
Check Spark Plugs 31
Emptying the Fuel Tank and Cleaning the Fuel Filter 31
Adjustments 32
Adjusting the Self-Propel Drive 32
Adjusting the Blade Brake Cable 32
Adjusting the Parking-Brake Cable—If Equipped 33
Cleaning 34
Cleaning and Storing Safety 34
Clean Engine and Exhaust System Area 34
Clean Grass Build-Up Under Deck 34
Cleaning the Discharge Tunnel and Plug 35
Cleaning Under the Belt Access Panel 35
Clean Debris From Machine 35
Waste Disposal 36
Storage 37
Preparing the Fuel System 37
Preparing the Engine 37
General Storage Information 37
Removing the Lawn Mower from Storage 37
Troubleshooting 38
California Proposition 65 Warning Information 40

Safety

Safety Alert Symbol

This Safety Alert Symbol (Figure 2) is used both in this manual and on the machine to identify important safety messages which must be followed to avoid accidents.

This symbol means: **ATTENTION! BECOME ALERT! YOUR SAFETY IS INVOLVED!**



g000502

Figure 2
Safety Alert Symbol

The safety alert symbol appears above information which alerts you to unsafe actions or situations and will be followed by the word **DANGER**, **WARNING**, or **CAUTION**.

DANGER: Indicates an imminently hazardous situation which, if not avoided, **Will** result in death or serious injury.

WARNING: Indicates a potentially hazardous situation which, if not avoided, **Could** result in death or serious injury.

CAUTION: Indicates a potentially hazardous situation which, if not avoided, **May** result in minor or moderate injury.

This manual uses two other words to highlight information. **Important** calls attention to special mechanical information and **Note** emphasizes general information worthy of special attention.

General Safety

This machine is capable of amputating hands and feet and of throwing objects. Always follow all safety instructions to avoid serious personal injury or death.

- Read, understand, and follow all instructions and warnings in the Operator's Manual and on the machine, engine, and attachments. All operators and mechanics should be trained. If the operator(s) or mechanic(s) can not read this manual, it is the owner's responsibility to explain this material to them; other languages may be available on our website.
- Only allow trained, responsible, and physically capable operators that are familiar with the safe operation, operator controls, and safety signs and instructions to operate the machine. Never let children or untrained people operate or service the equipment. Local regulations may restrict the age of the operator.
- Do Not operate the machine near drop-offs, ditches, embankments, water, or other hazards.
- Keep bystanders and children out of the operating area.
- Do Not put your hands or feet near moving parts.
- Do not operate the machine without all safety shields, guards, switches, and other devices in place and in proper working condition.
- Park machine on level ground, set parking brake (if equipped), stop engine, and disconnect spark plug wire. Wait for all moving parts to stop before leaving the operator's position. Allow the machine to cool before servicing, adjusting, fueling, cleaning, or storing.

Safety and Instructional Decals

- Keep all safety signs legible. Remove all grease, dirt and debris from safety signs and instructional labels.
- Replace all worn, damaged, or missing safety signs.
- When replacement components are installed, be sure that current safety signs are affixed to the replaced components.
- If an attachment or accessory has been installed, make sure current safety signs are visible.
- New safety signs may be obtained from your authorized Exmark equipment dealer or distributor or from Exmark Mfg. Co. Inc.
- Safety signs may be affixed by peeling off the backing to expose the adhesive surface. Apply only to a clean, dry surface. Smooth to remove any air bubbles.
- Familiarize yourself with the following safety signs and instruction labels. They are critical to the safe operation of your Exmark commercial mower.



decal93-7009

93-7009

1. Warning—do not operate the mower with the deflector up or removed; keep the deflector in place.
2. Cutting/dismemberment hazard of hand or foot, mower blade—stay away from moving parts.



decal94-8072

94-8072

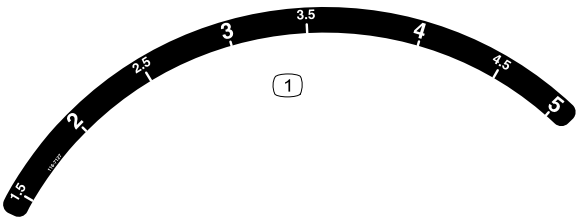

decal116-7127

116-7127

1. Height of cut

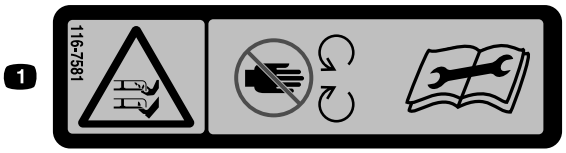

decal116-7581

116-7581

All Models Except CS

1. Cutting/dismemberment hazard of hand or foot, mower blade-stay away from moving parts. Read the *Operator's Manual* before adjusting servicing, or cleaning.

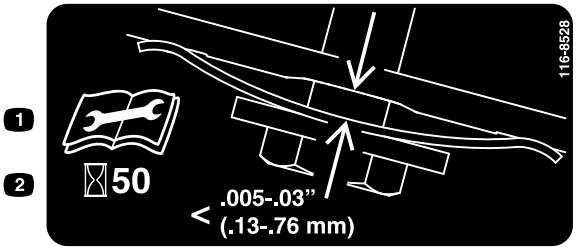

decal116-8528

116-8528

1. Read the Operator's manual before performing any maintenance.
2. Check belt tension every 50 hours.



decal116-9313

116-9313

1. Read the *Operator's Manual*.
2. Fire hazard
3. Toxic gas inhalation hazard
4. Hot surface; burn hazard



decal120-9570

120-9570

1. Warning—stay away from moving parts, keep all guards and shields in place.

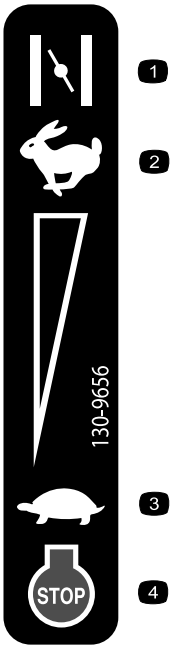

decal130-9656

130-9656

1. Choke
2. Fast
3. Slow
4. Engine—stop



decal133-8062

133-8062

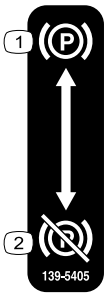

decal139-5405

139-5405

All Models Except CS

1. Parking brake—engage
2. Parking brake—disengage

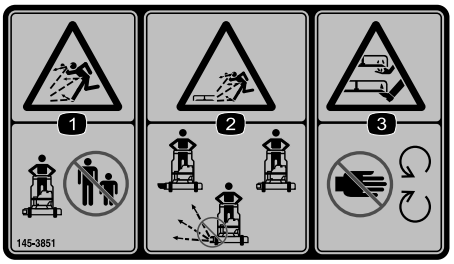

decal145-3851

145-3851

1. Thrown object hazard—keep bystanders away
2. Thrown object hazard from discharge chute—Do not operate the machine without the side-discharge plug, chute, or deflector in place.
3. Cutting/dismemberment hazard of hand or foot, mower blade—stay away from moving parts.

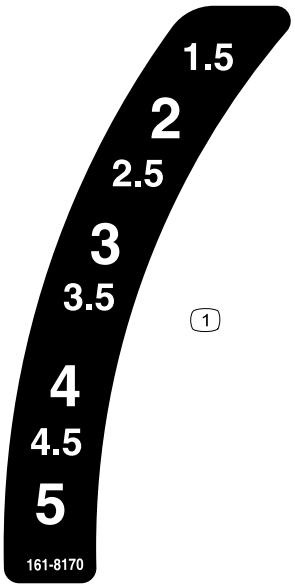

decal161-8170

161-8170
CS Models Only

1. Height of cut



decal116-7583

116-7583

1. Warning—read the *Operator's Manual*; do not operate this machine unless you are trained.
2. Thrown object hazard—keep bystanders away.
3. Thrown object hazard—do not operate the mower without the rear discharge plug or bag in place.
4. Cutting/dismemberment hazard of hand or foot, mower blade—stay away from moving parts; keep all guards in place.
5. Warning—wear hearing protection.
6. Cutting/dismemberment hazard of hand or foot, mower blade—do not operate up and down slopes; operate side to side on slopes; shut off the engine before leaving the machine; pick up any debris before mowing; look behind you when moving in reverse.

Specifications

Systems

Engine

- Engine Specifications: See your Engine Owner's Manual
- Engine Oil Type: Exmark 4–Cycle Premium Engine Oil
- RPM: 3500 RPM (No Load)

Fuel System

- Capacity: 1 gallon (3.8 L)
- Fuel Recommendations:
  - For best results, use only clean, fresh, unleaded gasoline with an octane rating of 87 or higher ((R+M)/2 rating method).
  - Oxygenated fuel with up to 10% ethanol or 15% MTBE by volume is acceptable.
  - **Do Not** use ethanol blends of gasoline (such as E15 or E85) with more than 10% ethanol by volume. Performance problems and/or engine damage may result which may not be covered under warranty.
  - **Do Not** use gasoline containing methanol.
  - **Do Not** store fuel either in the fuel tank or fuel containers over the winter unless a fuel stabilizer is used.
  - **Do Not** add oil to gasoline.
- Fuel Filter: Replaceable In-line
- Fuel Shut-Off Valve: 1/4 turn

Safety Interlock System

Equipped with Blade Brake Clutch (BBC).

Transmission

Variable

Speed Range: 0–4.0 mph (6.4 km/hr)

Cutting Deck

- Cutting Width: 30 inches (76 cm)
- Blade Brake: When the blade engagement control is moved to the disengaged position a friction brake pad stops the rotation of the blades.
- Blade Size: (2 ea.): 15.40 inches (39.1 cm)
- Deck: 30 inches rigid. Deck design allows for bagging, mulching or side discharge.
- Cutting Height Adjustment:

  Adjusts from 1 1/2 inch (3.8 cm) to 5 inches (12.7 cm) in 1/2 inch (1.3 cm) increments.
- Mulching Kit: High performance mulch kit optional

Dimensions

Curb Weight:

All Models Except CS: 170 lb (77 kg)

CS Models: 190 lb (86 kg)

Overall Width:

31.9 inches (81 cm)

Overall Length and Height at 1 1/2 inch Cutting Height:

Handle Setting	Length	Height
High	62.60 inches (159.0 cm)	41.75 inches (106.0 cm)
Medium	66.00 inches (167.6 cm)	38.25 inches (97.2 cm)
Low	68.60 inches (174.2 cm)	34.75 inches (88.3 cm)

Product Overview

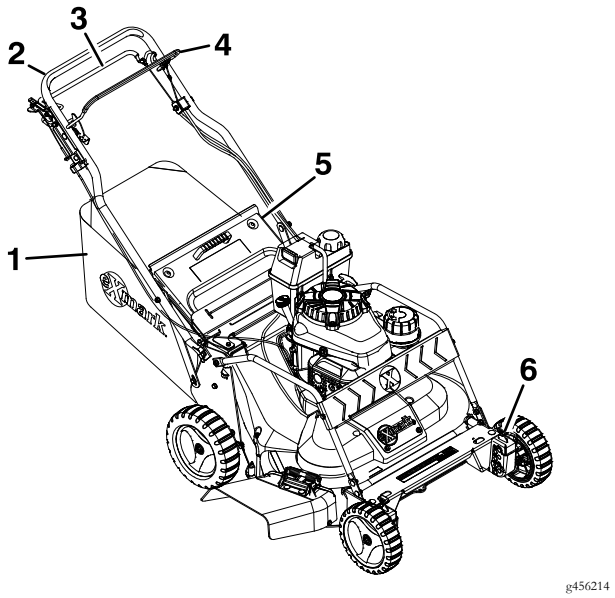

Figure 3

1. Grass bag
2. Handle
3. Drive Bail
4. Blade Control Bail
5. Discharge door
6. Front wheel height adjuster

Operation

Note: Determine the left and right sides of the machine from the normal operating position.

Controls

Become familiar with all the controls before starting the engine and operating the machine.

Blade Control Bail

Located on the upper handle as shown in Figure 4.

When the blade control bail is depressed, the system senses that the operator is in the normal operator's position.

When the blade control bail is released, the system senses that the operator has moved from the normal operating position and will stop the blade.

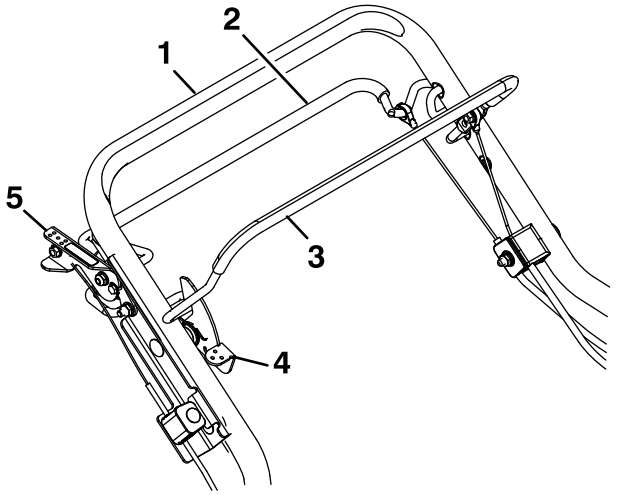

Figure 4

1. Handle
2. Drive bail
3. Blade control bail
4. Blade control lock lever
5. Park brake lever (if equipped)

Self-Propel Drive Bail (Self-Propelled Units Only)

Located on the upper handle as shown in Figure 4.

When the self-propel drive bail is squeezed against the handle, the unit ground speed will change based

on the distance between the bail and the handle. When this bail is released the unit will stop moving.

Throttle-Choke-Engine Stop Control

The throttle-choke-engine stop control is located on the left side of the engine as shown inFigure 5 and Figure 9.

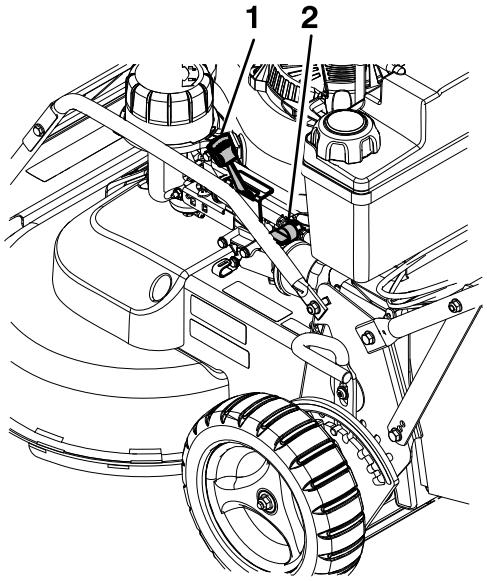

g459522

Figure 5

1. Throttle-Choke-Engine stop control
2. Fuel valve

The lever is used to control engine speed. Moving the lever to the full forward (Choke) position will place the lever in the choke position. The choke aids in starting a cold engine. Moving the throttle control forward will increase engine speed and moving it to the rear will decrease engine speed.

The throttle-choke-engine stop control also includes an engine shutdown position. Moving the lever into the full rearward (Off) position will shutdown the engine.

Blade Control Lock Lever

The blade control lock lever is located on the right side of the handle next to the Blade Control Bail as shown in Figure 4.

Moving the blade control lock lever into the full forward position releases the blade control bail. Squeezing the blade control bail against the handle engages the blade. Releasing the blade control bail automatically disengages the blade. The blade control lock lever will reset to lock the blade control bail.

Park Brake Lever— If Equipped

Located on the upper handle.

Engage the parking brake by pulling the brake lever up towards the handle.

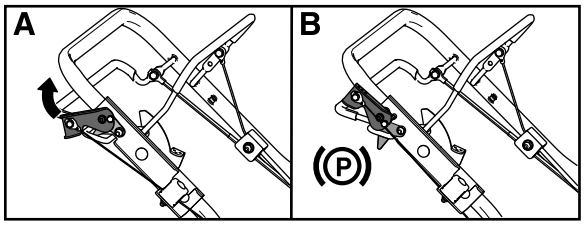

g288835

Figure 6

Disengage the parking brake by pushing the brake lever down away from the handle.

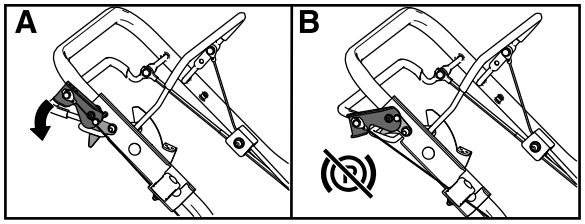

g288933

Figure 7

Fuel Shut-Off Valve

The fuel shut off valve is located between the carburetor and the fuel tank. The fuel shut off valve shuts off the flow of fuel when the machine will not be used for a few days, when parking inside a building, and during transport to and from the job.

Rotate the valve 1/4 turn clockwise to shut off fuel. Rotate the valve 1/4 turn counterclockwise to turn on fuel.

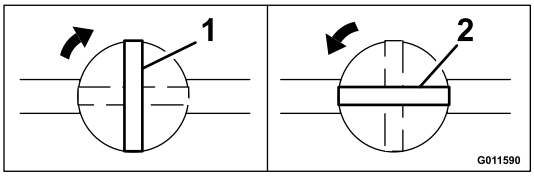

g011590

Figure 8

1. Rotate clockwise to close
2. Rotate counterclockwise to open

Before Operation

Before Operation Safety

- Evaluate the terrain to determine what accessories and attachments are needed to properly and safely perform the job. Only use accessories and attachments approved by Exmark.
- Inspect the area where the machine is to be used and remove all rocks, toys, sticks, wires, bones, and other foreign objects. These can be thrown or interfere with the operation of the machine and may cause personal injury to the operator or bystanders.
- This mower was designed for one operator only. Do Not carry passengers.
- Wear appropriate personal protective equipment such as safety glasses, long pants, substantial slip-resistant footwear, and hearing protection. Tie back long hair and avoid loose clothing and loose jewelry which may get tangled in moving parts.
- This machine produces sound levels in excess of 85 dBA at the operator's ear and can cause hearing loss through extended periods of exposure. Wear hearing protection when operating this machine.
- Check that the following items are in place and in proper working condition: the operator presence controls, safety switches, guards, shields, discharge deflector and/or the entire grass catcher system. Do not operate the machine unless they are in proper working condition. Replace worn or deteriorated parts with genuine Exmark parts when necessary.

⚠ DANGER

It is essential that operator safety mechanisms be connected and in proper operating condition prior to use. Contacting the blade will result in serious personal injury.

Shut off the engine and wait for all moving parts to stop before leaving the operating position. When the blade control bail is released, the blade should stop within 3 seconds. If not, stop using the machine immediately and contact an Authorized Service Dealer.

- Do Not operate the mower when people, especially children, or pets are in the area. Shut off the machine and attachment(s) if anyone enters the area.
- Do Not operate the machine without the entire grass collection system, discharge deflector, or other safety devices in place and in proper working condition. Grass catcher components are subject to wear, damage and deterioration, which could expose moving parts or allow objects to be thrown. Frequently check for worn or deteriorating components and replace them with the manufacturer's recommended parts when necessary.

Fuel Safety

⚠ DANGER

Gasoline is extremely flammable and vapors are explosive.

A fire or explosion from gasoline can burn you, others, and cause property damage.

- **Fill the fuel tank outdoors on level ground, in an open area, when the engine is cold. If fuel is spilled, Do Not attempt to start the engine. Move away from the area of the spill and avoid creating any source of ignition until fuel vapors have dissipated.**
- **Do Not refill the fuel tank or drain the machine indoors or inside an enclosed trailer.**
- **Never smoke when handling gasoline, and stay away from an open flame or where gasoline fumes may be ignited by spark.**
- **Add fuel before starting the engine. Never remove the cap of the fuel tank or add fuel when engine is running or when the engine is hot.**
- **Store gasoline in an approved container and keep it out of the reach of children.**
- **Do Not operate without entire exhaust system in place and in proper working condition.**

- In certain conditions during fueling, static electricity can be released causing a spark which can ignite gasoline vapors.
  - Do Not fill containers inside a vehicle or on a truck or trailer bed with a plastic liner. Always place containers on the ground and away from your vehicle before filling.
  - When practical, remove gas-powered equipment from the truck or trailer and refuel the equipment with its wheels on the ground. If this is not possible, then refuel such equipment on a truck or trailer from a portable container, rather than from a gasoline dispenser nozzle.
  - If a gasoline dispenser nozzle is used, keep the nozzle in contact with the rim of the fuel tank or container opening at all times until fueling is complete. Do Not use a nozzle lock open device.
- Do Not overfill the fuel tank. Fill the fuel tank to the bottom of the filler neck. The empty space in the tank allows gasoline to expand. Overfilling may result in fuel leakage or damage to the engine or emission system.
- Gasoline is harmful or fatal if swallowed. Long-term exposure to vapors may cause serious injury and illness.
  - Avoid prolonged breathing of vapors.
  - Keep face away from nozzle and gas tank/container opening.
  - Keep away from eyes and skin.
- To help prevent fires:
  - Keep engine and engine area free from accumulation of grass, leaves, excessive grease or oil, and other debris which can accumulate in these areas.
  - Clean up oil and fuel spills and remove fuel soaked debris.
  - Allow the machine to cool before storing the machine in any enclosure. Do Not store the machine or fuel container, or refuel, where there is an open flame, spark, or pilot light such as on a water heater or other appliance.

Operating Instructions

During Operation Safety

General Safety

The operator must use their full attention when operating the machine. **Do Not** engage in any activity that causes distractions; otherwise, injury or property damage may occur.

⚠ WARNING

Operating engine parts, especially the muffler, become extremely hot. Severe burns can occur on contact and debris, such as leaves, grass, brush, etc. can catch fire.

Clean the machine as stated in the Maintenance section. Keep engine and engine area free from accumulation of grass, leaves, excessive grease or oil, and other debris which can accumulate in these areas.

- Operate the engine only in well-ventilated areas. Exhaust gases contain carbon monoxide, which is an odorless deadly poison.

- Do not operate the machine while ill, tired, or under the influence of alcohol or drugs.
- Operate the machine only in good visibility and appropriate weather conditions. Do not operate the machine when there is the risk of lightning.
- Keep away from holes, ruts, bumps, rocks, and other hidden hazards. Use care when approaching blind corners, shrubs, trees, tall grass or other objects that may hide obstacles or obscure vision. Uneven terrain could overturn the machine or cause the operator to lose their balance or footing.
- Start the engine with your feet well away from the blades.
- Do not operate the machine without all safety shields, guards, switches, and other devices in place and in proper working condition.
- Keep your hands and feet away from the moving parts. Keep clear of the discharge opening.
- Do not mow with the discharge deflector raised, removed, or altered unless there is a grass-collection system or mulch kit in place and working properly.
- Never raise the deck with blades running.
- Be aware of the mower discharge path and direct discharge away from others. Avoid discharging material against a wall or obstruction as the material may ricochet back toward the operator. Stop the blades, slow down, and use caution when crossing surfaces other than grass and when transporting the mower to and from the area to be mowed.
- Be alert, slow down and use caution when making turns. Do not mow in reverse unless it is absolutely necessary. Always look down and behind you before moving the machine in reverse.
- Park the machine on level ground. Stop engine, wait for all moving parts to stop, and remove the spark plug wire(s).
  - Before checking, cleaning or working on the mower.
  - After striking a foreign object or abnormal vibration occurs (inspect the mower for damage and make repairs before restarting and operating the mower).
  - Before clearing blockages.
  - Whenever you leave the mower. Do Not leave a running machine unattended.
- Stop engine, wait for all moving parts to stop:
  - Before refueling.
  - Before dumping the grass catcher.
  - Before making height adjustments.
- Tragic accidents can occur if the operator is not alert to the presence of children. Children are often attracted to the machine and the mowing activity. Never assume that children will remain where you last saw them.
  - Keep children out of the mowing area and under the watchful care of another responsible adult, not the operator.
  - Be alert and turn the machine off if children enter the area.
  - Before and while backing or changing direction, look behind, down, and side-to-side for small children.
  - Never allow children to operate the machine.
  - Do Not carry children, even with the blades shut off. Children could fall off and be seriously injured or interfere with the safe operation of the machine. Children that have been given rides in the past could suddenly appear in the working area for another ride and be run over or backed over by the machine.

Slope Safety

- Slopes are a major factor related to loss of control and rollover accidents, which can result in severe injury or death. The operator is responsible for safe slope operation. Operating the machine on any slope requires extra caution. Before using the machine on a slope, the operator must:
  - Review and understand the slope instructions in the manual and on the machine.
  - Evaluate the site conditions of the day to determine if the slope is safe for machine operation. Use common sense and good judgment when performing this evaluation. Changes in the terrain, such as moisture, can quickly affect the operation of the machine on a slope.
- Operate across slopes, never up and down. Avoid operation on excessively steep or wet slopes. Poor footing could cause a slip and fall accident.
- Identify hazards at the base of the slope. Do Not operate the machine near drop offs, ditches, embankments, water or other hazards. The

machine could suddenly roll over if a wheel goes over the edge or the edge collapses. Keep a safe distance between the machine and any hazard. Use a hand held tool to operate in these areas.

- Avoid starting, stopping or turning the machine on slopes. Avoid making sudden changes in speed or direction; turn slowly and gradually.
- Do Not operate a machine under any conditions where traction, steering or stability is in question. Be aware that operating the machine on wet grass, across slopes or downhill may cause the machine to lose traction. Loss of traction to the drive wheels may result in sliding and a loss of braking and steering. The machine can slide even if the drive wheels are stopped.
- Remove or mark obstacles such as ditches, holes, ruts, bumps, rocks or other hidden hazards. Tall grass can hide obstacles. Uneven terrain could overturn the machine.
- If you lose control of the machine, step away from the direction of travel of the machine.
- Always keep the machine in gear when going down slopes. Do Not coast downhill.

Handle Adjustment

The height of the handle can be adjusted for comfortable operation. Stand behind the handle to determine the height. To adjust the handle height, position the hardware into one of the three holes in the handle bracket.

Open the Fuel Shut-Off Valve

Rotate the valve 1/4 turn counterclockwise to turn the fuel on.

Starting the Engine

1. Connect the wire to the spark plug.

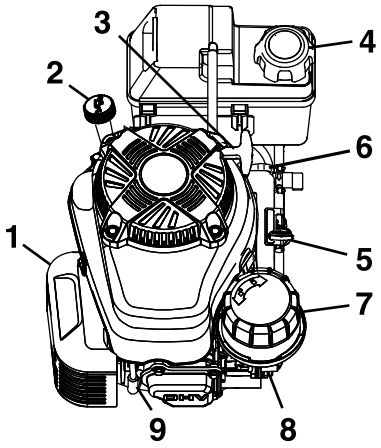

Figure 9

1. Muffler
2. Oil fill/dipstick
3. Recoil starter handle
4. Fuel tank cap
5. Throttle-choke-engine stop control
6. Oil filter
7. Air cleaner
8. Primer bulb
9. Spark plug

2. Open the fuel valve.
3. Move the throttle-choke-engine stop control to the full forward (Choke) position.

   Note: **Do Not** use the choke when the engine is warm.
4. Pull the starter handle lightly until you feel resistance, then pull it sharply. Allow the rope to return slowly.
5. When the engine starts, move the throttle-choke-engine stop control to the Fast position.

Stopping the Engine

1. Bring the machine to a full stop.
2. Release the blade control bail. The blade should stop within three seconds; the engine will continue to run. Move the throttle-choke-engine stop control to the Stop position to shut down the engine.

   Note: If the blade does not stop within 3 seconds after releasing the blade control bail, contact an Authorized Service Dealer.
3. Close the fuel shut-off valve, if equipped, when the machine will not be in use for a few days, when transporting, or when the machine is parked inside a building.

Operating the Self-Propel Drive

The lawn mower is variable speed, the more you squeeze the drive bail against the handle the faster the machine travels.

1. Start the engine.
2. Squeeze the drive bail against the handle (see Figure 4).

   Note: You can vary the ground speed by increasing or decreasing the distance between the ground speed control bail and the handle. Lower the control bail to decrease the ground speed when you are making a turn or if the lawn mower is moving too fast for you. If you lower the control bail too far the lawn mower stops self-propelling. Squeeze the ground speed control bail closer to the handle to increase the ground speed. When you hold the ground speed control bail tight against the handle, the lawn mower self-propels at the maximum ground speed. Release the drive bail to stop moving when you use the lawn mower for trimming or whenever you leave the lawn mower.
3. To disengage the self-propel drive, release the drive bail.

Operating the Blade Control Lever

1. Start the engine.
2. Push and hold the blade control lock lever forward to release the blade control bail (Figure 10).

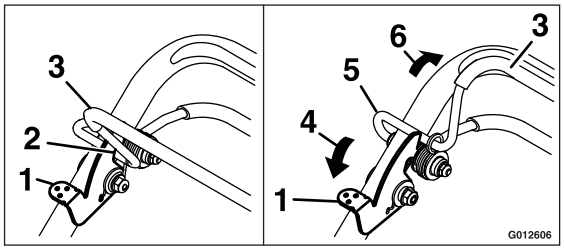

g012606

Figure 10

1. Blade control lock lever
2. Locked position
3. Blade control bail
4. Push
5. Unlocked position
6. Squeeze against handle

3. Squeeze the blade control bail against the handle and release the blade control lock lever; the blade should engage.
4. Release the blade control bail to disengage the blade. The blade control lock lever will reset to lock the blade control bail.

Checking the Blade Brake Clutch

Check the Blade Brake Clutch (BBC) system before each use to ensure that it is operating properly.

Normal Test:

1. Stop the engine and wait for all moving parts to stop.
2. Move the lawn mower onto a paved surface in a non-windy area.
3. Set all four wheels to the 2 1/2 inches (6.4 cm) cutting height (see Figure 12 and Figure 14).
4. Take a half sheet of newspaper and crumple it into ball small enough to go under the deck (about 3 inches or 7.6 cm in diameter) as shown in Figure 11.

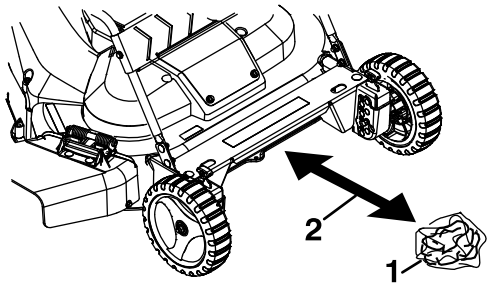

g456229

Figure 11

1. Crumpled newspaper
2. 5 inches (12.7 cm)

5. Place the ball of newspaper 5 inches (12.7 cm) in front of the lawn mower.
6. Start the engine.
7. Push the blade control lock lever forward to release the blade control bail (Figure 4).
8. Squeeze the blade control bail against the handle; the blade should engage.
9. Release the blade control bail. You should hear a "bang." The blade should stop in three seconds. The blade control lock lever should reset to lock the blade control bail.
10. Immediately push the lawn mower over the newspaper ball.
11. Stop the engine and wait for all moving parts to stop.
12. Walk around the lawn mower to check for the newspaper ball. If the ball did not go under the deck, repeat steps 6 through 11.
13. Pull the lawn mower away from the newspaper. If the newspaper ball unravels or is shredded, the blade has not properly stopped, resulting

in an unsafe operating condition. **Contact an Authorized Service Dealer.**

⚠ DANGER

If the blade brake clutch system is inoperative, the blade will continue to rotate when you release the blade control bail. Contact with the blade could occur, causing serious injury.

- **Check the BBC operation before each use.**
- **Never use the BBC-equipped lawn mower with an inoperative safety system.**
- **Take your lawn mower to an Authorized Service Dealer for repair if the safety system fails to operate properly.**

Test Using the Grass Bag

1. If the mulch plug is installed on the mower, remove it (refer to Removing the Mulch Plug). If the side discharge deflector is on, remove it and install the side discharge door (refer to Using the Side Discharge Deflector).
2. Install the empty grass bag on the rear of the mower (refer to Installing the Grass Bag).
3. Start the engine.
4. Push the blade control lock lever forward to release the blade control bail (Figure 4).
5. Squeeze the blade control bail against the handle.
6. The bag should begin to inflate, indicating that the blade is engaged and rotating.
7. Release the blade control bail. If the bag does not immediately deflate, it indicates that the blade is still rotating. The blade brake clutch mechanism may be deteriorating, and, if ignored could result in an unsafe operating condition. Have the lawn mower inspected and serviced by an Authorized Service Dealer.
8. Stop the engine and wait for all moving parts to stop.

Adjusting the Cutting Height—All Models Except CS

The rear wheels are adjusted together with a height adjustment rod located on the mower housing by the left rear wheel. The front wheels are adjusted separately by removing the front wheel shaft assemblies, adjusting the height, and then replacing the shaft assemblies. The cutting height can be adjusted from 1 1/2 inches (38 mm) to 5 inches (127 mm) in 1/2 inch (12.7 mm) increments.

⚠ WARNING

Adjusting the cutting height levers could bring your hands into contact with a moving blade. A moving blade can cause serious injury.

- **Stop the engine and wait for all movement to stop before adjusting the cutting height.**
- **Do Not put your fingers under the housing when adjusting the cutting height.**

- **Rear Wheel Adjustment:**

1. Pull the wheel height adjustment rod upward to release the pin from the notch in the adjustment bracket (Figure 12).

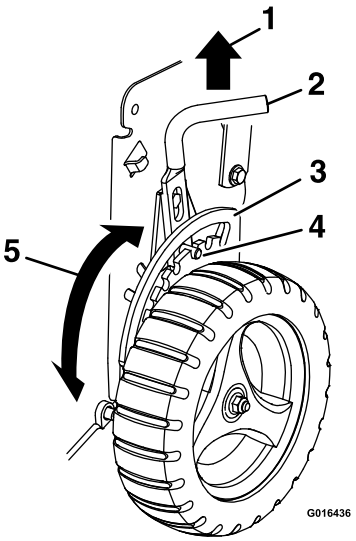

g016436

Figure 12

1. Pull upward
2. Wheel height adjustment rod
3. Indicator
4. Pin
5. Rotate to desired setting

2. Apply downward pressure or lift the housing to rotate the height adjustment bracket to the desired setting.
3. Release the wheel height adjustment rod to set the pin securely in the desired notch.

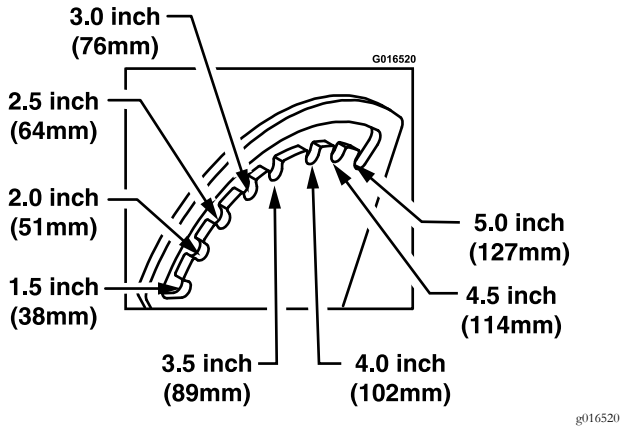

Figure 13

- **Front Wheel Adjustment**

1. Pull up on the height lock and pull the front wheel shaft assembly outward as shown in Figure 14.

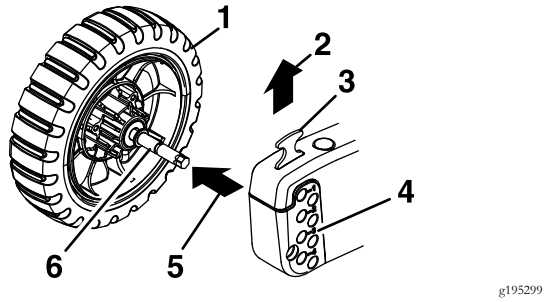

Figure 14

1. Front wheel shaft assembly
2. Pull up
3. Height lock
4. Front quadrant block cut heights
5. Pull outward
6. Shaft groove

2. Insert the front wheel shaft assembly into the desired cut height setting in the front quadrant block. Lower the height lock into the groove on the front wheel shaft. Pull and push the wheel shaft assembly to make sure it has locked into place.

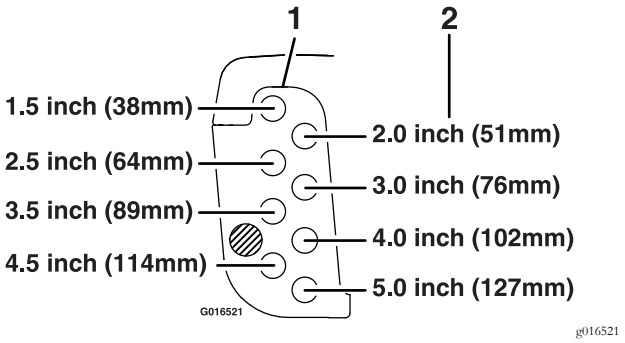

Figure 15

1. Front quadrant block
2. Cutting heights

Adjusting the Cutting Height—CS Models Only

⚠ WARNING

Adjusting the cutting-height could bring your hands into contact with a moving blade and result in serious injury.

- **Shut off the engine and wait for all moving parts to stop before adjusting the cutting height.**
- **Do not put your fingers under the housing when adjusting the cutting height.**

The cutting height is controlled with a front pin and a rear lever. The pin is at the front of the machine, and the lever is on the left side of the machine. To raise or lower the machine, remove the pin and engage the lever, raise or lower the machine, and then lock the pin and disengage the lever.

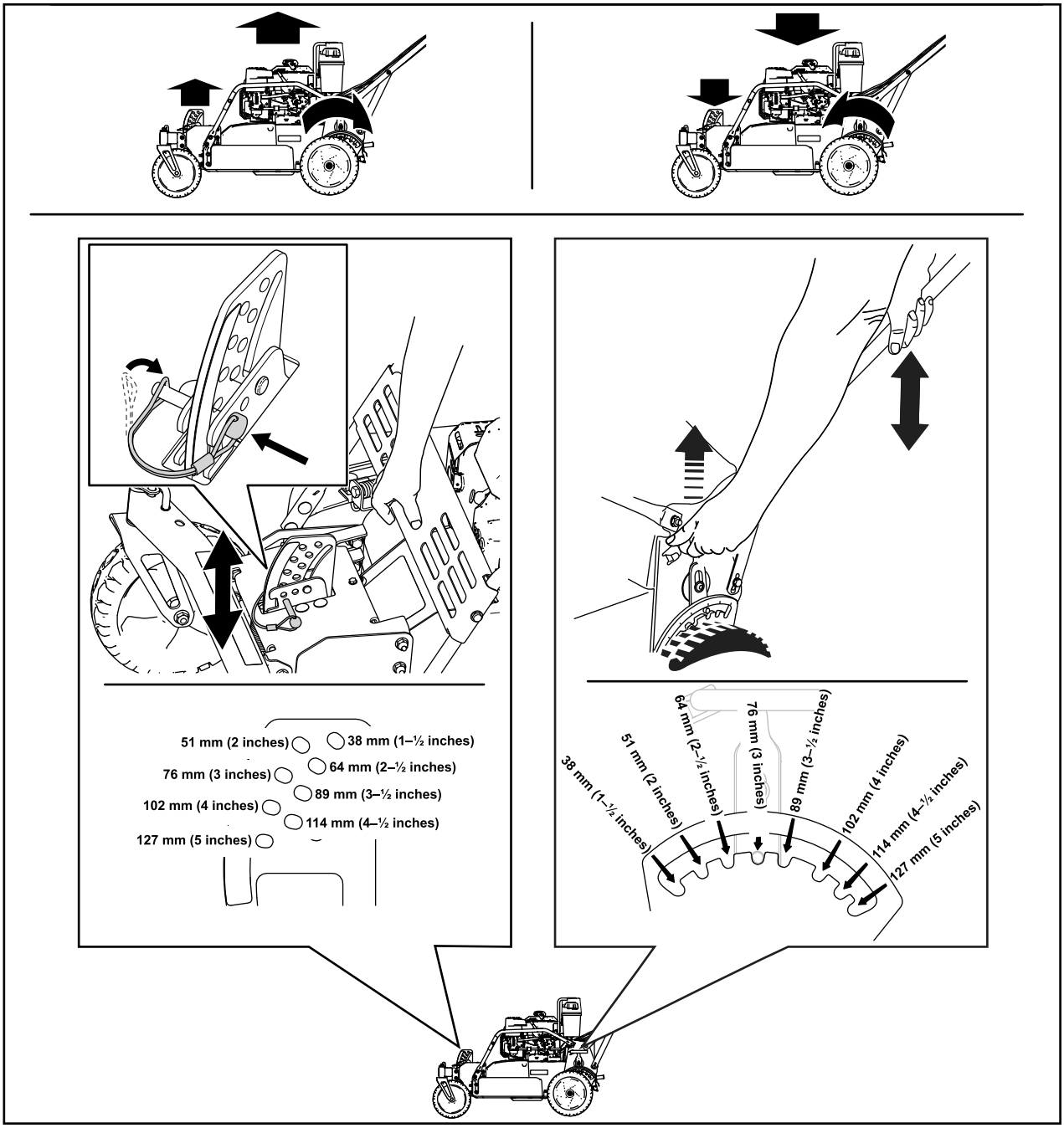

g523752

Figure 16

Using the Grass Bag

- Installing the Grass Bag
  1. Release the blade control lock lever and wait for the blade and all moving parts to stop.
  2. If the mulch plug is installed on the mower, remove it (refer to Removing the Mulch Plug). If the side discharge deflector is on, remove it and install the side discharge door (refer to Using the Side Discharge Deflector).
  3. Open the rear discharge door.
  4. Grasp the handle on the bag and set the rear of the bag frame onto the handle bracket notch (Figure 17).

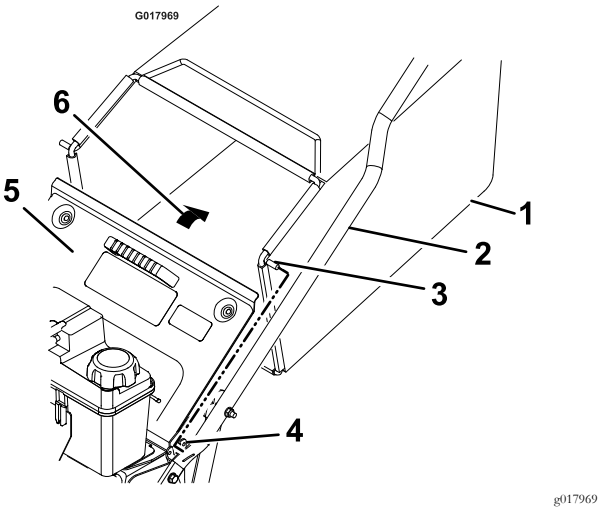

Figure 17

1. Bag
2. Handle
3. Bag frame
4. Handle bracket notch
5. Rear door
6. Lower

  5. Once the bag is seated, lower the rear discharge door onto the bag.

- Mowing with the Grass Bag

⚠ WARNING

A worn grass bag could allow small stones and other similar debris to be thrown in the operator's or bystander's direction. Thrown objects can result in serious personal injury or death to the operator or bystanders.

Check the grass bag frequently. If it is damaged, install a new Exmark replacement bag.

Cut the grass until the bag is full. To see if the grass bag is full, release the blade control lock lever and wait for the blade to stop. Feel the bag to determine whether the bag needs to be emptied.

Note: Do Not overfill the bag.

- Removing the Grass Bag
  1. Release the blade control lock lever and wait for the blade and all moving parts to stop.
  2. Raise the rear discharge door and grasp the handle on the bag.
  3. Lift the bag off of the lawn mower and lower the rear discharge door.
  4. Gradually tip the bag forward to empty the clippings.
  5. To install the bag, refer to the section on Installing the Grass Bag.

⚠ DANGER

If the rear discharge door does not close completely, the lawn mower could throw objects. Thrown objects can result in serious personal injury or death to the operator or bystanders.

- **Never open the door to the rear discharge opening when the blades are still moving.**
- **If you cannot close the door because the grass clippings clog the discharge area, stop the engine and gently move the discharge door handle back and forth until you can close the door completely. If you still cannot close the door, remove the obstruction with a stick, not your hand.**

Using the Mulch Plug

Occasionally you may wish to use the mulch plug to mulch the grass and leaf clippings back into the lawn.

- Installing the Mulch Plug:
  1. Stop the engine and wait for all moving parts to stop.
  2. If the grass bag is on the mower, remove it (refer to Removing the Grass Bag). If the side discharge deflector is on, remove it and lower the side discharge door (refer to Using the Side Discharge Deflector).
  3. Raise the rear discharge door and insert the mulch plug into the discharge opening. The plug will snap into the mower housing.

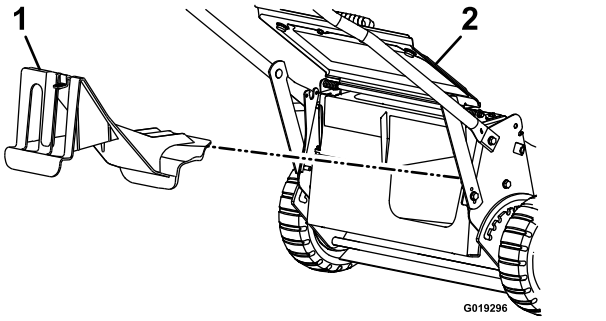

Figure 18

1. Mulch plug
2. Rear discharge door

4. Lower the discharge door.

- Removing the Mulch Plug:

  Note: When grass is thick and lush, clippings may collect on and around the discharge tunnel plug. This may make it difficult to remove the plug. Clean the plug thoroughly after each use.

1. Stop the engine and wait for all moving parts to stop.
2. Raise the rear discharge door and pull the mulch plug out of the discharge tunnel.
3. Lower the discharge door.

Using the Side Discharge Deflector

Use the side discharge for cutting very tall grass.

⚠ WARNING

The blades are sharp; contacting the blades can result in serious personal injury.

Stop the engine and wait for all moving parts to stop before leaving the operating position.

- Installing the Side Discharge Deflector:

1. Stop the engine and wait for all moving parts to stop.
2. Remove the grass bag if it is installed on the mower (refer to Removing the Grass Bag).
3. Install the mulch plug (refer to Installing the Mulch Plug).
4. Lift and hold the side discharge spring in the "up" position and pull outward on the discharge door to remove (see Figure 19).

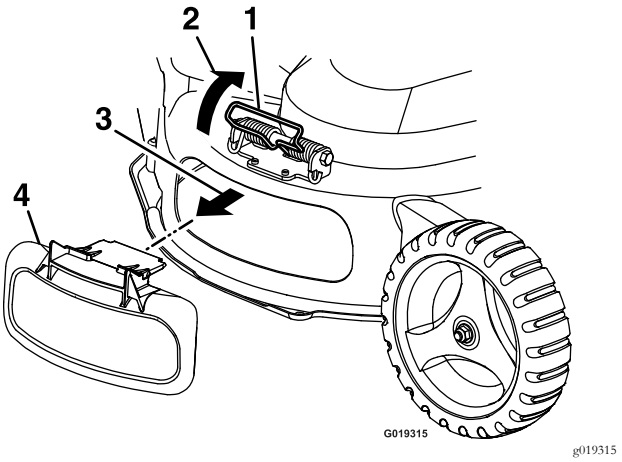

Figure 19

1. Side discharge spring
2. Lift and hold in "up" position
3. Pull outward
4. Side discharge door

5. With the side discharge spring held in the "up" position, place the discharge deflector onto the mower housing over the opening. Allow the spring to lower over the tabs on the discharge deflector. Make sure the discharge deflector is securely in place (see Figure 20).

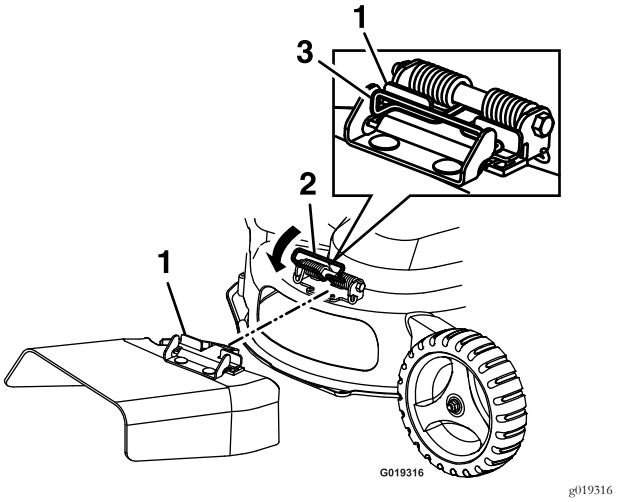

Figure 20

1. Discharge deflector tabs
2. Lower side discharge spring
3. Secured position

Important: Make sure the mulch plug is in place before using the side discharge deflector (see Figure 18).

⚠ DANGER

An uncovered discharge opening will allow objects to be thrown in an operator's or bystander's direction. Also, contact with the blade could occur. Thrown objects or blade contact can cause serious injury or death.

Never operate the mower with the side discharge door raised, removed, or altered unless there is a discharge deflector and mulch plug in place and working properly.

- Removing Side Discharge Deflector:
  1. Stop the engine and wait for all moving parts to stop.
  2. Lift and hold the side discharge spring in the "up" position and pull outward on the discharge deflector to remove it (reference Figure 19).
  3. With the side discharge spring held in the "up" position, place the discharge door onto the mower housing over the opening. Allow the spring to lower over the tabs on the discharge door. Make sure the discharge door is securely in place.

After Operation

General Safety

- Park machine on level ground, set parking brake (if equipped), stop engine, and disconnect spark plug wire. Wait for all moving parts to stop before leaving the operator's position. Allow the machine to cool before servicing, adjusting, fueling, cleaning, or storing.
- Clean grass, leaves, excessive grease or oil, and other debris from the mower deck, muffler, drives, grass catcher, and engine area to help prevent fires.
- Close the fuel shut-off valve before storing or transporting the machine.

Transporting the Machine

- Use extreme care when loading and unloading the machine into a trailer or truck.
- Use full width ramps for loading the machine into a trailer or truck.
- Tie the machine down securely using straps, chains, cable or ropes. If possible both front and rear straps should be directed down and outward from the machine.
- Be sure the fuel shut-off valve is closed during transport.

Maintenance

Note: Determine the left and right sides of the machine from the normal operating position.

Maintenance Safety

- Park machine on level ground, set parking brake (if equipped), stop engine, and disconnect spark plug wire. Wait for all moving parts to stop before leaving the operator's position. Allow the machine to cool before servicing, adjusting, fueling, cleaning, or storing.

⚠ WARNING

Tipping the lawn mower may cause the fuel to leak from the carburetor or the fuel tank. Gasoline is extremely flammable, highly explosive, and under certain conditions, can cause personal injury or property damage.

Avoid fuel spills by running the engine dry or by removing the gasoline with a hand pump; never siphon.

- If you leave the wire on the spark plug, someone could accidently start the engine and seriously injure you or other bystanders. Disconnect the wire from the spark plug before you perform any maintenance.
- Never allow untrained personnel to service machine.
- Disconnect battery or remove spark plug wire before making any repairs. Disconnect the negative terminal first and the positive last. Reconnect positive first and negative last.
- Keep all guards, shields, switches, and all safety devices in place and in proper working condition. Frequently check for worn or deteriorating components and replace them with genuine Exmark parts when necessary.
- Keep hands and feet away from moving parts. If possible, Do Not make adjustments with the engine running. If the maintenance or adjustment procedure requires the engine to be running and components moving, use extreme caution.
- Check all bolts frequently to maintain proper tightness.

Recommended Maintenance Schedule(s)

Maintenance Service Interval	Maintenance Procedure
After the first 5 hours	• Change the engine oil. • Check the blade drive system.
Before each use or daily	• Check the engine oil level. • Check the mower blade and the engine mounting fasteners. • Check the stopping time of the blade brake. The blade must stop within 3 seconds of releasing the bail; if it does not, contact an Authorized Service Dealer for repair. • Check for loose hardware. • Check the air filter. • Check the parking-brake function. • Clean the engine and exhaust system area. • Clean the grass build-up from under the deck. • Clean the discharge tunnel and plug. • Clean the grass and debris build-up from the machine and cutting deck.
Every 25 hours	• Clean the foam pre-cleaner.
Every 50 hours	• Change the engine oil. (May need more often under severe conditions.) • Check the condition of the belts. • Check the blade drive system. • Check for leaks in the fuel systems and /or deteriorating fuel hose. • Clean under the belt access cover.

Maintenance Service Interval	Maintenance Procedure
Every 100 hours	• Change the oil filter. • Check the spark plugs. • Clean the fuel filter element.
Every 250 hours	• Replace the Blade Brake Clutch (BBC) belt. • Change the transmission belt.
Every 300 hours	• Replace the paper air filter. (May need more often in dusty conditions. See the Engine manual for additional information.)
Yearly or before storage	• Empty the fuel tank before repairs as directed or before storage.

Periodic Maintenance

Engine Maintenance

Important: Refer to the Engine Owner's Manual for additional maintenance procedures.

Engine Safety

⚠ WARNING

The engine can become very hot, especially the muffler and exhaust components. Touching a hot engine can cause severe burns.

Allow the engine to cool completely before service or making repairs around the engine area.

Do Not change the engine governor setting or overspeed the engine.

Check Engine Oil Level

Service Interval: Before each use or daily

1. Stop engine and wait for all moving parts to stop. Make sure the machine is on a level surface.
2. Check with engine cold.
3. Clean area around dipstick. Remove dipstick and wipe oil off. Reinsert the dipstick and push it all the way down into the tube. **Do Not** screw into place. Remove the dipstick and read the oil level.

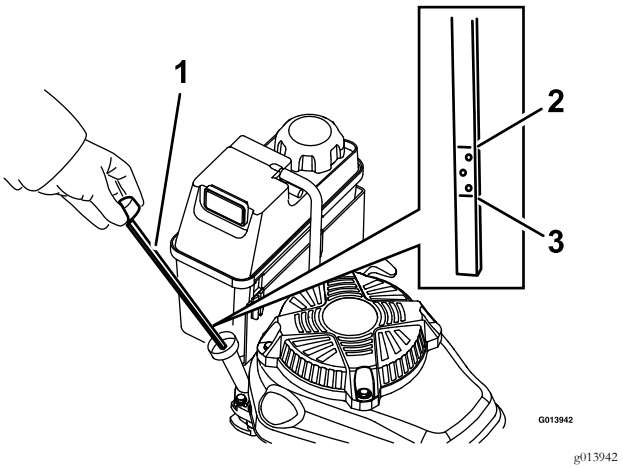

g013942

Figure 21

1. Dipstick
2. Full
3. Add

4. If the oil level is low, wipe off the area around the oil fill cap, remove cap and fill to the "FULL" mark on the dipstick. Exmark 4-Cycle Premium Engine Oil is recommended; refer to the Engine Owner's manual for appropriate API rating and viscosity. **Do Not** overfill.

Important: Do Not operate the engine with the oil level below the "LOW" (or "ADD") mark on the dipstick, or over the "FULL" mark.

Check the Mower Blade

Service Interval: Before each use or daily

Always mow with a sharp blade. A sharp blade cuts cleanly and without tearing or shredding the grass blade.

1. Stop the engine and wait for all moving parts to stop.
2. Disconnect the wire from the spark plug (Figure 9).

3. Drain the gasoline from the fuel tank. Refer to **Emptying the Fuel Tank and Cleaning the Fuel Filter** section.

4. Remove the bagger from the machine. Tip the machine backwards until the upper handle rests on the ground and place a jack stand under the machine.

⚠ CAUTION

Raising the mower for service or maintenance relying solely on mechanical or hydraulic jacks could be dangerous. The mechanical or hydraulic jacks may not be enough support or may malfunction allowing the unit to fall, which could cause injury.

Do Not rely solely on mechanical or hydraulic jacks for support. Use adequate jack stands or equivalent support.

5. Inspect the blades for sharpness and wear, especially where the flat and the curved parts meet (see Figure 22). Because sand and abrasive material can wear away the metal that connects the flat and curved parts of the blade, check the blade before using the lawn mower. If you notice a slot or wear (Figure 22B and Figure 22C), replace the blade.

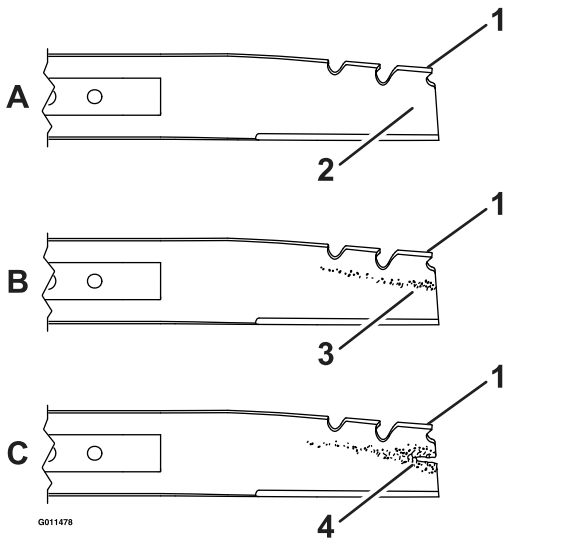

g011478

Figure 22

1. Sail
2. Flat
3. Wear
4. Slot

⚠ DANGER

A worn or damaged blade can break. A piece of the blade could be thrown into the operator's or bystander's area, resulting in serious personal injury or death.

- **Inspect the blade periodically for wear or damage.**
- **Replace a worn or damaged blade.**

- Removing Mower Blades:

A. To remove the blade, use a block of wood to hold the blade steady. Make sure to grasp the end of the blade using a rag or thickly padded glove.

B. Remove the blade bolt, blade driver, and blade.

C. Inspect blades and sharpen or replace as required.

D. Inspect the pins on the blade driver for wear and damage or replace as required.

- Installing Mower Blades:

A. Install the blade driver by inserting the raised area into the recess on the cutter housing.

B. Make sure to grasp the end of the blade using a rag or a thickly padded glove. Align the two holes on the blade with the two holes on the blade driver and install a sharp, balanced Exmark blade and blade bolt as shown in Figure 23. The sail of the blade must point toward the top of the lawn mower housing for proper installation.

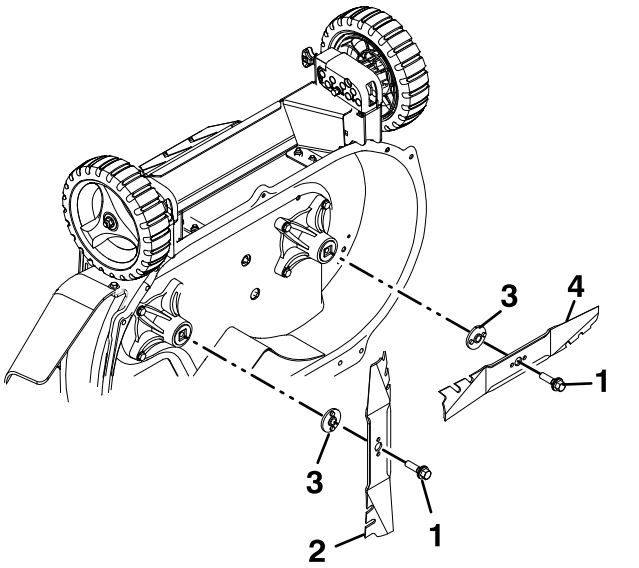

g456231

Figure 23

1. Blade bolt
2. Blade-vertical position
3. Blade driver
4. Blade-horizontal position

C. Torque the blade bolt to 60 ft-lb (82 N-m).

D. Make sure the installed blade is vertical before installing the second blade. The second blade must be installed perpendicular to the first using steps A through C. The two blades will form a sideways "T" as shown in Figure 24.

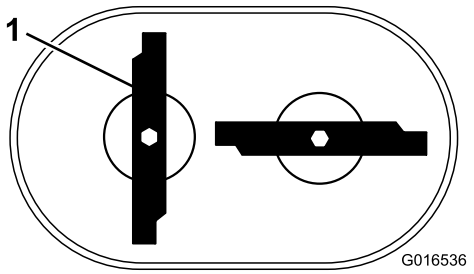

g016536

Figure 24

1. Blades form sideways "T"

E. Rotate the blades by hand a full 360 degree turn to ensure they Do Not touch.

⚠ WARNING

Incorrect installation of the blade or components used to retain the blade can be dangerous. Failure to use all original components and assembled as shown could allow a blade or blade component to be thrown out from under the deck resulting in serious personal injury or death.

Always install the original Exmark blades, blade drivers, and blade bolts as shown.

F. If they touch, the blades are not mounted correctly. Repeat steps A through E. If the blades still touch after repeating the steps, contact an Authorized Service Dealer.

6. Return the lawn mower to its upright position.
7. Connect the wire to the spark plug.

Check the Blade Brake Clutch

Service Interval: Before each use or daily

Refer to **Checking the Blade Brake Clutch** in Operation.

Check for Loose Hardware

Service Interval: Before each use or daily

1. Stop engine, wait for all moving parts to stop.
2. Visually inspect machine for any loose hardware or any other possible problem. Tighten hardware or correct the problem before operating.

Check Air Filter

Service Interval: Before each use or daily

1. Stop engine, wait for all moving parts to stop.
2. Disconnect the wire from the spark plug (Figure 9).
3. Remove the cover and clean it thoroughly.
4. Check the paper element and foam cleaner. If cleaning is required, see **Service Air Filter**.
5. Reinstall the cover.

Service Air Filter

Service Interval: Every 25 hours—Clean the foam pre-cleaner.

Every 300 hours— Replace the paper air filter. (May need more often in dusty conditions. See the Engine manual for additional information.)

Note: Do Not operate the engine without the air filter assembly; extreme engine damage will occur.

1. Stop engine, wait for all moving parts to stop.
2. Disconnect the wire from the spark plug (Figure 9).
3. Remove the cover and clean it thoroughly.

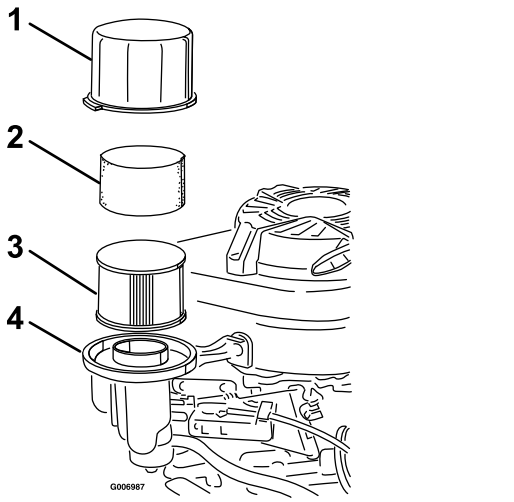

g006987

Figure 25

1. Cover
2. Foam element
3. Paper air filter
4. Air filter base

4. Remove the paper air filter and discard it as required.

   Note: Do Not try to clean a paper air filter.

5. Remove the foam element and wash it with a mild detergent and water, then blot it dry.
6. Saturate the element with clean engine oil, then squeeze it (Do Not twist) to remove the excess oil.
7. Install the foam element.
8. Install the new paper air filter.
9. Reinstall the cover.

Change Engine Oil

Service Interval: After the first 5 hours

Every 50 hours (May need more often under severe conditions.)

1. Run the engine to warm the engine oil.

   Note: Warm oil flows better and carries more contaminates.

⚠ WARNING

Oil may be hot after engine has been run. Contact with hot oil can cause severe personal injury.

Avoid contacting the hot engine oil when you drain it.

2. Stop engine, wait for all moving parts to stop.
3. Disconnect the wire from the spark plug.
4. Drain the gasoline from the fuel tank. Refer to **Emptying the Fuel Tank and Cleaning the Fuel Filter** section.
5. Place a suitable drain pan under the dipstick/oil drain.
6. Clean around the dipstick.
7. Remove the dipstick by rotating the cap counterclockwise and pulling it out.
8. Raise the left side of the lawn mower to drain the oil from the dipstick fill tube into the drain pan.
9. After draining the oil, return the lawn mower to the operating position.
10. Fill the crankcase with fresh oil to the upper limit mark on the dipstick. Use oil recommended in the **Check Engine Oil Level** section. **Do Not** overfill
11. Insert the dipstick into the filler neck and rotate the cap clockwise until it is tight.
12. Wipe up any spilled oil.
13. Connect the wire to the spark plug.
14. Recycle the used oil according to local codes.

Change Oil Filter

Service Interval: Every 100 hours

1. Run the engine to warm the oil.
2. Stop the engine and wait for all moving parts to stop.

3. Disconnect the wire from the spark plug.
4. Drain the engine oil.
5. Place a rag under the oil filter to catch any oil that may leak out as you remove the filter.
6. Remove the oil filter.
7. Use your finger to coat the gasket on the new filter with clean Exmark 4–Cycle Premium Engine oil (see Figure 26).

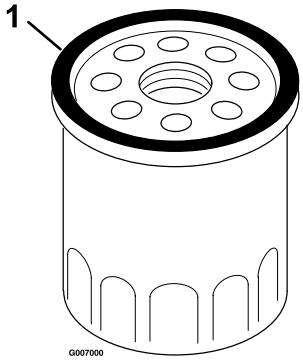

g007000

Figure 26

1. Gasket

8. Install the new filter and hand tighten it 2/3 turn only.
9. Fill the crankcase as stated in Check **Engine Oil Level** section. Exmark 4–Cycle Premium Engine oil is recommended. Refer to the Engine Owner's Manual for an acceptable alternative.
10. Connect the wire to the spark plug.
11. Run the engine for about 3 minutes.
12. Stop the engine, wait for all moving parts to stop, and check for oil leakage around the filter.
13. Add oil to compensate for the oil in the oil filter.
14. Recycle the used oil filter according to local codes.

Check Condition Of Belts

Service Interval: Every 50 hours

1. Stop engine, wait for all moving parts to stop.
2. Remove the belt cover to the lawn mower housing.
3. Check the belt for cracks, frayed edges, burn marks or any other damage.
4. Replace the damaged belt(s).

   If the blade drive belt is replaced or needs adjustment, see **Adjusting the Blade Drive Belt** in Adjustments.

Check the Blade Drive System

Service Interval: After the first 5 hours
Every 50 hours

1. Stop the engine and wait for all moving parts to stop.
2. Disconnect the wire from the spark plug.
3. Remove and retain the belt access panel by rotating the screws a quarter-turn.

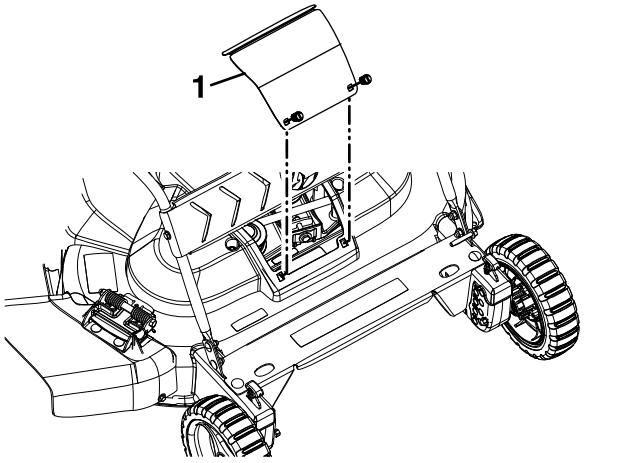

g456234

Figure 27

1. Belt access panel

4. Brush out all the debris around the belt area.
5. Use a feeler gauge, a piece of paper, or a note card against the frame and slide it down behind the belt tension spring.

   Note: The gap between the gauge and the spring should be .005-.030 inch (.13-.76 mm), tighten the adjusting bolt and nut until the paper barely slides freely in and out of the gap.

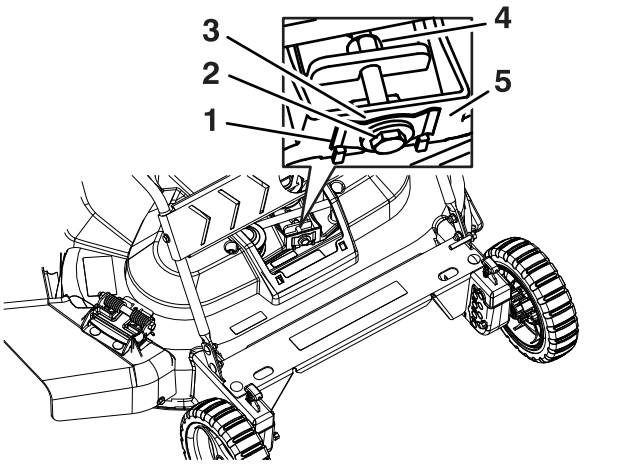

Figure 28

1. Belt tension spring
2. Adjusting bolt
3. Gap
4. Adjusting nut
5. Frame

Important: Do Not overtighten the adjusting bolt. This could damage the blade drive belt.

6. Reinstall the belt access panel and rotate the screws a quarter-turn to lock into place.
7. Connect the wire to the spark plug.

Change Blade Brake Clutch (BBC) Belt

Service Interval: Every 250 hours

1. Stop the engine and wait for all moving parts to stop.
2. Disconnect the wire from the spark plug.
3. Remove and retain the front belt cover and its four bolts. Remove any debris under the cover.
4. Remove and retain the BBC bracket and its mounting hardware.
5. Loosen the cable clamp screw on the BBC cable and remove the old belt (refer to Figure 36).
6. Install the new belt.
7. Reinstall the BBC bracket.
8. Adjust the BBC cable as described in **Adjusting the Blade Brake Cable** in the Adjustments section.
9. Reinstall the front belt cover.

Change Blade Drive Belt

Service Interval: As required

1. Stop the engine and wait for all moving parts to stop.
2. Disconnect the wire from the spark plug.
3. Remove and retain the front belt cover and its four bolts. Remove any debris under the cover.
4. Remove and retain the BBC bracket and its mounting hardware. Remove the BBC belt from the front LH pulley.
5. Loosen the blade drive adjusting bolt (refer to Figure 28).
6. Remove and retain the fixed idler pulley and its hardware (see Figure 29).

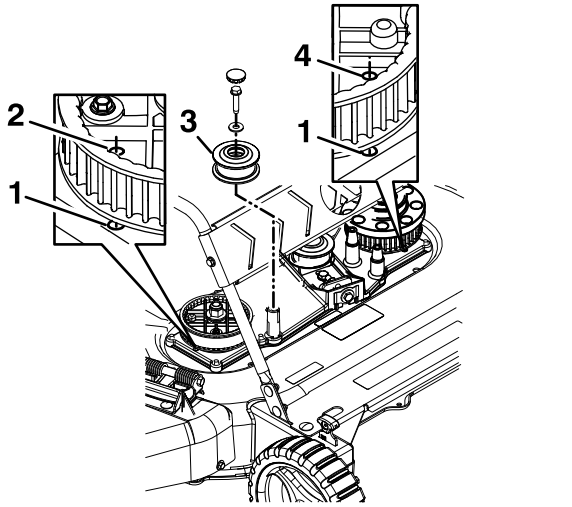

Figure 29

1. Hole in deck
2. RH sprocket hole
3. Fixed idler
4. LH sprocket hole (BBC idler removed for clarity)

7. Remove the blade drive belt.
8. Align the holes in the RH and LH sprockets with the holes in the deck as shown in Figure 29. Hold the sprockets in place with a rod or screwdriver.
9. Once the sprockets are locked into place, reinstall the blade drive belt and the fixed idler pulley.

Note: Make sure the teeth are engaged in the sprockets.

10. Tighten the belt tension to the recommended settings; refer to **Check the Blade Drive System**.
11. Remove the rod or screwdrivers from the sprockets.

12. Check the blades under the deck to make sure they are properly aligned; refer to **Check the Mower Blade** section.
13. Reinstall the BBC belt and the BBC bracket.
14. Reinstall the belt cover using the four bolts.
15. Connect the wire to the spark plug.
16. Check the operation of the blade control lever and the blade brake clutch.

Change Transmission Belt

Service Interval: Every 250 hours

1. Shut off the engine and wait for all moving parts to stop.
2. Disconnect the wire from the spark plug.
3. Remove the four bolts that hold the belt cover to the machine housing.

   Note: Save the bolts for installing the belt cover to the machine housing.
4. Remove the belt cover.
5. Remove any debris from under the belt cover.
6. If the grass bag is on the machine, remove and retain it.
7. Raise and hold up the rear door.
8. Remove and retain the rear panel and its mounting hardware.

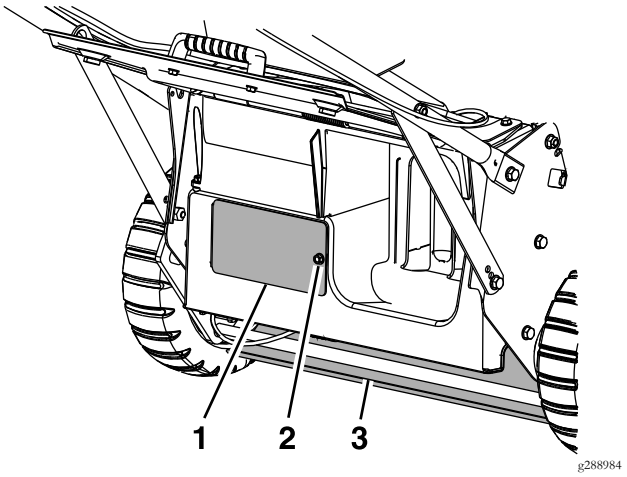

Figure 30

1. Rear panel
2. Hardware
3. Dust shield

9. Remove and retain the dust shield and its mounting hardware.
10. Remove the transmission belt.

A. Rotate the idler pulley over the access hole on the transmission by using a socket wrench to turn the idler pulley nut.

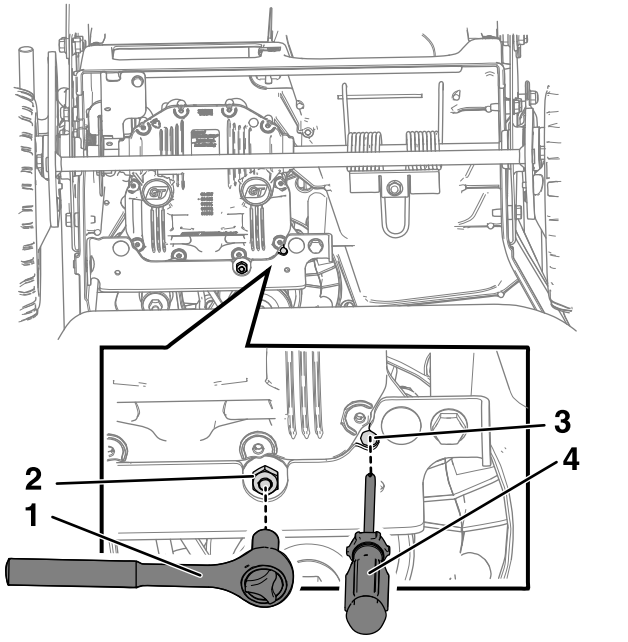

Figure 31

1. Socket wrench
2. Idler pulley nut
3. Idler pulley nut
4. Screwdriver

B. While you are holding the idler pulley over the access hole on the transmission, insert a screwdriver through the access hole to catch a rib on the idler pulley.

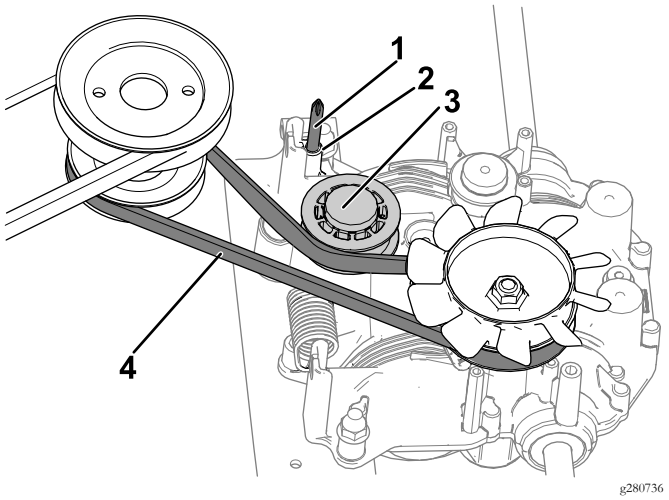

Figure 32

1. Screwdriver through access hole
2. Access hole
3. Idler pulley
4. Transmission belt

C. Use the screwdriver to hold the idler pulley out of the way until you are done installing the new transmission belt.

D. From the front of the machine, remove the belt from the engine pulley and then remove from the transmission pulley.

E. While the idler pulley is pulled out of the way, install the new transmission belt placing the belt over the transmission pulley first and then over the engine pulley.

F. Using a socket wrench to hold the idler pulley in position, remove the screwdriver from the access hole in the transmission and return the idler pulley to its tensioned position.

11. Ensure that the new transmission belt is positioned correctly.
12. Reinstall the rear panel and secure with its mounting hardware retained in step 8.

Check Spark Plugs

Service Interval: Every 100 hours

1. Stop the engine and wait for all moving parts to stop.
2. Disconnect the wire from the spark plug (see Figure 9).
3. Clean around the spark plug.
4. Remove the spark plug from the cylinder head.

   Note: Replace a cracked, fouled, or dirty spark plug. Do Not clean the electrodes because grit entering the cylinder can damage the engine.
5. Set the gap on the plug to 0.030 inch (0.76 mm) (Figure 33).

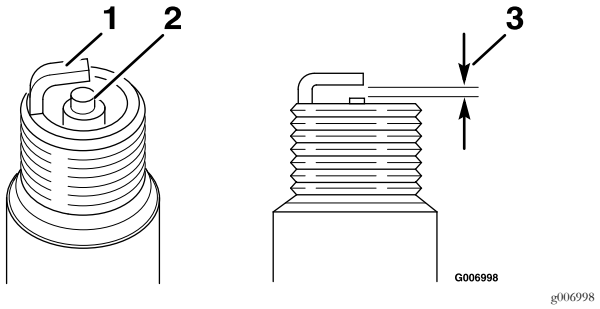

Figure 33

1. Side electrode
2. Center electrode insulator
3. Air gap—0.030 inch (0.76 mm)

6. Install the spark plug and the gasket seal.
7. Torque the plug to 17 ft-lb (23 N-m).
8. Connect the wire to the spark plug.

Emptying the Fuel Tank and Cleaning the Fuel Filter

Service Interval: Every 100 hours

The fuel filter (screen) element is located inside the fuel tank (if applicable).

1. Stop the engine and wait for it to cool down.

   Note: Drain gasoline for a cold engine only.
2. Disconnect the wire from the spark plug.
3. Close the fuel valve.
4. Disconnect the fuel line by loosening the tube clamp at the carburetor.
5. Open the fuel valve by turning the lever to the open position.
6. Drain the gasoline completely from the tank and fuel line into an approved fuel container.
7. Remove the fuel tank from the mower.
8. Close the fuel valve.
9. Pour a small amount of fuel in the fuel tank, move the fuel around in the tank, and pour it out into an approved fuel container.
10. Install the fuel tank and fuel line.

Change Fuel Filter

Service Interval: As required

A fuel filter is installed between the fuel tank and the engine. Replace when necessary.

Adjustments

Note: Wait for all moving parts to stop and remove spark plug wire before servicing, cleaning, or making any adjustments to the unit.

Adjusting the Self-Propel Drive

If the lawn mower does not self-propel or has a tendency to creep forward when the control bail is released, adjust the drive cable.

1. Stop the engine and wait for all moving parts to stop.
2. Loosen the cable support nut (Figure 34).

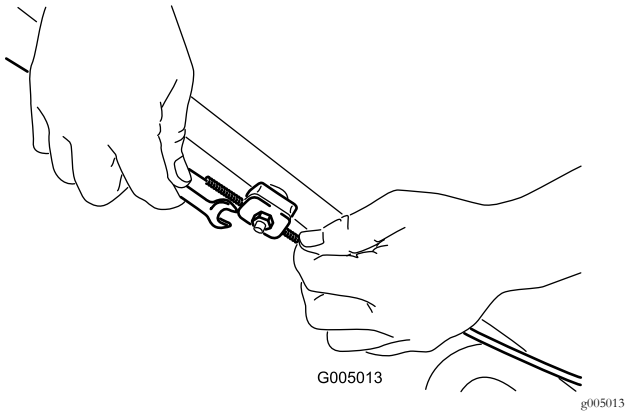

Figure 34

3. Pull down the cable jacket (toward the mower) until there is no slack in the cable (Figure 35).

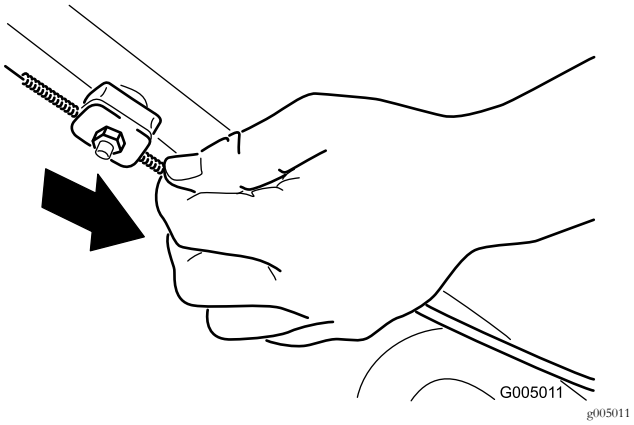

Figure 35

4. Tighten the nut on the cable support.
5. Check the operation for desired drive control.

Note: If the unit creeps forward without the bail engaged or if the wheels spin when you lift the rear wheels off the ground, the cable is too tight; repeat steps 1 and 2.

Note: Adjustment to obtain desired ground speed at full bail travel may be made in order to accommodate slower speeds.

Adjusting the Blade Brake Cable

Adjust whenever a new blade brake cable assembly is installed or if the blade control lock lever does not operate properly or the BBC belt is replaced.

1. Stop the engine and wait for all moving parts to stop.
2. Disconnect the wire from the spark plug.
3. Remove and retain the front belt cover and its four bolts. Remove any debris under the cover.
4. Pull the cable until there is approximately 1/8 inch in slack. Do Not put tension on the spring.

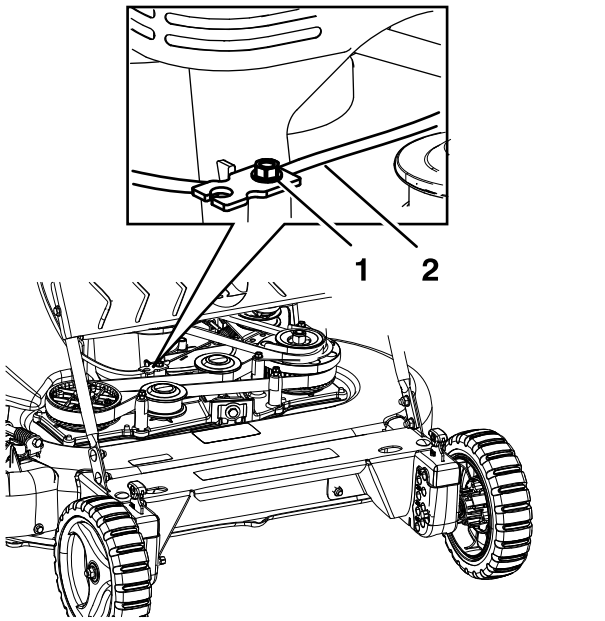

Figure 36

1. Cable clamp screw
2. Blade brake cable

5. Tighten the screw to lock the adjustment in place.
6. Reinstall the belt cover using the four bolts.
7. Connect the wire to the spark plug.

8. Check the operation of the blade control lock lever (see Figure 10). The lever must reset itself to lock out the blade control bail. If it does not, repeat steps 4 through 7.
9. Perform the **Checking the Blade Brake Clutch** procedure in Operation.

Adjusting the Parking-Brake Cable— If Equipped

Whenever you install a new parking-brake cable or if the parking brake is out of adjustment, adjust the parking-brake cable.

1. Disengage the parking brake.
2. Turn the adjustment nut counterclockwise to loosen the cable adjustment (Figure 37).

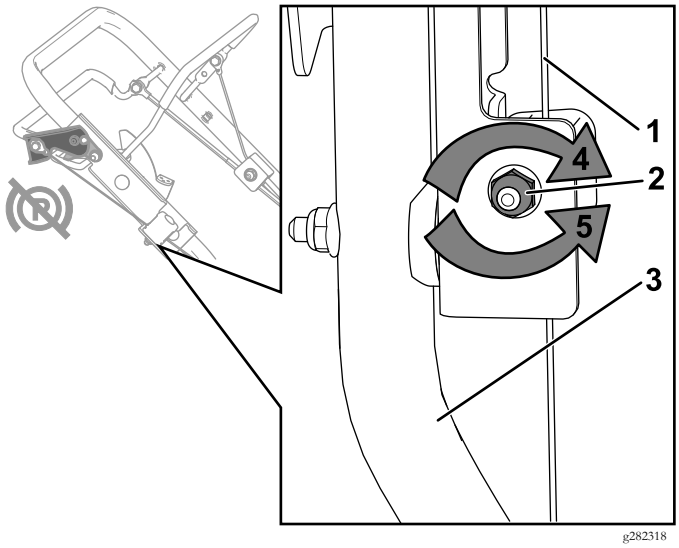

Figure 37

1. Parking-brake cable
2. Adjustment nut
3. Handle (right side)
4. Turn the nut clockwise to tighten the adjustment.
5. Turn the nut counterclockwise to loosen the adjustment.

3. Adjust the tension on the cable (Figure 37) by pulling or pushing the cable jacket and holding that position.

   Note: Pull the cable jacket toward the engine to increase tension (also increases brake clamp load); push the cable jacket away from the engine to decrease tension (also decreases brake clamp load).

Important: Adjust the cable jacket in small increments to avoid over tensioning. Over tensioning may cause the machine to not roll free even when the parking brake is disengaged. Correct tensioning allows the machine to roll free when the parking brake is disengaged and to hold position when the parking brake is engaged.

4. Turn the adjustment nut clockwise to tighten the cable adjustment.

Note: Tighten the nut firmly with a socket or wrench.

Cleaning

Cleaning and Storing Safety

- Park machine on level ground, set parking brake (if equipped), stop engine, and disconnect spark plug wire. Wait for all moving parts to stop before leaving the operator's position. Allow the machine to cool before servicing, adjusting, fueling, cleaning, or storing.
- Clean grass and debris from the cutting unit, muffler, drives, grass catcher, and engine compartment to prevent fires.
- Allow the machine to cool before storing the machine in any enclosure. Do not store the machine or fuel container, or refuel, where there is an open flame, spark, or pilot light such as on a water heater or other appliance.

Clean Engine and Exhaust System Area

Service Interval: Before each use or daily (May be required more often in dry or dirty conditions.)

⚠ CAUTION

Excessive debris around engine cooling air intake and exhaust system area can cause engine and exhaust system area to overheat which can create a fire hazard.

Clean all debris from engine and exhaust system area.

1. Stop engine, wait for all moving parts to stop, and remove spark plug wire.
2. Clean all debris from rotating engine air intake screen, around engine shrouding, and exhaust system area.
3. Wipe up any excessive grease or oil around the engine and exhaust system area.

Clean Grass Build-Up Under Deck

Service Interval: Before each use or daily

1. Stop engine, wait for all moving parts to stop, and remove spark plug wire.
2. To ensure the best performance, keep the underside of the lawn mower housing clean.

⚠ CAUTION

The mower may dislodge material from under the mower housing.

- **Wear eye protection.**
- **Stay in the operating position (behind the handle).**
- **Do Not allow bystanders in the area.**

Washing Method

1. Position the lawn mower on a flat concrete or asphalt surface near a garden hose.
2. Start the engine.
3. Hold the running garden hose at handle level and direct the water to flow on the ground just in front of the right rear tire (Figure 38).

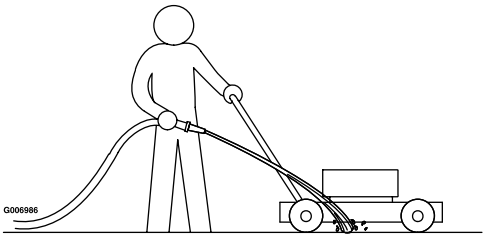

g006986

Figure 38

4. Engage the blade.

   Note: The blade will draw in water and wash out clippings. Let the water run until you no longer see clippings being washed out from under the housing.
5. Disengage the blade, stop the engine and wait for all moving parts to stop.
6. Turn off the water.
7. Start the lawn mower, engage the blade, and let the lawn mower run for a few minutes to dry out its components.

Scraping Method

If washing does not remove all debris from under the lawn mower, scrape it clean.

1. Disconnect the wire from the spark plug.
2. Drain the fuel from the fuel tank. Refer to **Emptying the Fuel Tank and Cleaning the Fuel Filter** section.
3. Tip the lawn mower onto its right side.
4. Remove the dirt and grass clippings with a hardwood scraper. Avoid burrs and sharp edges.
5. Turn the lawn mower upright.
6. Fill the fuel tank.
7. Connect the wire to the spark plug.

Cleaning the Discharge Tunnel and Plug

Service Interval: Before each use or daily

Always be sure that the discharge tunnel door closes securely when you release the handle. If the debris prevents the discharge door from closing securely, clean the inside of the discharge tunnel and the door thoroughly.

⚠ WARNING

Grass clippings and other objects can be thrown from an open discharge tunnel. Thrown objects can cause serious injury or kill the operator or bystanders.

Never start or operate the lawn mower unless one of the following is true:

- **Mulch Mode:**
  - **Discharge tunnel plug is locked securely in the discharge tunnel.**
  - **Side discharge cover is locked in place.**
  - **Discharge tunnel door is closed against frame.**
- **Bag Mode:**
  - **Discharge tunnel plug is removed.**
  - **Grass bag is locked in place.**
  - **Discharge tunnel door is closed against bag.**
  - **Side discharge cover is locked in place.**
- **Side Discharge Mode:**
  - **Discharge tunnel plug is locked securely in the discharge tunnel.**
  - **Discharge tunnel door is closed against frame.**
  - **Side discharge deflector is locked in place.**

Cleaning Under the Belt Access Panel

Service Interval: Every 50 hours

1. Stop the engine and wait for all moving parts to stop.
2. Disconnect the wire from the spark plug.
3. Remove and retain the belt access panel by rotating the screws a quarter-turn.
4. Brush out all the debris around the belt area.
5. Reinstall the belt access panel and rotate the screws a quarter-turn to lock into place.
6. Connect the wire to the spark plug.

Clean Debris From Machine

Service Interval: Before each use or daily

1. Stop the engine and wait for all moving parts to stop.
2. Clean off any oil, debris, or grass build-up on the machine and cutting deck, especially under deck belt shields, around the fuel tank, around engine and exhaust area.

Waste Disposal

Motor Oil Disposal

Engine oil is a pollutant to the environment. Dispose of used oil at a certified recycling center or according to your state and local regulations.

Storage

Preparing the Fuel System

To prepare the lawn mower for off season storage, perform the recommended maintenance procedures.

Store the lawn mower in a cool, clean, dry place. Cover the lawn mower to keep it clean and protected.

⚠ WARNING

Gasoline can vaporize if you store it over long periods of time. Gasoline vapors can explode if they come into contact with an open flame.

- **Do Not store gasoline over long periods of time.**
- **Do Not store the lawn mower with gasoline in the fuel tank or the carburetor in an enclosure with an open flame. (For example, a furnace or a water heater pilot light.)**
- **Allow the engine to cool before storing it in any enclosure.**

Empty the fuel tank when mowing the last time before storing the lawn mower.

1. Run the lawn mower until the engine stops from running out of fuel.
2. Prime the engine and start it again.
3. Allow the engine to run until it stops. When you can no longer start the engine it is sufficiently dry.

Preparing the Engine

1. While the engine is still warm, change the oil from the crankcase. Refer to **Change Engine Oil** section in Maintenance.
2. Remove the spark plug.
3. Using an oil can, add about one tablespoon of oil to the crankcase through the spark plug hole.
4. Slowly rotate the engine several times, using the starter rope, to distribute the oil.
5. Install the spark plug but **Do Not** connect the wire to the spark plug.

General Storage Information

1. Clean the lawn mower housing. Refer to **Cleaning Grass Build-Up Under Deck** section in Cleaning.
2. Clean any dirt and chaff from the cylinder, cylinder head fins, and blower housing.
3. Remove grass clippings, dirt, and grime from the external parts of the engine, the shrouding, and the top of the lawn mower housing.
4. Clean under the front belt cover. Refer to **Cleaning Under the Belt Access Panel** section in Cleaning.
5. Check the condition of the blade. Refer to **Check the Mower Blade** section in the Maintenance.
6. Service the air filter. Refer to **Servicing the Air Filter** in Maintenance.
7. Tighten all nuts, bolts, and screws.
8. Touch up all rusted or chipped paint surfaces with paint available from an Authorized Service Dealer.

Removing the Lawn Mower from Storage

1. Check and tighten all fasteners.
2. Remove the spark plug and spin the engine rapidly by pulling the starter rope to blow excess oil from the cylinder.
3. Clean the spark plug or replace it if it is cracked, broken, or if the electrodes are worn.
4. Install the spark plug and torque it to 17 ft-lb (23 N-m).
5. Perform any needed maintenance procedures.
6. Fill the fuel in the fuel tank with fresh gasoline.
7. Check the engine oil level.
8. Connect the wire to the spark plug.

Troubleshooting

Important: It is essential that all operator safety mechanisms be connected and in proper operating condition prior to mower use.

When a problem occurs, Do Not overlook the simple causes. For example: starting problems could be caused by an empty fuel tank.

The following table lists some of the common causes of trouble. If a problem continues, contact an Authorized Service Dealer.

Problem	Possible Cause	Corrective Action
Engine will not start, starts hard, or fails to keep running.	1. Fuel tank is empty. 2. Fuel shutoff valve is closed. 3. The throttle-choke-engine stop control is not in the correct position. 4. Dirt, water, or stale fuel is in the fuel system. 5. Faulty spark plug. 6. Spark plug wire is not connected. 7. Dirt in fuel filter.	1. Fill the fuel tank. 2. Open the fuel shutoff valve. 3. Move the control to the Choke position. 4. Contact an Authorized Service Dealer. 5. Clean, adjust or replace spark plug. 6. Check the spark plug wire connection. 7. Replace fuel filter.
Engine loses power.	1. Air cleaner is dirty. 2. Oil level in the crankcase is low. 3. Vent hose is plugged. 4. Dirt in fuel filter. 5. Dirt, water, or stale fuel is in the fuel system. 6. The underside of the lawn mower deck contains clippings and debris.	1. Clean or replace the air cleaner element. 2. Add oil to the crankcase. 3. Clean or replace the vent hose. 4. Replace the fuel filter. 5. Contact an Authorized Service Dealer. 6. Clean the underside of the lawn mower deck.
Engine runs rough.	1. The wire is not connected to the spark plug. 2. Faulty spark plug. 3. The throttle-choke-engine stop control is not in the Fast position. 4. The air filter element is dirty and is restricting the air flow. 5. Dirt in fuel filter.	1. Connect the wire to the spark plug. 2. Clean, adjust or replace spark plug. 3. Move the control to the Fast position. 4. Clean the air filter pre-cleaner and/or replace the paper air filter. 5. Replace the fuel filter.
Lawn mower or engine vibrates excessively.	1. The blade(s) is bent or is out of balance. 2. The blade mounting bolt is loose. 3. The underside of the lawn mower deck contains clippings and debris. 4. The engine mounting bolts are loose. 5. Loose engine pulley, idler pulley, or blade pulley. 6. Engine pulley is damaged. 7. Blade spindle is bent. 8. Belt is damaged.	1. Balance the blade(s). If the blade(s) is bent, replace it. 2. Tighten the blade mounting bolt. 3. Clean the underside of the lawn mower deck. 4. Tighten the engine mounting bolts. 5. Tighten the appropriate pulley. 6. Contact an Authorized Service Dealer. 7. Contact an Authorized Service Dealer. 8. Install new belt.
Uneven cutting pattern.	1. All four wheels are not at the same height. 2. The blade(s) is dull. 3. Mowing in the same pattern repeatedly. 4. The underside of the lawn mower deck contains clippings and debris. 5. Blade spindle is bent.	1. Place all four wheels at the same height. 2. Sharpen and balance the blade(s). 3. Change the mowing pattern. 4. Clean the underside of the lawn mower deck. 5. Contact an Authorized Service Dealer.

Problem	Possible Cause	Corrective Action
Discharge chute plugs.	1. The throttle-choke-engine stop control is not in the Fast position. 2. Cutting too much grass in one pass 3. Mowing too fast. 4. The grass is wet. 5. The underside of the lawn mower deck contains clippings and debris.	1. Move the control to the Fast position. 2. Raise the cutting height. If necessary, cut a second time at lower cutting height. 3. Slow down. 4. Allow the grass to dry before mowing. 5. Clean the underside of the lawn mower deck.
Lawn mower does not self-propel.	1. The self-propel drive cable is out of adjustment or is damaged. 2. There is debris under the frame. 3. Check belt for damage.	1. Adjust the self-propel drive cable. Replace the cable if necessary. 2. Clean the debris from under the frame. 3. Replace belt.
Blades do not rotate or slip.	1. BBC belt or timing belt is worn, loose, or broken. 2. BBC belt is off pulley. 3. BBC cable is worn, loose, or broken.	1. Adjust BBC cable; adjust timing belt tension. Replace if necessary. 2. Check belt for damage; replace if necessary. 3. Adjust BBC cable; replace if necessary.
Blades contacting each other.	1. Blades are installed or aligned incorrectly. 2. Blade adapters are worn, loose, or broken. 3. Timing belt is worn, loose, or broken. 4. Timing sprockets or idler pulley is worn, loose, or broken.	1. Reinstall blades. 2. Replace blade adapters. 3. Re-time blades and adjust timing belt tension; replace if necessary. 4. Replace sprockets or idler pulley if necessary.

California Proposition 65 Warning Information

What is this warning?

You may see a product for sale that has a warning label like the following:



WARNING: Cancer and Reproductive Harm—www.p65Warnings.ca.gov.

What is Prop 65?

Prop 65 applies to any company operating in California, selling products in California, or manufacturing products that may be sold in or brought into California. It mandates that the Governor of California maintain and publish a list of chemicals known to cause cancer, birth defects, and/or other reproductive harm. The list, which is updated annually, includes hundreds of chemicals found in many everyday items. The purpose of Prop 65 is to inform the public about exposure to these chemicals.

Prop 65 does not ban the sale of products containing these chemicals but instead requires warnings on any product, product packaging, or literature with the product. Moreover, a Prop 65 warning does not mean that a product is in violation of any product safety standards or requirements. In fact, the California government has clarified that a Prop 65 warning "is not the same as a regulatory decision that a product is 'safe' or 'unsafe.'" Many of these chemicals have been used in everyday products for years without documented harm. For more information, go to https://oag.ca.gov/prop65/faqs-view-all.

A Prop 65 warning means that a company has either (1) evaluated the exposure and has concluded that it exceeds the "no significant risk level"; or (2) has chosen to provide a warning based on its understanding about the presence of a listed chemical without attempting to evaluate the exposure.

Does this law apply everywhere?

Prop 65 warnings are required under California law only. These warnings are seen throughout California in a wide range of settings, including but not limited to restaurants, grocery stores, hotels, schools, and hospitals, and on a wide variety of products. Additionally, some online and mail order retailers provide Prop 65 warnings on their websites or in catalogs.

How do the California warnings compare to federal limits?

Prop 65 standards are often more stringent than federal and international standards. There are various substances that require a Prop 65 warning at levels that are far lower than federal action limits. For example, the Prop 65 standard for warnings for lead is 0.5 µg/day, which is well below the federal and international standards.

Why don't all similar products carry the warning?

- Products sold in California require Prop 65 labelling while similar products sold elsewhere do not.
- A company involved in a Prop 65 lawsuit reaching a settlement may be required to use Prop 65 warnings for its products, but other companies making similar products may have no such requirement.
- The enforcement of Prop 65 is inconsistent.
- Companies may elect not to provide warnings because they conclude that they are not required to do so under Prop 65; a lack of warnings for a product does not mean that the product is free of listed chemicals at similar levels.

Why does Exmark include this warning?

Exmark has chosen to provide consumers with as much information as possible so that they can make informed decisions about the products they buy and use. Exmark provides warnings in certain cases based on its knowledge of the presence of one or more listed chemicals without evaluating the level of exposure, as not all the listed chemicals provide exposure limit requirements. While the exposure from Exmark products may be negligible or well within the "no significant risk" range, out of an abundance of caution, Exmark has elected to provide the Prop 65 warnings. Moreover, if Exmark does not provide these warnings, it could be sued by the State of California or by private parties seeking to enforce Prop 65 and subject to substantial penalties.

Notes:

Service Record

Date:	Description of Work Done:	Service Done By:

MAXIMIZE THE PERFORMANCE OF YOUR EXMARK MACHINE.



EXMARK® PREMIUM ENGINE OIL

Exmark now offers a family of engine oil viscosities to perform well in any environment. Each viscosity has the same synthetic formulation to give you what you need in punishing conditions. We designed each grade to the highest quality, making it ideal even for diesel applications. Coupled with Exmark Premium Fuel Treatment, we have the performance products to make your machine hum.

EXMARK PREMIUM ENGINE OIL SAE 30/10W-30

- Meets zero shear requirements of a straight grade SAE 30 as well as the cold temp properties of a 10W-30.
- Most versatile oil in the industry.
- Superior corrosion protection over conventional oil - even in corrosive, humid environments.

EXMARK PREMIUM ENGINE OIL SAE 10W-50

- Full synthetic formulation gives you peak performance. Don't settle for less.
- Wide span multi-grade combines easy starting in cold weather with maximum protection in high temperature operation.
- Reduce friction & wear over standard mineral formulations.

EXMARK PREMIUM ENGINE OIL UTV FORMULATION

- 4-cycle high-temp formulation.
- Heavier viscosity, full synthetic, perfect for your UTV.

EXMARK PREMIUM ENGINE OIL SAE 20W-50

- Perfect for your big block engine, or any application in severe service.
- Same full synthetic formulation as all other Exmark Premium viscosities.
- Also effective for use in severe service small block engines.

EXMARK PREMIUM ENGINE OIL SAE 0W-40

- The perfect choice for when the weather turns cold or unpredictable, and your Exmark UTV has to perform.
- Commercial quality for severe service.
- Advanced additive package helps prevent corrosion from long-term storage.

EXMARK PREMIUM UTV EXTREME CONDITIONS GEAR OIL

- SAE 80W-90, designed to keep your UTV performing at its peak.
- Shear stable, hypoid gear lube.
- Includes a premium additive system to combat wear, oxidation, rust & corrosion.

Available from your local Exmark dealer. Find your closest dealer at exmark.com

EXMARK ACCESSORIES AND OPTIONS*

MID-MOUNT RIDING ACCESSORIES AND OPTIONS

CUSTOM RIDE SEAT SUSPENSION SYSTEM
FULL SUSPENSION SEAT
DECK LIFT ASSIST KIT
HITCH KIT
LIGHT KIT
12V POWER PORT
MICRO-MULCH SYSTEM
OPERATOR CONTROLLED DISCHARGE
SUN SHADE
TRASH CONTAINER
TURF STRIPER
ULTRA VAC COLLECTION SYSTEM
ULTRA VAC QUICK DISPOSAL SYSTEM

OUT-FRONT RIDING ACCESSORIES AND OPTIONS

CUSTOM RIDE SEAT SUSPENSION SYSTEM
DUAL-TAIL WHEEL
FLOOR PAN EXTENDER
HITCH KIT
LIGHT KIT
MICRO-MULCH SYSTEM
ROLL OVER PROTECTION SYSTEM (ROPS)
SNOW BLADE
SNOWBLOWER
SUN SHADE
TRASH CONTAINER
ULTRA VAC COLLECTION SYSTEM
ULTRA VAC QUICK DISPOSAL SYSTEM
WEATHER CAB

WALK-BEHIND ACCESSORIES AND OPTIONS

GRASS CATCHER
MICRO-MULCH SYSTEM
TURF STRIPER
STANDON

*Some accessories and options not available for some models.

Place Model No. and Serial No. Label Here (Included in the Literature Pack) or Fill in Below

Model No. _____

Serial No. _____

Date Purchased _____

Engine Model No. and Spec. No. _____

Engine Serial No. (E/No) _____

©2025 Exmark Mfg. Co., Inc.
415 Industrial Row
Beatrice, NE 68310
All Rights Reserved

Part No. 4507-783 Rev. B
(402) 223-6375
Printed in Mexico



www.exmark.com