ZLINE

ATTAINABLE **LUXURY®**

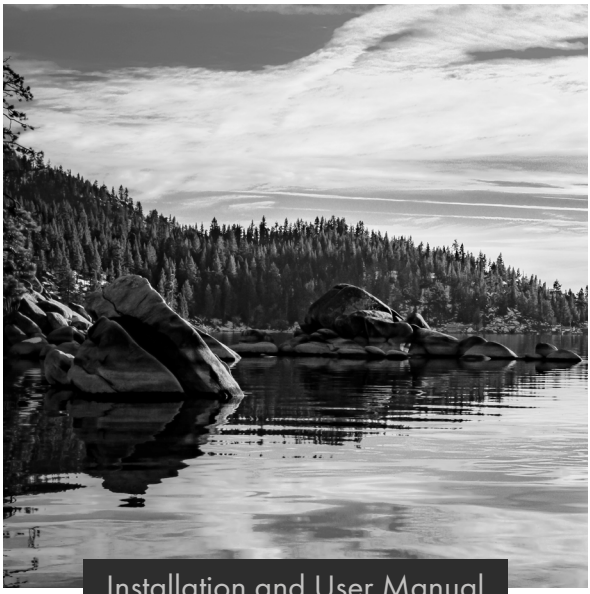

Installation and User Manual

BATH FAUCETS

zlinekitchen.com



ZLINE Kitchen and Bath provides Attainable Luxury, where the kitchen and bath of your dreams is never out of reach. Through our unique designs and unparalleled quality, we're dedicated to providing you an elevated experience in the heart of your home. With an endless selection of features and finishes, our inspiration is your reality.

ZLINE
ATTAINABLE **LUXURY**®



ZLINE is fueled by a passion for innovation; A relentless pursuit of bringing the highest end luxury designs and professional features into everyone's homes.

Because we continually strive to improve our products, we may change specifications and designs without prior notice.

Scan the QR code to view the most up-to-date version of the Installation Manual and User Manual.

⚠ WARNING: This product can expose you to chemicals including nickel, which is known to the State of California to cause cancer. For more information, go to www.P65Warnings.ca.gov.

TABLE OF CONTENTS

IMPORTANT SAFETY INFORMATION 1

SINGLE HANDLE & CENTERSET FAUCETS 3

Before Installation 3

Installation 4

DOUBLE HANDLE FAUCETS 9

Before Installation 9

Installation 10

WALL MOUNTED DOUBLE HANDLE FAUCETS 13

Before Installation 13

Installation 14

CARE AND MAINTENANCE 17

TROUBLESHOOTING 18

WARRANTY 19

IMPORTANT SAFETY INFORMATION

PRIOR TO INSTALLATION

- Make sure that the cold and hot water lines are turned off.
- Wrap all threaded connections with plumber's tape. Always wrap in a clockwise direction.
- Cover your drain to avoid losing parts.
- Do not disassemble the main faucet body, as it has been installed and commissioned correctly and precisely before delivery to the factory.
- To keep the faucet from jamming, remove the aerator and flush the water pipe before installation.

Operating conditions: Working pressure at 7 psi–120 psi (0.05 MPa–0.80 MPa) (including cold and hot water pressure) with applicable water temperature: 39.2 °F–194 °F (4 °C– 90 °C).

Water supply line length: 27 1/2" (699 mm)

INSTALLATION PREPARATION

1. Shut off the water and let the water in the current faucet drain.
2. The tools needed for each installation are included at the beginning of each section.
3. Loosen the hardware that keeps the current faucet in place. Remove faucet.

- If soldering the water connections when installing the faucet, remove the O-rings, cartridges, and washers before applying any heat.
- Protect your eyes when cutting or soldering.
- Do not over tighten screws/nuts. Finger tighten, then use a wrench/Phillips head screwdriver to tighten the fixing screw/nut until snug.

IMPORTANT SAFETY INFORMATION

TOOLS NEEDED:

- Wrench
- Phillips head screwdriver
- Pliers
- Drill
- Hole Saw
- Level
- Pencil
- Plumber's tape

TIME REQUIRED: +/- 45 minutes

LEGEND:


Hot water


Cold water


Grease


Warning


Plumber's tape

SINGLE HANDLE & CENTERSET FAUCETS
BEFORE INSTALLATION

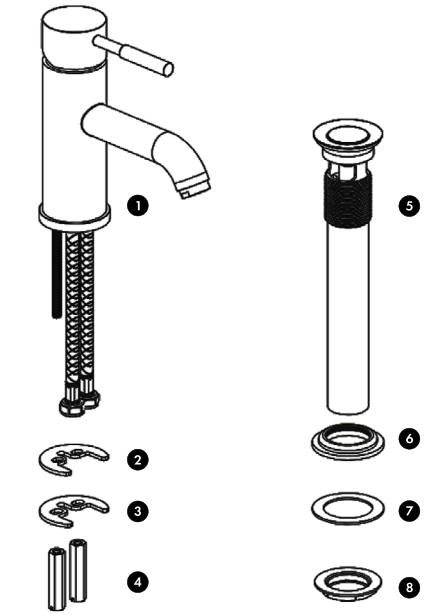

1. Body
2. Washer
3. Washer
4. Nut
5. Pop-up drain
6. Washer
7. Flat washer
8. Nut

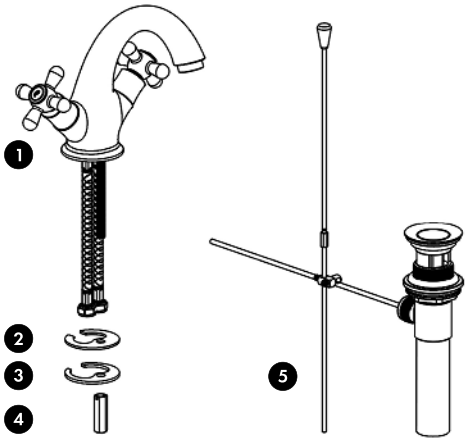

1. Body
2. Washer
3. Washer
4. Nut
5. Pop-up drain

SINGLE HANDLE & CENTERSET FAUCETS
INSTALLATION

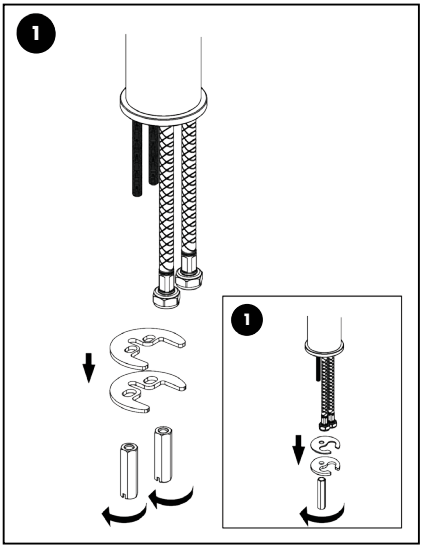

Loosen and remove the fixing nut and washers from the handles and set aside.

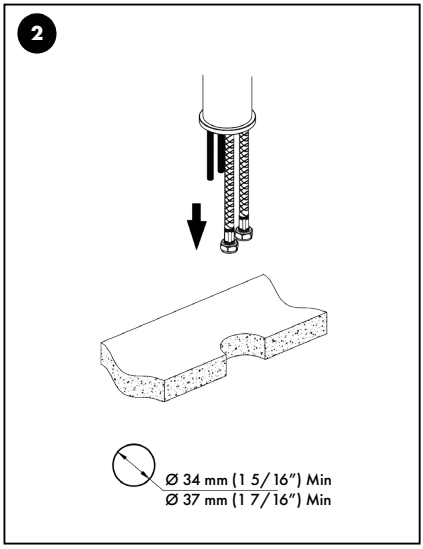

Mount faucet to countertop.

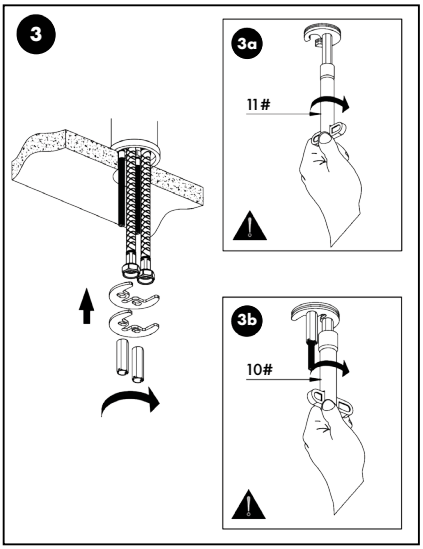

Install the washers under the countertop and tighten the fixing nuts.

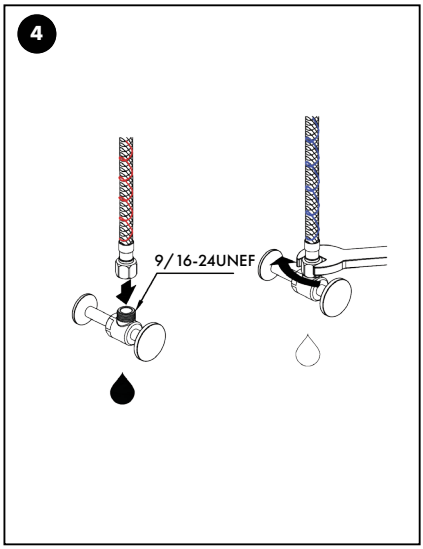

Secure the water lines to the corresponding water supply valves. Red (hot) and cold (blue).

SINGLE HANDLE & CENTERSET FAUCETS
INSTALLATION

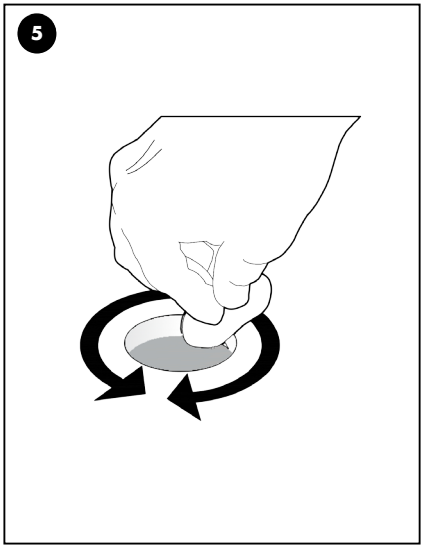

Clear area before inserting pop-up drain stopper.

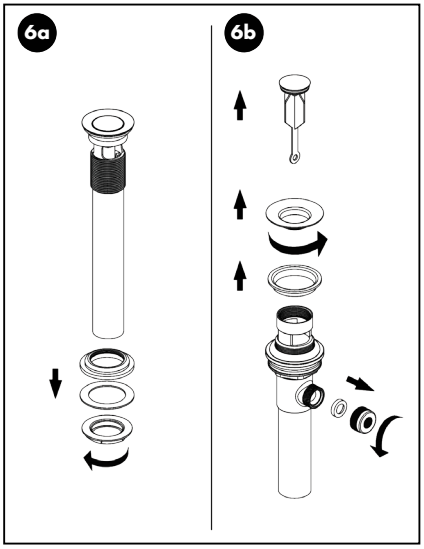

Remove the washers, nut, and flange from the pop-up drain.

SINGLE HANDLE & CENTERSET FAUCETS
INSTALLATION

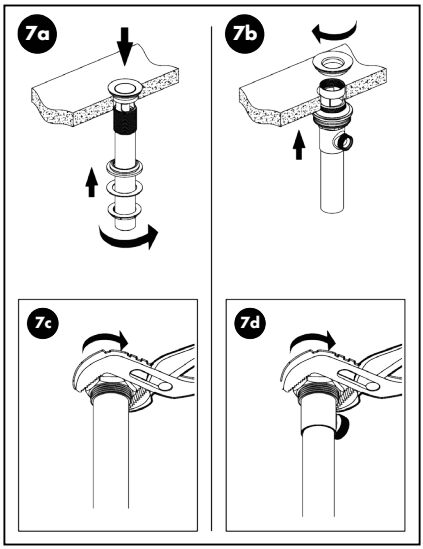

Insert the pop-up drain into the sink. Install the washers and tighten the nut underneath the sink to secure the pop-up drain in place. Once secured, reinstall the flange to be flush with the surface of the sink.

FOR MODELS WITH LIFT ROD
Set the flat rubber gasket over the drain hole in your sink, then insert the flange into the drain hole.

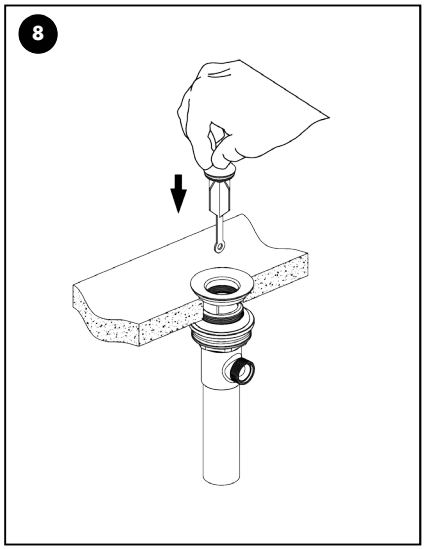

Insert the stopper tailpiece from above. Position the tailpiece hole to align with the hole to the side of the body.

SINGLE HANDLE & CENTERSET FAUCETS
INSTALLATION

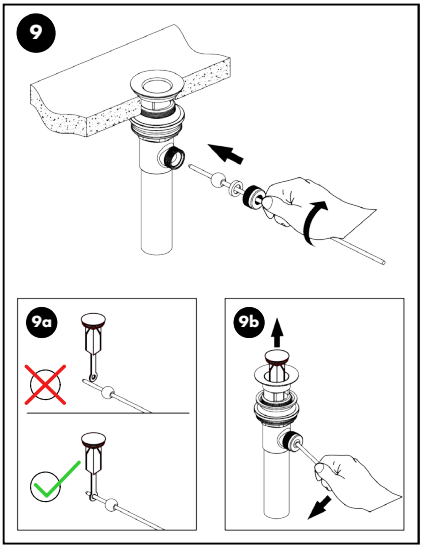

Connect the drain lever by threading it into the hole on the side of the body. The lever must pass through the hole in the stopper tailpiece to function properly.

Position the drain so that the lever is facing the back of the fixture, in line with the faucet's lift rod. (See step 10)

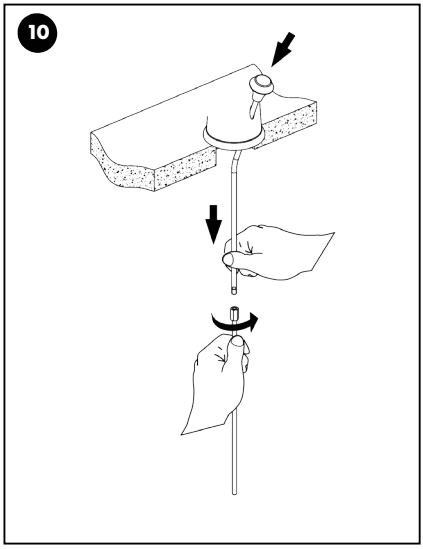

Insert the faucet's lift rod into its designated hole on the back of the faucet. Attach the extension rod.

SINGLE HANDLE & CENTERSET FAUCETS
INSTALLATION

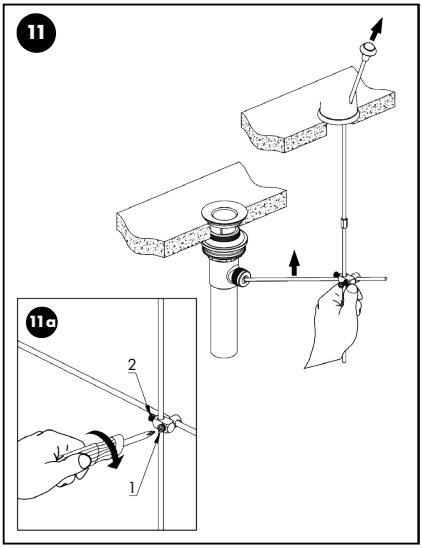

Connect the lift rod and the drain lever with the included attaching clip. Use a screwdriver to secure but do not overtighten the link.

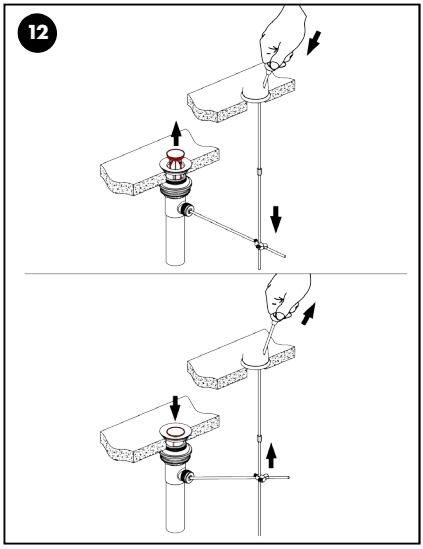

Once connected, to open the drain, push down. To close the drain, pull up. Fill your sink to check for any leaks and to ensure that the drain is functioning properly.

DOUBLE HANDLE FAUCETS
BEFORE INSTALLATION

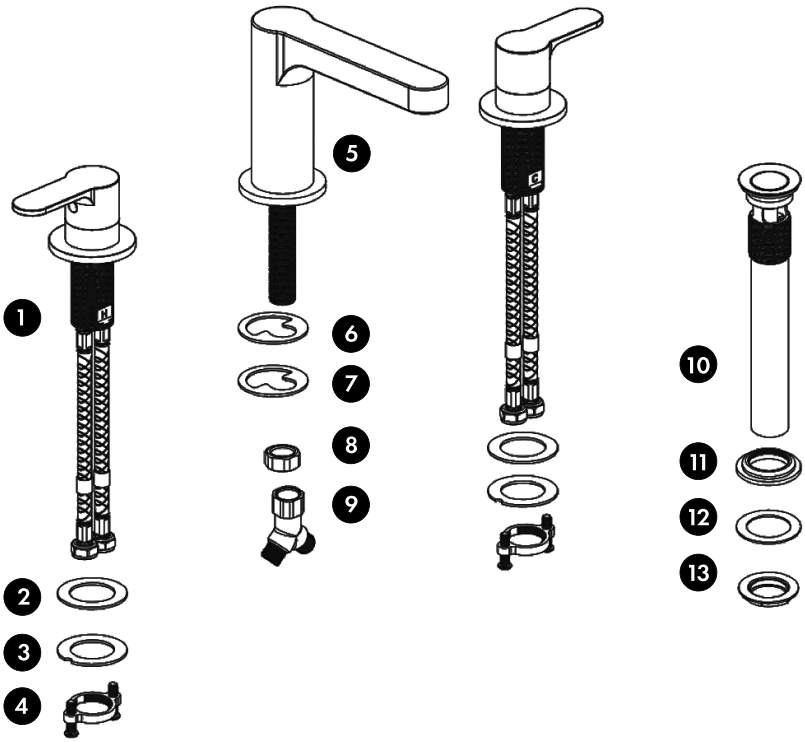

1. Faucet handle
2. Washer
3. Washer
4. Lock nut
5. Faucet body
6. Washer
7. Washer
8. Nut
9. Adapter
10. Pop-up drain
11. Washer
12. Flat washer
13. Nut

DOUBLE HANDLE FAUCETS
INSTALLATION

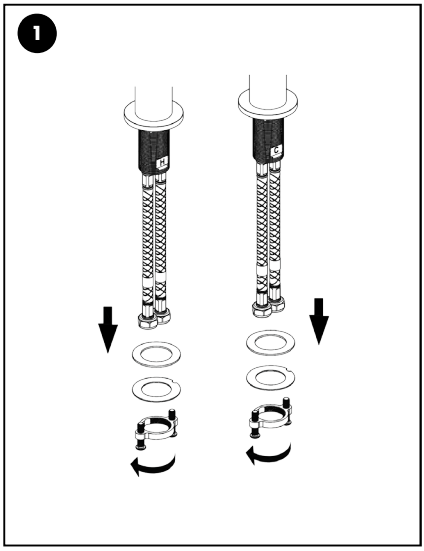

Remove washers and nuts from the handles.

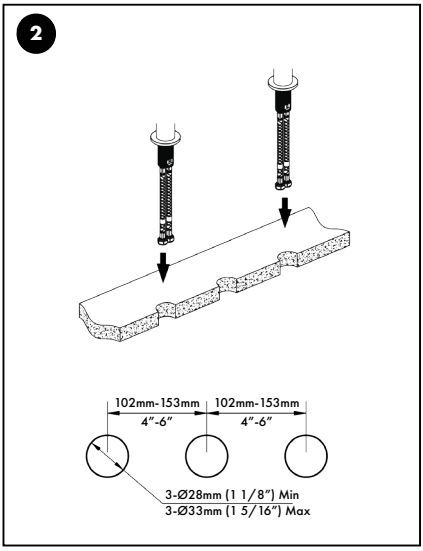

Using the template and a hole saw drill the mounting holes into the countertop making sure that the holes are level and properly aligned.

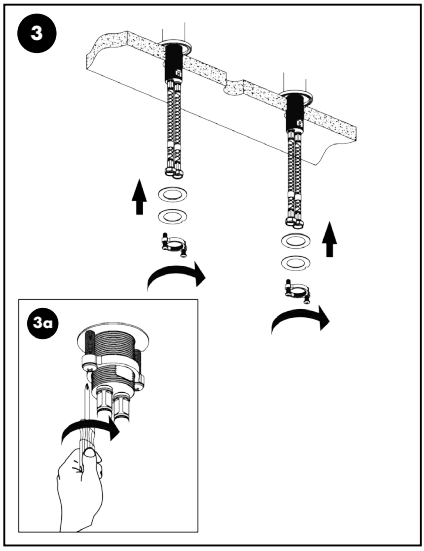

Insert the handles into the holes in the countertop and install the washers. Tighten the nut against the washers then tighten the screws to secure the handles. Ensure the alignment of the handles is correct.

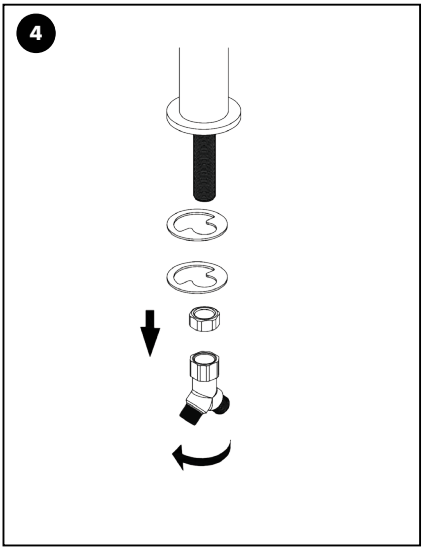

Remove the adapter, nut, and washers from the faucet body.

DOUBLE HANDLE FAUCETS
INSTALLATION

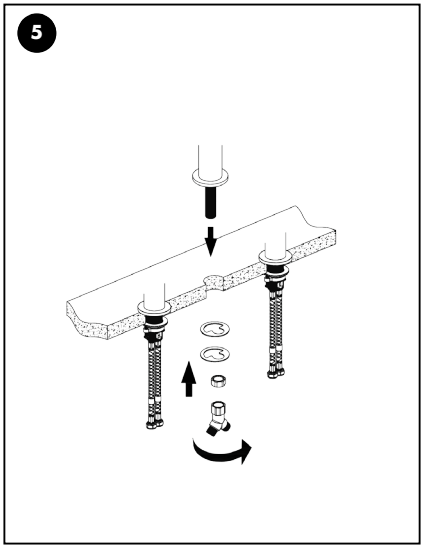

Insert the faucet body into the hole in the countertop and install the washers and tighten the nut against the washers. Thread the adapter back onto the faucet body.

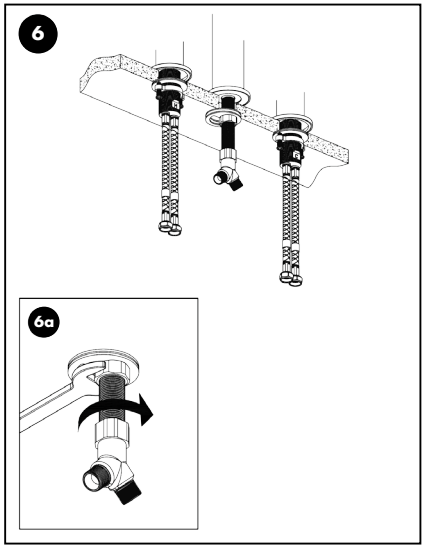

Use a wrench to tighten the nut securing the faucet body in place. Ensure the alignment of the faucet and sink is correct.

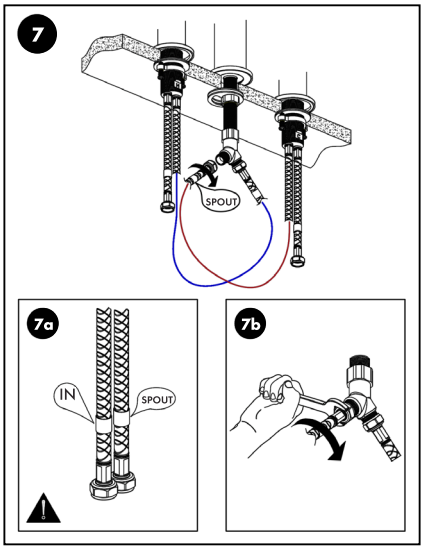

Connect the outlet lines from the handles to the adapter on the faucet body. Use a wrench to ensure they are tightened to prevent leaks.

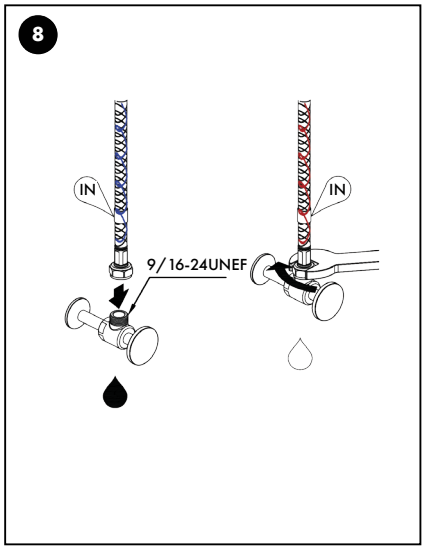

Connect the remaining water lines to the corresponding supply valves. Red (hot) and Cold (blue). Use a wrench to tighten and prevent leaks.

DOUBLE HANDLE FAUCETS
INSTALLATION

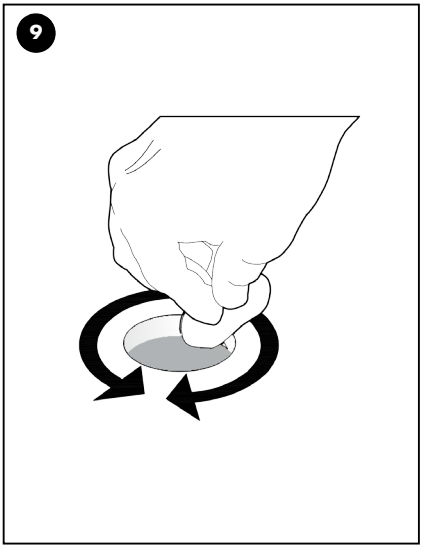

Clean the area where the pop-up drain will be installed to ensure a proper seal.

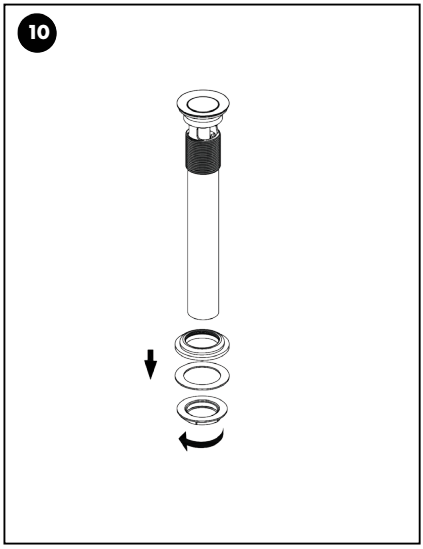

Remove the washers and nut from the pop-up drain.

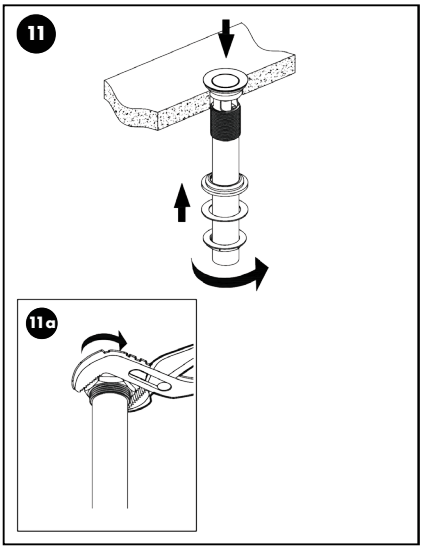

Insert the pop-up drain into the sink. Install the washers and tighten the nut against the washers.

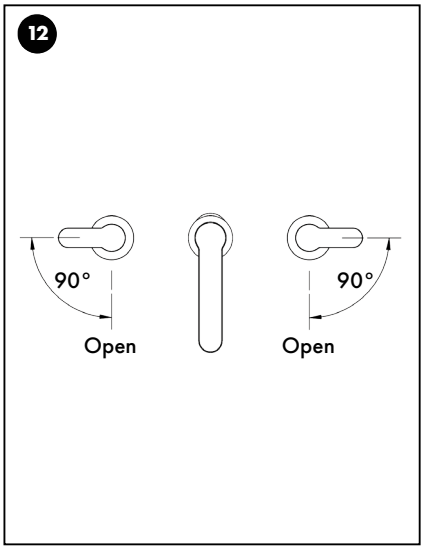

Check the alignment of the handles and faucet and adjust as necessary.

WALL MOUNTED DOUBLE HANDLE FAUCETS
BEFORE INSTALLATION

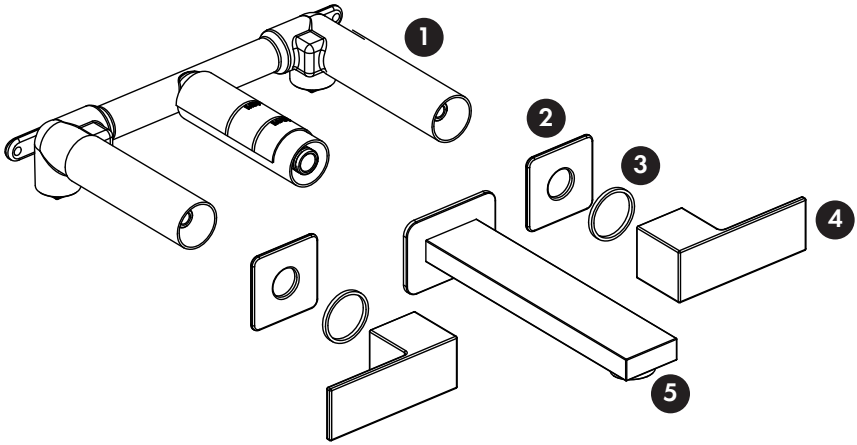

1. Rough-In
2. Faceplate
3. Washer
4. Handle
5. Spout

WALL MOUNTED DOUBLE HANDLE FAUCETS
INSTALLATION

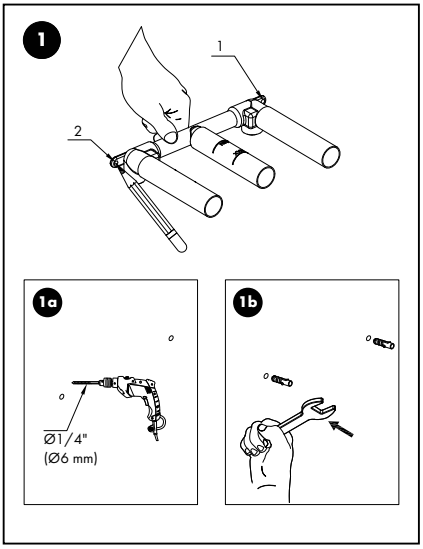

Measure and mark where the faucet will be installed. Use a level to ensure that the holes and faucet are level. Drill the mounting holes and insert the wall anchors.

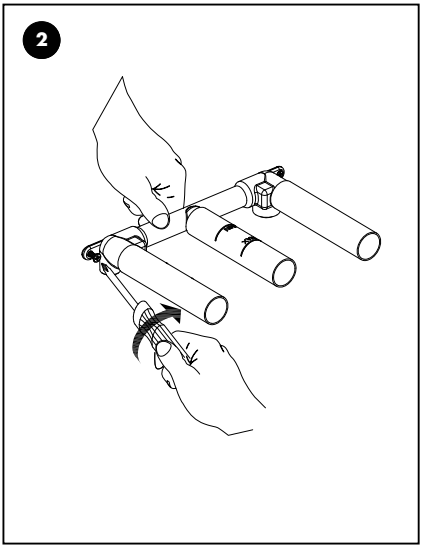

Install the rough in by tightening the screws into the wall anchors through the holes on the sides of the rough in.

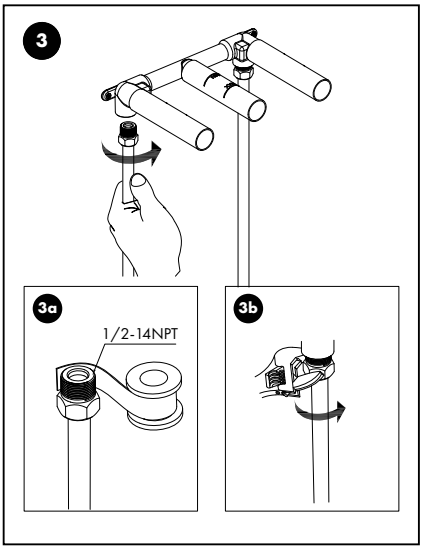

Connect the water lines to the rough in. Apply plumber's tape to the male threads in a clockwise direction to ensure there are no leaks.

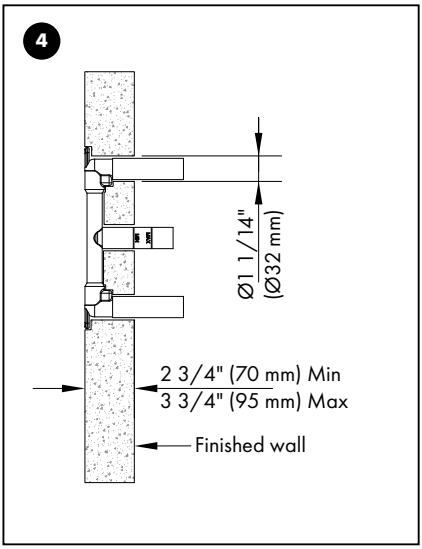

Use the minimum and maximum depth markings on the rough in to ensure that the finished wall and or tile does not impede the rest of the installation process.

WALL MOUNTED DOUBLE HANDLE FAUCETS
INSTALLATION

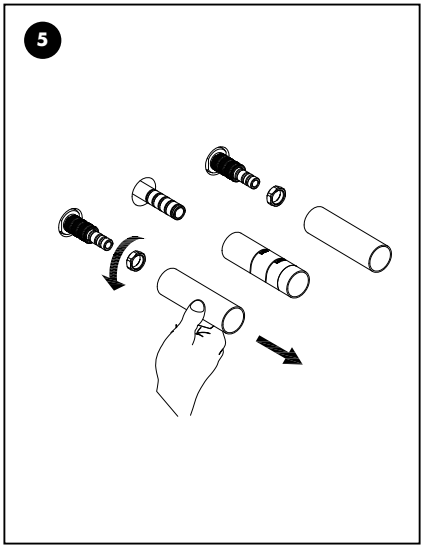

Remove the covers and nuts from the rough in.

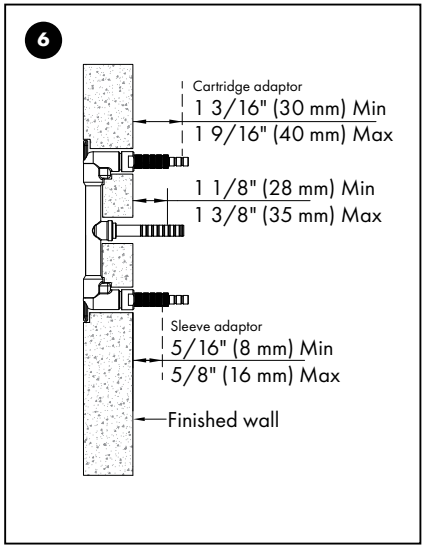

Measure the exposed rough in adapters and check that there is an appropriate distance from the finished wall and/or tile to complete the rest of the installation process.

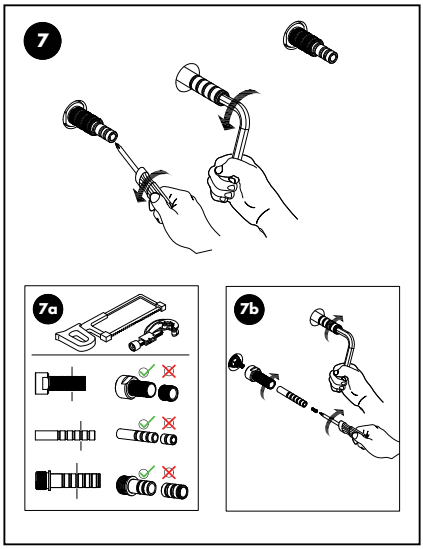

Use a hex wrench and screwdriver to adjust the shank positions as needed to ensure a flush fit once handles and spout are installed.

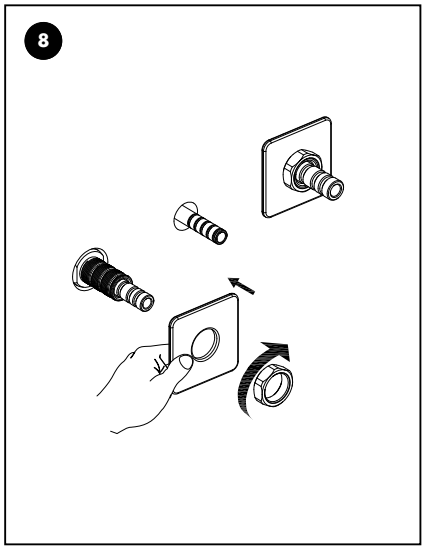

Install the faceplate and tighten the nut against it. Ensure that the faceplate remains level as the nut is tightened.

WALL MOUNTED DOUBLE HANDLE FAUCETS
INSTALLATION

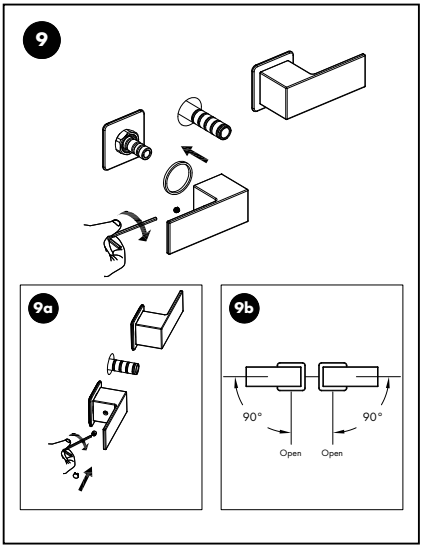

Install the washers and handles onto the exposed rough in. Once in place, use a hex wrench to tighten the set screw and secure the handle in place.

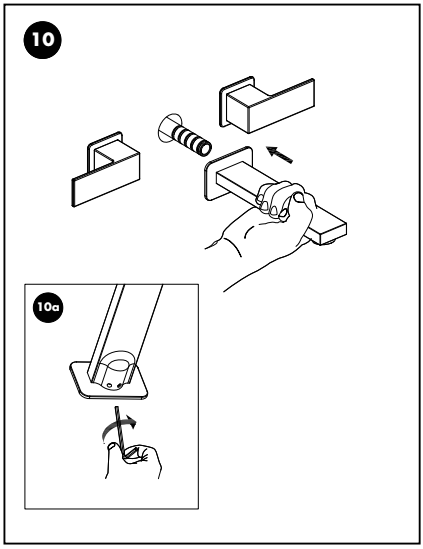

Slide the faucet over the exposed rough in and use a hex wrench to tighten the set screw securing the faucet in place.

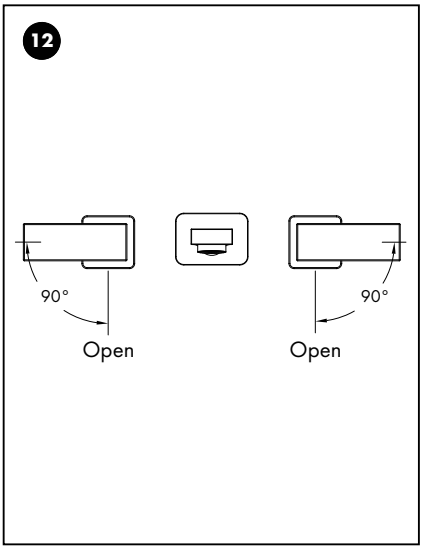

Remove the aerator and turn on the water to flush the system. Check the water connections for leaks.

CARE AND MAINTENANCE

To keep the product clean and shining, follow the steps below:

1. Rinse clean with water and dry with a soft cloth.
2. Do not clean with soaps, acid, polish, abrasives, or harsh cleaners.
3. Do not use cloths with a coarse surface.
4. Unscrew the aerator and clean when necessary.

TROUBLESHOOTING

PROBLEM	POSSIBLE CAUSE	SOLUTIONS
There is leakage under the handle.	The locking nut has come loose.	Unscrew the lever on the handle by hand. Loosen set screw with a hex wrench. Remove the handle and unscrew trim cap by hand. Tighten locking nut with an adjustable wrench.
Water will not shut off completely.	Cartridge may be defective.	Unscrew the lever on the handle by hand. Loosen set screw with a hex wrench. Remove the handle and unscrew trim cap by hand. Unscrew the locking nut with an adjustable wrench. Remove ceramic disc cartridge. Check for cracks.
There is a leak between the spray head and the hose.	The spray head may be loose or the washer is not seated correctly in the hose connection.	Tighten the spray head by hand until snug. Make sure the washer is seated correctly.

WARRANTY

COVERAGE

ZLINE Kitchen and Bath ("ZLINE") plumbing products have a limited lifetime warranty from the original purchase date for the original purchaser of the product.

ZLINE warranty periods begin from the original date of product delivery and solely cover the original purchaser of the product, delivered new and in its original carton. ZLINE will provide free-of-charge, non-consumable replacement parts for the components that failed due to manufacturing defects. It is the responsibility of the customer to install all replacement parts, as ZLINE does not perform service repairs on its plumbing products.

ZLINE's liability is limited to the original purchase price of the product. Additional injuries, losses, damages, or other inconveniences caused by product malfunction or defects in materials are not covered under the terms of this warranty.

TERMS

ZLINE warranties apply only to the original purchaser of a ZLINE product installed for normal residential use. This is defined as a single-family, residential dwelling in a non-commercial setting. Any warranty claim stemming from installation, operation, or any other use within a commercial setting is not covered under this limited warranty.

Commercial settings include, but are not limited to: schools, churches, hotels, restaurants, vacation rentals such as Airbnb, daycare centers, private clubs, fire stations, common areas in multi-family dwellings, nursing homes, food service locations, and institutional food service locations such as hospitals or correctional facilities.

This warranty is non-transferable and will not under any circumstance be extended based on the date of installation — the warranty period takes effect from the date of delivery and only covers the original purchaser. The warranty applies only to products installed in the contiguous United States and the District of Columbia.

Out-of-pocket payments will not be reimbursed for replacement parts unless prior approval is received from ZLINE. Unapproved out-of-pocket payments for parts will not be reimbursed. Out-of-pocket payments for any type of service will not be reimbursed, as ZLINE does not perform service repairs on its plumbing products. All warranty procedures must be followed to maintain warranty coverage.

WARRANTY

If ZLINE is unable to replace the defective part after a reasonable number of attempts, ZLINE reserves the right to offer to replace the product or provide the original purchaser a full refund of the purchase price of the product (not including installation, removal, or other charges that were not included in the original purchase price).

The original purchaser of the product must provide the original proof of purchase, including the purchase date, when filing a claim to obtain replacement parts or refunds. Additionally, the original purchaser of the product must provide the serial number of the product when filing a claim to obtain replacement parts or refunds.

This warranty shall not apply to any ZLINE product in which the original factory serial number has been removed, altered, or cannot be readily determined for any reason. Further, ZLINE is not responsible for damage resulting from, but not limited to: shipment, delivery, or improper installation; negligence or improper maintenance, misuse, or abuse of the product; unauthorized alteration, modification, or tampering with the product; accident, fire, floods, pest infestations, pandemics, natural disasters, or any other unpreventable or unexplained acts of nature, commonly referred to as "acts of God"; water leaks or water damages caused by improper water supply or water connections associated with installation or disassembly of the product; and service to correct installation not in accordance with the instructions contained in ZLINE's product manuals and/or with local government codes.

Additionally, this plumbing warranty does not apply to aesthetic damage, scratches, or natural wear caused by normal use; second-hand, open box products, or products purchased from an unauthorized retailer; consumable parts including, but not limited to, rough-in valves, aerators, diverter handles, sprayers, spouts, hoses, and flange covers; and damages, problems, or any type of performance-related issues stemming from alteration or tampering with the product, including, but not limited to, painting stainless steel, black stainless, Satin Stainless Steel, or any other finishes or any portion of the product's interior or exterior.

Information contained within ZLINE's installation and user manuals, in addition to product information included on ZLINE's website and all related digital listings, do not cover every possible condition and situation that may occur during the installation or operation of ZLINE products.

WARRANTY

ZLINE reserves the right to make changes at any time to its products when considered safe, necessary, and useful. Always check the ZLINE website for the most up-to-date version of its product manuals: www.zlinekitchen.com/pages/manuals.

Do not install or operate any ZLINE product if it has missing or broken parts or if it arrives damaged due to shipping. If ZLINE products arrive damaged, contact ZLINE Customer Experience at 1-614-777-5004 for help. Failure to report a damaged appliance prior to installation or operation may void the warranty. ZLINE does not perform service repairs on its plumbing products. ZLINE disclaims responsibility for damage or injury caused by improper installation or use of any of its products.

WARRANTY

CUSTOMER SERVICE AND PARTS INFORMATION

Please contact ZLINE Customer Service for questions and troubleshooting help at 1-614-777-5004 or visit www.zlinekitchen.com/contact to utilize our online Customer Experience Portal.

Scan the QR code to view the most up-to-date version of ZLINE's Installation and User Manuals.

Need to purchase a part or accessory for your ZLINE product? Visit www.zlineparts.com, ZLINE's official parts distribution partner.

4.0.1

zlinekitchen.com

1-614-777-5004

contact@zlinekitchen.com

ZLINE
ATTAINABLE **LUXURY**®