Uni Flip Table

Technical Assembly Installation



Uni Flip Table

TECHNICAL INSTALLATION

Recommended
2-person Step

* To prevent possible scratches or damage, assemble the table upside down on a soft surface such as a blanket, carpet or packaging.

* Attach Leg to the Top assembly by using Bolts, spring washer, flat washer. Tighten using the Allen Wrench provided.

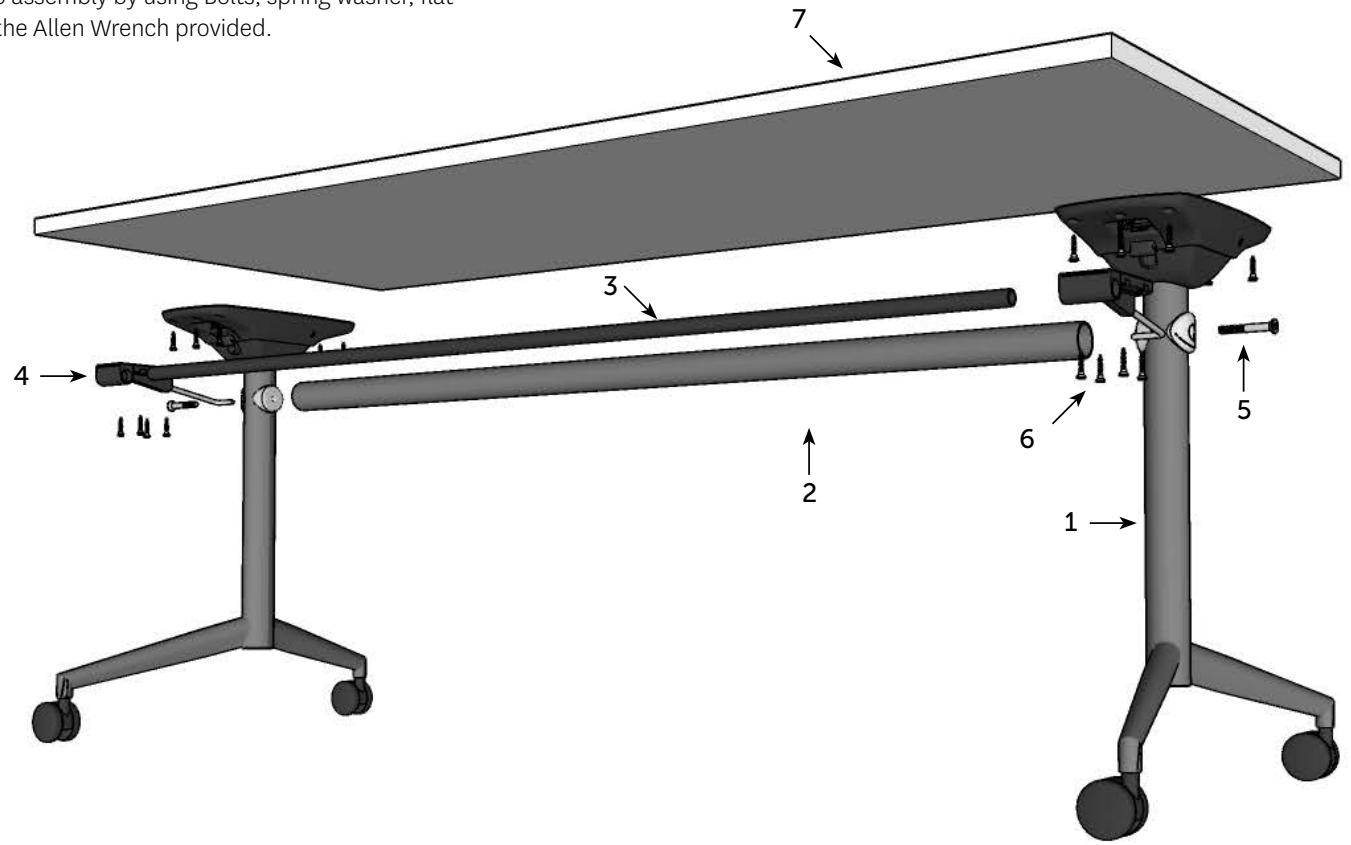

COMPONENTS

1 Uni Flip Table Frame Leg x 2
2 Drop-rail Cross Tube x 1
3 Pullbar x 1
4 Side-handle x 2
5 M8 x 80 Bolt x 2
6 M5 x 30 Wood Screw x 20 Table
7 Top x 1

Uni Flip Table

TECHNICAL INSTALLATION

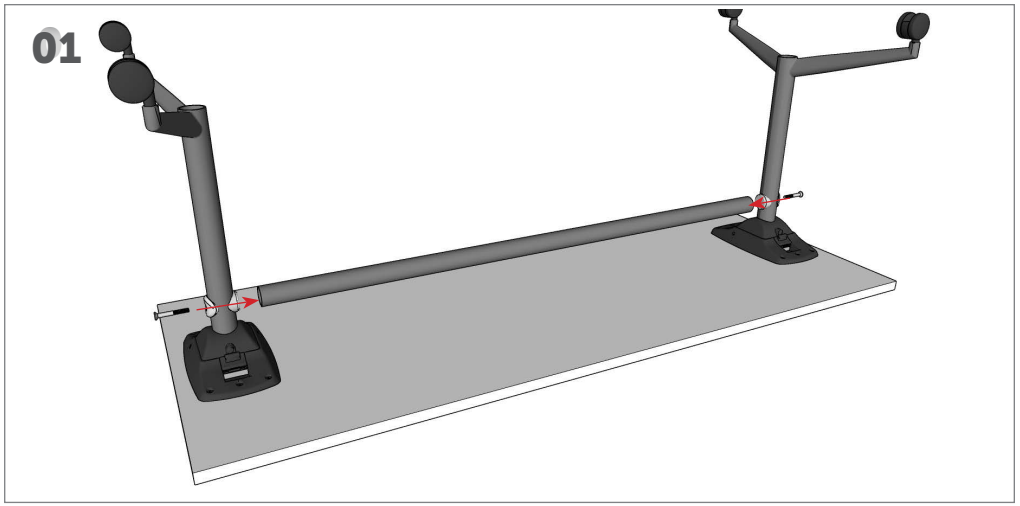

Place the drop-rail cross tube (45mm diameter) between the legs and fully tighten the M8x80 bolts through the plugs into the drop-rail. Making sure the notch in the end of the drop-rail cross tube is in-line with the bumps on the frames.

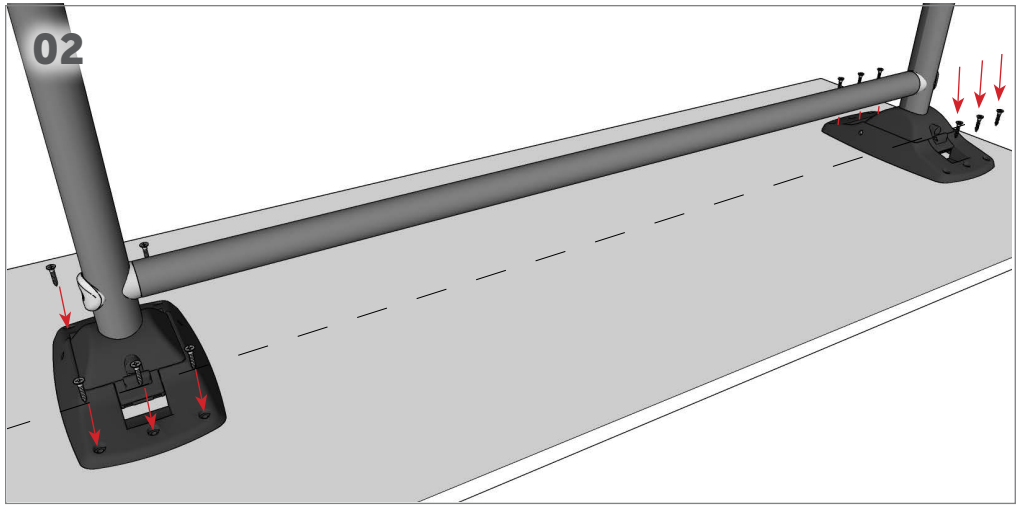

Pencil mark the centre-line of table top underside. Locate frame in the centre of worksurface and fully tighten using the M5x30 screws.

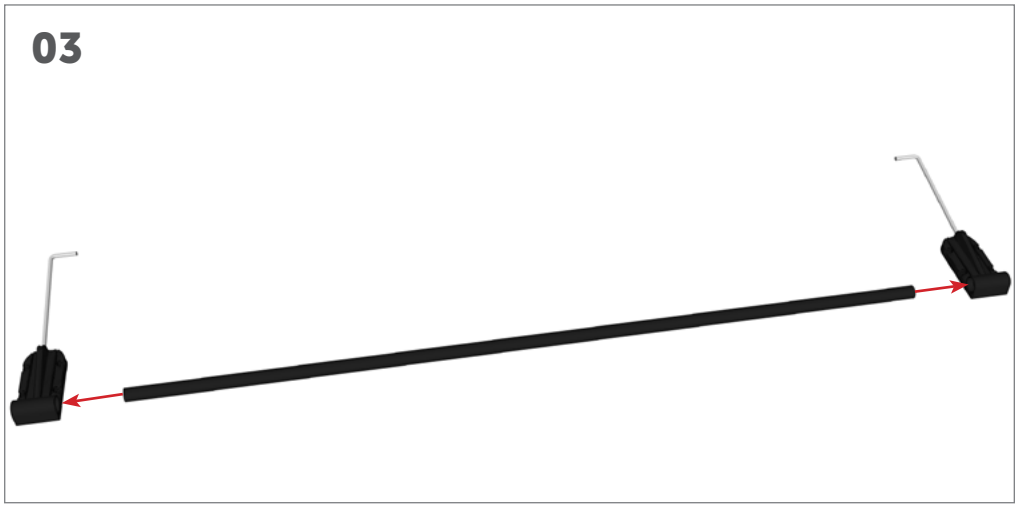

Fit the pullbar into the side-handles.

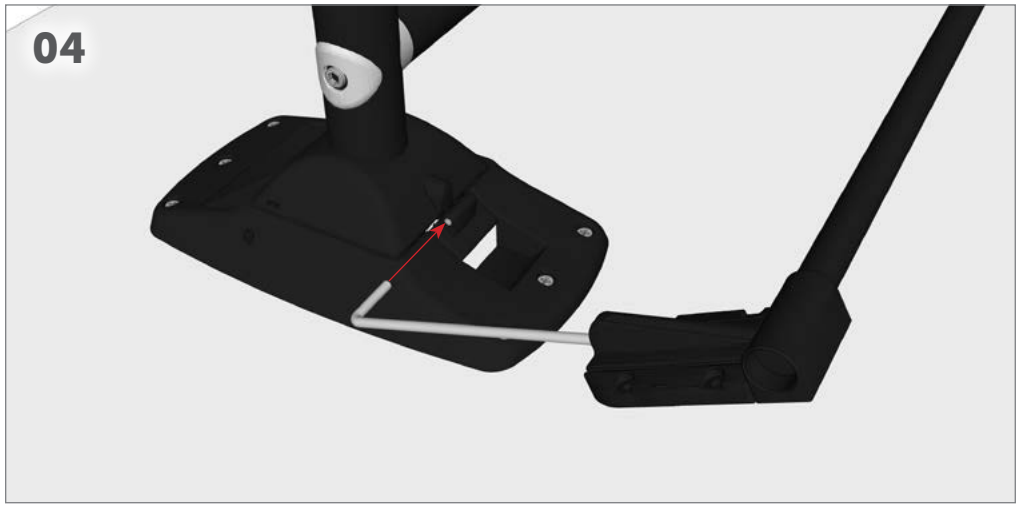

Hook the side-handle wires into the flip mechanism.

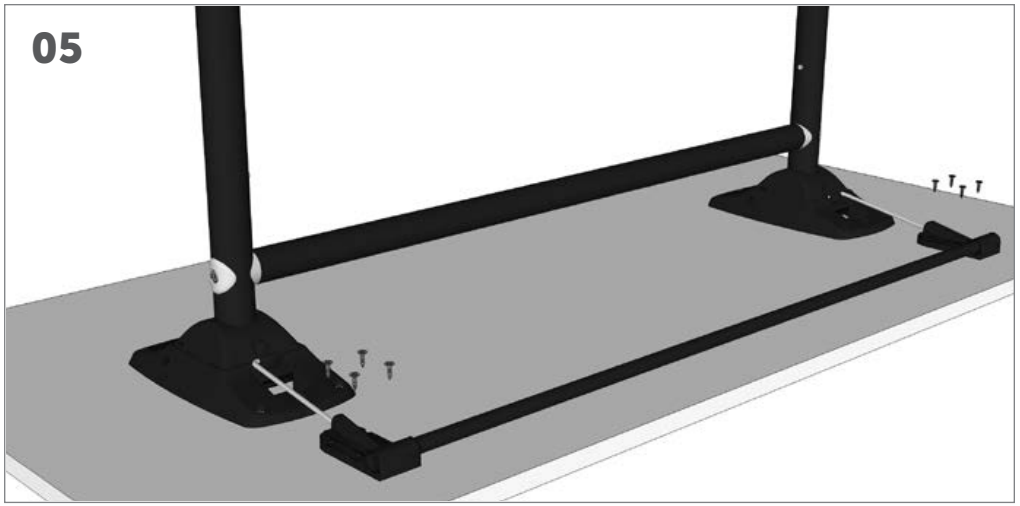

Screw fix the side-handles using M5x30 wood screws.



Uni Flip Table

TECHNICAL INSTALLATION

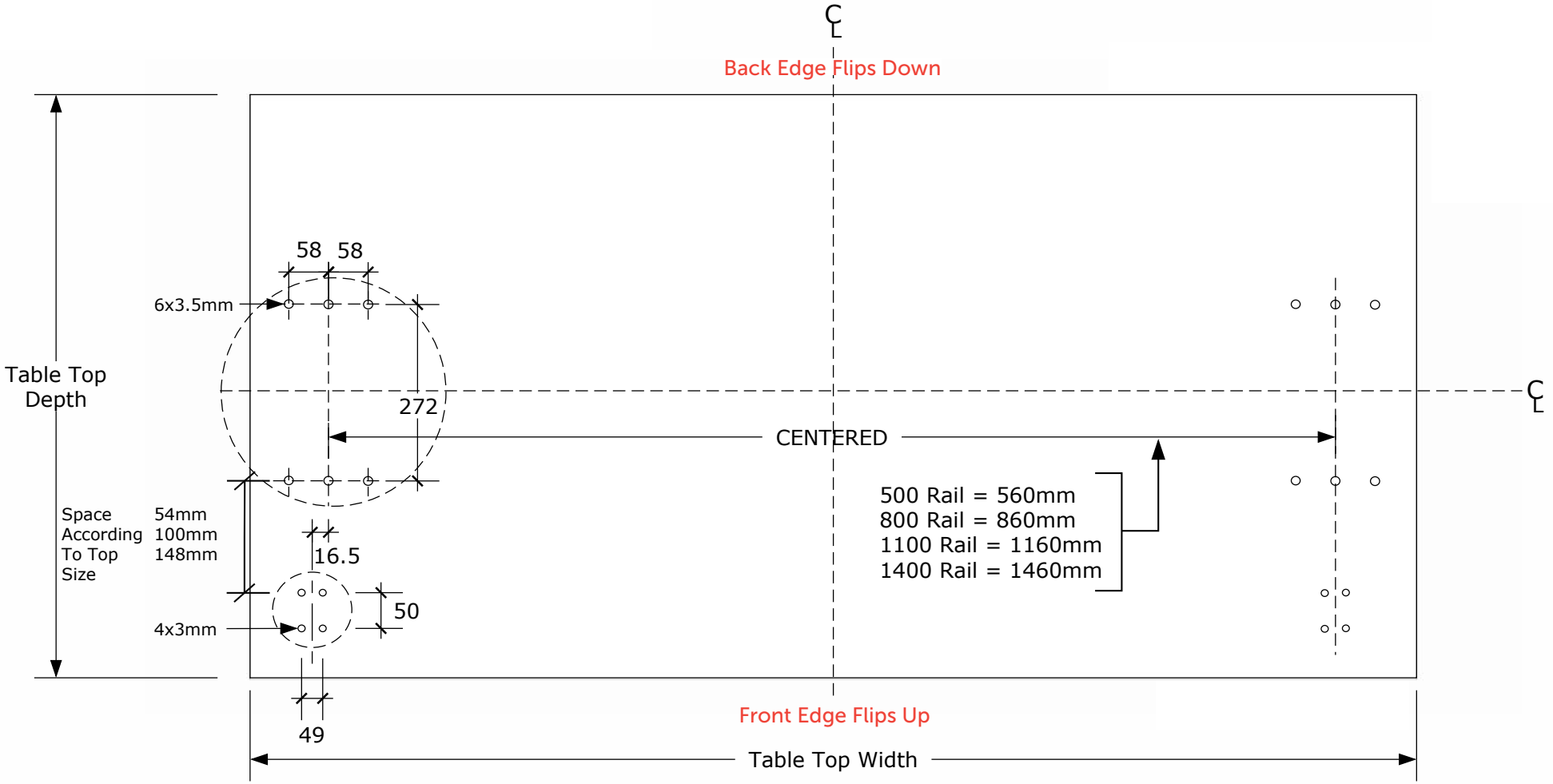

* Holes position fo mechanism and side-handles

Hole Position for Optional Connector Links

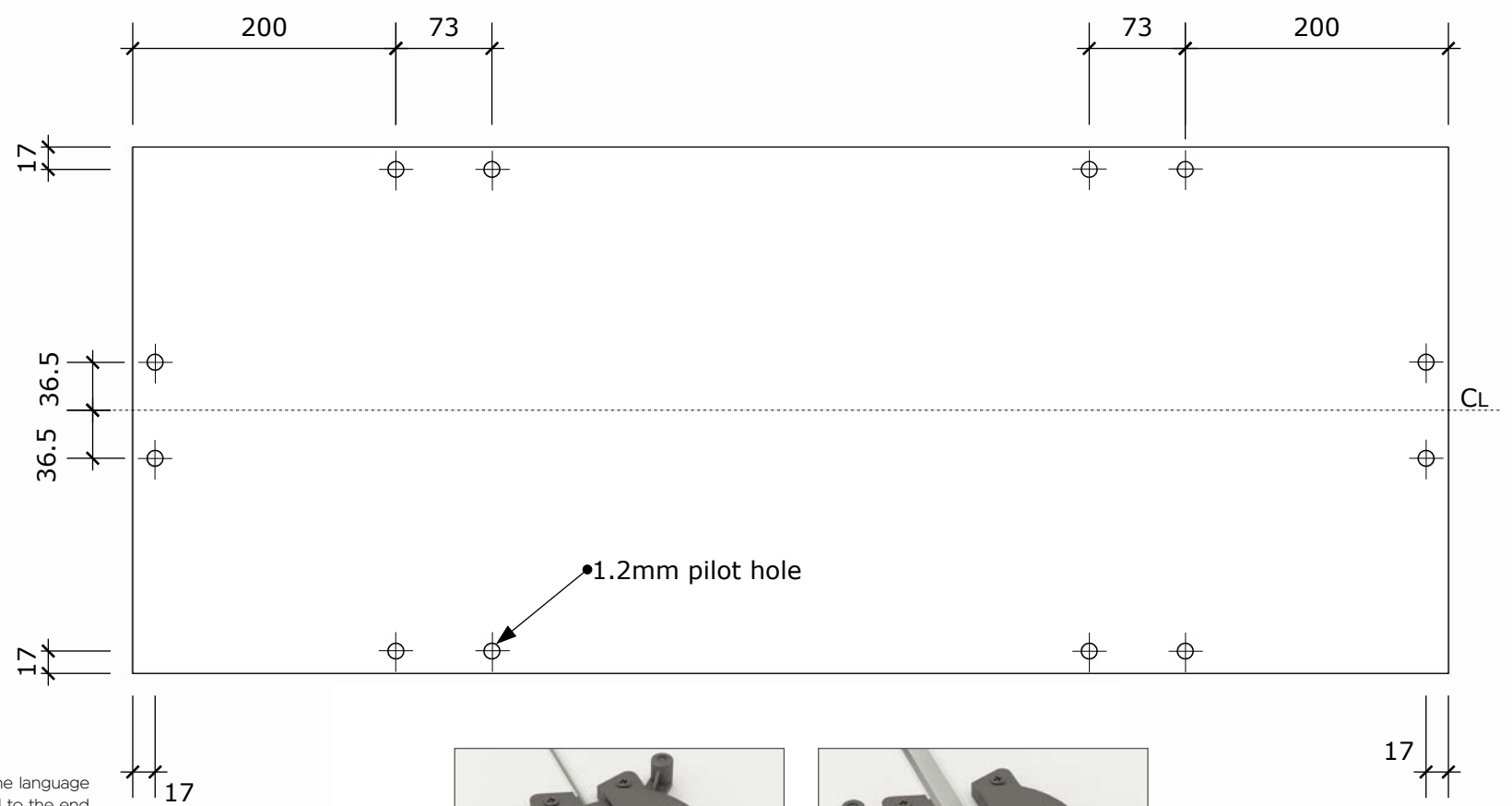

Care Instructions:

Information for use shall be available in the language of the country in which it will be delivered to the end user. It shall contain at least the following details:

a) Information regarding the intended use, See Annex C
b) Assembly instructions, where applicable
c) Instructions for the care and maintenance of the table.

Statement of Use:

Uni flip tables are designed for general commercial use in boardrooms, conference rooms & training rooms.



Locked connector link



Unlocked connector link