PRORUN®

20V/// Lithium-Ion

STRING TRIMMER

MODEL: PST120

Operator's Manual

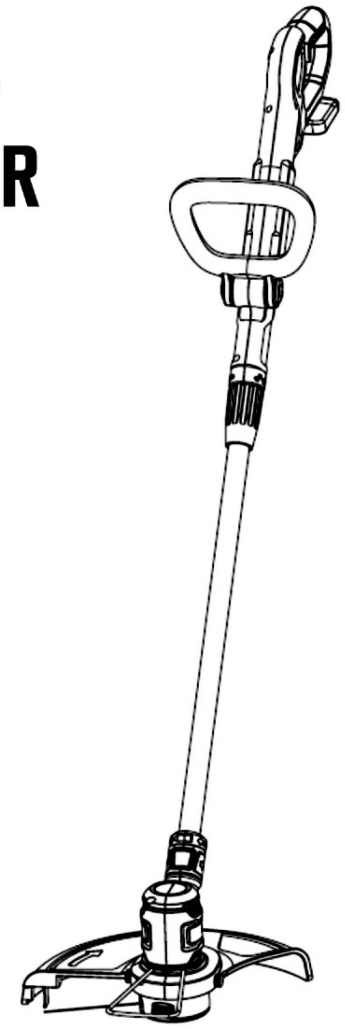

Everything PRORUN

Before charging, read the instructions.

⚠ **IMPORTANT - READ CAREFULLY BEFORE USE**

⚠ **IMPORTANT SAFETY INSTRUCTIONS – SAVE THESE INSTRUCTIONS**

WARNING: To reduce the risk of injury, the user must read and understand the Operator's Manual before using this product. Save these instructions for future reference.

Please let us know what you think.
To leave a review and see our full line of products, visit:

proruntech.com ★★★★★

1-844-905-0882, info@proruntech.com

Version: B - Issue Date: 2023/03/31

Table of Contents

1. GENERAL MACHINE SAFETY WARNINGS Page 1
2. SAFETY INSTRUCTIONS FOR STRING TRIMMER Page 4
3. TRANSPORTING AND STORAGE Page 5
4. BATTERY CHARGER AND BATTERY Page 6
5. SYMBOLS Page 9
6. SPECIFICATIONS Page 11
7. KNOW YOUR STRING TRIMMER Page 12
8. BATTERY AND CHARGER OPERATION Page 14
9. ASSEMBLY INSTRUCTIONS Page 16
10. OPERATIONS Page 19
11. ENVIRONMENTAL PROTECTION Page 22
12. MAINTENANCE Page 23
13. TROUBLESHOOTING Page 25
14. EC DECLARATION Page 26

1. GENERAL MACHINE SAFETY WARNINGS

⚠ WARNING Read all safety warnings, instructions, illustrations, and specifications provided with this machine. *Failure to follow the warnings and instructions may result in electric shock, fire, and/or serious injuries.*

Save all warnings and instructions for future reference.

The term "machine" in all of the warnings listed below refers to your battery operated (cordless) machine.

● Work area safety

a) Keep work area clean and well lit. *Cluttered or dark areas invite accidents.*

b) Do not operate machines in explosive atmospheres, such as in the presence of flammable liquids, gases, or dust. *Machines create sparks which may ignite the dust or fumes.*

c) Keep children and bystanders away while operating a machine. *Distractions can cause you to lose control.*

● Electrical safety

a) Avoid body contact with earthed or grounded surfaces such as pipes, radiators, ranges, and refrigerators. *There is an increased risk of electric shock if your body is earthed or grounded.*

b) Do not expose machines to rain or wet conditions. *Water entering a machine will increase the risk of electric shock.*

c) Do not abuse the battery charger cord. Never use the cord for carrying.

Keep cord away from heat, oil, sharp edges, or moving parts. Damaged or entangled cords increase the risk of electric shock.

● Personal safety

a) Stay alert, watch what you are doing, and use common sense when operating a machine. Do not use a machine while you are tired or under the influence of drugs, alcohol, or medication. *A moment of inattention while operating machines may result in serious personal injury.*

b) Use personal protective equipment. Always wear eye protection. *Protective equipment such as dust mask, non-skid safety shoes, hard hat, or hearing protection used for appropriate conditions will reduce personal injuries.*

c) Prevent unintentional starting. Ensure the switch is in the off position before connecting battery pack and/or to power source, picking up or carrying the machine. *Carrying machines with your finger on the switch or energizing machines that have the switch on invites accidents.*

d) Remove any adjusting key or wrench before turning the

machine on. *A wrench or a key left attached to a moving part of machine may result in personal injury.*

e) Do not overreach. Keep proper footing and balance at all times. *This enables better control of the machine in unexpected situations.*

f) Dress properly. Do not wear loose clothing, or jewelry. Keep your hair, clothing, and gloves away from moving parts. *Loose clothes, jewelry, or long hair can be caught in moving parts.*

g) If devices are provided for the connection of dust extraction and collection facilities, ensure these are connected and properly used. *Use of these devices can reduce dust-related hazards.*

h) Do not let familiarity gained from frequent use of tools allow you to become complacent and ignore tool safety principles. *A careless action can cause severe injury within a fraction of a second.*

● Machine use and care

a) Do not force the machine. Use the correct machine for your application. *The correct machine will do the job better and safer at the rate for which it was designed.*

b) Do not use the machine if the switch does not turn it on and off. *Any machine that cannot be controlled with the switch is dangerous and must be repaired.*

c) Remove the battery pack from the machine before making any adjustments, changing accessories, or storing machines. *Such preventive safety measures reduce the risk of starting the power tool accidentally.*

d) Store idle machines out of the reach of children and do not allow persons unfamiliar with the machine or these instructions to operate the machine. *Machines are dangerous in the hands of untrained users.*

e) Maintain machines and accessories. Check for misalignment or binding of moving parts, breakage of parts, and any other condition that may affect the machine's operation. If damaged, have the machine repaired before use. *Many accidents are caused by poorly maintained machines.*

f) Keep cutting tools sharp and clean. *Properly maintained cutting tools with sharp cutting edges are less likely to bind and are easier to control. Use only trimmer line as outlined in operator's manual.*

g) Use the machine, accessories, and tool bits etc. in accordance with these instructions, taking into account the working conditions and the work to be performed. Use of the machine for operations different from those intended could result in a

hazardous situation.

h) Keep handles and grasping surfaces dry, clean, and free from oil and grease. *Slippery handles and grasping surfaces do not allow for safe handling and control of the tool in unexpected situations.*

● Battery tool use and care

a) Recharge only with the charger specified by the manufacturer. *A charger that is suitable for one type of battery pack may create a risk of fire when used with another battery pack.*

b) Use machines only with specifically designated battery packs. *Use of any other battery packs may create a risk of injury and fire.*

c) When battery pack is not in use, keep it away from other metal objects, like paper clips, coins, keys, nails, screws, or other small metal objects, that can make a connection from one terminal to another. *Shorting the battery terminals together may cause burns or a fire.*

d) Under abusive conditions, liquid may be ejected from the battery; avoid contact. If contact accidentally occurs, flush with water. If liquid contacts eyes, additionally seek medical help. *Liquid ejected from the battery may cause irritation or burns.*

e) Do not use a battery pack or tool that is damaged or modified. *Damaged or modified batteries may exhibit unpredictable behavior resulting in fire, explosion, or risk of injury.*

f) Do not expose a battery pack or tool to fire or excessive temperature. *Exposure to fire or temperature above 212°F (100°C) may cause explosion.*

g) Follow all charging instructions and do not charge the battery pack or tool outside the temperature range specified in the instructions. *Charging improperly or at temperatures outside the specified range may damage the battery and increase the risk of fire.*

● Service

a) Contact PRORUN Customer Service with questions or issues with this machine. *This will ensure that the safety of the power tool is maintained.*

b) Never service damaged battery packs. *Service of battery packs should only be performed by the manufacturer or authorized service providers.*

⚠WARNING: Read all instructions before using this appliance.

⚠WARNING: When using electric gardening appliances, basic safety precautions should always be followed to reduce the

risk of fire, electric shock, and personal injury, including the following:

• Training

a) Read the instructions carefully. *Be familiar with the controls and the correct use of the machine.*

b) Keep in mind, that the operator or user is responsible for accidents or hazards occurring to other people or their property.

• Preparation

a) This machine is designed for maintaining lawns and gardens in the manner and in the conditions described in this manual. *Use of the machine for operations different than intended could result in serious injury or death.*

– Do not use it for any other purposes. Misuse may result in personal injury or property damage, including damage to the machine.

– Use the machine, battery, and charger only as described in this manual.

2. SAFETY INSTRUCTIONS FOR STRING TRIMMER

● General string trimmer safety warnings:

a) Do not use the machine in bad weather conditions, *especially when there is a risk of lightning.* *This decreases the risk of being struck by lightning.*

b) Thoroughly inspect the area for wildlife where the machine is to be used. *Wildlife may be injured by the machine during operation.*

c) Thoroughly inspect the area where the machine is to be used and remove all stones, sticks, wires, bones, and other foreign objects. *Thrown objects can cause personal injury.*

d) Before using the machine, always visually inspect to see that the trimmer head (bump head) and cutting guard are not damaged and the trimmer head has trimmer line properly installed. Damaged parts increase the risk of injury.

e) Follow instructions for changing accessories. *Improperly tightened trimmer head, cutting guard, or front handle securing nuts and bolts may either damage the string trimmer or result in it becoming detached.*

f) Wear eye, ear, head, and hand protection. *Adequate protective equipment will reduce personal injury by flying debris or accidental contact with the cutting line or blade.*
g) While operating the machine, always wear non-slip and protective footwear. Do not operate the machine when barefoot or wearing open sandals. *This reduces the chance of injury to the feet from contact with the moving cutters or lines.*
h) While operating the machine, always wear long trousers. *Exposed skin increases the likelihood of injury from thrown objects.*
i) Keep bystanders away while operating the machine. *Thrown debris can result in serious personal injury.*
j) Always use two hands when operating the machine. *Holding the machine with both hands will avoid loss of control.*
k) Hold the machine by the insulated gripping surfaces only because the trimming line may contact hidden wiring. *Cutting line contacting a "live" wire may make exposed metal parts of the machine "live" and could give the operator an electric shock.*
l) Always keep proper footing and operate the machine only when standing on the ground. *Slippery or unstable surfaces may cause a loss of balance or control of the machine.*
m) Do not operate the machine on excessively steep slopes. *This reduces the risk of loss of control, slipping and falling which may result in personal injury.*
n) When working on slopes, always be sure of your footing, always work across the face of slopes, never up or down and exercise extreme caution when changing direction. *This reduces the risk of loss of control, slipping and falling which may result in personal injury.*
o) Keep all parts of the body away from the trimmer head and trimmer line while the machine is operating. Before you start the machine, make sure the trimmer head and trimmer line are not contacting anything. *A moment of inattention while operating the string trimmer may cause entanglement or personal injury from flying debris.*
p) Do not operate the machine above waist height. *This helps prevent unintended trimmer head and trimmer line contact and enables better control of the machine in unexpected situations.*

q) When cutting brush or saplings that are under tension, be alert for spring back. *When the tension in the wood fibers is released, the brush or sapling may strike the operator and/or throw the machine out of control.*

r) Use extreme caution when cutting brush and saplings. *The slender material may catch the trimmer head and trimmer line and be whipped toward you or pull you off balance.*

s) Maintain control of the machine and do not touch trimmer head and trimmer line and other hazardous moving parts while they are still in motion. *This reduces the risk of injury from moving parts.*

t) When clearing jammed material or servicing the machine, make sure the switch is off and the battery pack is removed. *Unexpected starting of the machine while clearing jammed material or servicing may result in serious personal injury.*

u) Carry the machine with the machine switched off and away from your body. *Proper handling of the machine will reduce the likelihood of accidental contact with a moving trimmer head and trimmer line.*

v) Only use replacement cutters, lines, cutting heads and blades. *Incorrect replacement parts may increase the risk of breakage and injury.*

w) Inspect machine for damage upon striking a hard object or if there appears to be excessive vibration.

x) Keep hands away from any sharp device intended to limit the length of the filament line.

3. TRANSPORTING AND STORAGE

a) Unintentional starting may result in personal injury or property damage. *Remove the battery before inspecting the string trimmer or carrying out any cleaning, maintenance, repair work, before storing, and any other time the string trimmer is not in use.*

b) Improper storage can result in unauthorized use, damage to the machine, battery, and charger or an increased risk of fire, electric shock, and other personal injuries or property damage.

– Before storing, always unplug the charger from the wall outlet and remove the battery.

– Store the machine, battery, and charger indoors in a dry, secure place out of the reach of children and other unauthorized users.

4. BATTERY AND BATTERY CHARGER

This section describes the battery and battery charger safety for your battery product.
Only use original batteries for products and only charge them in an original battery charger.

● Battery charger

The battery chargers are only used for charging of PRORUN® 20V replacement batteries.

– This manual contains important safety and operating instructions for battery charger.
– Before using battery charger, read all instructions and cautionary markings on battery charger, and product using battery.

⚠ CAUTION! Charge only Li-ion batteries recommended by the manufacturer.

– Other types of batteries may burst causing personal injury and damage.
– If the shape of the plug does not fit the power outlet, use an attachment plug adapter of the proper configuration for the power outlet.

⚠ WARNING! Minimize the risk of electric shock or short circuit as follows:

– Never insert any object into the charger's cooling slots. Do not try to dismantle the battery charger.
– Never connect the charger terminals to metal objects as this can short circuit the battery charger.
– Use approved and intact wall sockets.

⚠ WARNING! This machine produces an electromagnetic field during operation. This field may under some circumstances interfere with active or passive medical implants. To reduce the risk of serious or fatal injury, we recommend persons with medical implants consult their physician and the medical implant manufacturer before operating this machine. Do not use product when a thunderstorm is approaching.

– Unplug the charger from the wall outlet before inspecting or cleaning the charger.

– Regularly check that the battery charger connection wire is intact and that there are no cracks in it. Replace the charger if the power supply cord becomes worn or damaged. The power supply cord cannot be repaired or replaced.

– Never carry the battery charger using the cord and never pull out the plug by pulling the cord.

– Keep all cords and extension cords away from water, oil, and sharp edges. Make sure the cord is not pinched in doors, fences, or the like. Otherwise, it can cause the object to become live.

– Never clean the battery or the battery charger with water.

– Never allow the children to use the battery charger. When charging, the charger must be placed in a well- ventilated area and under a roof to keep out moisture.

⚠ WARNING! Do not charge non-rechargeable batteries in the battery charger or use them in the ma- chine.

⚠ WARNING! Do not use the battery charger close to corrosive or flammable materials. Do not cover the battery charger. Pull out the plug to the battery charger in the event of smoke or fire.

– Use the battery charger only when the surrounding temperature is between 41 °F (5 °C) and 113 °F (45 °C). Use the charger in an environment which is well ventilated, dry, and free from dust.

Do not use:

– A faulty or damaged battery charger

– The battery in the battery charger outdoors.

Do not charge:

– Or never use a faulty, damaged, or deformed battery.

– The battery in the rain or in wet conditions.

– The battery in direct sunlight.

● Battery

– Do not dismantle, open or shred secondary batteries.
– Keep batteries out of the reach of children.
– Do not expose batteries to heat or fire. Avoid storage in direct sunlight.
– Do not short-circuit a battery. Do not store batteries haphazardly in a box or drawer where they may short-circuit each other or be short-circuited by other metal objects.
– Do not remove a battery from its original packaging until required for use.
– Do not subject batteries to mechanical shock.
– In the event of a cell leaking, do not allow the liquid to come in contact with the skin or eyes. If contact has been made, wash the affected area with copious amounts of water and seek medical advice.
– Do not use any charger other than that specifically provided for use with the equipment.
– Do not use any battery which is not designed for use with the equipment.
– Always purchase the battery recommended by the device manufacturer for the equipment.
– Keep batteries clean and dry.
– Wipe the battery terminals with a clean dry cloth if they become dirty.
– Secondary batteries need to be charged before each use. Always use the correct charger and refer to the manufacturer's instructions or equipment manual for proper charging instructions.
– Do not leave a battery on prolonged charge when not in use.
– After extended periods of storage, it may be necessary to charge and discharge the batteries several times to obtain maximum performance.
– Retain the original product literature for future reference.
– Use the battery only in the application for which it was intended. When possible, remove the battery from the equipment when not in use.
– Dispose of properly.

5. SYMBOLS

This page depicts and describes safety symbols that may appear on this product. Read, understand, and follow all instructions on the machine before attempting to assemble and operate it.

	Safety Alert	Because a string trimmer is a high-speed cutting tool, special safety precautions must be observed to reduce the risk of personal injury.
	Read the Operator's Manual	It is important that you read, fully understand, and observe the following safety precautions and warnings. Read the operator's manual and the safety precautions periodically.
	Do not expose to rain	Protect the tool, battery, and charger from rain, water, liquids, and damp conditions. Keep the tool, battery, and charger dry.
	Beware of thrown objects	Watch out for thrown objects and ricochets to reduce the risk of serious or fatal injury to the operator or bystanders.
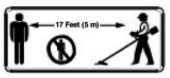	Keep bystanders away	The distance between the machine and bystanders shall be at least 17 ft. (5 m).
	Do not use metals	Do not use metal blades, use recommended flexible cutting lines only.
	Wear eye and ear protection	To reduce the risk of injury to you, always wear safety goggles or safety glasses, sound barriers when operating this product.
	Wear protective gloves	Always wear heavy duty nonslip gloves when handling the machine.
	Wear safety footwear	Wear sturdy boots with nonslip soles. Never wear sandals, flip-flops or go barefoot.
	Remove the battery	Disconnect or remove the battery from the string trimmer before cleaning or maintenance.
 MAX 8100 rpm	Rotation speed and direction	Maximum speed and rotation direction of output shaft.
	Never expose to fire	Risk of fire, explosion and/or burns, including chemical burns. Never incinerate or place the battery on or near fires, stoves, or other high-temperature locations.
	Never heat the battery	Do not disassemble, crush, heat above 212°F (100°C). Never expose the battery to high pressures.

	Never immerse in water	To reduce the risk of personal injury or property damage from a short circuit, fire, or explosion. Never immerse the battery in water or other liquids.
	Recycling	Take the string trimmer, charger, accessories, and packaging to an approved disposal site for environmentally friendly recycling.
	Waste	Symbols on the product or its packaging indicate that this product cannot be handled as domestic waste. This product must be deposited at an appropriate recycling facility.
	Indoor use only	Use and store charger only indoors in dry rooms.
	Fail-safe transformer	For safer electronic isolation.
	Double insulated	To reduce electric shock protection.
	Direct Current	Type of current

This below units may be used in manual:

V	Volts	Voltage
A	Amperes	Current
Hz	Hertz	Frequency(cycles per second)
W	Watts	Power
min	Minutes	Time
mm	Millimeter	Length or size
in.	Inch	Length or size
Kg	Kilogram	Weight
Lbs.	Pound	Weight
RPM	Revolutions per minute	Rotational speed

DANGER! People with electronic devices, such as pacemakers, should consult their physician(s) before using this product. Operation of electrical equipment in close proximity to a heart pacemaker could cause interference or failure of the pacemaker.

6. SPECIFICATIONS

Motor

Motor type	PMDC
Speed of output shaft, rpm	8100
Cutting width	12 inches (300 mm)

Weight

Weight without battery	3.74 Lbs. (1.7 Kg)

Sound levels

Sound pressure level,measured according toEN60335-1 and EN50636-2-91,dB(A)	76.1，K=3
Sound power level,measured according to ISO22868,dB(A)	92.8，K=3
Guaranteed Sound power level,dB(A)	94

Vibration levels

Vibration levels at handles, measured according to ISO 22867, m/s^2， front/rear handles:	1.28/1.02，K=1.5

Approved batteries for PST120	
Battery	**PB12040**
Type	Lithium-ion
Battery capacity, Ah	5.0
Voltage, V	20
Weight, kg	0.7

Approved chargers for the specified batteries, PB12040	
Battery charger	**PC120**
Input Voltage, V	100-240
Frequency, Hz	50-60
Power, W	90W

7. KNOW YOUR STRING TRIMMER

Components and Controls

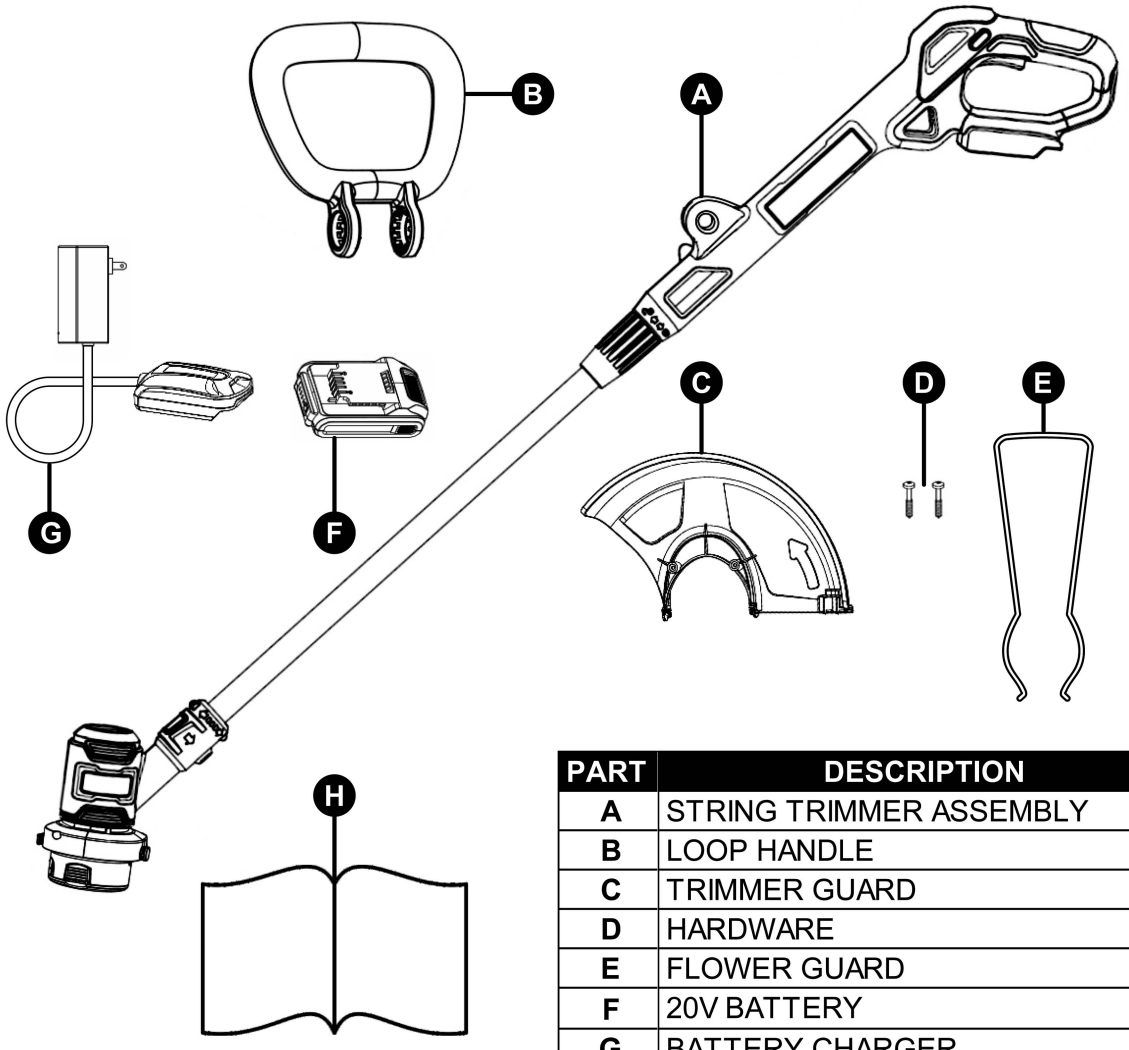

PART	DESCRIPTION
A	STRING TRIMMER ASSEMBLY
B	LOOP HANDLE
C	TRIMMER GUARD
D	HARDWARE
E	FLOWER GUARD
F	20V BATTERY
G	BATTERY CHARGER
H	OPERATOR'S MANUAL

7. KNOW YOUR STRING TRIMMER

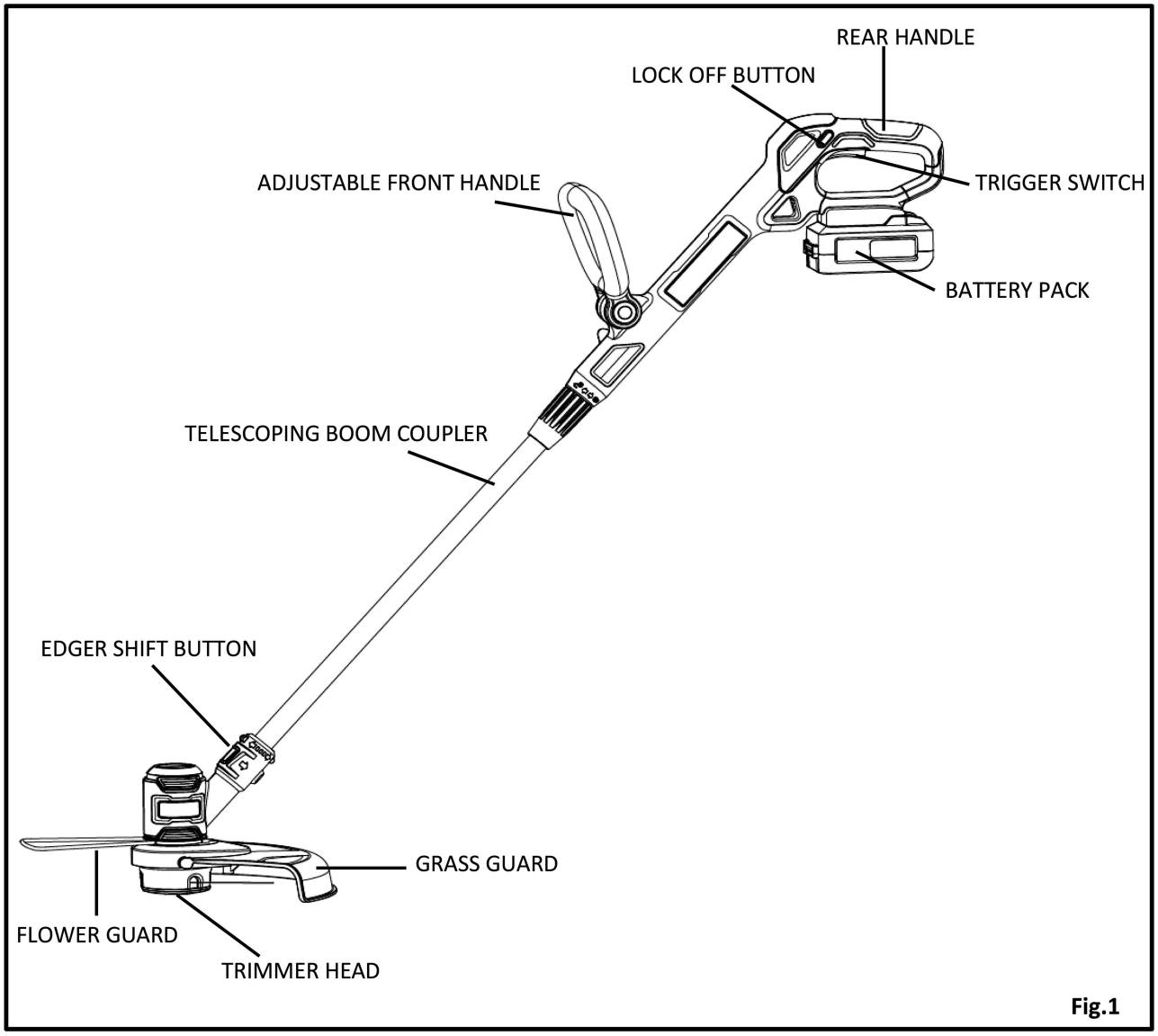

Fig.1

KNOW YOUR GRASS TIMMER (See Fig. 1)

The safe use of this product requires an understanding of the information on the tool and in this operator's manual as well as a knowledge of the project you are attempting. Before use of this product, familiarize yourself with all operating features and safety rules.

FLOWER GUARD

The easily mounted flower guard protects flowers from being cut.

FRONT HANDLE

The grass trimmer is equipped with a front handle assembly for ease of operation and to prevent loss of control.

TRIMMER / EDGER SHIFT B UTTON

Press this button and rotate the head 90°to adjust the tool between trimmer and edger.

TELESCOPING BOOM

The grass trimmer can be adjusted to different extension points for ease of use.

TRIGGER SWITCH

The switch trigger, located beneath the rear handle, and the lock-off button, located behind the auxiliary handle, must be depressed simultaneously to allow blade rotation.

8. BATTERY AND CHARGER OPERATION

This section describes the battery and battery charger safety for your battery product.

Only use PRORUN® original batteries for PRORUN products and only charge them in an original battery charger from PRORUN. The batteries are software encrypted.

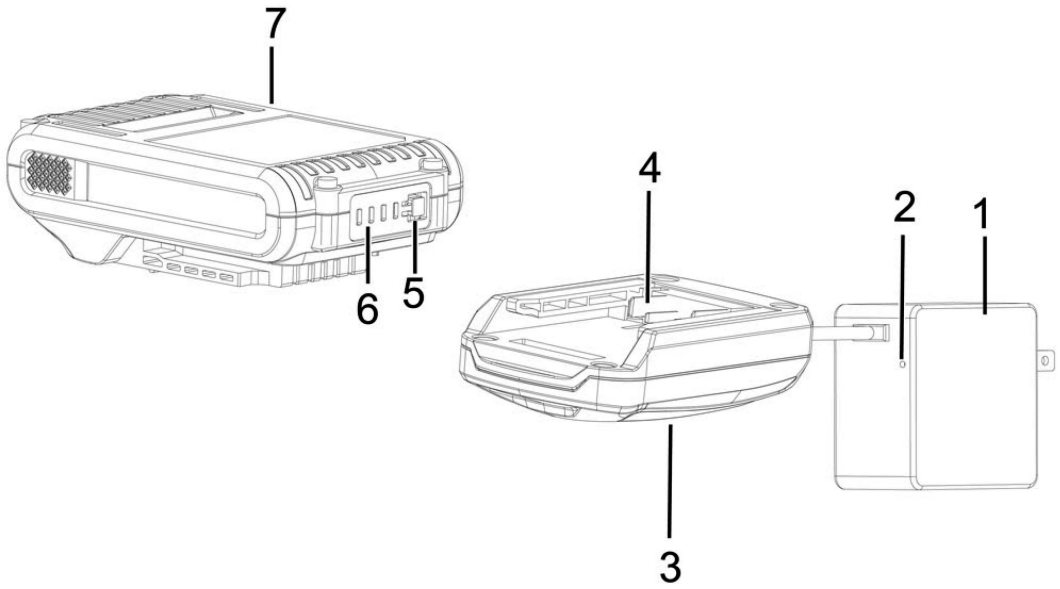

1. Electric plug
2. Charging indication LED
3. Battery charger
4. Electrical terminal
5. Electric energy button
6. Electric energy LED light
7. Battery

NOTE! The specifications of the plugs can be different by country, the picture is only for reference. If the shape of the plug does not fit the power outlet, use an attachment plug adapter of the proper configuration for the power outlet.

⚠ **WARNING! Risk of electric shock and short circuiting.** Use approved and intact wall sockets. Make sure that the power cord is not damaged. Replace power cord if it appears to be damaged in any way.

● Connect the battery charger

Connect the battery charger (3) to the voltage and frequency specified on the rating plate.

– Put the electric plug (1) in an earthed or grounded socket-outlet.

– The charging indication LED (2) will shine green indicating that the charger is working correctly.

– After 5 second, the light will turn off if no battery in the charger.

● Connect the battery to the battery charger

The battery(7) must be charged before using it the first time. The battery is only 30% charged when delivered.

NOTE! Monitor the charging process while charging a battery. It is recommended to remove the battery from the battery charger when the battery is full charged, or the charger is disconnected from the power supply.

– Align the raised ribs of the battery pack with the mounting slots in the charger; slide the battery battery into the charger and engage the battery with the charger's electrical terminals.

– The charger will communicate with the battery pack to evaluate the condition of the battery pack.

– While the battery pack is charging, the charger's indication LED will shine as follows to indicate the charging process and levels:



The charger's indication LED light shines consistently red when the battery is charging.



The charger's indication LED light shines consistently green when the battery is fully charged.



The battery will not be charged if the battery temperature is deviation. In that case the charger's indication LED light shines consistently green until the battery cool down or heat to normal temperature.



The battery will never be charged if the battery is damaged. In that case the charger's indication LED light shines consistently green

– The four LEDs on the battery pack indicate the current charged power level. Press the battery's electric energy button to check the power level of the battery.

– When the battery is full charged, the battery charger will stop charging (switch to stand by).

– It is recommended to remove the battery from the battery charger when the battery is fully charged, or the charger is disconnected from the power supply.

– Pull out the plug. Never use the power supply cable to disconnect the charger from the wall socket.

● Maintenance

– Make sure the battery and battery charger are clean and that the terminals on the battery and the battery charger are always clean and dry before the battery is placed in the battery charger.

– Keep the battery guide tracks clean. Clean plastic parts with a clean and dry cloth.

● Transport and storage

– Store the equipment in a lockable area so that it is out of reach of children and unauthorized persons.

– Store the battery and the battery charger in a dry, moisture-free and frost-free space.

– Store the battery where the temperature is between 14 °F (-10 °C) and 113 °F (45 °C) and never in direct sunlight.

– Store the battery charger only in an enclosed and dry space.

– Be sure to store the battery separate from the battery charger.

● Fault codes

LED display	Possible faults	Possible action
Charger LED shines consistently green but battery electric energy LED light indicates no increase in charge.	The battery is ok, but temperature deviation.	Charge the battery in surroundings where temperatures are between 32°F (0 °C) and 104°F (40 °C). Wait for the battery cool down.
Charger LED shines consistently green but battery electric energy LED light indicates no increase in charge.	Battery is damaged. Charger is damaged.	Contact PRORUN Customer Service.

9. ASSEMBLY INSTRUCTIONS

BATTERY

IMPORTANT! The battery pack is not charged when it is purchased. Before using the string trimmer for the first time, place the battery pack in the battery charger and charge. Make sure to read all safety precautions, and follow the instructions in the Battery Charger section.

To remove the battery (See Fig. 2) :

1. Slide the latch button on the battery pack down (1) and hold.
2. Grasp the trigger handle (2) firmly. Pull the battery pack out of the handle.

NOTE: The battery pack fits snugly into the handle to prevent accidental dislodging. It may require a strong pull to remove.

To install the battery (See Fig.2):

1. Align the tongue (3) of the battery pack with the cavity in the handle housing.
2. Grasp the trigger handle (2) firmly.
3. Push the battery pack into the handle until the latch locks into place.

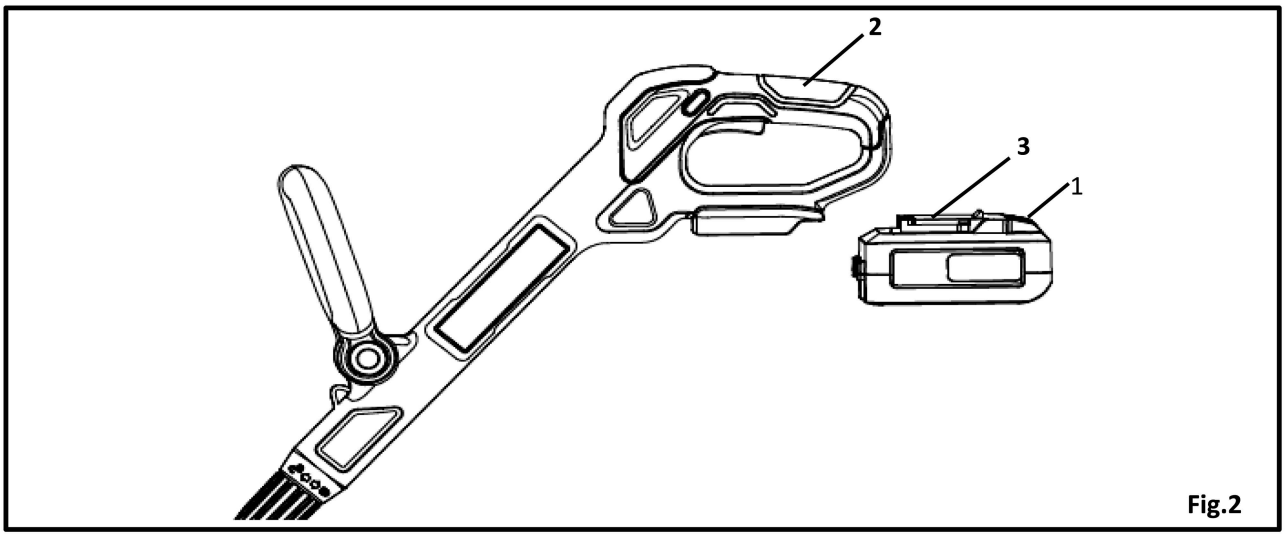

Fig.2

WARNING

Follow these instructions in order to avoid injury and to reduce the risk of electric shock or fire:

- Replace the battery pack or the charger immediately if the battery case or charger cord is damaged.
- Verify that the switch is in the OFF position before inserting or removing the battery pack.
- Verify that the battery pack is removed and the switch is in the OFF position before inspecting, adjusting, or performing maintenance on any part of the trimmer.
- Read, understand, and follow the instructions contained in the section entitled Charging Procedure.

UNPACKING

- This product requires assembly.
- Carefully remove the product and any accessories from the box. Make sure that all items listed in the packing list are included.
- Inspect the product carefully to make sure no breakage or damage occurred during shipping.
- Do not discard the packing material until you have carefully inspected and satisfactorily operated the product.

WARNING

If any parts are damaged or missing, do not operate this product until the parts are replaced.

Failure to heed this warning could result in serious personal injury.

WARNING

Never use the tool without properly fitted guard

9. ASSEMBLY INSTRUCTIONS

ATTACHING GRASS GUARD

1. Inset the pin into the hole of the motor housing.(see Fig. 3)
2. Rotation the guard to the suitable position, then install two screws.(see Fig.4)

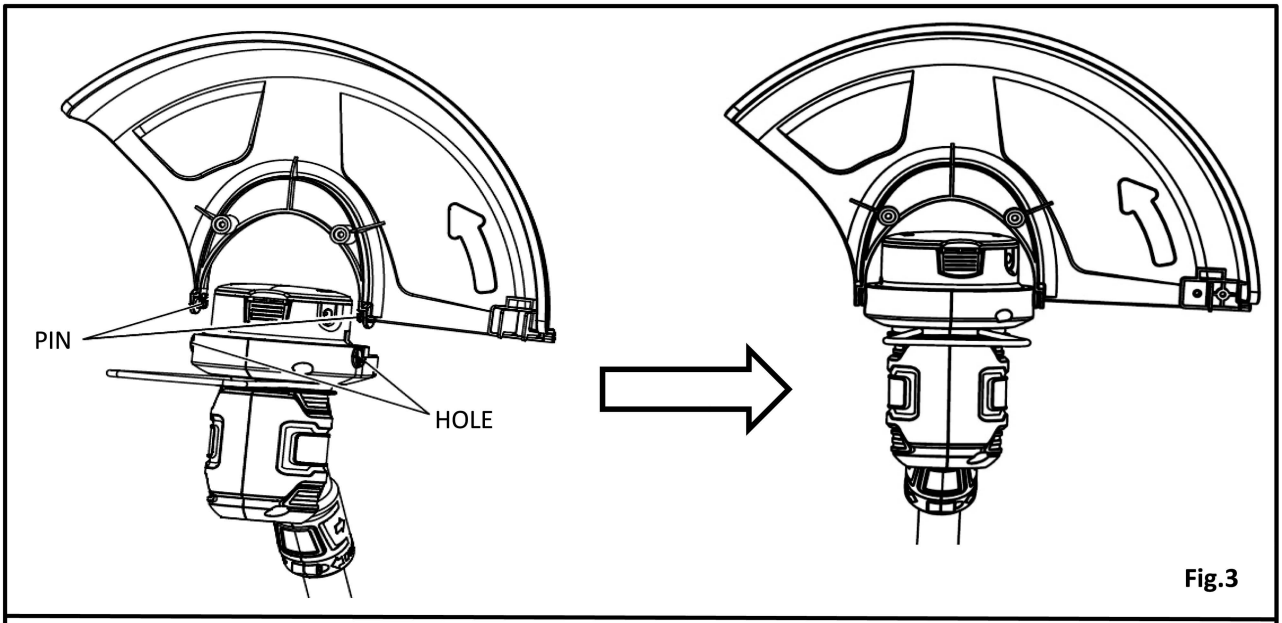

Fig.3

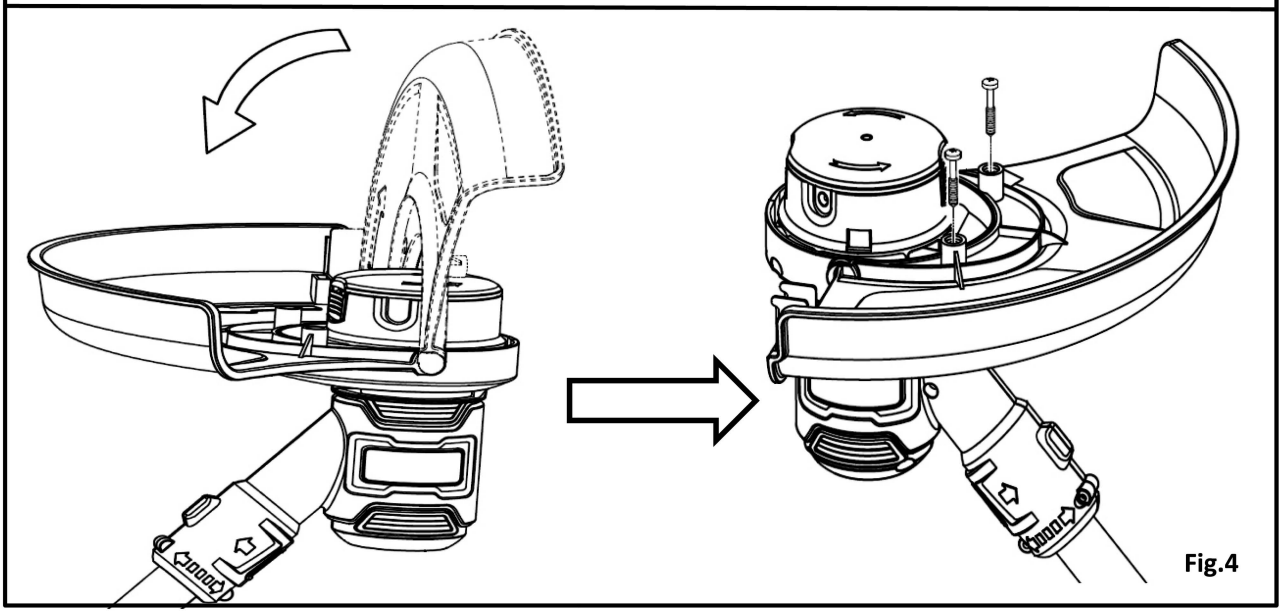

Fig.4

9. ASSEMBLY INSTRUCTIONS

ATTACHING FRONT HANDLE

1.Press the two buttons with your fingers and hold(See Fig.5)

2. Install the front handle onto the button base.(See Fig.6)

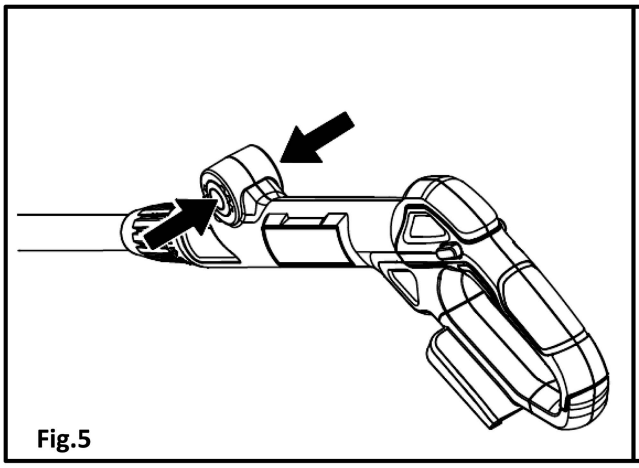

Fig.5

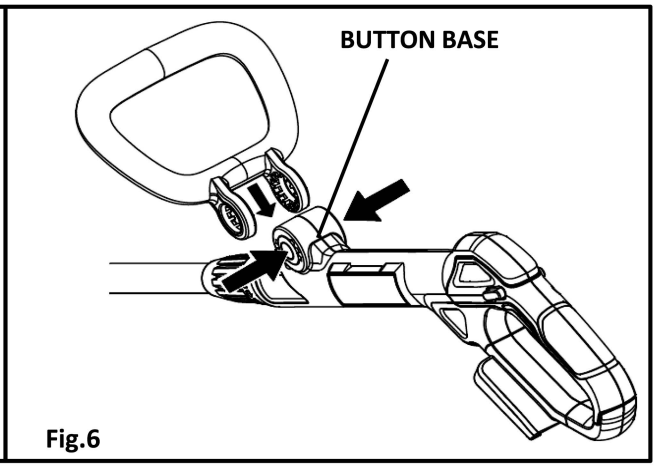

Fig.6

STARTING/STOPPING THE TRIMMER (See Fig.7**)**

The Grass trimmer has one switches controls and a lock-OFF button used together to prevent accidental start-ups or injury.

1. Place one hand on the trigger handle (1). Place the other hand on the adjustable front handle .
2. Press the lock-OFF button (2) and hold.
3. Squeeze the trigger switch (3). The grass trimmer will turn ON.
4. Release the lock-OFF button. The grass trimmer will stay on as long as the trigger handle the trigger switch are squeezed ON.
5. The string trimmer will stop if you release the trigger handle.

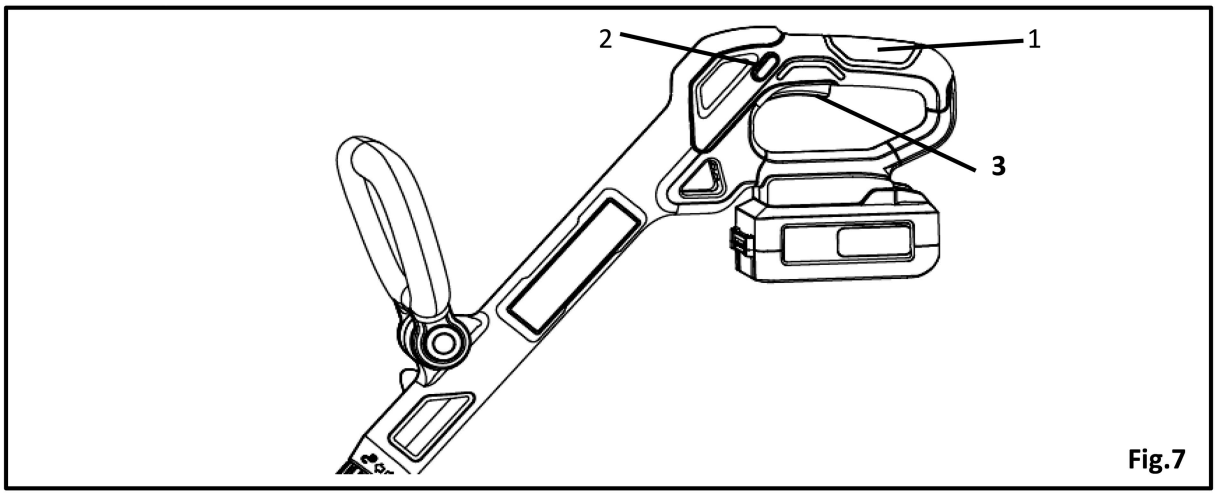

Fig.7

FOLLOW THESE TIPS WHEN USING THE GRASS TRIMMER:

•Hold the trimmer with your right hand on the rear handle and your left hand on the front handle.

•Keep a firm grip with both hands while in operation

• Trimmer should be held at a comfortable position with the rear handle about hip height.

• Cut tall grass from the top down. This will prevent grass from wrapping around the shaft housing and grass head

IF GRASS BECOMES WRAPPED AROUND THE GRASS HEAD:

• Stop the trimmer.

• Remove the battery.

• Remove the grass.

10. OPERATIONS

WARNING

Always hold the string trimmer away from the body keeping clearance between the body and the string trimmer. Any contact with the string trimmer cutting head while operating can result in serious personal injury.

•Keep supply and extension cords away from **cutting means**.

•Avoid using the machine in bad weather conditions especially when there is a risk of lightning.

•Use the machine only in daylight or good artificial light.

•Never operate the machine with damaged guards or shields or without guards or shields in place.

•Switch on the motor only when the hands and feet are away from the **cutting means**.

•Take care against injury to feet and hands from the **cutting means**.

•Always ensure that the ventilation openings are kept clear of debris.

• Always remove the battery cartridge from the equipment:

− whenever leaving the equipment unattended.

− before clearing a blockage.

− before checking, cleaning or working on the equipment.

− after striking a foreign object to inspect the machine for damage.

− whenever the equipment starts vibrating abnormally, for immediately check.

• Use only the manufacturer's recommended replacement parts and accessories.

• Inspect and maintain the equipment regularly, especially before/after use. Have the equipment repaired only by our authorized service center.

• Keep handles dry, clean and free from oil and grease.

ADVANCING THE CUTTING LINE

NOTE: The trimmer is equipped with an auto-feed head. Bumping the head to try to advance the line will damage trimmer and void warranty.

• With the trimmer running, release the switch trigger.

• Wait two seconds, and press the switch trigger.

NOTE: The cutting line will extend approximately 1/4 in. with each stop and start of the switch trigger until the cutting line reaches the length of the cutting line deflector blade.

• Resume trimming.

ADVANCING THE CUTTING LINE MANUALLY

Remove the battery, then push the spool retainer button in while pulling on cutting line to manually advance the cutting line.

CUT OFF BLADE

This trimmer is equipped with a cut-off blade on the trimmer guard. For best cutting, advance the cutting line until the cut-off blade on the trimmer guard can trim the line to length. Advance the cutting line whenever you hear the engine running faster than normal, or when trimming efficiency diminishes. This will maintain best performance and keep the cutting line long enough to advance properly.

CUTTING TIPS (See Fig.8 **)**

• Keep the trimmer tilted toward the area being cut; this is the best cutting area.

• The string trimmer cuts when passing the unit from left to right. This will avoid throwing debris at the operator Avoid cutting in the dangerous area shown in figure 8.

Use the tip of the cutting line to do the cutting; do not force the trimmer head into uncut grass.

• Wire and picket fences cause extra cutting line, even breakage. Stone and brick walls, curbs, and wood may wear the cutting line rapidly.

• Avoid trees and shrubs. Tree bark, wood moldings, siding, and fence posts can easily be damaged by the cutting line.

10. OPERATIONS

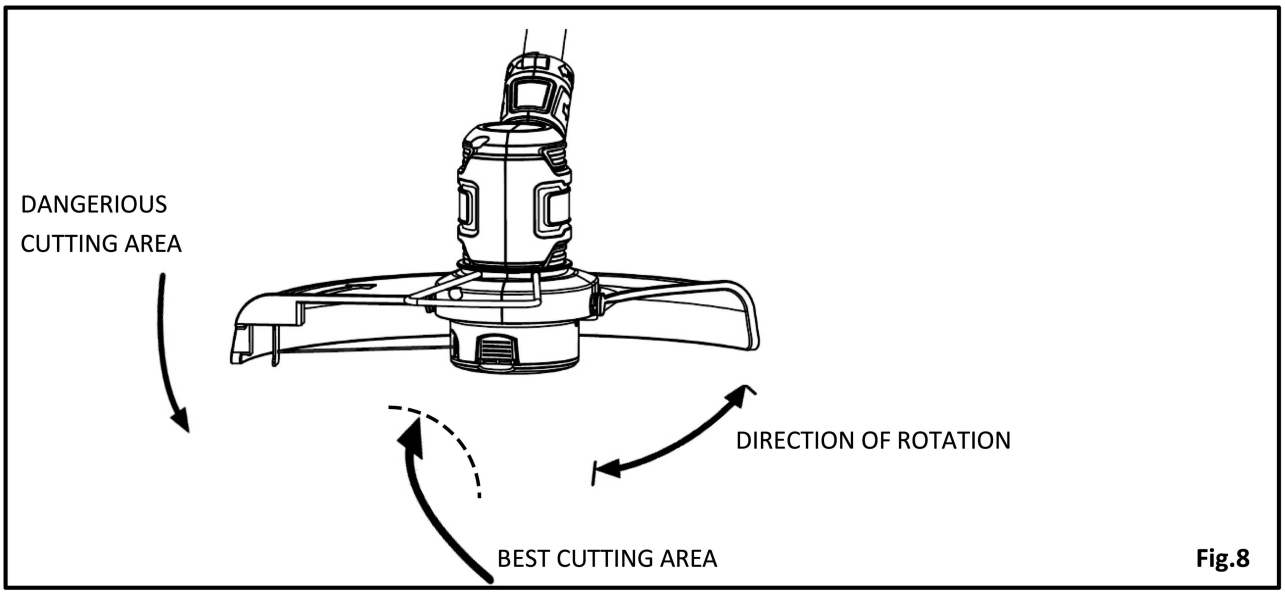

Fig.8

ADJUST THE FRONT HANDLE See Fig.9

•The angle of the front handle can be adjusted upwards in 2 stage from 30° (straight) to 90°, and downwards in 3 stage from 90°to 150°. There are therefore 5 possible working positions.

ADJUST THE LENGTH OF THE SHAFT See Fig.10

•Loosen the coupler clockwise rotate and telescope or stretch the proper length, then tighten the coupler anticlockwise rotate .

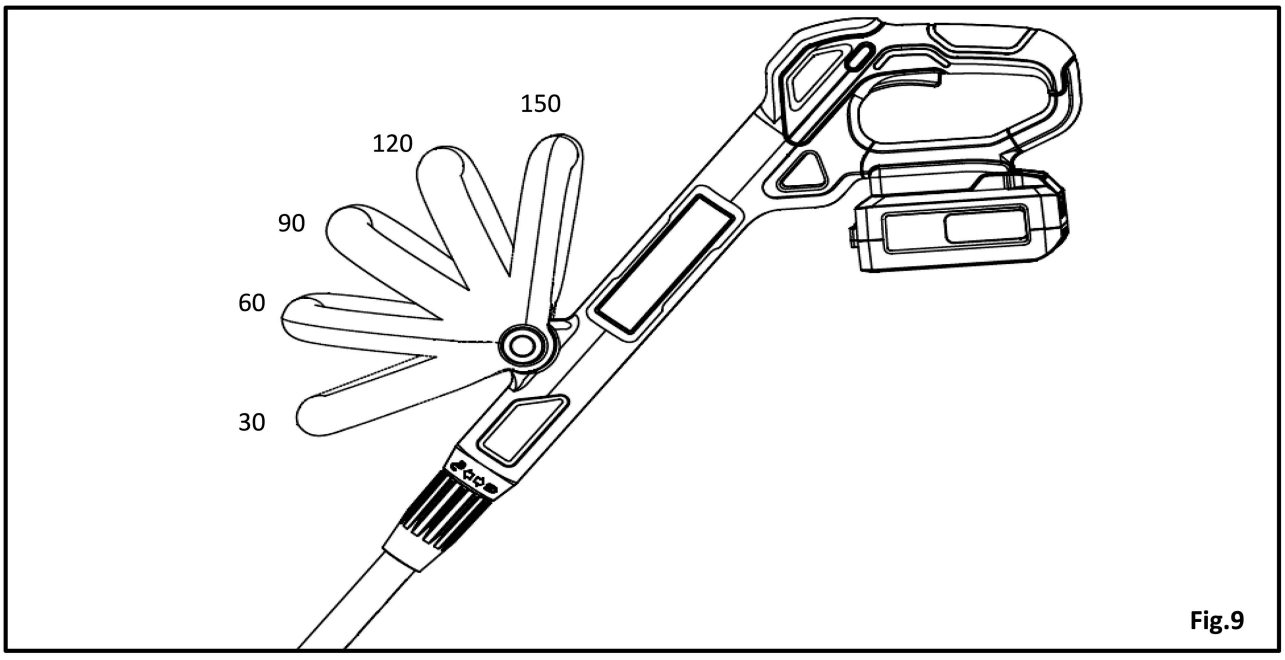

Fig.9

10. OPERATIONS

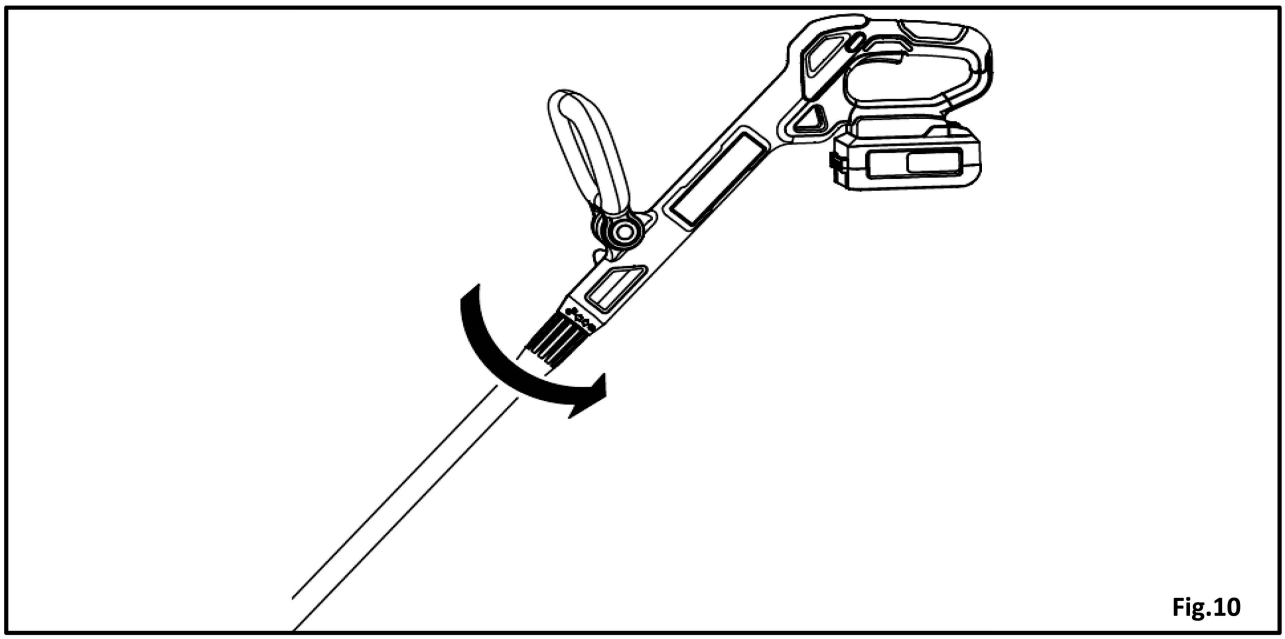

Fig.10

EDGING (See Fig. 11**)**

Remove the battery. Hold the front handle and press the shift button and clockwise rotate the trimmer head 180° then fix the trimmer head.

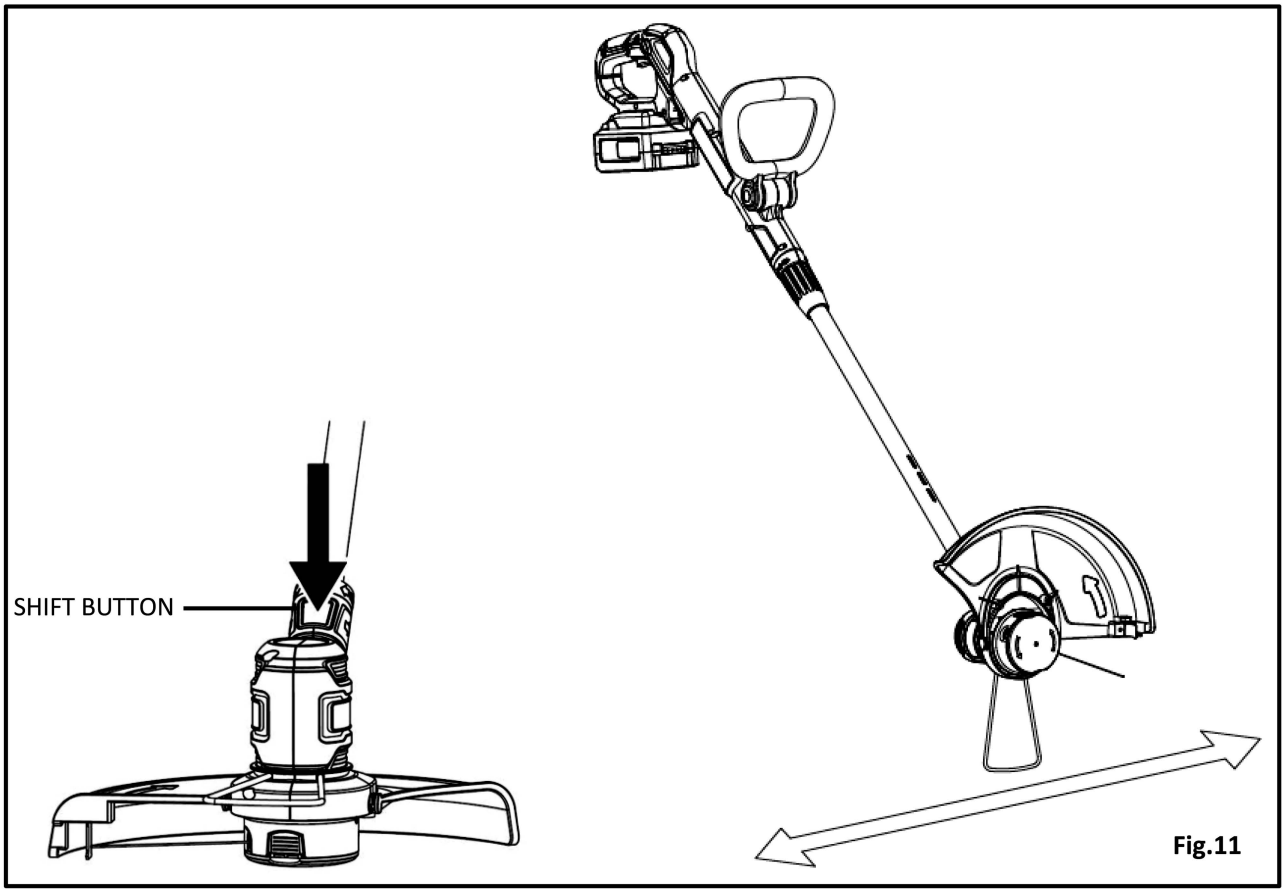

Fig.11

10. OPERATIONS

Working with flower guard (See Fig.12)

WARNING

The trimmer head may continue to rotate briefly after you switch off the string trimmer. Wait for the trimmer head to come to a complete stop before adjusting the flower guard. Do not adjust it with your foot.

The flower guard can limit the cutting range of the cutting line and reduce the risk of the rotating cutting line causing damage.

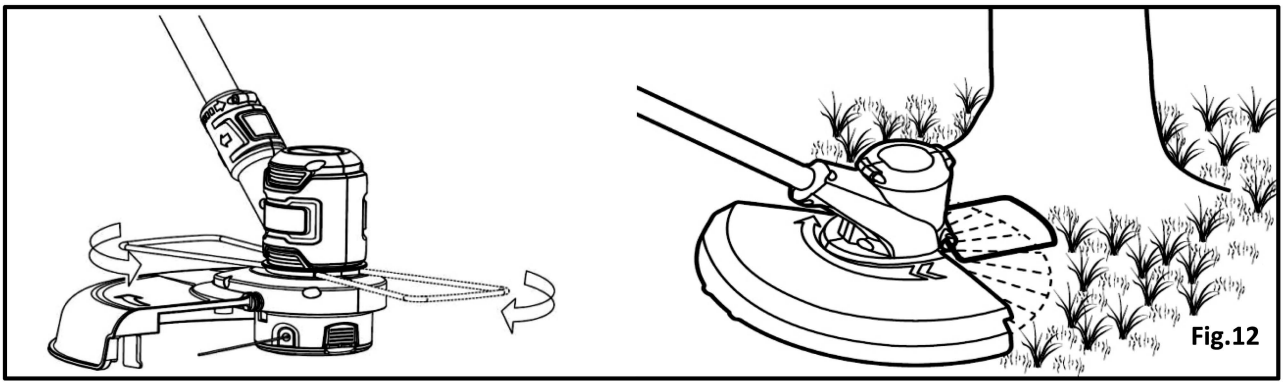

Fig.12

11. ENVIRONMENTAL PROTECTION

Waste electrical products should not be disposed of with household waste. Please recycle where facilities exist. Check with your Local Authority or retailer for recycling advice.

12. MAINTENANCE

WARNING

When servicing, use only identical replacement parts. Use of any other parts may create a hazard or cause product damage.

WARNING

Always wear safety goggles or safety glasses with side shields that comply with ANSI Z87.1 standard in the USA or EN166 in EU countries during power tool operation. If operation is dusty, also wear a dust mask.

WARNING

Before inspecting, cleaning or servicing the unit, stop the motor, wait for all moving parts to stop, and remove the battery. Failure to follow these instructions can result in serious personal injury or property damage.

GENERAL MAINTENANCE

Avoid using solvents when cleaning plastic parts. Most plastics are susceptible to damage from various types of commercial solvents and may be damaged by their use. Use clean cloths to remove dirt, dust, oil, grease, etc.

WARNING

Do not at any time let break fluids, gasoline, petroleum-based products, penetrating oils, etc., come in contact with plastic parts. Chemicals can damage, weaken, or destroy plastic, which may result in serious personal injury. Periodically, clean all foreign material from the trimmer head vents. You can often make repairs described here. For other repairs, have the trimmer serviced by an authorized service dealer.

SPOOL REPLACEMENT(See Fig.13**)**

Use only 0.65in diameter monofilament. Use original manufacturer's replacement cutting line for best performance.

- Remove the battery.
- Push in tabs on side of spool retainer.
- Pull spool retainer up to remove.
- Remove spool.
- To install the new spool, make sure the cutting line is captured in the slots opposite on the new spool.
- Install the new spool so that the cutting line and slots align with the eyelets in the trimmer head. Thread the cutting line into the eyelets.
- Pull the cutting line extending from the trimmer head so the cutting line releases from the slots in the spool.
- Reinstall the spool retainer by depressing tabs into slots and pushing down until spool retainer clicks into place.

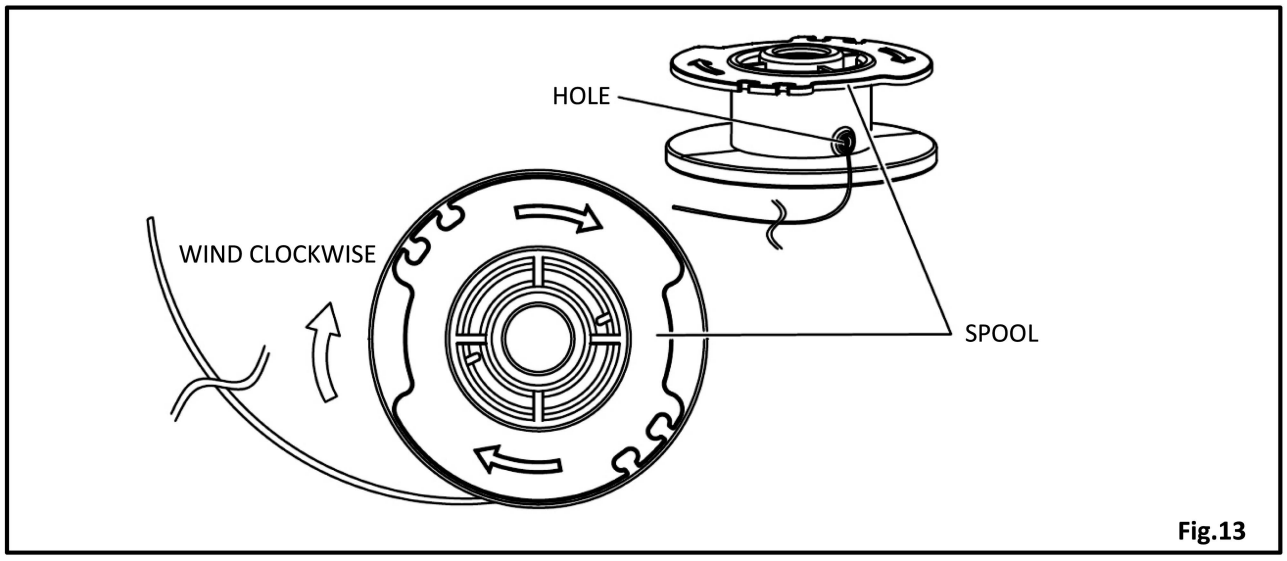

Fig.13

12. MAINTENANCE

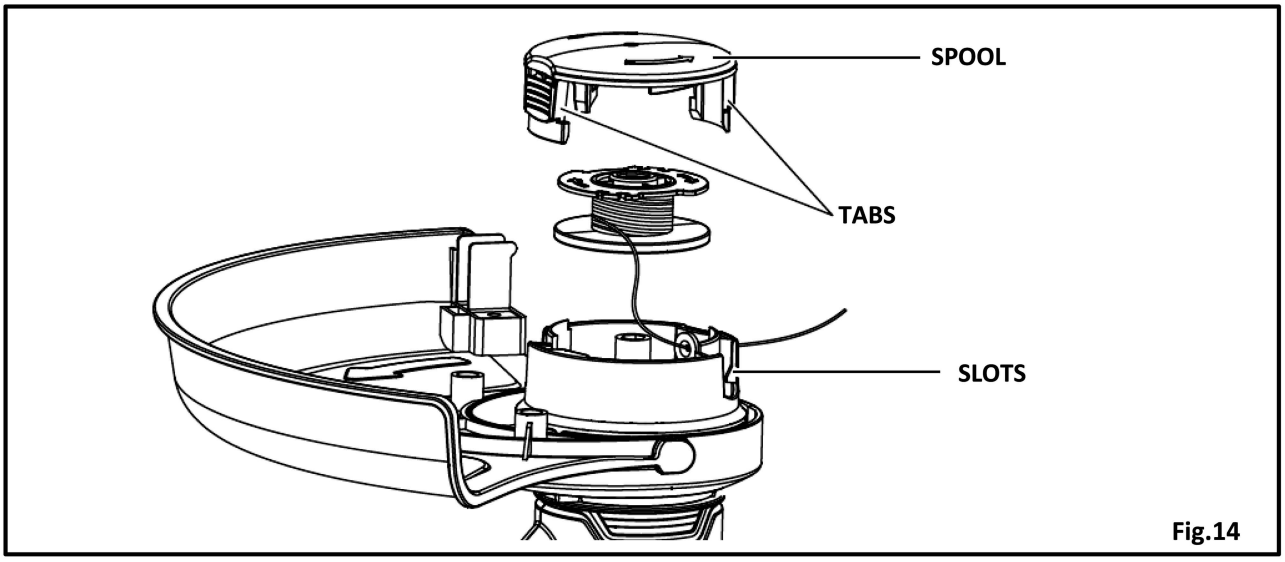

Fig.14

CUTTING LINE REPLACEMENT (See Fig. 13 - 14)

• Remove the battery.

• Remove the spool from the trimmer head.

NOTE: Remove any old cutting line remaining on the spool.

• Use only .065 in. (1.65mm) diameter monofilament cutting line.

• Inset the new nylon cutting line the hole in the spool, then wind the cutting line around the spool in the direction as shown by the arrows on the spool.

After winging the cutting,line, there should be at least 6in. between the wound cutting line and the outside edge of the spool.

• Feed the cutting line through the eyelets to come out of the housing.

• Replace the plastic retainer, spool, and the spool retainer.

• Reinstall the spool retainer by depressing tabs into slots and pushing down until spool retainer clicks into place.

STORING THE TRIMMER

• Open telescoping boom coupler and set at shortest setting.

• Clean all foreign material from the trimmer.

• Store it in a place that is inaccessible to children.

• Keep away from corrosive agents such as garden chemicals and de-icing salts.

•When not in use, store the equipment indoors in dry and high or locked-up place - out of the reach of children. Clean and maintain before storage.

13. TROUBLESHOOTING

PROBLEM	POSSIBLE CAUSE	SOLUTION
Cutting line will not advance when using the Auto Feed Head:	1. Cutting line are welded to themselves. 2. Not enough cutting line on spool. 3. Cutting line are worn too short. 4. Cutting line are tangled on spool.	1. Lubricate with silicone spray. 2. Install more cutting line . Refer to **Cutting Line Replacement** earlier in this manual. 3. Pull cutting line while alternately pressing down on and releasing spool retainer. 4. Remove cutting line from spool and refer to Cutting **Line Replacement** earlier in this manual.
Grass wraps around drive shaft housing and grass head.	1. Cutting tall grass at ground level.	1. Cut tall grass from the top down to prevent wrapping.
Motor fails to start when switch trigger is depressed.	Battery is not secure Battery is not charged.	To secure the battery pack, make sure the latches on the top of the battery pack snap into place. Charge the battery pack according to the instructions included with your model.

14. EC DECLARATION

1) Herewith we, Zhejiang Zhongjian Technology Co., Ltd.
No.155 Mingyuan North AVE, Economic Development Zone, Yongkang, Zhejiang, 321300, P.R. China
declare that the following appliance complies with the appropriate basic safety and health requirements of the EC Directives based on its design and type, as brought into circulation by us.

This declaration relates exclusively to the machinery in the state in which it was placed on the market, and excludes components which are added and/or operations carried out subsequently by the final user.

2) Designation/ function: Battery string trimmer

3) Type: PST120

4) Serial number: MM/YY-XXXXX

5) Applicable EC Directives: Machinery Directive 2006/42/EC

6) Used harmonized Standards: EN 62841-1:2015, FprEN IEC 62841-4-4:2020

7) Additional used EC Directives: EMC Directive 2014/30/EU on electromagnetic compatibility
Noise Directive 2000/14/EC as amended by Directive 2005/88/EC on the noise emission in the environment by equipment for use outdoors
2011/65/EU as amended Directive (EU) 2015/863 Restriction of the use of certain hazardous substances in electrical and electronic equipment

8) Used other technical standards/ specifications: EN 55014-1:2017+A11:2020, EN 55014-2:2015

9) Responsible for documentation:

10) EC type approval: XXXXXXXXX-01 Intertek Deutschland GmbH (NB 905) Stangenstraße 1, 70771 Leinfelded-Echterdingen

Measured sound power level 95.1 dB(A)
Guaranteed sound power level 96 dB(A)
Conformity assessment method to Annex V/ Directive 2000/14/EC and 2005/88/EC

11) Date /Place/Name/ Authorized Signature:
2022-02-12/ Yongkang/ Yang Haiyue

12) Title of Signatory:
Chief Engineer

PRORUN regularly improves our products, and you may find slight difference between your machine and descriptions contained within this operator's manual. Modifications can be made to the machine without notice and without the obligation to update the manual, providing that the essential safety and functional characteristics remain unaltered. Contact PRORUN Customer Service with any questions and for current specifications.

PRORUN / TOPSUN USA
200 Overhill Drive, Suite A
Mooresville, NC 28117
Proruntech.com
info@proruntech.com
Phone: 1-844-905-0882



Zhejiang Zhongjian Technology Co., Ltd
Web: www.topsunpower.cc
E-mail: sales@topsunpower.cc
ADD: No.155 Mingyuan North AVE, Economic Development Zone,
Yongkang, Zhejiang, 321300, P.R.China
Made In China