Owner's Manual

Age: 3-8 years
Max Weight: 45kg/100 lbs
Maximum Speed: 3.1 MPH
Battery: 6 volt

KID TRAX®

WIGGI ZIGGI 6V RIDE ON

ITEM # KT304-6V Wiggi Ziggi 6V Ride on - White / Arctic Wave Blue -WM
ITEM # FB25091AE 6V Spiderman Wiggle Car
ITEM # FB25090AE 6V Frozen Wiggle Car

3-8 years

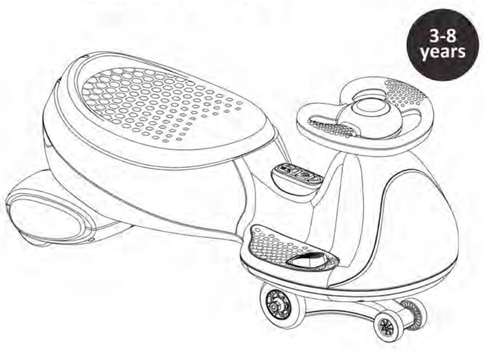

We at Flybar, Inc. value the safety of all of our children and recommend the use of an approved safety helmet when using this toy.

⚠ WARNING
This manual contains important safety and use information. Keep this manual for future reference.
- An adult must read this entire manual
- Adult supervision is required at all times

⚠ ATTENTION
This product is packed with the battery disconnected. Connect the battery before use.

Made in China

About Your New Vehicle

Battery	6V 4Ah
Suitable Age	3-8 years
Load Capacity	45kg/100lbs
Size of Car	76.5 L *33.5 W *40.5 H cm
Speed	Minimum: 1.9 | Maximum: 3.1mph
Charging Time	5-8 hours
Charger	INPUT: 100-240V OUTPUT: 7.5V 500mA
Fuse	Auto-reset fuse

Safety Information

⚠ WARNING

- It should be used under adult guidance.
- Parents should ensure that children have taken the safety measures before use.
- The toy should be used with caution since skill is required to avoid falls or collisions causing injury to the user or third party.
- Products should be assembled by an adult.
- Protective equipment should be worn.
- Not to be used in traffic.
- Not suitable for children under 3 years. Choking hazard- small parts. In unassembled state, contains potentially hazardous small parts. Please keep out of the reach of small children.
- Pay attention to the potential hazards of using the toy in areas other than private grounds.

⚠ WARNING

Prevent Injuries and Deaths
- Direct adult supervision required
- Never ride at night
- Keep children within safe riding areas.

These areas must be:
- Away from swimming pools and other bodies of water to prevent drownings
- Generally level to prevent tip overs
- Away from steps, steep inclines, cars, roads and alleys

Riding rules:
Make sure children know and follow these rules for safe driving and riding.
- Always sit on the seat
- Always wear shoes
- Only 1 (one) rider at a time

Safety Information

⚠ WARNING

General safety:
- Where products need assembly they must always be assembled by an adult. As a parent/carer, it is also your responsibility to check the tightness of screws, nuts and bolts before each use and if necessary, adjust and re-tighten.
- This product may contain small parts and it is your responsibility as a parent/carer to exclude children from the area during assembly due to small parts.
- Remove protective material and poly bags and dispose of them responsibly before giving the assembled product to your child.
- Remember to retain these instructions for future reference.

Positioning:
- Do not allow your child to ride at night or in poor light conditions.
- Do not let your child play near steps, swimming pools/ spas or other sources of water, on slopes, on streets or around cars, even if parked on your own property.
- It is prohibited to drive/use this product on the public roads..
- this product is designed to be used on smooth surfaces and should not be used on soft ground or in the rain or snow. May not be suitable for carpet driving.

Before Use:
- **Very Important! You Must Charge The Battery Fully Before The First Use.**
- Dispose of all packaging material responsibly before giving this product to your child.
- Check tightness of all components before giving this product to your child.

During Use:
- This product is only suitable for children 3 years and older.
- The toy should be used with caution since skill is required to avoid falls or collisions causing injury to the user or third parties.
- The maximum rider weight capacity for this product is 45kg/100lbs. Overload may damage this product
- Adult supervision is highly recommended when children play with wheeled toys. Please take care of your child.
- Do not allow the child to ride with bare feet or without suitable footwear.
- Ensure the child keeps clothing, hands, hair, fingers and feet away from moving parts.
- The use of protective gear including approved helmets, gloves and pad is recommended.
- Store this product at room temperature; do not leave it outside or uncared for.
- Never let any child play with the battery or charger at any time, or let them charge the product.
- Do not use if product is faulty or damaged.
- Do not tamper with the battery or electrical parts inside the product.

Safety Information

⚠ WARNING

- **PREVENT FIRE AND ELECTRIC SHOCK:**
  - Use the only rechargeable battery and charger supplied with your vehicle. NEVER substitute the battery or the charger with another brand. Using another battery or charger may cause a fire or explosion.
  - Do not use the battery or charger for any other product. Overheating, fire explosion or explosion could occur.
  - NEVER modify the electric circuit system. Tampering with the electric system may cause a shock, fire or explosion or may permanently damage the system.
  - Do not allow direct contact between battery terminals. Fire or explosion can occur.
  - Do not allow any type of liquid on the battery or its components.
  - Do not charge near heat or flammable materials. Charge the battery in a well-ventilated area ONLY.
  - Charge the battery in a dry area ONLY.
- Do not open the battery. Battery contains lead acid and other materials that are toxic and corrosive.
- Do not open the charger. Exposed wiring and circuitry inside case may cause electric shock. Only adults may handle or charge the battery. NEVER allow child to handle or charge the battery. Battery is heavy and contains lead acid (electrolyte).
- Do not drop the battery. Permanent damage to the battery could occur or cause serious injury.
- Before charging the battery, check for wear or damage to the battery, charger, its supply cord and the connectors. DO NOT charge the battery if any damage to parts has occurred.
- Do not allow the battery to drain completely. Recharge the battery after each use or once a month if not used regularly.
- Do not charge battery upside down.
- Always secure the battery with the bracket. Battery can fall out and injure a child if vehicle tips over.
- A recommendation for adult supervision of young children.
- The toy should be used with caution since skill is required to avoid falls or collisions causing injury to the user or third parties.

6mm **WARNING!**

4mm **RISK OF FIRE. Do not bypass the fuse. If the resettable fuse needs to be replaced, be sure to replace ONLY with a type 68 Series 5A 125/250VAC 50/60HZ 50VDC TC2/OL1/U1 resettable fuse.**

Parts List

1 Vehicle Body x1

4 Steering Wheel x1

M5 Nut x1 M5X35 Bolt X1
*With nut and bolt pre-installed in steering wheel

2 Bogie x1

M5 Nut M5X46 Bolt x1
*With nut and bolt pre-installed in bogie

5 Instruction Manual

3 Square Tube x1

6 Charger x1

Parts Diagram

1	Vehicle Body * 1	3	Square Tube * 1
2	Bogie * 1	4	Steering Wheel * 1

Tools Required
Screwdriver (not included)

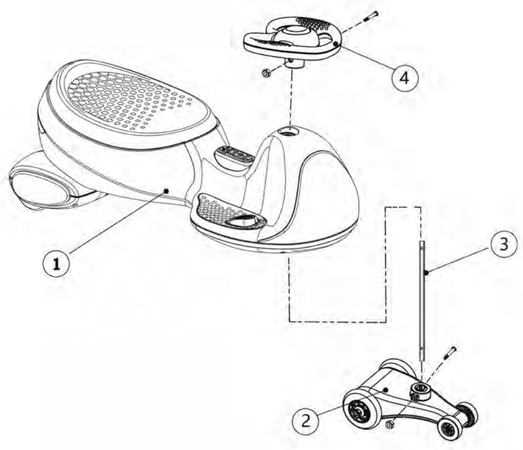

Assembly Steps

1. Install the square tube into the bogie.

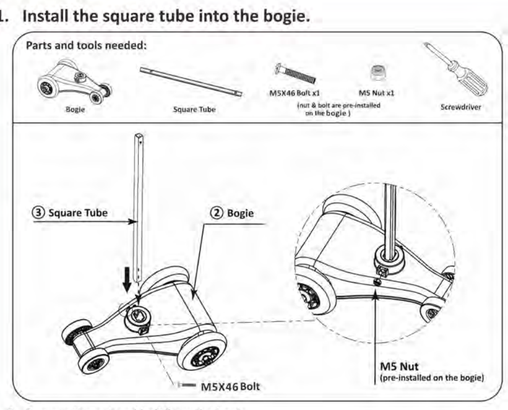

A. Remove the nut and bolt from the bogie.
B. Insert the square tube into the bogie, align the hole of the square tube with the hole of the bogie, put a bolt through the holes, and fasten the nut.

2. Install the bogie into the body.

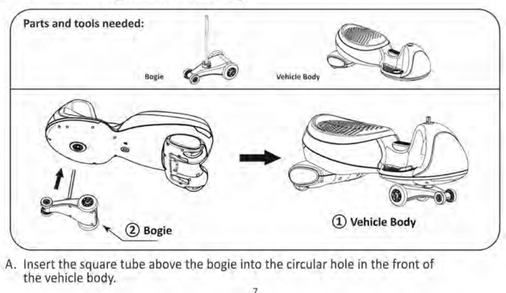

A. Insert the square tube above the bogie into the circular hole in the front of the vehicle body.

Assembly Steps

3. Install the steering wheel.

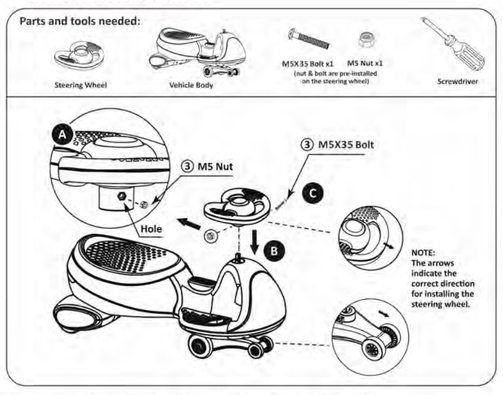

A. Unscrew the bolt from the steering wheel, leaving the nut in place.
B. Place the steering onto the square tube as shown above (paying close attention to the steering wheel shape position in the image above).
C. Align the hole in the steering wheel with the hole in the tube. Insert the bolt and tighten.
D. Assembly Complete

Battery Connection – First Time Setup

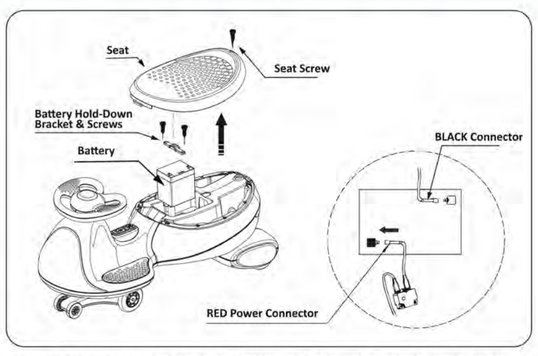

All cars are shipped with the battery disconnected for safety during transportation. Please follow the steps below before first use.

Before You Begin
- Turn OFF the car.
- Place the product on a flat, stable surface.

Connecting the Battery
1. Using a screwdriver, remove the **seat screw.**
2. **Lift off the seat** to access the battery compartment.
3. **Carefully connect the RED connector.**
4. Make sure the connections are fully secure and properly aligned.
   ⚠ **WARNING:** Ensure no wires are pinched or trapped.
5. **Install the seat and fasten the seat screw.**

Note:
- **Always ensure proper RED / BLACK connections before operating the product.**

Charging Your Vehicle

Step 1
Locate the charging port on the bottom center of the car body.

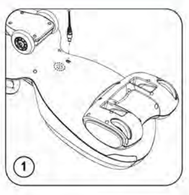

Step 2
Make sure the power is OFF, then plug the charger connector into the charging port.

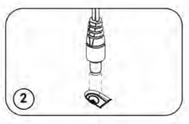

Step 3
Plug the charger into a wall outlet. The indicator light on the charger will turn **red** to show charging has started. **When the indicator light turns green, the battery is fully charged.**

*Battery needs to be charged for the first time:**5-8 hours**
*Average charging time after the first time: **5-8 hours**

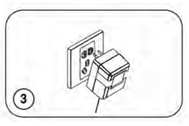

⚠ Do not charge the battery for more than 20 hours.

⚠ Do not immerse the charger or battery in water.

⚠ Disconnect the battery for long-term storage.

How to Operate Your Vehicle

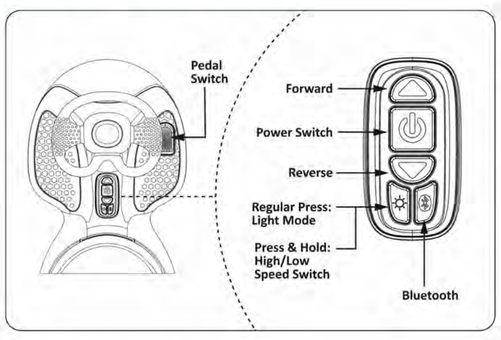

1. Turn on the power switch
2. **Forward:** Press the forward button. Then press the pedal to drive forward.
3. **Reverse:** Press the reverse button. Then press the pedal to drive backward.
4. **Light / High-Low Speed Button:** A short press of the light button will change the lighting effect between patterns. Press and hold the same button for 3 seconds to change between high and low speeds. High and low speed switching works only in forward gear.
5. **Bluetooth:** Press and hold the Bluetooth button for 3 seconds to enter pairing mode, you will hear a prompt. Press and hold for 3 seconds again if you prefer to disconnect.
6. **Sleep mode:** If the product is inactive for 10 minutes, it will automatically enter sleep mode and the lights will turn off. To reactivate the lights, step on the pedal or press the light button.

IMPORTANT:
- **Always stop the vehicle completely before changing direction to prevent rollover and damage to the gearbox and motor.**
- **Do not use the product on carpet, grass, gravel, or other rough surfaces, as this may reduce performance and the vehicle may not move properly.**
- **Factory may ship battery disconnected — ensure proper red/black connection (see page 9).**

Battery Replacement

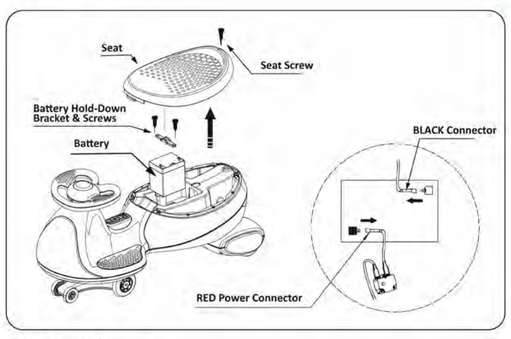

Drive Battery Replacement
- Before You Begin
  - Turn OFF the car.
  - Place the product on a flat, stable surface.

Removing the Battery
1. Using a screwdriver, remove the **seat screw.**
2. **Lift off the seat** to access the battery compartment.
3. Remove the battery hold-down bracket and screws.
4. **Carefully unplug both the RED and BLACK connectors.**
5. **Carefully lift out the battery.**

⚠ Important Safety Notes
- If the battery shows any signs of leakage or damage, wear protective gloves before handling.
- Do not lift the battery by the connectors or wires.
- Place the dead battery in a plastic bag and dispose of it according to local regulations.

Installing the New Battery
1. **Place replacement battery in same location as original.**
2. **Carefully reconnect both the BLACK and RED connectors.**
3. Install the battery hold-down bracket and screws.
   ⚠ **WARNING:** Ensure no wires are pinched or trapped.
4. **Install the seat and fasten the seat screw.**

Troubleshooting

PROBLEM	POSSIBLE REASON	SOLUTION
Vehicle does not move	Low battery	Fully charge the battery
	Disconnected / Badly connected battery	Reconnect the battery
	Failed battery / engine	Contact customer service
Vehicle does not run very long	Low battery	Fully charge the battery
	Old battery	Replace battery if necessary
Vehicle runs very slow	Low battery	Fully charge the battery
	Old battery	Replace battery if necessary
	Vehicle is overloaded	Make sure user's weight is under 45 kg / 100 lbs
	Vehicle is being used in harsh environment	Avoid using the vehicle in harsh environment
Vehicle needs a push to go forward	Poor wire connection	Check if the battery connectors are firmly connected. Contact customer service if necessary
	"Dead spot" on motor	Contact customer service
Loud grinding sound or clicking sound from the motor or gear box	Damaged motor or gear box	Contact customer service
Battery does not charge	Disconnected / badly connected battery	Reconnect the battery
	Disconnected / badly connected charger	Make sure the charger is firmly plugged into the power source and connected to the charging port
	Charger not working	Contact customer service
Charger feels warm with charging	Normal	Normal operation

Care & Maintenance

- Check your Wiggi Ziggi car regularly and make sure there are no missing or loose parts.
- Check for any broken or cracked plastic parts.
- When the product is not in use for an extended period, cover it and store it away from heat and/or damp or wet conditions.
- If the product will not be used for a long time, disconnect the battery terminals. Before using the product again, reconnect the battery and fully charge it. To maintain optimal performance, make sure the battery is charged at least **once every month.**
- Disconnect the battery wires if the toy will not be used for a long period of time.
- Clean the Wiggi Ziggi car with a cloth and non-wax furniture polish to restore the plastic to a shine. Do not use abrasive cleaners.
- Do not wash the Wiggi Ziggi car with a hose or immerse any parts in water.

Service

Do not return this product to the place of purchase. If your ride-on toy needs service, repairs or replacement parts, call:
Flybar, Inc. Customer Service
Phone: 1-800-764-6784
Email: info@flybar.com

For a complete list of replacement parts, please contact Flybar, Inc. Customer Service. To order parts, please have the model and serial number available.

FCC Information

⚠ WARNING
Any changes or modifications to this unit not expressly approved by the party responsible for compliance could void the user's authority to operate the equipment.

NOTE
This equipment has been tested and found to comply with the limits for a Class B digital device, pursuant to part 15 of the FCC Rules. These limits are designed to provide reasonable protection against harmful interference in a residential installation.
This equipment generates, uses and can radiate radio frequency energy and, if not installed and used in accordance with the instructions, may cause harmful interference to radio communications. However, there is no guarantee that interference will not occur in a particular installation. If this equipment does cause harmful interference to radio or television reception, which can be determined by turning the equipment off and on, the user is encouraged to try to correct the interference by one or more of the following measures:
• Reorient or relocate the receiving antenna.
• Increase the separation between the equipment and receiver.
• Connect the equipment into an outlet on a circuit different from that to which the receiver is connected.
• Consult the dealer or an experienced radio/TV technician for help.

This device complies with part 15 of the FCC Rules. Operation is subject to the following two conditions:
(1) This device may not cause harmful interference.
(2) This device must accept any interference received, including interference that may cause undesired operation.

Warranty Limitations

Limitation of warranties and other warranty terms:
Any implied warranties, including implied warranties of merchantability and fitness for a particular purpose, shall be limited to the duration and terms of this express written warranty. Some states do not allow limitations on the exclusion or limitation of incidental or consequential damages, so the above limitation may not apply to you. This warranty gives you specific legal rights, and you may also have other rights, which vary from state to state.
Neither Flybar, Inc. nor the dealer selling this product authorizes any person to create for it any other warranty, obligation, or liability in connection with this product.

Limited Warranty Terms

Six-month Limited Warranty on Ride-On product and battery
Flybar, Inc. warrants this product to the original retail purchaser as follows: The ride-on product and battery are warranted against defective materials or workmanship for six months from the date of actual delivery of the product. An original receipt is required to validate your warranty. Flybar, Inc. will, at its option, provide replacement parts or replace this product. Flybar, Inc. reserves the right to substitute if the part or model has been discontinued. To make a claim under this warranty you must contact us directly. Proof of purchase is required, and shipping/transportation charges are the responsibility of the consumer.

What does this Limited Warranty cover?
This Warranty covers all parts of the electric ride-on toy to be free from defects in workmanship and materials. This Warranty is only effective if:
- The ride-on toy is used under normal conditions for its intended purposes, by a person that properly fits and is capable of controlling the vehicle.
- The ride-on toy receives all necessary maintenance and adjustments.

What is not covered by this Limited Warranty?
This Warranty does not include labor and transportation charges. You, the original purchaser will be responsible for labor or transportation charges associated with the repair or replacement of any parts found to be eligible for warranty coverage. This Warranty does not cover any damage caused by crash, collision, misuse, abuse, neglect, improper assembly, improper maintenance, lack of maintenance, alteration, or any similar damage to the ride-on toy. For personal use only. Not for commercial use.

This Warranty will be void if the ride-on product is ever:
- Installed with a motor or modified in any other way.
- Used in a manner contrary to the instructions in the manual included with this product.
- Flybar, Inc. will not be liable for incidental or consequential loss or damage, due directly or indirectly from use of this product.

How do you make a claim under this Limited Warranty?
Warranty claims should be submitted via Flybar's online portal at www.flybar.com/pages/contact-us or via email at info@flybar.com. Please have your proof of purchase available before calling to validate your claim.

Limitation of Damages:
The warranty and remedies as set forth are exclusive and in lieu of all others, oral or written, expressed or implied. In no event will Flybar, Inc. or the dealer selling this product be liable to you for any damages, including incidental or consequential damages, arising out of the use or inability to use this product. Some states do not allow limitations as the exclusion or limitation of incidental or consequential damages, so the above limitation may not apply to you.

FOR ANY QUESTIONS, REPLACEMENT PARTS, OR ISSUES, PLEASE CONTACT:

FLYBAR CUSTOMER SUPPORT
Email: info@flybar.com **Phone:** 1-800-764-6784
Flybar, Inc. • 220 Centennial Ave., Piscataway, NJ 08854
www.flybar.com
© 2026 Flybar, Inc. | Made in China

LET'S CONNECT!

FACEBOOK: @FLYBAR
INSTAGRAM: @FLYBARINC
PINTEREST: @FLYBAR,INC
TIKTOK: @FLYBARINC

SHOP FLYBAR.COM

Flybar®

© 2026 Flybar, Inc.
Piscataway, NJ 08854