Form No. 3375-537 Rev A

Drift Breaker Kit

24-inch and 26-inch Power Max Snowthrowers

Model No. 38213

Installation Instructions

Installation

Loose Parts

Use the chart below to verify that all parts have been shipped.

Description	Qty.	Use
Side drift breaker	2	Install the drift breaker.
Carriage bolt	4	
Flange nut	4	

Note: Visit www.Toro.com and download the French *Operator's Manual* that corresponds to the model and serial number of the product on which this kit is installed.

Installing the Drift Breaker on the Snowthrower

Mount a side breaker to each side of the housing with 2 carriage bolts and 2 flange nuts (Figure 1).

The side breakers can be adjusted by loosening the carriage bolts and flange nuts and sliding the breaker up or down.

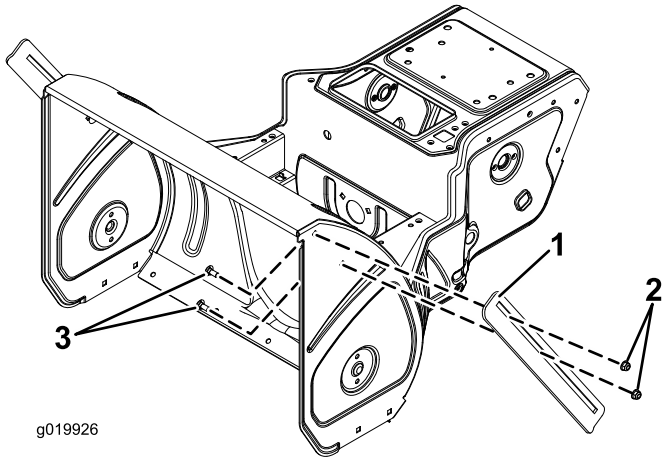

Figure 1

1. Side breaker
2. Flange nuts
3. Carriage bolts

© 2012—The Toro® Company
8111 Lyndale Avenue South
Bloomington, MN 55420

Register at www.Toro.com.

Original Instructions (EN)
Printed in the USA.
All Rights Reserved

3375-537 A