INDUCTION HARDWARE

User Care Guide

Rangetops



Induction Hardware aims to be the industry leader in electric and induction appliances. Every single Induction Hardware product is electric and focused on bringing a better way to cook. We believe the future of cooking is electric, not just because it is safer, cleaner and more efficient, but because it is an upgrade in nearly every way. Induction technology is the future of cooking.

APPLIANCE SHOWROOM:

WWW.INDUCTIONHARDWARE.COM
12920 OLD VIRGINIA ROAD, SUITE 160
RENO, NEVADA 89521, USA

CONTACT:
(775) 898-7562
SUPPORT@INDUCTIONHARDWARE.COM

Table of Contents

Quick Start Guide **2**

Rangetop Safety Instructions 3
Control Panel 4
Cooktop Use & Burner Sizes 5
Product Dimensions 6

Installation Guide **7**

Cabinet Cutouts 8
Making Electrical Connection 9
Cleaning 11
Troubleshooting 12

INDUCTION HARDWARE
www.inductionhardware.com

12920 OLD VIRGINIA ROAD, SUITE 160
RENO, NEVADA 89521, USA


INDUCTION
HARDWARE
THE ELECTRIC APPLIANCE COMPANY

Quick Start Guide



Induction is the new electric.

Induction cooking uses electromagnetic fields to directly heat pots and pans, making it faster, more energy-efficient, and more precise than traditional electric ceramic cooktops, which heat by transferring heat from a coil through the glass surface. Unlike ceramic cooktops, induction surfaces stay cooler to the touch and allow for instant temperature control.

Rangetop Safety Instructions



This is the safety alert symbol.

This symbol alerts you to potential hazards that can kill or hurt you and others. All safety messages follow the safety alert symbol and one of the following words:

- **DANGER!** - You can be killed or seriously injured if you do not immediately follow instructions.
- **WARNING!** - You can be killed or seriously injured if you don't follow instructions.
- **CAUTION!** - Hazards or unsafe practices COULD result in minor personal injury if you don't follow instructions. Always read and obey all safety messages

Always read and obey all safety messages.

To reduce the risk of fire, electrical shock, injury to persons, or damage when using the cooktop, follow basic precautions, including the following safety and warnings.

DO NOT store items in cabinets above the cooktop that is of interest to children. Children climbing on the cooktop to reach items could be seriously injured.

THIS PRODUCT IS INTENDED FOR HOUSEHOLD USE ONLY.

Be sure your cooktop is properly installed and grounded by a qualified technician.

DO NOT repair or replace any part of the cooktop unless specifically recommended in the manual. All other servicing **SHOULD** be referred to a qualified technician. Wear proper apparel. Loose-fitting or hanging garments **SHOULD NEVER** be worn while using the cooktop.

DO NOT store flammable materials near cooktop or surface burners.

Utensil handles **SHOULD** be turned inward and not extend over adjacent surface units. To reduce the risk of burns, ignition of flammable materials and spillage due to unintentional contact with the utensil, the handle of a utensil SHOULD be positioned so that it is turned inward, and does not extend over adjacent surface units.

DO NOT use water on grease fires. Smother fire or flame or use dry chemical or foam-type extinguisher. **NEVER** leave surface units unattended at high heat settings. Boilover causes smoking and greasy spillovers that may ignite.

NEVER leave surface units unattended at high heat settings. Boilover causes smoking and greasy spillovers that may ignite.

Children **SHOULD NOT** be left alone or unattended in the area where the cooktop is in use. They **SHOULD NEVER** be allowed to sit or stand on any part of the cooktop.

DO NOT touch surface units or areas near units. Surface units may be hot even though they are dark in color. Areas near surface units may become hot enough to cause burns right after cooking due to residual heat in the glass.

DO NOT COOK ON A BROKEN COOKTOP. If the cooktop should break, cleaning solutions and spillovers may penetrate the broken cooktop and create a risk of electric shock. Contact us here at Induction Hardware immediately.

NEVER use your cooktop for warming or heating the room as prolonged exposure to the electromagnetic energy of the induction hobs can warp dry cookware over time. **IF** no cookware is present or detected then the cooktop will autoshut off.

Clean cooktop with caution. If a wet sponge or cloth is used to wipe spills on a hot cooking area, be careful to avoid steam burn. Some cleaners can produce noxious fumes if applied to a hot surface.

Control Panel

This manual covers several different models. The rangetop you have purchased may have some or all of the items listed. The locations and appearances of the features shown here may not match those of your model.

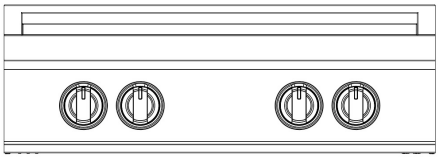

30inch Rangetop
- 4 knobs for 4 cooktop induction burners control

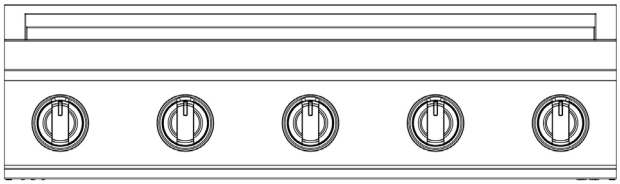

36inch Rangetop
- 5 knobs for 5 cooktop induction burners control

48inch Rangetop
- 7 knobs for 7 cooktop induction burners control

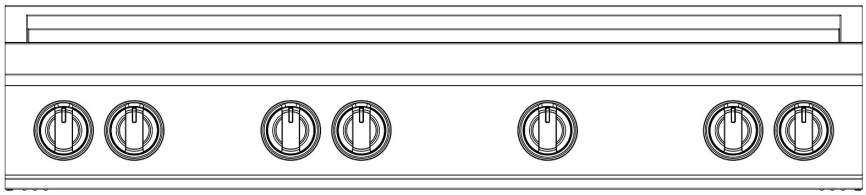

Cooktop Use

1. **Begin** by placing an induction suitable pan onto the cooking zone you are going to use. Unsure if a pan is suitable for induction? Place a magnet to the bottom of it. If the magnet sticks to the bottom, then the pan is suitable for induction. If the magnet does not stick, then that pan is not suitable for induction, unfortunately. Pans such as cast iron, carbon steel, and stainless steel work very well.

2. **Turn on the heating zone** with the cooresponding knob on the control panel (turning clockwise). Ensure the cooktop's surface and the bottom of the pan are clean and dry, first.

3. **Adjust the power** level up & down by turning the control knob clockwise/counter-clockwise. The power levels range from 1-9 as well as Boost (P) settings. You can modify the power level at any time.

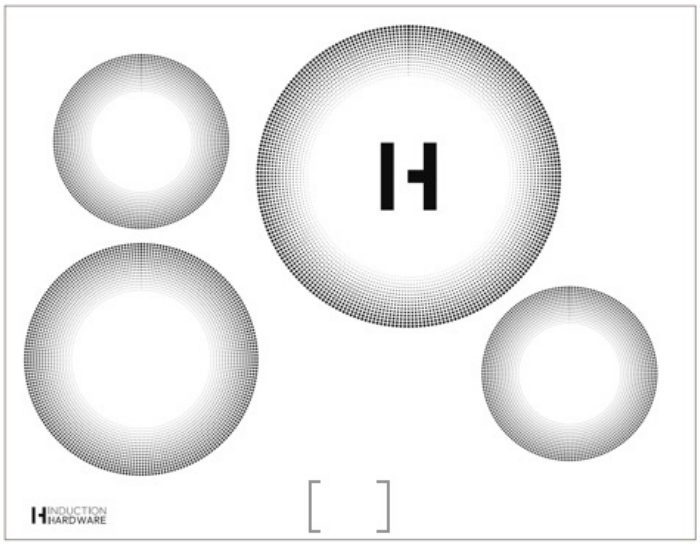

Size	Diameter	Standard	Boost
Small	6.3"	1200W	1500W
Medium	7"	1800W	2100W
Large	10.5"	2300W	3700W

Icons & Symbols: Function - displayed within this diagram on cooktop: [ ]	
u	The burner is activated but not in use.
H	"H" is the cooking zone is too hot to touch. It will disappear when the surface has cooled down to a safe temperature.
P	Boost is activated
L	Child lock is activated
A	Automatic Quick Heating Function is activated
1 2 3 4 5 6 7 8 9	Power Indicator

4. **Child lock function**
When the induction burner is turned on, to activate the child lock function with the control knobs: ensure all knobs are in the OFF position, then simultaneously rotate the first and second knobs on the left to the "A" position and hold for 2 seconds.

Note: For the 48inch range, the child lock for the left two burners is activated by the first and second knobs on the left. For other burners, simultaneously turn the third and fourth knobs on the left to activate the child lock.
Repeating the above operation will deactivate the child lock. When the child lock is activated, the knob controls become ineffective. After any other operation, all digital displays will show "L" for 2 seconds to prompt the user that the child lock is engaged, then resume displaying the induction cooker's original working status.

5. **Auto Rapidheat Function**
The Auto Rapidheat function helps users quickly heat food or liquids, then automatically reduces the heating level to the preset setting. When the knob is turned to the "A" position and held for 0.5 seconds, the burner's digital display will constantly show "A", indicating successful activation. Then, turn the knob to the desired position. During rotation, the corresponding position number should flash. After confirming the position, the number will flash for 5 seconds before the induction cooker starts working. At this time, the display will alternately flash between "A" and the selected position number. To deactivate the function, rotate the knob to position "0" and hold for 5 seconds to automatically turn it off. When the rapid preheat function ends, the burner's digital display will constantly show the set power number. The Auto Rapidheat function will automatically activate power 9 for heating.This function only supports activation in power 1-8.

6. **Boost Function**
All burners are equipped with the Boost function, which is activated by rotating the knob to the "P" position. The burner's digital display will show "P" to indicate activation. To exit the Boost function, rotate the knob to "P" again, and it will automatically switch to power 9. Alternatively, turn the knob to the OFF position to shut it off. Each burner's Boost function is limited to 5 minutes of operation. After 5 minutes, it will automatically reduce to power 9. A maximum of 3 burners can use the Boost function simultaneously. If the induction cooker is in power limit mode and exceeds the rated power, any burner using Boost will automatically reduce its gear without an error prompt.

Product Dimensions

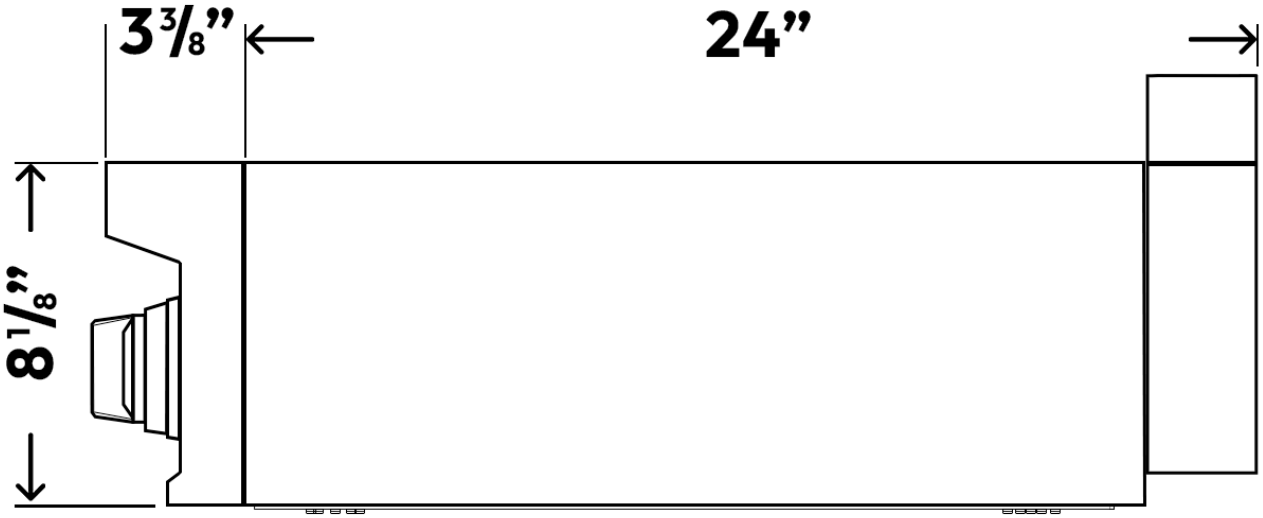

Depth: 27 3/8”
Height: 8 1/8”

Same for 30in, 36in, & 48in models

Width (30in): 29 7/8”
Width (36in): 35 7/8”
Width (48in): 47 7/8”

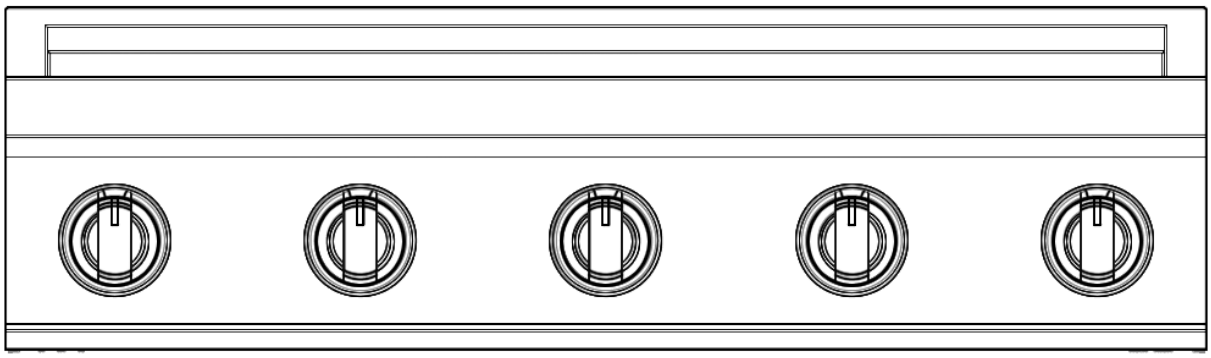

Installation Guide



Installation Made Clear.

Proper installation ensures your Induction Hardware appliance performs exactly as designed. This guide provides the key steps and requirements to help installers complete the process safely and correctly. For additional resources, installation videos, and the most up-to-date documentation, please visit our website.

Cabinet Cutout Dimensions

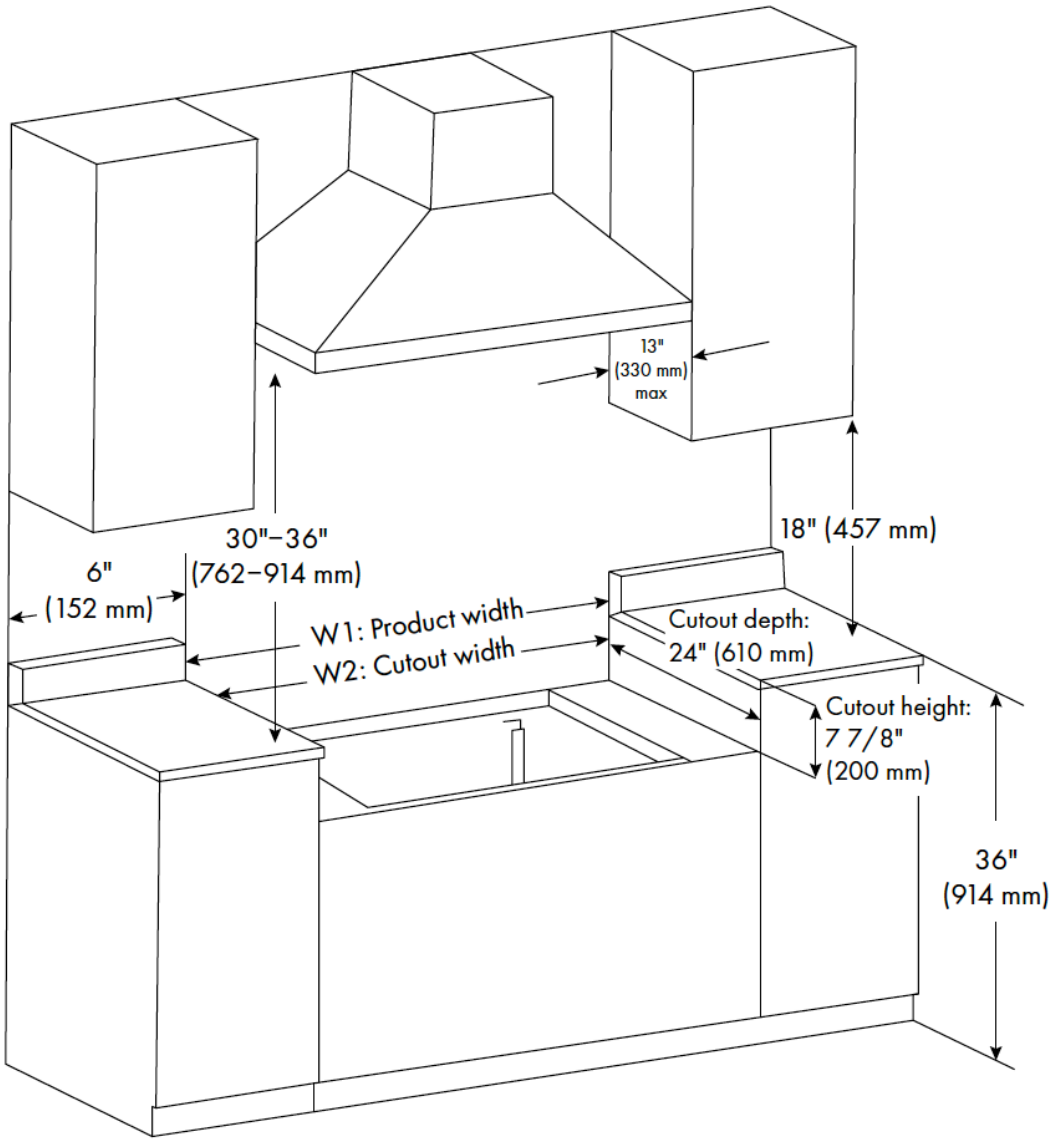

SIZE	W1	W2
30in	29 7/8”	30 1/8”
36in	35 7/8”	36 1/8”
48in	47 7/8”	48 1/8”

Make Electrical Connection

WARNING: Electrical Shock Hazard

• Disconnect power before servicing.
• Use 8 gauge copper wire.
• Electrically ground cooktop.
• Failure to follow these instructions can result in death, fire, or electrical shock.

This cooktop is manufactured with a frame connected, green or bare ground wire. Connect the cooktop cable to the junction box through the UL listed or CSA approved conduit connector.

Electrical Connection Options:

4-Wire Cable from Power Supply to 3-Wire Cable from Cooktop (refer to **figure 1**)

If your home has	You will be connecting to	Go to section
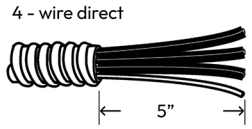	A fused disconnect or circuit breaker box	4-Wire Cable from Power Supply to 3-Wire Cable from Cooktop(this page) **Figure 1**
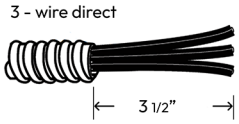	A fused disconnect or circuit breaker box	3-Wire Cable from Power Supply to 3-Wire Cable from Cooktop (next page) **Figure 2**

IMPORTANT: Use the 4-wire cable from power supply where local codes do not permit connecting the frame-ground conductor to the neutral (white) junction box wire.

Figure 1

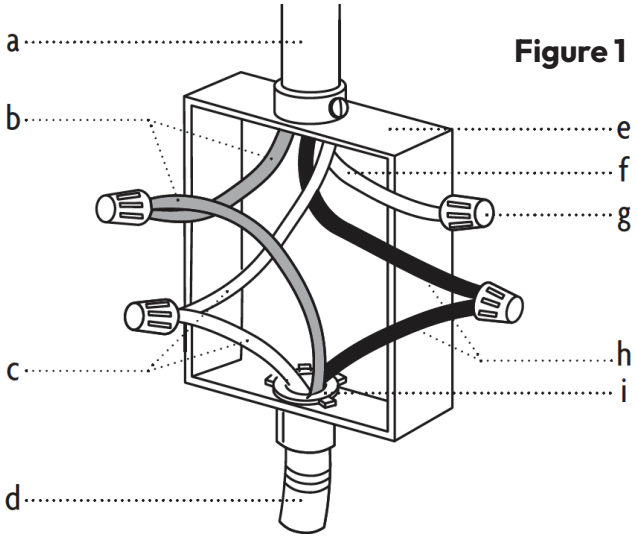

a. 4-Wire Cable from Power Supply
b. Red Wires
c. Green or Bare Ground Wire (from Cooktop)
d. 3-Wire Cable from Cooktop
e. Junction Box
f. White Wire (from Power Supply)
g. UL Listed Wire Connector
h. Black Wires
i. UL Listed or

1. Disconnect power
2. Remove junction box cover if present.
3. Connect the flexible cable conduit from the cooktop to the junction box using a UL listed or CSA approved conduit connector.
4. Tighten screws on conduit connector, if present.
5. Connect the two black wires together using the UL listed wire connectors.
6. Connect the two red wires together using the UL listed wire connectors.
7. Connect the green or bare ground wire from the cooktop cable to the green or bare ground wire (in the junction box) using the UL listed wire connectors.
8. Put a UL listed wire connector on the end of the white wire.
NOTE: DO NOT connect the bare ground wire to the neutral (white) wire in the junction box.
9. Install junction box cover.
10. Reconnect power.

Make Electrical Connection

3-Wire Cable from Power Supply to 3-Wire Cable from Cooktop (Refer to **Figure 2**). **IMPORTANT**: Use the 3-wire cable from power supply where local codes permit connecting the frame-ground conductor to the neutral (white) junction box wire.

a. 3-Wire Cable from Power Supply
b. Red Wires
c. Green or Bare Ground Wire (from Cooktop)
d. 3-Wire Cable from Cooktop
e. Junction Box
f. White Wire (from Power Supply)
g. UL Listed Wire Connector
h. Black Wires
i. UL Listed or CSA Approved Conduit Connector

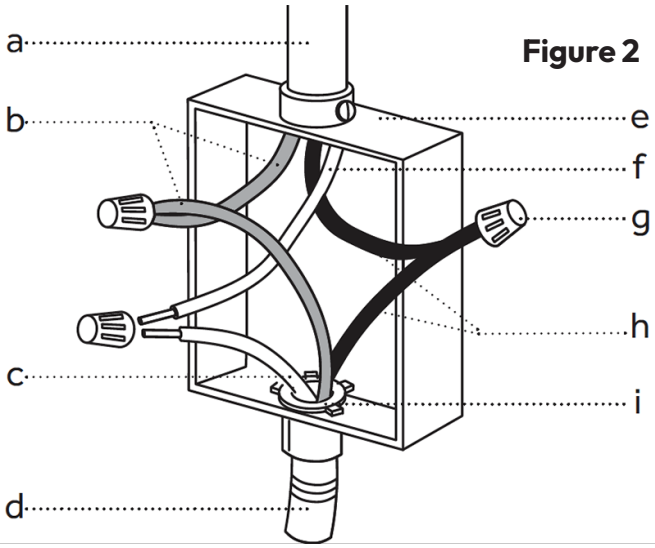

Figure 2

1. Disconnect power
2. Remove junction box cover, if present.
3. Connect the flexible cable conduit from the cooktop to the junction box using a UL listed or CSA approved conduit connector.
4. Tighten screws on conduit connector if present.
5. Connect the two black wires together using the listed wire connectors.
6. Connect the two red wires together using the UL listed wire connectors.
7. Connect the green or bare cooktop cable wires to the white (neutral) wire in the junction box using the UL listed wire connectors.
8. Install junction box cover.
9. Reconnect power.

Complete Installation

1. Check that all parts are now installed. If there is an extra part, go back through the steps to see which step was skipped.
2. Check that you have all your tools.
3. Dispose of/recycle all packaging materials.
4. Use a mild solution of liquid household cleaner and warm water to clean cooktop before use. Dry thoroughly with a soft cloth.
5. Reconnect power.

NOTE: If the cooktop does not work after turning on the power, check that a circuit breaker has not tripped



Cleaning

IMPORTANT: Before cleaning, make sure all controls are turned off, and the oven and cooktop are cool. Always follow label instructions on cleaning products. It is recommended that you first use gentle soap, water and a soft cloth or sponge unless otherwise noted.

Exterior Porcelain Enamel Surfaces
Food spills containing acids, such as vinegar and tomato, should be cleaned as soon as the entire appliance is cool. These spills may affect the finish.

Cleaning Method:
Glass cleaner, mild liquid cleaner or nonabrasive scrubbing pad: Gently clean around the model and serial number plate because scrubbing may remove numbers.

Exterior Stainless Steel
NOTE: Do not use soap-filled scouring pads, abrasive cleaners, cooktop polishing cream, steel-wool pads, gritty washcloths or some paper towels. Damage may occur, even with one-time or limited use. Rub in direction of grain to avoid damaging.

Cleaning Methods:
Liquid detergent or all-purpose cleaner: Rinse well with clean water and dry with soft, lint-free cloth. You may also use Stainless Steel Cleaner and Polish as well as Vinegar for hard water spots.

Ceramic Glass Cooktop:
IMPORTANT: To avoid damaging the cooktop, do not use steel wool, abrasive powder cleansers, chlorine bleach, rust remover or ammonia. Ceramic cooktop cleaning materials: cooktop cleaner, cooktop scraper and cooktop cleaning pads are available at most grocery stores.

To Clean the Ceramic Glass Cooktop:
1. Remove food/residue with a cooktop scraper.

• For best results, use the cooktop scraper while the cooktop is still warm, but not hot to the touch.
• It is recommended to wear an oven mitt while scraping the warm cooktop.
• Hold the cooktop scraper at approximately a 45° angle against the glass surface and scrape the residue. It will be necessary to apply pressure in order to remove the residue.
• Allow the cooktop to cool down completely before proceeding to Step 2.

2. Apply a few dime-sized drops of cooktop cleaner to the affected areas.
• Rub cooktop cleaner onto the cooktop surface with a nylon or similar cooktop cleaning pad. Some pressure is needed to remove stubborn stains.
• Allow the cleaner to dry to a white haze before proceeding to Step 3.

3. Polish with a clean, dry cloth or a clean, dry paper towel.

Cooktop Control Knobs
• Pull knobs straight out from the control panel to remove.
• When replacing knobs, make sure knobs are turned to the Off position.

Troubleshooting

Heating elements and controls do not work.	Fuse is blown or circuit breaker is tripped. No electricity to the cooktop.	Replace the fuse or reset the circuit breaker. If the problem continues, call an electrician. Have electrician check your power supply.
Heating elements do not heat properly.	Improper cookware is being used.	Select proper cookware. See “Cookware.” If the problem continues, call for service.
Using advanced temperature control, our hobs are designed to hold a refined temperature by cycling on and off to ensure consistent heating temperature of the pan.	Heating element temperature controls cycle the elements to maintain the temperature while ensuring life of the elements.	This is a normal operating condition
Glass ceramic surface is see through or appears to be red in color.	Under direct or bright lighting, you will sometimes be able to see through the glass and into the chassis due to its transparent quality. You may also notice a red tint under these conditions.	These are normal properties of black ceramic glass panels.

Troubleshooting – Cooktop Error Codes

E1	Synchronization Loss	1. Power module PCB damaged, replace induction module.
E2	Input Voltage Overvoltage Protection	1. Check if power supply voltage is within normal range. 2. Power module PCB damaged, replace induction module.
E3	Input Voltage Undervoltage Protection	1. Check if power supply voltage is within normal range. 2. Power module PCB damaged, replace induction module.
E4	Pot Sensor Open Circuit	1. Check if coil sensor is properly connected. 2. Replace coil sensor. 3. Module damaged, replace induction module.
E5	Pot Sensor Short Circuit	1. Check if coil sensor is properly connected. 2. Replace coil sensor. 3. Module damaged, replace induction module.
E6	Pot Sensor Overheat	1. Wait for the plate to cool down for automatic recovery. 2. Replace coil sensor. 3. Module damaged, replace induction module.
E7	IGBT Sensor Open Circuit	1. Module damaged, replace induction module.
E8	IGBT Sensor Short Circuit	1. Module damaged, replace induction module.
E9	IGBT Sensor Overheat	1. Wait for components to cool down for automatic recovery. 2. Check if module cooling fan is working properly. 3. Replace induction module.
EE	Communication Fault	1. Check if communication cable is properly connected. 2. Replace communication cable. 3. Control board damaged, replace control board. 4. Module damaged, replace induction module.
Ed	Thermistor Failure	1. Module damaged, replace induction module.



Thank you for being part of the Induction Hardware community.

If you ever need support, our team is always here to help.

www.INDUCTIONHARDWARE.com