SHARP®

OPERATION MANUAL AND INSTALLATION INSTRUCTIONS

WALL-MOUNT CHIMNEY RANGE HOOD

MODELS: SHC2443SNS/ SHC3043SNS/ SHC3063SNS/
SHC3063KNS/ SHC3663SNS

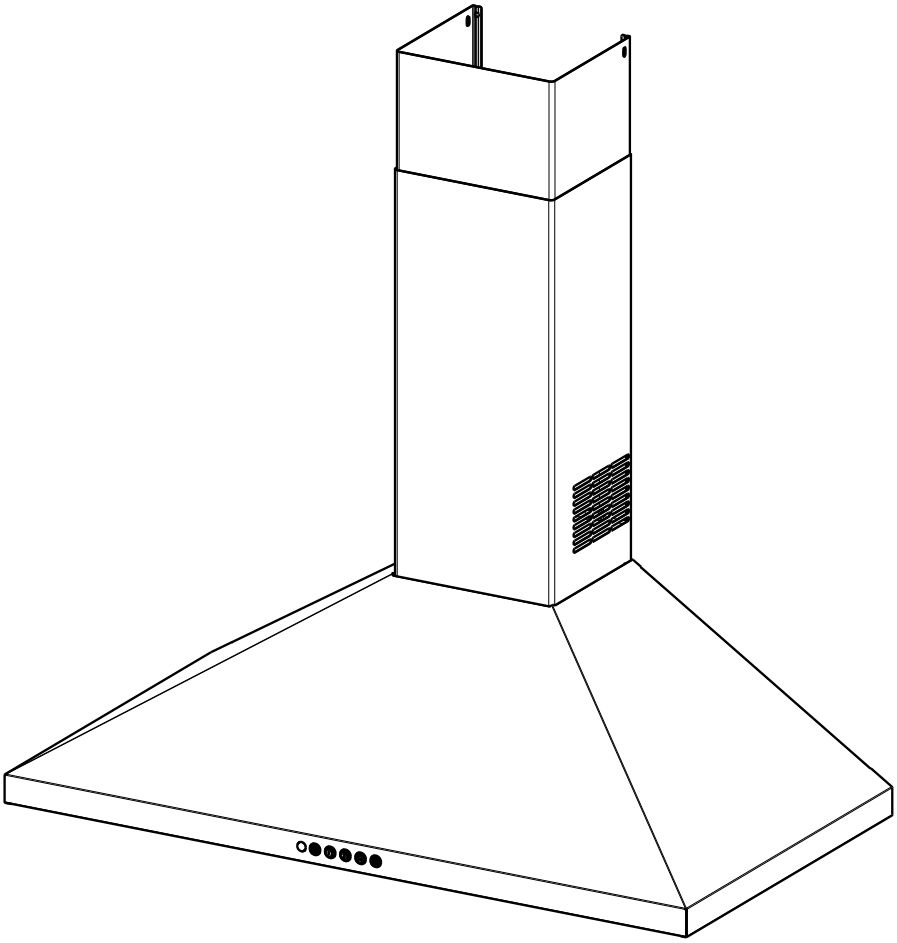

CUSTOMER ASSISTANCE 2

CONSUMER LIMITED WARRANTY 3

BEFORE INSTALLING THE RANGE HOOD 4-6

RANGE HOOD DIMENSIONS 7

RANGE HOOD MAIN PARTS 8-9

PRODUCT SPECIFICATIONS 10

MEASURE THE INSTALLATION 11

INSTALLATION INSTRUCTIONS 12-15

OPERATING THE CONTROLS 16-17

CLEANING & MAINTENANCE 18-19

Range Hood Models: SHC2443SNS/ SHC3043SNS/ SHC3063SNS/ SHC3063KNS/ SHC3663SNS

CUSTOMER ASSISTANCE

UNITED STATES ONLY

REGISTER YOUR PRODUCT

Registering your new product is easy and offers benefits that help you get the most out of your Sharp product including:

- ✓ **Convenience**: If you ever need warranty support, your product information is already on file.
- ✓ **Communication**: Stay up to date with important notifications and special offers from SHARP.
- ✓ **Support**: Quickly access support content including Owner's Manuals, FAQ's, How-to Videos, and much more.

3 EASY WAYS TO REGISTER TODAY!

SCAN

Use the camera or QR code scanning application on your smart phone

Scan this QR Code on your smart phone

ONLINE

Visit our sites to learn more about your product at sharpusa.com and sbl.sharpusa.com

Visit http://www.sharpusa.com/register

CALL US

US **800-BE-SHARP**
800-237-4277

Contact a Sharp Advisor on the phone

PRODUCT SUPPORT

If you have questions about the setup or operation of your product, please refer to the corresponding section within this manual.

Additionally, visit www.sharpusa.com/support to access exclusive content about your product including:

- → FAQ's and How-To Videos
- → Find or Request Service
- → Purchase an Extended Warranty
- → Downloads including the Installation Guide, Spec Sheet, and Owner's Manual

CONTACT US

If at any time you have questions or comments concerning your SHARP product, please contact the SHARP Customer Assistance Center. We are available to assist you through multiple contact methods for your convenience:

EMAIL
Available 24/7
US: sharpusa.com

See the Contact Us section on our sites

CHAT ONLINE

U.S. | www.sharpusa.com/support

CALL US

US **800-BE-SHARP**
800-237-4277

Contact a Sharp Advisor on the phone

SHARP®

CONSUMER LIMITED WARRANTY

SHARP ELECTRONICS CORPORATION warrants to the first consumer purchaser that this Sharp brand product (the "Product"), when shipped in its original container, will be free from defective workmanship and materials, and agrees that it will, at its option, either repair the defect or replace the defective Product or part thereof with a new or remanufactured equivalent at no charge to the purchaser for parts or labor for the period(s) set forth below.

This warranty does not apply to any cosmetic or appearance items of the Product nor to the additional excluded item(s) set forth below nor to any Product the exterior of which has been damaged or defaced, which has been subjected to misuse, abnormal service or handling, or which has been altered or modified in design or construction. In order to enforce the rights under this limited warranty, the purchaser should follow the steps set forth below and provide proof of purchase to the servicer.

The limited warranty described herein is in addition to whatever implied warranties may be granted to purchasers by law. ALL IMPLIED WARRANTIES INCLUDING THE WARRANTIES OF MERCHANTABILITY AND FITNESS FOR USE ARE LIMITED TO THE PERIOD(S) FROM THE DATE OF PURCHASE SET FORTH BELOW. Some states do not allow limitations on how long an implied warranty lasts, so the above limitation may not apply to you.

Neither the sales personnel of the seller nor any other person is authorized to make any warranties other than those described herein, or to extend the duration of any warranties beyond the time period described above on behalf of Sharp. The warranties described herein shall be the sole and exclusive warranties granted by Sharp and shall be the sole and exclusive remedy available to the purchaser. Correction of defects, in the manner and for the period of time described herein, shall constitute complete fulfillment of all liabilities and responsibilities of Sharp to the purchaser with respect to the Product, and shall constitute full satisfaction of all claims, whether based on contract, negligence, strict liability or otherwise. In no event shall Sharp be liable, or in any way responsible, for any damages or defects in the Product which were caused by repairs or attempted repairs performed by anyone other than an authorized servicer. Nor shall Sharp be liable or in any way responsible for any incident or consequential economic or property damage. Some states do not allow the exclusion of incidental or consequential damages, so the above exclusion may not apply to you.

THIS LIMITED WARRANTY IS VALID ONLY IN THE FIFTY (50) UNITED STATES, THE DISTRICT OF COLUMBIA AND PUERTO RICO.

Product model number & description:	SHC2443SNS, SHC3043SNS, SHC3063SNS, SHC3063KNS or SHC3663SNS Range Hood
Warranty period for this product:	One (1) year parts and labor, including in-home service.
Additional item(s) excluded from warranty coverage:	Commercial, non-residential, or use inconsistent with published installation and product operational instructions. Light bulbs and filters. In home instruction on how to use your product.
What to do to obtain service:	In-home service is provided for one year from date of purchase. Service can be arranged by calling 1-800-BE-SHARP. Be sure to have Proof of Purchase, Model, and Serial Number available.

TO OBTAIN SUPPLY, ACCESSORY OR PRODUCT INFORMATION, CALL 1-800-BE-SHARP or visit www.sharpusa.com.

SAVE THE PROOF OF PURCHASE AS IT IS NEEDED SHOULD YOUR RANGE HOOD EVER REQUIRE WARRANTY SERVICE.

BEFORE INSTALLING THE RANGE HOOD

READ AND SAVE THESE INSTRUCTIONS TO REDUCE THE RISK OF FIRE, ELECTRIC SHOCK, OR INJURY TO PERSON(S) OBSERVE THE FOLLOWING:

1. Use this unit only in the manner intended by the manufacturer. If you have questions, contact the manufacturer at the address or telephone number listed in the warranty.
2. Before servicing or cleaning unit, switch power off at service panel and lock service disconnecting means to prevent power from being switch on accidentally. When the service disconnecting means cannot be locked, securely fasten a prominent warning device, such as a tag, to the service panel.
3. Installation work and electrical wiring must be done by qualified personnel in accordance with all applicable codes and standards, including fire-rated construction codes and standards.
4. Sufficient air is needed for proper combustion and exhausting of gases through the flue (chimney) of fuel burning equipment to prevent backdrafting. Follow the heating equipment manufacturer's guidelines and safety standards such as those published by the National Fire Protection Association (NFPA), the American Society for Heating, Refrigeration and Air Conditioning Engineers (ASHRAE) and the local code authorities.
5. This product may have sharp edges. Be careful to avoid cuts and abrasions during installation or cleaning.
6. When cutting or drilling into wall or ceiling, do not damage electrical wiring and other hidden utilities.
7. Ducted fans used to exhaust contaminants must always be vented to the outdoors
8. Do not use this unit with any other solid-state speed control device.
9. Use only metal ductwork.
10. This unit must be grounded.

TO REDUCE THE RISK OF A RANGE TOP GREASE FIRE:

1. Never leave surface units unattended at high settings. Boilovers cause smoking and greasy spillovers that may ignite. Heat oils slowly on low or medium settings.
2. Always turn hood ON when cooking at high heat or when cooking flaming foods (i.e. Crêpes Suzette, Cherries Jubilee, Peppercorn Beef Flambé). (In USA only)
3. Clean ventilating fans frequently. Grease should not be allowed to accumulate on fan or filters.
4. Use proper pan size. Always use cookware appropriate for the size of the surface element.

⚠ WARNING TO REDUCE THE RISK OF INJURY TO PERSON(S) IN THE EVENT OF A RANGE TOP GREASE FIRE, OBSERVE THE FOLLOWING*:

1. SMOTHER FLAMES with a close-fitting lid, cookie sheet, or metal tray, then turn off the burner. BE CAREFUL TO PREVENT BURNS. IF THE FLAMES DO NOT GO OUT IMMEDIATELY, EVACUATE AND CALL THE FIRE DEPARTMENT.
2. NEVER PICK UP A FLAMING PAN – You may be burned.
3. DO NOT USE WATER, including wet dishcloths or towels – This could cause a violent steam explosion.
4. Use an extinguisher ONLY if:
   - **A** You know you have a Class ABC extinguisher and you know how to operate it.
   - **B** The fire is small and contained in the area where it started.
   - **C** The fire department has been called.
   - **D** You can fight the fire with your back to an exit.

*Based on "Kitchen Fire Safety Tips" published by NFPA.

⚠ CAUTION

1. For indoor non-commercial use only.
2. For general ventilating use only. Do not use to exhaust hazardous or explosive materials and vapors.
3. To avoid motor bearing damage and noisy and/or unbalanced impeller, keep drywall spray, construction dust, etc. off power unit.
4. Do not use over cooking equipment greater than 60,000 BTU/hr. as the blower motor will shut down intermittently.
5. Your hood motor has a thermal overload which will automatically shut off the motor if it becomes overheated. The motor will restart when it cools down. If the motor continues to shut off and restart, have the hood serviced.
6. The bottom of the hood MUST NOT BE LESS than 24" for ELECTRIC COOKTOP and 30" over GAS and recommend a maximum of 36" above cooktop for best capture of cooking impurities.
7. Two installers are recommended because of the size of this hood.
8. To reduce risk of fire and to properly exhaust air, be sure to duct air outside. Do not exhaust air into spaces within walls or ceilings or into attics, crawl spaces, or garages. Ducted fans used to exhaust contaminants must always be vented to the outdoors
9. Be careful when installing the decorative flue and hood, they may have sharp edges.
10. Accessible parts may become hot when used with cooking appliances.
11. This appliance is not intended for use by persons (including children) with reduced physical, sensory or mental capabilities, or lack of experience and knowledge, unless they have been given supervision or instruction concerning use of the appliance by a person responsible for their safety.

12 Children should be supervised to ensure that they do not play with the appliance.

13 There shall be adequate ventilation of the room when the range hood is used at the same time as appliances burning gas or other fuels (not applicable to appliances that only discharge the air back into the room).

14 Do not flame food under the range hood.

15 Always turn hood ON when cooking at high heat or when flambeing food (i.e. Crepes Suzette, Cherries Jubilee, Peppercorn Beef Flambe') (in USA only).

16 There is a fire risk if cleaning is not carried out in accordance with the instructions.

17 The air must not be discharged into a flue that is used for exhausting fumes from appliances burning gas or other fuels (not applicable to appliances that only discharge the air back into the room).

18 Regulations concerning the discharge of air have to be fulfilled.

19 Means for disconnection must be incorporated in the fixed wiring in accordance with the wiring rules.

20 The disconnection may be achieved by incorporating a switch in the fixed wiring in accordance with the wiring rules.

21 The disconnection may be achieved by having the plug accessible or by incorporating a switch in the fixed wiring in accordance with the wiring rules.

22 This appliance must be grounded. In the event of an electrical short circuit, grounding reduces the risk of electric shock by providing an escape wire for the electric current. If this appliance is equipped with a cord having a grounding wire with a grounding plug, the plug must be plugged into an outlet that is properly installed and grounded.

23 Please read specification label on product for further information and requirements.

⚠ WARNING Improper grounding can result in a risk of electric shock. Consult a qualified electrician if the grounding instructions are not completely understood, or if doubt exists as to whether the appliance is properly grounded.

⚠ WARNING To Reduce The Risk Of Fire, Electric Shock Or Injury To Persons, Do Not Use Replacement Parts That Have Not Been Recommended By The Manufacturer (e.g. Parts Made At Home Using A 3D Printer).

INSTALLER: LEAVE THIS GUIDE WITH THE HOMEOWNER.

HOMEOWNER: OPERATION AND MAINTENANCE INFORMATIONS ARE ON PAGES 16-19.

⚠ WARNING Cancer and Reproductive Harm - www.P65Warnings.ca.gov

ALL WALL AND FLOOR OPENINGS WHERE THE RANGE HOOD IS INSTALLED MUST BE SEALED.

This Range Hood requires at least 24" of clearance between the bottom of the Range Hood and the cooking surface or countertop. This hood has been approved by UL at this distance from the cooktop.
This minimum clearance may be higher depending on local building codes. For gas cooktops and combination ranges, a minimum of 30" is recommended and may be required. Overhead cabinets on both sides of this unit must be a minimum of 18" above the cooking surface or countertop. Consult the cooktop or range installation instructions given the manufacturer before making any cutouts.

MOBILE HOME INSTALLATION

The installation of this Range Hood must conform to the Manufactured Home Construction and Safety Standards, Title 24 CFR, Part 3280 (formerly Federal Standard for Mobile Home Construction and Safety, Title 24, HUD, Part 280). See Electrical Requirements.

VENTING REQUIREMENTS

Determine which venting method is best for your application. Ductwork can extend either through the wall or the roof. The length of the ductwork and the number of elbows should be kept to a minimum to provide efficient performance. The size of the ductwork should be uniform. Do not install two elbows together. Use duct tape to seal all joints in the ductwork system.
Use caulking to seal exterior wall or flooring opening around the cap.

Flexible ductwork is not recommended. Flexible ductwork creates back pressure and air turbulence that greatly reduces performance.
Make sure there is proper clearance within the wall or floor for exhaust duct before making cutouts. Do not cut a joist or stud unless absolutely necessary. If a joist or stud must be cut, then a supporting frame must be constructed.

COLD WEATHER INSTALLATIONS

An additional back draft damper should be installed to minimize backward cold air flow and a nonmetallic thermal break should be installed to minimize conduction of outside temperatures as part of the vent system. The damper should be on the cold air side of the thermal break. The break should be as close as possible to where the vent system enters the heated portion of the house.

⚠ WARNING

- Venting system MUST terminate outside the home.
- **DO NOT** terminate the ductwork in an attic or other enclosed space.
- **DO NOT** use 4" laundry-tape wall caps.
- Flexible-type ductwork is not recommended.
- **DO NOT** obstruct the flow of combustion and ventilation air.
- Failure to follow venting requirements may result in a fire.

BEFORE INSTALLING THE RANGE HOOD

ELECTRICAL REQUIREMENTS

A 120 volt, 60 Hz AC-only electrical supply is required on a separate 15 amp fused circuit. A time-delay fuse or circuit breaker is recommended. The fuse must be sized per local codes in accordance with the electrical rating of this unit as specified on the serial/rating plate located inside the unit near the field wiring compartment.

⚠ WARNING

- Electrical ground is required on this Range Hood.
- If cold water pipe is interrupted by plastic, nonmetallic gaskets or other materials, **DO NOT** use for grounding.
- **DO NOT** ground to a gas pipe.
- **DO NOT** have a fuse in the neutral or grounding circuit. A fuse in the neutral or grounding circuit could result in electrical shock.
- Check with a qualified electrician if you are in doubt as to whether the Range Hood is properly grounded.
- Failure to follow electrical requirements may result in severe consequences, including fatal electrocution, serious burns, and widespread property damage from fires.

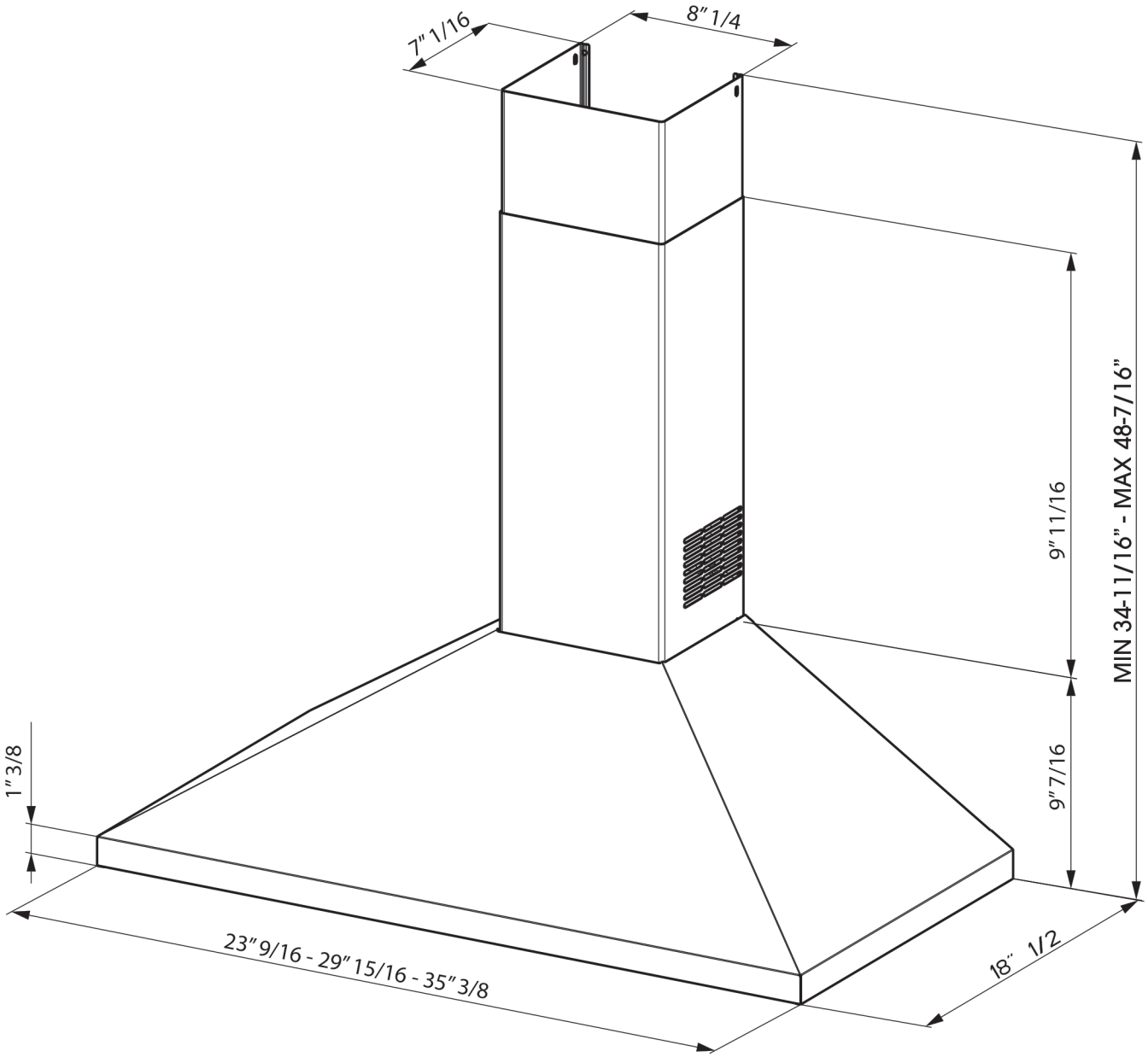
7" 1/16
8" 1/4
MIN 34-11/16" - MAX 48-7/16"
9" 11/16
9" 7/16
1" 3/8
23" 9/16 - 29" 15/16 - 35" 3/8
18" 1/2

RANGE HOOD MAIN PARTS

PARTS INCLUDED

REF.	PART	
A	Hood body - Includes Controls, Light, Filters, Blower	1
B	Metal Ring with Flaps	1
C	Lower Chimney	1
D	Upper Chimney	1
E	Chimney Wall Brackets	2

REF.	PART		
F	Pozi Screws (3/16” x 1 3/4”)		8
G	Pozi Screws (1/8” x 3/8”)		4

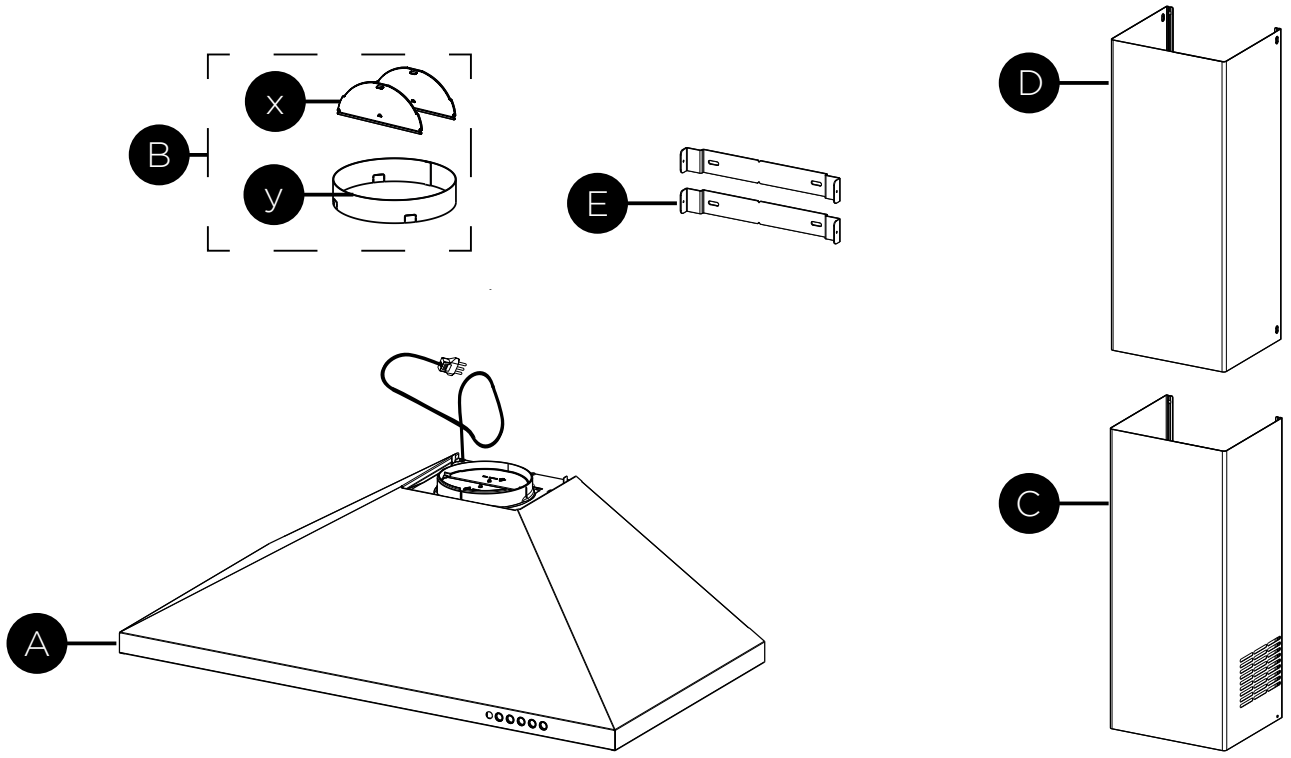

PARTS NEEDED

PART	
6” Round Metal Ductwork	
Drywall plugs or other suitable wall fasteners based on your installation.	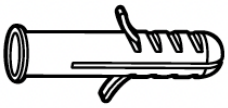
Wall Cap/Roof Cap Needs to be purchased separately.	

TOOLS NEEDED

TOOL	
Tape Measure	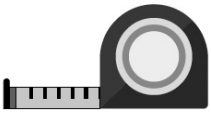
Pencil	
Electric Drill with 5/16” Drill Bit	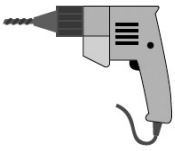
Pozi Screwdriver	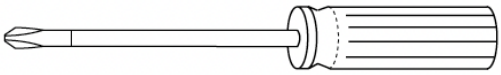
Work gloves	

PRODUCT SPECIFICATIONS

ITEM	MODELS				
	SHC2443SNS	SHC3043SNS	SHC3063SNS	SHC3063KNS	SHC3663SNS
Finish	Stainless Steel	Stainless Steel	Stainless Steel	Stainless Steel	Stainless Steel
Power Requirements	120V 60Hz	120V 60Hz	120V 60Hz	120V 60Hz	120V 60Hz
Dimensions					
Width	23-9/16”	29-15/16”	29-15/16”	29-15/16”	35-3/8”
Height Min.	34-11/16”	34-11/16”	34-11/16”	34-11/16”	34-11/16”
Max.	48-7/16”	48-7/16”	48-7/16”	48-7/16”	48-7/16”
Depth	18-1/2”	18-1/2”	18-1/2”	18-1/2”	18-1/2”
Control	Electronic	Electronic	Electronic with Backlight	Electronic with Backlight	Electronic with Backlight
Lamps	Round LED bulb GU10 x 2				
Blower Power	400 CFM	400 CFM	600 CFM	600 CFM	600 CFM
Speeds	3 Speeds + Boost	3 Speeds + Boost	3 Speeds + Boost	3 Speeds + Boost	3 Speeds + Boost
CFM Adjustability	N.A.		CFM Adjustable Platform (CAP)		
Delay Off	No	No	Yes	Yes	Yes
Safety Standard	UL	UL	UL	UL	UL

AVAILABLE ACCESSORIES

Accessories	Ductless Conversion Kit (incl. Charcoal Filters)	Charcoal Filter Replacement	Extension Flue	Remote Control Unit
Model Number	SKCH63DLK	SKCH63CFL	SKCH63EXF	SKCH63RHU
UPC Code	074000623156	074000623163	074000623170	074000623187
Product	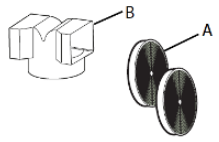	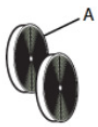	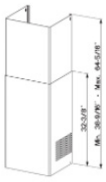	

MIN. 24″ OVER ELECTRIC / MIN. 30″ OVER GAS

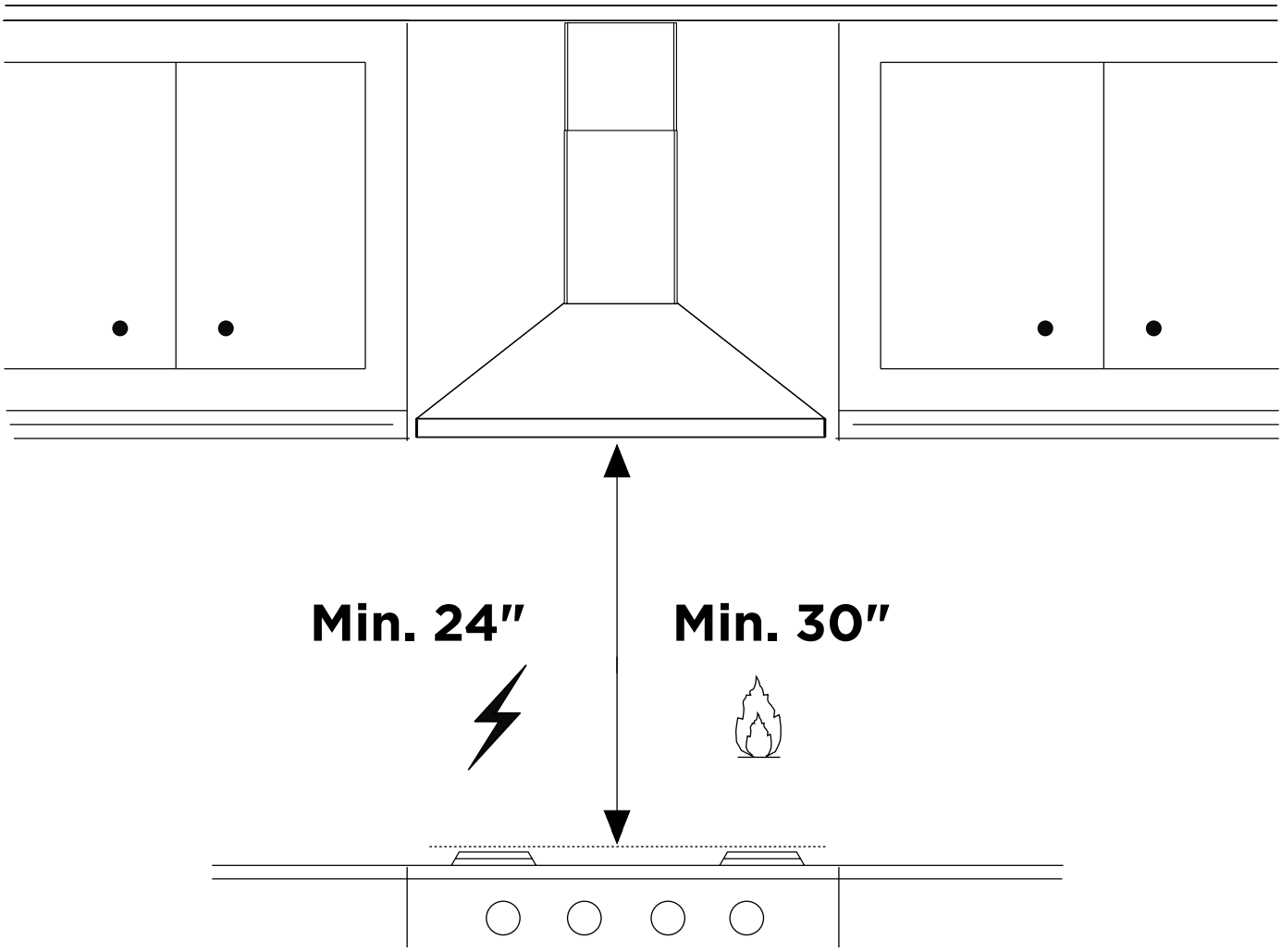

INSTALLATION INSTRUCTIONS

DUCTED WITH 6” ROUND OUTLET:

- Vertical
- Horizontal

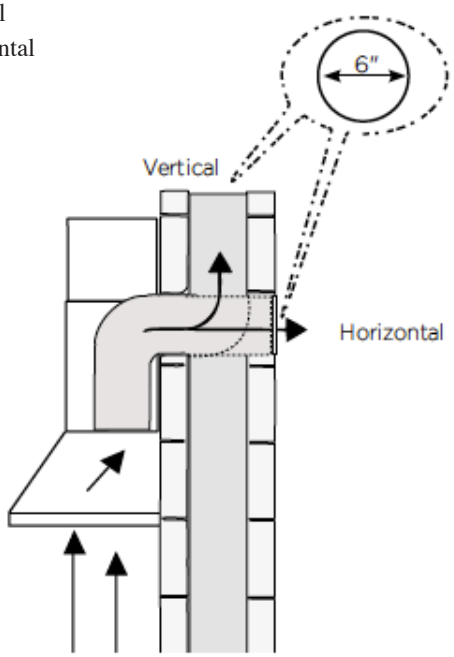

NON DUCTED - RECIRCULATION OPTION

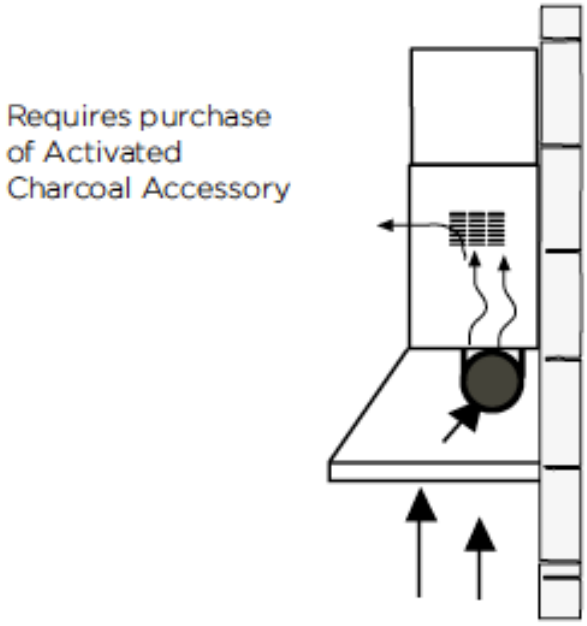

MOUNTING RANGE HOOD ON WALL

1 Draw a vertical line H from the supporting back wall to the ceiling or upper limit, at the center of the area in which the hood will be installed.

Draw a horizontal line I from where the bottom edge of the hood will be located, to a minimum of 24” above an electric cooking surface and 30” above a gas cooking surface.

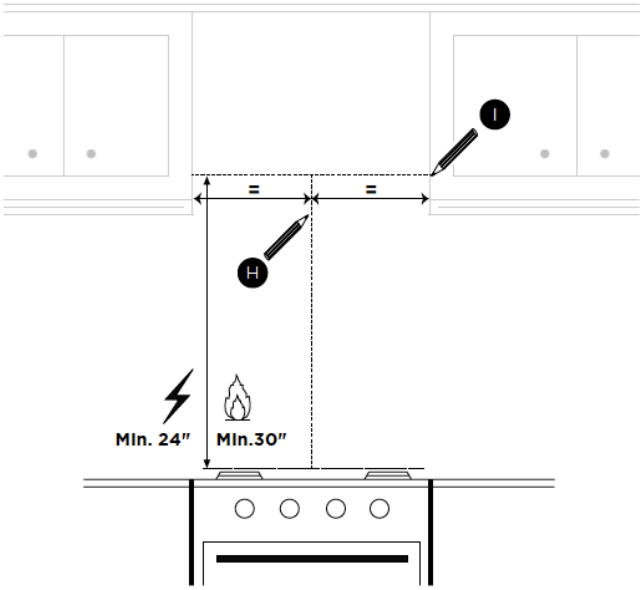

MIN. 24" OVER ELECTRIC/MIN. 30" OVER GAS

2 Draw a horizontal line where indicated at the bottom edge of the vent hood at the desired height above the cooking surface.

Place a bracket E on the wall as shown about 1/8” from the ceiling or upper limit, aligning the centers (notch) with the vertical reference line and mark the wall at the centers of the holes in the bracket.

Place the second bracket E on the wall as shown, below the first bracket, at the height of the upper chimney section D supplied and aligning the centers (notch) with the vertical line.

Mark the wall at the centers of the holes in the bracket and mark the point 1 and 2 for the Hood Body installation as shown (7 1/16” from the horizontal line and 4 15/16” from the vertical line).

Drill ø 5/16” holes at all the centers points marked (point 1,2,3,4,5,6) as shown.

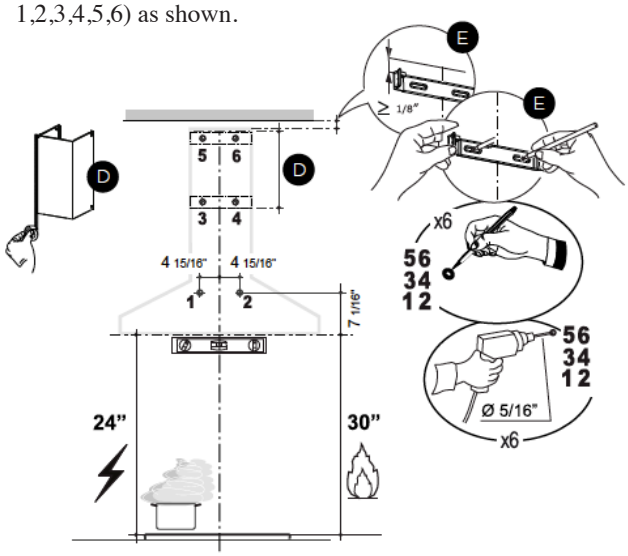

3 Install wall plugs if needed (purchase separately). Partially insert the two screws supplied F, into the wall as shown onto holes 1 and 2.

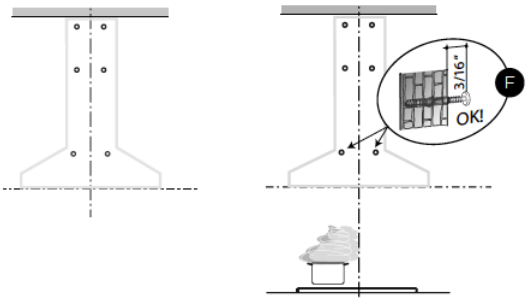

4 Hang the hood on the wall by pushing the screws through the 2 designated key holes on the back of the hood. Tighten the screv

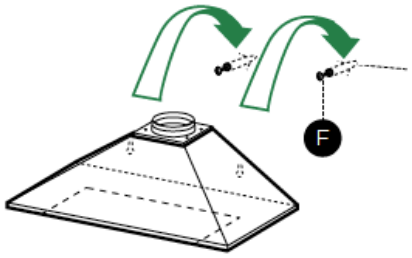

F	Pozi Screws (3/16" x 1 15/16")	
Pozi Screwdriver		

5 From inside the hood, mark the holes for the two security holes, drill a 5/16" x 2 where marked. Insert 2 wall plugs into the holes and tightly screw 2 screws F.

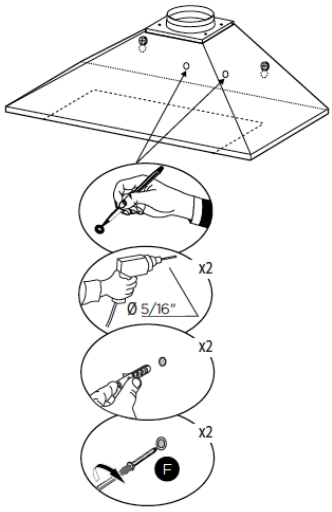

F	Pozi Screws (3/16" x 1 15/16")	
Pozi Screwdriver		

6 **Vertical or Horizontal Ducting Installation**
Install the 2 Damper Flaps x included with the Range Hood as shown. Break the 4 pre-cutting pieces and install the Ring y included with the Range Hood before connecting to the ductwork.

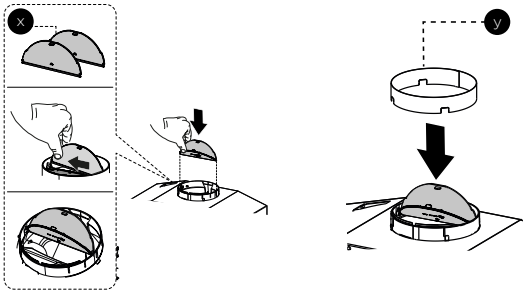

7 Attach the 2 chimney brackets E using 4 screws F supplied.

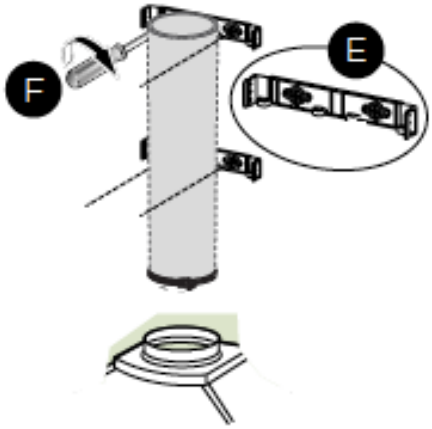

8 Slightly widen the two sides of the upper chimney D and hook them behind the brackets E making sure that they are well seated.

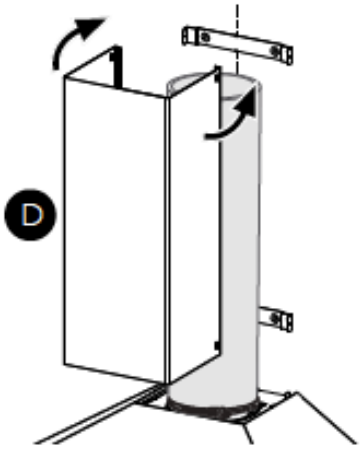

INSTALLATION INSTRUCTIONS

9 Secure the sides to the brackets E by using the 4 screws G.

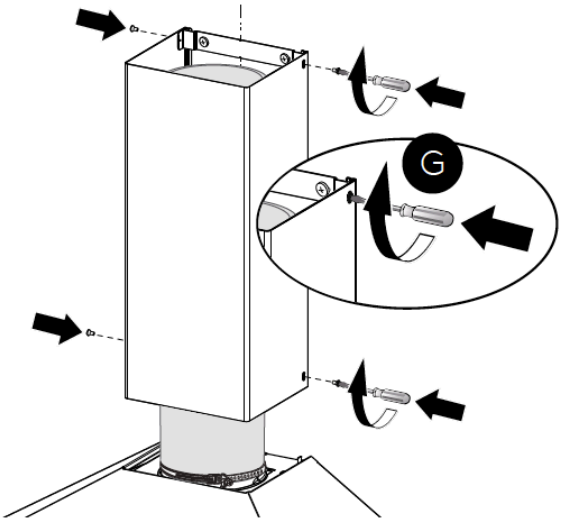

Pozi Screwdriver	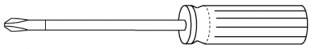

G	Pozi Screws (1/8” x 7/16”)	

10 Using a flathead screwdriver, lift up the tabs on the top of the Canopy.

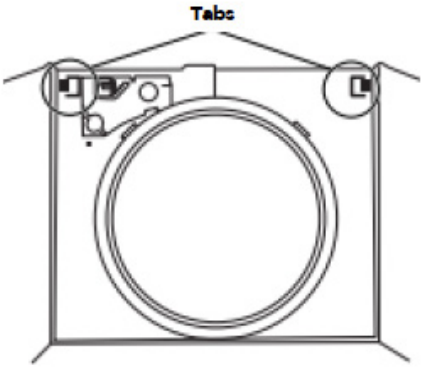

11 Slightly widen the two sides of the lower chimney hood C and hook them between the upper section and the wall, making sure that the are properly housed.

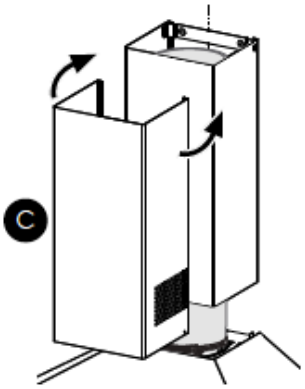

12 Install the lower chimney.

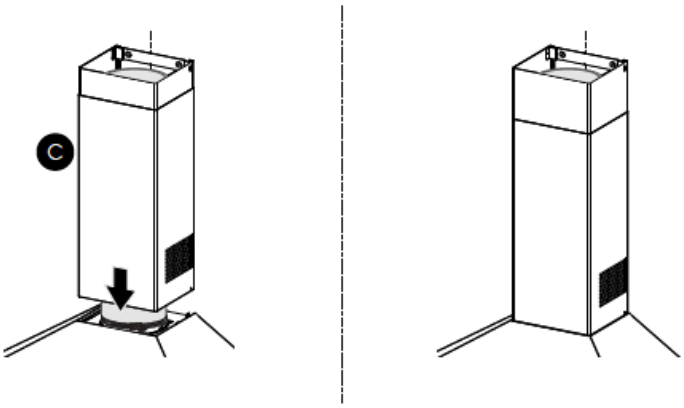

13 **Non-Ducted Recirculation Option**
Only for the recirculation version, connect the ductless diverter onto the top of the hood body (purchased separately).

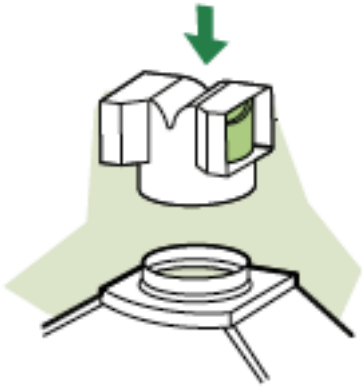

14 Attach each charcoal filter to the black grid on each side of the blower. Press the charcoal filter tightly to the black grid on the blower side and rotate the filter counterclockwise (towards the front of the hood) until it locks into place. Turn clockwise (towards the back of the hood) to remove.

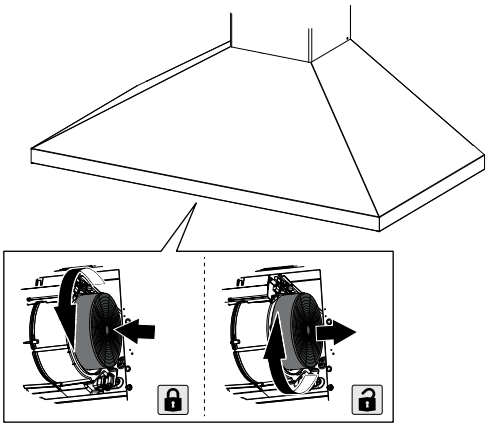

Required Activated Charcoal Filter Accessory
- sku # - SKCH63CFL

15 Electrical Installation With Connection Cable

GROUNDING INSTRUCTIONS This appliance must be grounded. In the event of an electrical short circuit, grounding reduces the risk of electric shock by providing an escape wire for the electric current. This appliance is equipped with a cord having a grounding wire with a grounding plug. The plug must be plugged into an outlet that is properly installed and grounded.

WARNING - Improper grounding can result in a risk of electric shock. Consult a qualified electrician if the grounding instructions are not completely understood, or if doubt exists as to whether the appliance is properly grounded. Do not use an extension cord. If the power supply cord is too short, have a qualified electrician install an outlet near the appliance.

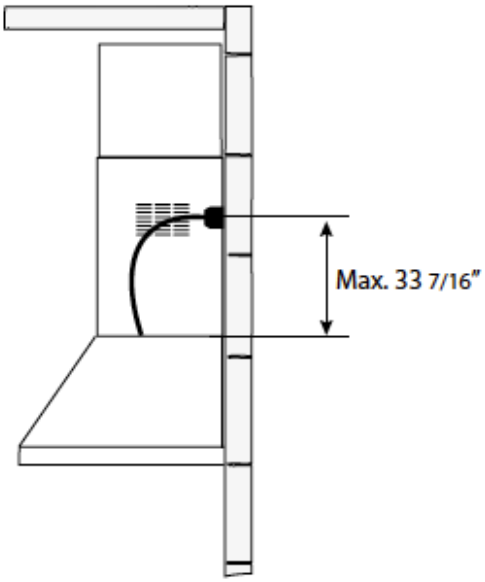

OPERATING THE CONTROLS

FOR BEST RESULTS

APPLICABLE FOR THE FOLLOWING MODELS: SHC3063SNS, SHC3063KNS, & SHC3663SNS

Start the Range Hood several minutes before cooking to develop proper airflow. Allow the Range Hood to operate for several minutes after cooking is complete to clear all smoke and odors from the kitchen.

Button	Function
⏻	Fan Off Button: Turn the blower OFF. The fan can be operated by pressing any of the fan setting buttons. Hold down this button for 2 seconds to activate delayed off function which will keep the fan On for 15 minutes and automatically shut Off.
1	Fan Setting Button: Low Speed.
2	Fan Setting Button: Medium Speed.
3/i	Fan Setting Button: High Speed. Hold down the button for 2 seconds to activate the INTENSIVE SPEED, which is timed to run for 10 minutes. At the end of this time it will automatically return to the speed set before. Suitable to deal with maximum levels of cooking fumes.
☼	Light Button: ON / OFF for the LED lights. Press the LIGHT button to turn the light ON, again to turn OFF.

NOTE: If your product has had a CFM adjustment, refer to the CFM adjustment manual for the information. Some motor speeds or functions may be reduced.

FOR BEST RESULTS

APPLICABLE FOR THE FOLLOWING MODELS: SHC2443SNS & SHC3043SNS

Start the Range Hood several minutes before cooking to develop proper airflow. Allow the Range Hood to operate for several minutes after cooking is complete to clear all smoke and odors from the kitchen.

⏻	2	3/i	☼

Button	Function
⏻	Turns the Motor ON at Speed one. Turn the blower OFF.
2	Turns the Motor ON at Speed two.
3/i	When pressed briefly, turns the Motor ON at Speed three. Pressed for 2 seconds. Activates Speed four with a timer set to 6 minutes, after which it returns to the speed that was set previously. Suitable to deal with maximum levels of cooking fumes.
☼	Turns the Lighting System ON and OFF.

NOTE: If your product has had a CFM adjustment, refer to the CFM adjustment manual for the information. Some motor speeds or functions may be reduced.

CLEANING & MAINTENANCE

CLEANING METAL GREASE FILTERS

The metal grease filters can be cleaned in hot detergent solution or washed in the dishwasher. They should be cleaned every 2 months use, or more frequently if use is particularly heavy.

1 Remove the filter, pushing the lever towards the back of the unit while pulling downward.

2 Wash the filter without bending it. Leave it to dry thoroughly before replacing. If the surface of the filter changes color over time, efficiency will not be affected.

3 To replace the filter, push the filter up into position while holding the lever back, then release lever to lock in place.

NOTES:

- Cleaning in a dishwasher may dull the finish of the metal grease filters.
- Ensure that the filters are completely dry before installing them back into the Range Hood.

CLEANING EXTERIOR SURFACES

Please note, abrasives and scouring agents can scratch range hood finishes and should not be used to clean finished surfaces.

Stainless Steel finish cleaning instructions:
Clean exterior surfaces with a commercially available stainless steel cleaner.

REPLACING ACTIVATED CHARCOAL FILTER

The Activated Charcoal Filters are not washable and cannot be regenerated, and must be replaced approximately every 4 months of operation, or more frequently with heavy usage.

1 Remove the grease filters.

2 Remove the saturated charcoal filter by rotating it clockwise (backwards) until it unlocks from the motor housing and pull off sideways.

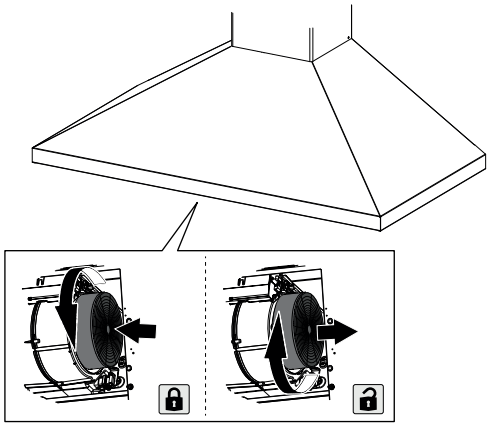

3 To re-insert each charcoal filter, place up against the side of the blower and push it inward. Then turn the charcoal filter counterclockwise (forward) until it fits into place.

REPLACING LIGHTING

- Remove the snap-on lamp cover by levering it from under the metal ring, supporting it with one hand.
- Replace the lamp with a new one of the same type, making sure that you insert the two pins properly into the housings on the lamp holder.
- Replace the snap-on lamp cover.

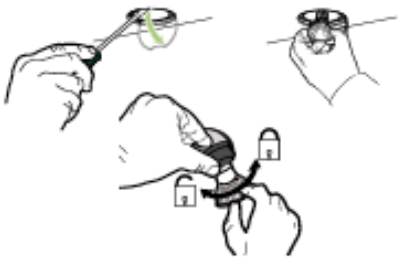

Gu10 self-ballasted led lamps – listed in accordance with ul 1993/nmx-j-578/1-ance/ csa c22.2 No. 1993

SHARP®

SHARP ELECTRONICS CORPORATION • 100 Paragon Drive • Montvale, New Jersey 07645 • USA
800-BE-SHARP (800-237-4277)

February 15, 2026