Canon

TS700 series

Online Manual

English

Contents

Using Online Manual. 9

Symbols Used in This Document. 10

Touch-enabled Device Users (Windows). 11

Trademarks and Licenses. 12

Basic Operation. 27

Printing Photos from a Computer. 28

Printing Photos from a Smartphone/Tablet. 34

Printing a Disc Label from a Computer. 38

Network. 45

Restrictions. 48

Network Connection Tips. 50

Default Network Settings. 51

Detect Same Printer Name. 53

Connects to Another Computer via LAN/Changes from USB to LAN Connection. 54

Printing Network Settings. 55

Reconfiguration Method of LAN Connection/Reconfiguration Method of Wi-Fi Connection. 61

IJ Network Device Setup Utility (Windows). 62

IJ Network Device Setup Utility. 63

Starting Up IJ Network Device Setup Utility. 64

Diagnosing and Repairing Network Settings. 65

Performing/Changing Network Settings. 66

Canon IJ Network Device Setup Utility Screen. 67

Performing Network Settings. 71

Performing/Changing Wired LAN Connection (Ethernet Cable) Settings. 72

Performing/Changing Wi-Fi Settings. 75

Assigning Printer Information. 80

List of Models Which Does Not Support Diagnosis and Repair Function. 81

List of Models Which Does Not Support IPv6 Configuration via USB Connection. 82

Handling Paper, Ink Tanks, Multi-purpose Tray, etc.. 84

Loading Paper. 85

Paper Sources. 86

Loading Paper in the Rear Tray. 87
Loading Paper in the Cassette. 92
Loading Envelopes in Rear Tray. 98
Placing Multi-purpose Tray. 103
Cautions When Printing with Multi-purpose Tray. 104
Placing a Printable Disc. 105
Before Placing a Printable Disc. 106
Placing a Printable Disc. 107
Removing a Printable Disc. 111
Placing Printable Nail Stickers. 113
Before Placing Printable Nail Stickers. 114
Placing Printable Nail Stickers. 115
Removing Printable Nail Stickers. 119
How to Detach / Attach Multi-purpose Tray. 121
Replacing Ink Tanks. 123
Replacing Ink Tanks. 124
Checking Ink Status on the LCD. 129
Ink Tips. 130
If Printing Is Faint or Uneven. 131
Maintenance Procedure. 132
Printing the Nozzle Check Pattern. 135
Examining the Nozzle Check Pattern. 136
Cleaning the Print Head. 137
Deep Print Head Cleaning. 138
Aligning the Print Head. 139
Cleaning. 140
Cleaning Paper Feed Rollers. 141
Cleaning Inside the Printer (Bottom Plate Cleaning). 142
Overview. 145
Safety. 146
Safety Precautions. 147
Regulatory Information. 150
WEEE (EU&EEA). 152

Handling Precautions. 163
Legal Restrictions on Printing. 164
Printer Handling Precautions. 165
Transporting Your Printer. 166
When Repairing, Lending, or Disposing of the Printer. 168
Keeping Print Quality High. 169
Main Components and Their Use. 170
Main Components. 171
Front View. 172
Rear View. 174
Inside View. 175
Operation Panel. 176
Power Supply. 177
Checking that Power Is On. 178
Turning the Printer On and Off. 179
Checking the Power Plug/Power Cord. 181
Unplugging the Printer. 182
LCD and Operation Panel. 183
Entering Numbers, Letters, and Symbols. 185
Changing Settings. 186
Changing Printer Settings from Your Computer (Windows). 187
Changing the Print Options. 188
Registering a Frequently Used Printing Profile. 189
Setting the Ink Tank to be Used. 191
Managing the Printer Power. 192
Changing the Printer Operation Mode. 194
Changing Settings from Operation Panel. 196
Changing Settings from Operation Panel. 197
Setting Items on Operation Panel. 198
Print settings. 199
LAN settings. 200
Other dev. settings. 204
Language selection. 205
Firmware update. 206
Reset setting. 207

Feed settings. 208
Web service setup. 209
ECO settings. 210
Quiet setting. 211
System information. 212
Specifications. 213
Information about Paper. 217
Supported Media Types. 218
Paper Load Limit. 221
Unsupported Media Types. 223
Handling Paper. 224
Printing. 225
Printing from Computer. 226
Printing from Application Software (Windows Printer Driver). 227
Basic Printing Setup. 228
Paper Settings on the Printer Driver and the Printer (Media Type). 232
Paper Settings on the Printer Driver and the Printer (Paper Size). 234
Various Printing Methods. 236
Setting a Page Size and Orientation. 237
Setting the Number of Copies and Printing Order. 238
Execute Borderless Printing. 240
Scaled Printing. 243
Page Layout Printing. 246
Tiling/Poster Printing. 248
Duplex Printing. 251
Setting Up Envelope Printing. 255
Printing on Postcards. 257
Overview of the Printer Driver. 259
Canon IJ Printer Driver. 260
Opening Printer Driver's Setup Screen. 261
Canon IJ Status Monitor. 262
Checking Ink Status from Your Computer. 264
Instructions for Use (Printer Driver). 265

Printer Driver Description. 267
Quick Setup Tab Description. 268
Main Tab Description. 275
Page Setup Tab Description. 279
Maintenance Tab Description. 291
Canon IJ Status Monitor Description. 293
Installing the Printer Driver. 296
Printing Using Canon Application Software. 297
Printing from Smartphone/Tablet. 298
Printing with Wireless Direct. 299
Paper Settings. 303
Frequently Asked Questions. 307
Network Settings and Common Problems. 309
Network Communication Problems. 312
Cannot Find Printer on Network. 313
Cannot Find Printer on Check Printer Settings Screen During Setup (Windows). 314
Cannot Find Printer on Check Printer Settings Screen During Wi-Fi Setup (Windows)-Checking Power Status. 316
Cannot Find Printer on Check Printer Settings Screen During Wi-Fi Setup (Windows)-Checking PC Network Connection. 317
Cannot Find Printer on Check Printer Settings Screen During Wi-Fi Setup (Windows)-Checking Printer's Wi-Fi Settings. 318
Cannot Find Printer on Check Printer Settings Screen During Wi-Fi Setup (Windows)-Checking Wi-Fi Environment. 319
Cannot Find Printer on Check Printer Settings Screen During Wi-Fi Setup (Windows)-Checking Printer's IP Address. 321
Cannot Find Printer on Check Printer Settings Screen During Wi-Fi Setup (Windows)-Checking Security Software Settings. 322
Cannot Find Printer on Check Printer Settings Screen During Wi-Fi Setup (Windows)-Checking Wireless Router Settings. 323
Cannot Find Printer on Check Printer Settings Screen During Wired LAN Setup (Windows)-Checking LAN Cable and Router. 324
Cannot Find Printer on Check Printer Settings Screen During Wired LAN Setup (Windows)-Checking PC Network Connection. 325
Cannot Find Printer on Check Printer Settings Screen During Wired LAN Setup (Windows)-Checking Printer's Wired LAN Settings. 326

Cannot Find Printer on Check Printer Settings Screen During Wired LAN Setup (Windows)-Checking Printer's IP Address. . . . 327
Cannot Find Printer on Check Printer Settings Screen During Wired LAN Setup (Windows)-Checking Security Software Settings. . . . 328
Cannot Find Printer on Check Printer Settings Screen During Wired LAN Setup (Windows)-Checking Router Settings. . . . 329
Cannot Proceed beyond Printer Connection Screen. . . . 330
Cannot Find Printer while Using Wi-Fi. . . . 332
Network Connection Problems. . . . 335
Printer Suddenly Stopped Working for Some Reason. . . . 336
Network Key (Password) Unknown. . . . 341
Printer Cannot Be Used After Replacing Wireless Router or Changed Router Settings. . . . 343
Other Network Problems. . . . 345
Checking Network Information. . . . 346
Restoring to Factory Defaults. . . . 349
Problems while Printing from Smartphone/Tablet. . . . 350
Cannot Print from Smartphone/Tablet. . . . 351
Printing Problems. . . . 355
Printer Does Not Print. . . . 356
Ink Does Not Come Out. . . . 359
Paper Does Not Feed Properly/"No Paper" Error. . . . 360
Cannot Print on the Disc Label. . . . 363
Printout Results Are Unsatisfactory. . . . 365
Printouts Are Blank/Blurry or Fuzzy/Inaccurate or Bleeding Colors/Streaks or Lines. . . . 367
Lines Are Misaligned/Distorted. . . . 370
Paper Is Smudged / Printed Surface Is Scratched. . . . 371
Vertical Line Next to Image. . . . 375
Mechanical Problems. . . . 376
Printer Does Not Turn On. . . . 377
Printer Turns Off Unexpectedly or Repeatedly. . . . 378
USB Connection Problems. . . . 379
Cannot Communicate with Printer via USB. . . . 380
Wrong Language Appears in LCD. . . . 381
Installation and Download Problems. . . . 382
Failed to Printer Driver Installation (Windows). . . . 383

Updating Printer Driver in Network Environment (Windows). 385
Errors and Messages. 386
Four-Digit Alphanumeric Characters Appear on LCD. 387
When Error Occurred. 388
Message (Support Code) Appears. 389
List of Support Code for Error. 392
List of Support Code for Error (Paper Jams). 394
1300. 395
1303. 397
1304. 398
1313. 399
Paper Is Jammed inside Printer. 400
Removing Jammed Paper from Rear Side. 403
1000. 406
1003. 407
1013. 408
1200. 409
1401. 410
1600. 411
1660. 412
1688. 413
1689. 414
1700. 415
1890. 416
2110. 417
2113. 419
2114. 421
4103. 423
5100. 424
5200. 425
5B00. 426
6000. 427
C000. 428

Using Online Manual

- Operating Environment
- Symbols Used in This Document
- Touch-enabled Device Users (Windows)
- Printing Online Manual
- Trademarks and Licenses
- Screenshots in This Manual

Symbols Used in This Document

Warning

Instructions that, if ignored, could result in death, serious personal injury, or property damage caused by incorrect operation of the equipment. These must be observed for safe operation.

Caution

Instructions that, if ignored, could result in personal injury or property damage caused by incorrect operation of the equipment. These must be observed for safe operation.

Important

Instructions including important information that must be observed to avoid damage and injury or improper use of the product. Be sure to read these instructions.

Note

Instructions including notes for operation and additional explanations.

Basics

Instructions explaining basic operations of your product.

Note

- Icons may vary depending on your product.

Touch-enabled Device Users (Windows)

For touch actions, you need to replace "right-click" in this document with the action set on the operating system. For example, if the action is set to "press and hold" on your operating system, replace "right-click" with "press and hold."

Trademarks and Licenses

- Microsoft is a registered trademark of Microsoft Corporation.
- Windows is a trademark or registered trademark of Microsoft Corporation in the U.S. and/or other countries.
- Windows Vista is a trademark or registered trademark of Microsoft Corporation in the U.S. and/or other countries.
- Internet Explorer is a trademark or registered trademark of Microsoft Corporation in the U.S. and/or other countries.
- Mac, Mac OS, macOS, OS X, AirPort, App Store, AirPrint, the AirPrint logo, Safari, Bonjour, iPad, iPhone and iPod touch are trademarks of Apple Inc., registered in the U.S. and other countries.
- IOS is a trademark or registered trademark of Cisco in the U.S. and other countries and is used under license.
- Google Cloud Print, Google Chrome, Chrome OS, Chromebook, Android, Google Drive, Google Apps and Google Analytics are either registered trademarks or trademarks of Google Inc. Google Play and Google Play Logo are trademarks of Google LLC.
- Adobe, Acrobat, Flash, Photoshop, Photoshop Elements, Lightroom, Adobe RGB and Adobe RGB (1998) are either registered trademarks or trademarks of Adobe Systems Incorporated in the United States and/or other countries.
- Bluetooth is a trademark of Bluetooth SIG, Inc., U.S.A. and licensed to Canon Inc.
- Autodesk and AutoCAD are registered trademarks or trademarks of Autodesk, Inc., and/or its subsidiaries and/or affiliates in the USA and/or other countries.
- USB Type-C™ is a trademark of USB Implementers Forum.

Note

- The formal name of Windows Vista is Microsoft Windows Vista operating system.

Copyright (c) 2003-2015 Apple Inc. All rights reserved.

Redistribution and use in source and binary forms, with or without modification, are permitted provided that the following conditions are met:

1. Redistributions of source code must retain the above copyright notice, this list of conditions and the following disclaimer.
2. Redistributions in binary form must reproduce the above copyright notice, this list of conditions and the following disclaimer in the documentation and/or other materials provided with the distribution.
3. Neither the name of Apple Inc. ("Apple") nor the names of its contributors may be used to endorse or promote products derived from this software without specific prior written permission.

THIS SOFTWARE IS PROVIDED BY APPLE AND ITS CONTRIBUTORS "AS IS" AND ANY EXPRESS OR IMPLIED WARRANTIES, INCLUDING, BUT NOT LIMITED TO, THE IMPLIED WARRANTIES OF MERCHANTABILITY AND FITNESS FOR A PARTICULAR PURPOSE ARE DISCLAIMED. IN NO EVENT SHALL APPLE OR ITS CONTRIBUTORS BE LIABLE FOR ANY DIRECT, INDIRECT, INCIDENTAL, SPECIAL, EXEMPLARY, OR CONSEQUENTIAL DAMAGES (INCLUDING, BUT NOT LIMITED TO, PROCUREMENT OF SUBSTITUTE GOODS OR SERVICES; LOSS OF USE, DATA, OR PROFITS; OR BUSINESS INTERRUPTION) HOWEVER CAUSED AND ON ANY THEORY OF LIABILITY, WHETHER IN CONTRACT, STRICT LIABILITY, OR TORT (INCLUDING NEGLIGENCE OR OTHERWISE) ARISING IN ANY WAY OUT OF THE USE OF THIS SOFTWARE, EVEN IF ADVISED OF THE POSSIBILITY OF SUCH DAMAGE.

Apache License

Version 2.0, January 2004

http://www.apache.org/licenses/

TERMS AND CONDITIONS FOR USE, REPRODUCTION, AND DISTRIBUTION

1. Definitions.

   "License" shall mean the terms and conditions for use, reproduction, and distribution as defined by Sections 1 through 9 of this document.

   "Licensor" shall mean the copyright owner or entity authorized by the copyright owner that is granting the License.

   "Legal Entity" shall mean the union of the acting entity and all other entities that control, are controlled by, or are under common control with that entity. For the purposes of this definition, "control" means (i) the power, direct or indirect, to cause the direction or management of such entity, whether by contract or otherwise, or (ii) ownership of fifty percent (50%) or more of the outstanding shares, or (iii) beneficial ownership of such entity.

   "You" (or "Your") shall mean an individual or Legal Entity exercising permissions granted by this License.

   "Source" form shall mean the preferred form for making modifications, including but not limited to software source code, documentation source, and configuration files.

   "Object" form shall mean any form resulting from mechanical transformation or translation of a Source form, including but not limited to compiled object code, generated documentation, and conversions to other media types.

   "Work" shall mean the work of authorship, whether in Source or Object form, made available under the License, as indicated by a copyright notice that is included in or attached to the work (an example is provided in the Appendix below).

   "Derivative Works" shall mean any work, whether in Source or Object form, that is based on (or derived from) the Work and for which the editorial revisions, annotations, elaborations, or other modifications represent, as a whole, an original work of authorship. For the purposes of this License, Derivative Works shall not include works that remain separable from, or merely link (or bind by name) to the interfaces of, the Work and Derivative Works thereof.

   "Contribution" shall mean any work of authorship, including the original version of the Work and any modifications or additions to that Work or Derivative Works thereof, that is intentionally submitted to Licensor for inclusion in the Work by the copyright owner or by an individual or Legal Entity authorized to submit on behalf of the copyright owner. For the purposes of this definition, "submitted" means any form of electronic, verbal, or written communication sent to the Licensor or its representatives, including but not limited to communication on electronic mailing lists, source code control systems, and issue tracking systems that are managed by, or on behalf of, the Licensor for the purpose of discussing and improving the Work, but excluding communication that is conspicuously marked or otherwise designated in writing by the copyright owner as "Not a Contribution."

   "Contributor" shall mean Licensor and any individual or Legal Entity on behalf of whom a Contribution has been received by Licensor and subsequently incorporated within the Work.

2. Grant of Copyright License. Subject to the terms and conditions of this License, each Contributor hereby grants to You a perpetual, worldwide, non-exclusive, no-charge, royalty-free, irrevocable copyright license to reproduce, prepare Derivative Works of, publicly display, publicly perform, sublicense, and distribute the Work and such Derivative Works in Source or Object form.
3. Grant of Patent License. Subject to the terms and conditions of this License, each Contributor hereby grants to You a perpetual, worldwide, non-exclusive, no-charge, royalty-free, irrevocable (except as stated in this section) patent license to make, have made, use, offer to sell, sell, import, and otherwise transfer the Work, where such license applies only to those patent claims licensable by such Contributor that are necessarily infringed by their Contribution(s) alone or by combination of their Contribution(s) with the Work to which such Contribution(s) was submitted. If You institute patent litigation against any entity (including a cross-claim or counterclaim in a lawsuit) alleging that the Work or a Contribution incorporated within the Work constitutes direct or contributory patent infringement, then any patent licenses granted to You under this License for that Work shall terminate as of the date such litigation is filed.
4. Redistribution. You may reproduce and distribute copies of the Work or Derivative Works thereof in any medium, with or without modifications, and in Source or Object form, provided that You meet the following conditions:

    1. You must give any other recipients of the Work or Derivative Works a copy of this License; and
    2. You must cause any modified files to carry prominent notices stating that You changed the files; and
    3. You must retain, in the Source form of any Derivative Works that You distribute, all copyright, patent, trademark, and attribution notices from the Source form of the Work, excluding those notices that do not pertain to any part of the Derivative Works; and
    4. If the Work includes a "NOTICE" text file as part of its distribution, then any Derivative Works that You distribute must include a readable copy of the attribution notices contained within such NOTICE file, excluding those notices that do not pertain to any part of the Derivative Works, in at least one of the following places: within a NOTICE text file distributed as part of the Derivative Works; within the Source form or documentation, if provided along with the Derivative Works; or, within a display generated by the Derivative Works, if and wherever such third-party notices normally appear. The contents of the NOTICE file are for informational purposes only and do not modify the License. You may add Your own attribution notices within Derivative Works that You distribute, alongside or as an addendum to the NOTICE text from the Work, provided that such additional attribution notices cannot be construed as modifying the License.

    You may add Your own copyright statement to Your modifications and may provide additional or different license terms and conditions for use, reproduction, or distribution of Your modifications, or for any such Derivative Works as a whole, provided Your use, reproduction, and distribution of the Work otherwise complies with the conditions stated in this License.

5. Submission of Contributions. Unless You explicitly state otherwise, any Contribution intentionally submitted for inclusion in the Work by You to the Licensor shall be under the terms and conditions of this License, without any additional terms or conditions. Notwithstanding the above, nothing herein shall supersede or modify the terms of any separate license agreement you may have executed with Licensor regarding such Contributions.
6. Trademarks. This License does not grant permission to use the trade names, trademarks, service marks, or product names of the Licensor, except as required for reasonable and customary use in describing the origin of the Work and reproducing the content of the NOTICE file.

7. Disclaimer of Warranty. Unless required by applicable law or agreed to in writing, Licensor provides the Work (and each Contributor provides its Contributions) on an "AS IS" BASIS, WITHOUT WARRANTIES OR CONDITIONS OF ANY KIND, either express or implied, including, without limitation, any warranties or conditions of TITLE, NON-INFRINGEMENT, MERCHANTABILITY, or FITNESS FOR A PARTICULAR PURPOSE. You are solely responsible for determining the appropriateness of using or redistributing the Work and assume any risks associated with Your exercise of permissions under this License.
8. Limitation of Liability. In no event and under no legal theory, whether in tort (including negligence), contract, or otherwise, unless required by applicable law (such as deliberate and grossly negligent acts) or agreed to in writing, shall any Contributor be liable to You for damages, including any direct, indirect, special, incidental, or consequential damages of any character arising as a result of this License or out of the use or inability to use the Work (including but not limited to damages for loss of goodwill, work stoppage, computer failure or malfunction, or any and all other commercial damages or losses), even if such Contributor has been advised of the possibility of such damages.
9. Accepting Warranty or Additional Liability. While redistributing the Work or Derivative Works thereof, You may choose to offer, and charge a fee for, acceptance of support, warranty, indemnity, or other liability obligations and/or rights consistent with this License. However, in accepting such obligations, You may act only on Your own behalf and on Your sole responsibility, not on behalf of any other Contributor, and only if You agree to indemnify, defend, and hold each Contributor harmless for any liability incurred by, or claims asserted against, such Contributor by reason of your accepting any such warranty or additional liability.
END OF TERMS AND CONDITIONS

---- Part 1: CMU/UCD copyright notice: (BSD like) -----

Copyright 1989, 1991, 1992 by Carnegie Mellon University

Derivative Work - 1996, 1998-2000

Copyright 1996, 1998-2000 The Regents of the University of California

All Rights Reserved

Permission to use, copy, modify and distribute this software and its documentation for any purpose and without fee is hereby granted, provided that the above copyright notice appears in all copies and that both that copyright notice and this permission notice appear in supporting documentation, and that the name of CMU and The Regents of the University of California not be used in advertising or publicity pertaining to distribution of the software without specific written permission.

CMU AND THE REGENTS OF THE UNIVERSITY OF CALIFORNIA DISCLAIM ALL WARRANTIES WITH REGARD TO THIS SOFTWARE, INCLUDING ALL IMPLIED WARRANTIES OF MERCHANTABILITY AND FITNESS. IN NO EVENT SHALL CMU OR THE REGENTS OF THE UNIVERSITY OF CALIFORNIA BE LIABLE FOR ANY SPECIAL, INDIRECT OR CONSEQUENTIAL DAMAGES OR ANY DAMAGES WHATSOEVER RESULTING FROM THE LOSS OF USE, DATA OR PROFITS, WHETHER IN AN ACTION OF CONTRACT, NEGLIGENCE OR OTHER TORTIOUS ACTION, ARISING OUT OF OR IN CONNECTION WITH THE USE OR PERFORMANCE OF THIS SOFTWARE.

---- Part 2: Networks Associates Technology, Inc copyright notice (BSD) -----

Copyright (c) 2001-2003, Networks Associates Technology, Inc

All rights reserved.

Redistribution and use in source and binary forms, with or without modification, are permitted provided that the following conditions are met:

* Redistributions of source code must retain the above copyright notice, this list of conditions and the following disclaimer.
* Redistributions in binary form must reproduce the above copyright notice, this list of conditions and the following disclaimer in the documentation and/or other materials provided with the distribution.
* Neither the name of the Networks Associates Technology, Inc nor the names of its contributors may be used to endorse or promote products derived from this software without specific prior written permission.

THIS SOFTWARE IS PROVIDED BY THE COPYRIGHT HOLDERS AND CONTRIBUTORS ``AS IS'' AND ANY EXPRESS OR IMPLIED WARRANTIES, INCLUDING, BUT NOT LIMITED TO, THE IMPLIED WARRANTIES OF MERCHANTABILITY AND FITNESS FOR A PARTICULAR PURPOSE ARE DISCLAIMED. IN NO EVENT SHALL THE COPYRIGHT HOLDERS OR CONTRIBUTORS BE LIABLE FOR ANY DIRECT, INDIRECT, INCIDENTAL, SPECIAL, EXEMPLARY, OR CONSEQUENTIAL DAMAGES (INCLUDING, BUT NOT LIMITED TO, PROCUREMENT OF SUBSTITUTE GOODS OR SERVICES; LOSS OF USE, DATA, OR PROFITS; OR BUSINESS INTERRUPTION) HOWEVER CAUSED AND ON ANY THEORY OF LIABILITY, WHETHER IN CONTRACT, STRICT LIABILITY, OR TORT (INCLUDING NEGLIGENCE OR OTHERWISE) ARISING IN ANY WAY OUT OF THE USE OF THIS SOFTWARE, EVEN IF ADVISED OF THE POSSIBILITY OF SUCH DAMAGE.

---- Part 3: Cambridge Broadband Ltd. copyright notice (BSD) -----

Portions of this code are copyright (c) 2001-2003, Cambridge Broadband Ltd.

All rights reserved.

Redistribution and use in source and binary forms, with or without modification, are permitted provided that the following conditions are met:

* Redistributions of source code must retain the above copyright notice, this list of conditions and the following disclaimer.
* Redistributions in binary form must reproduce the above copyright notice, this list of conditions and the following disclaimer in the documentation and/or other materials provided with the distribution.
* The name of Cambridge Broadband Ltd. may not be used to endorse or promote products derived from this software without specific prior written permission.

THIS SOFTWARE IS PROVIDED BY THE COPYRIGHT HOLDER ``AS IS'' AND ANY EXPRESS OR IMPLIED WARRANTIES, INCLUDING, BUT NOT LIMITED TO, THE IMPLIED WARRANTIES OF MERCHANTABILITY AND FITNESS FOR A PARTICULAR PURPOSE ARE DISCLAIMED. IN NO EVENT SHALL THE COPYRIGHT HOLDER BE LIABLE FOR ANY DIRECT, INDIRECT, INCIDENTAL, SPECIAL, EXEMPLARY, OR CONSEQUENTIAL DAMAGES (INCLUDING, BUT NOT LIMITED TO, PROCUREMENT OF SUBSTITUTE GOODS OR SERVICES; LOSS OF USE, DATA, OR PROFITS; OR BUSINESS INTERRUPTION) HOWEVER CAUSED AND ON ANY THEORY OF LIABILITY, WHETHER IN CONTRACT, STRICT LIABILITY, OR TORT (INCLUDING NEGLIGENCE OR OTHERWISE) ARISING IN ANY WAY OUT OF THE USE OF THIS SOFTWARE, EVEN IF ADVISED OF THE POSSIBILITY OF SUCH DAMAGE.

---- Part 4: Sun Microsystems, Inc. copyright notice (BSD) -----

Copyright c 2003 Sun Microsystems, Inc., 4150 Network Circle, Santa Clara, California 95054, U.S.A. All rights reserved.

Use is subject to license terms below.

This distribution may include materials developed by third parties.

Sun, Sun Microsystems, the Sun logo and Solaris are trademarks or registered trademarks of Sun Microsystems, Inc. in the U.S. and other countries.

Redistribution and use in source and binary forms, with or without modification, are permitted provided that the following conditions are met:

* Redistributions of source code must retain the above copyright notice, this list of conditions and the following disclaimer.
* Redistributions in binary form must reproduce the above copyright notice, this list of conditions and the following disclaimer in the documentation and/or other materials provided with the distribution.
* Neither the name of the Sun Microsystems, Inc. nor the names of its contributors may be used to endorse or promote products derived from this software without specific prior written permission.

THIS SOFTWARE IS PROVIDED BY THE COPYRIGHT HOLDERS AND CONTRIBUTORS ``AS IS'' AND ANY EXPRESS OR IMPLIED WARRANTIES, INCLUDING, BUT NOT LIMITED TO, THE IMPLIED WARRANTIES OF MERCHANTABILITY AND FITNESS FOR A PARTICULAR PURPOSE ARE DISCLAIMED. IN NO EVENT SHALL THE COPYRIGHT HOLDERS OR CONTRIBUTORS BE LIABLE FOR ANY DIRECT, INDIRECT, INCIDENTAL, SPECIAL, EXEMPLARY, OR CONSEQUENTIAL DAMAGES (INCLUDING, BUT NOT LIMITED TO, PROCUREMENT OF SUBSTITUTE GOODS OR SERVICES; LOSS OF USE, DATA, OR PROFITS; OR BUSINESS INTERRUPTION) HOWEVER CAUSED AND ON ANY THEORY OF LIABILITY, WHETHER IN CONTRACT, STRICT LIABILITY, OR TORT (INCLUDING NEGLIGENCE OR OTHERWISE) ARISING IN ANY WAY OUT OF THE USE OF THIS SOFTWARE, EVEN IF ADVISED OF THE POSSIBILITY OF SUCH DAMAGE.

---- Part 5: Sparta, Inc copyright notice (BSD) -----

Copyright (c) 2003-2012, Sparta, Inc

All rights reserved.

Redistribution and use in source and binary forms, with or without modification, are permitted provided that the following conditions are met:

* Redistributions of source code must retain the above copyright notice, this list of conditions and the following disclaimer.
* Redistributions in binary form must reproduce the above copyright notice, this list of conditions and the following disclaimer in the documentation and/or other materials provided with the distribution.
* Neither the name of Sparta, Inc nor the names of its contributors may be used to endorse or promote products derived from this software without specific prior written permission.

THIS SOFTWARE IS PROVIDED BY THE COPYRIGHT HOLDERS AND CONTRIBUTORS ``AS IS'' AND ANY EXPRESS OR IMPLIED WARRANTIES, INCLUDING, BUT NOT LIMITED TO, THE IMPLIED WARRANTIES OF MERCHANTABILITY AND FITNESS FOR A PARTICULAR PURPOSE ARE DISCLAIMED. IN NO EVENT SHALL THE COPYRIGHT HOLDERS OR CONTRIBUTORS BE LIABLE FOR ANY DIRECT, INDIRECT, INCIDENTAL, SPECIAL, EXEMPLARY, OR CONSEQUENTIAL DAMAGES (INCLUDING, BUT NOT LIMITED TO, PROCUREMENT OF SUBSTITUTE GOODS OR SERVICES; LOSS OF USE, DATA, OR PROFITS; OR BUSINESS INTERRUPTION) HOWEVER CAUSED AND ON ANY THEORY OF LIABILITY, WHETHER IN CONTRACT, STRICT LIABILITY, OR

TORT (INCLUDING NEGLIGENCE OR OTHERWISE) ARISING IN ANY WAY OUT OF THE USE OF THIS SOFTWARE, EVEN IF ADVISED OF THE POSSIBILITY OF SUCH DAMAGE.

---- Part 6: Cisco/BUPTNIC copyright notice (BSD) -----

Copyright (c) 2004, Cisco, Inc and Information Network Center of Beijing University of Posts and Telecommunications.

All rights reserved.

Redistribution and use in source and binary forms, with or without modification, are permitted provided that the following conditions are met:

* Redistributions of source code must retain the above copyright notice, this list of conditions and the following disclaimer.
* Redistributions in binary form must reproduce the above copyright notice, this list of conditions and the following disclaimer in the documentation and/or other materials provided with the distribution.
* Neither the name of Cisco, Inc, Beijing University of Posts and Telecommunications, nor the names of their contributors may be used to endorse or promote products derived from this software without specific prior written permission.

THIS SOFTWARE IS PROVIDED BY THE COPYRIGHT HOLDERS AND CONTRIBUTORS ``AS IS'' AND ANY EXPRESS OR IMPLIED WARRANTIES, INCLUDING, BUT NOT LIMITED TO, THE IMPLIED WARRANTIES OF MERCHANTABILITY AND FITNESS FOR A PARTICULAR PURPOSE ARE DISCLAIMED. IN NO EVENT SHALL THE COPYRIGHT HOLDERS OR CONTRIBUTORS BE LIABLE FOR ANY DIRECT, INDIRECT, INCIDENTAL, SPECIAL, EXEMPLARY, OR CONSEQUENTIAL DAMAGES (INCLUDING, BUT NOT LIMITED TO, PROCUREMENT OF SUBSTITUTE GOODS OR SERVICES; LOSS OF USE, DATA, OR PROFITS; OR BUSINESS INTERRUPTION) HOWEVER CAUSED AND ON ANY THEORY OF LIABILITY, WHETHER IN CONTRACT, STRICT LIABILITY, OR TORT (INCLUDING NEGLIGENCE OR OTHERWISE) ARISING IN ANY WAY OUT OF THE USE OF THIS SOFTWARE, EVEN IF ADVISED OF THE POSSIBILITY OF SUCH DAMAGE.

---- Part 7: Fabasoft R&D Software GmbH & Co KG copyright notice (BSD) -----

Copyright (c) Fabasoft R&D Software GmbH & Co KG, 2003 oss@fabasoft.com

Author: Bernhard Penz <bernhard.penz@fabasoft.com>

Redistribution and use in source and binary forms, with or without modification, are permitted provided that the following conditions are met:

* Redistributions of source code must retain the above copyright notice, this list of conditions and the following disclaimer.
* Redistributions in binary form must reproduce the above copyright notice, this list of conditions and the following disclaimer in the documentation and/or other materials provided with the distribution.
* The name of Fabasoft R&D Software GmbH & Co KG or any of its subsidiaries, brand or product names may not be used to endorse or promote products derived from this software without specific prior written permission.

THIS SOFTWARE IS PROVIDED BY THE COPYRIGHT HOLDER ``AS IS'' AND ANY EXPRESS OR IMPLIED WARRANTIES, INCLUDING, BUT NOT LIMITED TO, THE IMPLIED WARRANTIES OF MERCHANTABILITY AND FITNESS FOR A PARTICULAR PURPOSE ARE DISCLAIMED. IN NO EVENT SHALL THE COPYRIGHT HOLDER BE LIABLE FOR ANY DIRECT, INDIRECT, INCIDENTAL,

SPECIAL, EXEMPLARY, OR CONSEQUENTIAL DAMAGES (INCLUDING, BUT NOT LIMITED TO, PROCUREMENT OF SUBSTITUTE GOODS OR SERVICES; LOSS OF USE, DATA, OR PROFITS; OR BUSINESS INTERRUPTION) HOWEVER CAUSED AND ON ANY THEORY OF LIABILITY, WHETHER IN CONTRACT, STRICT LIABILITY, OR TORT (INCLUDING NEGLIGENCE OR OTHERWISE) ARISING IN ANY WAY OUT OF THE USE OF THIS SOFTWARE, EVEN IF ADVISED OF THE POSSIBILITY OF SUCH DAMAGE.

---- Part 8: Apple Inc. copyright notice (BSD) -----

Copyright (c) 2007 Apple Inc. All rights reserved.

Redistribution and use in source and binary forms, with or without modification, are permitted provided that the following conditions are met:

1. Redistributions of source code must retain the above copyright notice, this list of conditions and the following disclaimer.
2. Redistributions in binary form must reproduce the above copyright notice, this list of conditions and the following disclaimer in the documentation and/or other materials provided with the distribution.
3. Neither the name of Apple Inc. ("Apple") nor the names of its contributors may be used to endorse or promote products derived from this software without specific prior written permission.

THIS SOFTWARE IS PROVIDED BY APPLE AND ITS CONTRIBUTORS "AS IS" AND ANY EXPRESS OR IMPLIED WARRANTIES, INCLUDING, BUT NOT LIMITED TO, THE IMPLIED WARRANTIES OF MERCHANTABILITY AND FITNESS FOR A PARTICULAR PURPOSE ARE DISCLAIMED. IN NO EVENT SHALL APPLE OR ITS CONTRIBUTORS BE LIABLE FOR ANY DIRECT, INDIRECT, INCIDENTAL, SPECIAL, EXEMPLARY, OR CONSEQUENTIAL DAMAGES (INCLUDING, BUT NOT LIMITED TO, PROCUREMENT OF SUBSTITUTE GOODS OR SERVICES; LOSS OF USE, DATA, OR PROFITS; OR BUSINESS INTERRUPTION) HOWEVER CAUSED AND ON ANY THEORY OF LIABILITY, WHETHER IN CONTRACT, STRICT LIABILITY, OR TORT (INCLUDING NEGLIGENCE OR OTHERWISE) ARISING IN ANY WAY OUT OF THE USE OF THIS SOFTWARE, EVEN IF ADVISED OF THE POSSIBILITY OF SUCH DAMAGE.

---- Part 9: ScienceLogic, LLC copyright notice (BSD) -----

Copyright (c) 2009, ScienceLogic, LLC

All rights reserved.

Redistribution and use in source and binary forms, with or without modification, are permitted provided that the following conditions are met:

* Redistributions of source code must retain the above copyright notice, this list of conditions and the following disclaimer.
* Redistributions in binary form must reproduce the above copyright notice, this list of conditions and the following disclaimer in the documentation and/or other materials provided with the distribution.
* Neither the name of ScienceLogic, LLC nor the names of its contributors may be used to endorse or promote products derived from this software without specific prior written permission.

THIS SOFTWARE IS PROVIDED BY THE COPYRIGHT HOLDERS AND CONTRIBUTORS "AS IS" AND ANY EXPRESS OR IMPLIED WARRANTIES, INCLUDING, BUT NOT LIMITED TO, THE IMPLIED WARRANTIES OF MERCHANTABILITY AND FITNESS FOR A PARTICULAR PURPOSE ARE DISCLAIMED. IN NO EVENT SHALL THE COPYRIGHT HOLDERS OR CONTRIBUTORS BE LIABLE

FOR ANY DIRECT, INDIRECT, INCIDENTAL, SPECIAL, EXEMPLARY, OR CONSEQUENTIAL DAMAGES (INCLUDING, BUT NOT LIMITED TO, PROCUREMENT OF SUBSTITUTE GOODS OR SERVICES; LOSS OF USE, DATA, OR PROFITS; OR BUSINESS INTERRUPTION) HOWEVER CAUSED AND ON ANY THEORY OF LIABILITY, WHETHER IN CONTRACT, STRICT LIABILITY, OR TORT (INCLUDING NEGLIGENCE OR OTHERWISE) ARISING IN ANY WAY OUT OF THE USE OF THIS SOFTWARE, EVEN IF ADVISED OF THE POSSIBILITY OF SUCH DAMAGE.

LEADTOOLS

Copyright (C) 1991-2009 LEAD Technologies, Inc.

CMap Resources

Copyright 1990-2009 Adobe Systems Incorporated.
All rights reserved.

Copyright 1990-2010 Adobe Systems Incorporated.
All rights reserved.

Redistribution and use in source and binary forms, with or without modification, are permitted provided that the following conditions are met:

Redistributions of source code must retain the above copyright notice, this list of conditions and the following disclaimer.

Redistributions in binary form must reproduce the above copyright notice, this list of conditions and the following disclaimer in the documentation and/or other materials provided with the distribution.

Neither the name of Adobe Systems Incorporated nor the names of its contributors may be used to endorse or promote products derived from this software without specific prior written permission.

THIS SOFTWARE IS PROVIDED BY THE COPYRIGHT HOLDERS AND CONTRIBUTORS "AS IS" AND ANY EXPRESS OR IMPLIED WARRANTIES, INCLUDING, BUT NOT LIMITED TO, THE IMPLIED WARRANTIES OF MERCHANTABILITY AND FITNESS FOR A PARTICULAR PURPOSE ARE DISCLAIMED. IN NO EVENT SHALL THE COPYRIGHT HOLDER OR CONTRIBUTORS BE LIABLE FOR ANY DIRECT, INDIRECT, INCIDENTAL, SPECIAL, EXEMPLARY, OR CONSEQUENTIAL DAMAGES (INCLUDING, BUT NOT LIMITED TO, PROCUREMENT OF SUBSTITUTE GOODS OR SERVICES; LOSS OF USE, DATA, OR PROFITS; OR BUSINESS INTERRUPTION) HOWEVER CAUSED AND ON ANY THEORY OF LIABILITY, WHETHER IN CONTRACT, STRICT LIABILITY, OR TORT (INCLUDING NEGLIGENCE OR OTHERWISE) ARISING IN ANY WAY OUT OF THE USE OF THIS SOFTWARE, EVEN IF ADVISED OF THE POSSIBILITY OF SUCH DAMAGE.

MIT License

Copyright (c) 1998, 1999, 2000 Thai Open Source Software Center Ltd

Permission is hereby granted, free of charge, to any person obtaining a copy of this software and associated documentation files (the "Software"), to deal in the Software without restriction, including without limitation the rights to use, copy, modify, merge, publish, distribute, sublicense, and/or sell copies of the Software, and to permit persons to whom the Software is furnished to do so, subject to the following conditions:

The above copyright notice and this permission notice shall be included in all copies or substantial portions of the Software.

THE SOFTWARE IS PROVIDED "AS IS", WITHOUT WARRANTY OF ANY KIND, EXPRESS OR IMPLIED, INCLUDING BUT NOT LIMITED TO THE WARRANTIES OF MERCHANTABILITY, FITNESS FOR A PARTICULAR PURPOSE AND NONINFRINGEMENT. IN NO EVENT SHALL THE AUTHORS OR COPYRIGHT HOLDERS BE LIABLE FOR ANY CLAIM, DAMAGES OR OTHER LIABILITY, WHETHER IN AN ACTION OF CONTRACT, TORT OR OTHERWISE, ARISING FROM, OUT OF OR IN CONNECTION WITH THE SOFTWARE OR THE USE OR OTHER DEALINGS IN THE SOFTWARE.

Copyright 2000 Computing Research Labs, New Mexico State University

Copyright 2001-2015 Francesco Zappa Nardelli

Permission is hereby granted, free of charge, to any person obtaining a copy of this software and associated documentation files (the "Software"), to deal in the Software without restriction, including without limitation the rights to use, copy, modify, merge, publish, distribute, sublicense, and/or sell copies of the Software, and to permit persons to whom the Software is furnished to do so, subject to the following conditions:

The above copyright notice and this permission notice shall be included in all copies or substantial portions of the Software.

THE SOFTWARE IS PROVIDED "AS IS", WITHOUT WARRANTY OF ANY KIND, EXPRESS OR IMPLIED, INCLUDING BUT NOT LIMITED TO THE WARRANTIES OF MERCHANTABILITY, FITNESS FOR A PARTICULAR PURPOSE AND NONINFRINGEMENT. IN NO EVENT SHALL THE COMPUTING RESEARCH LAB OR NEW MEXICO STATE UNIVERSITY BE LIABLE FOR ANY CLAIM, DAMAGES OR OTHER LIABILITY, WHETHER IN AN ACTION OF CONTRACT, TORT OR OTHERWISE, ARISING FROM, OUT OF OR IN CONNECTION WITH THE SOFTWARE OR THE USE OR OTHER DEALINGS IN THE SOFTWARE.

Written by Joel Sherrill <joel@OARcorp.com>.

COPYRIGHT (c) 1989-2000.

On-Line Applications Research Corporation (OAR).

Permission to use, copy, modify, and distribute this software for any purpose without fee is hereby granted, provided that this entire notice is included in all copies of any software which is or includes a copy or modification of this software.

THIS SOFTWARE IS BEING PROVIDED "AS IS", WITHOUT ANY EXPRESS OR IMPLIED WARRANTY. IN PARTICULAR, THE AUTHOR MAKES NO REPRESENTATION OR WARRANTY OF ANY KIND

CONCERNING THE MERCHANTABILITY OF THIS SOFTWARE OR ITS FITNESS FOR ANY PARTICULAR PURPOSE.

(1) Red Hat Incorporated

Copyright (c) 1994-2009 Red Hat, Inc. All rights reserved.

This copyrighted material is made available to anyone wishing to use, modify, copy, or redistribute it subject to the terms and conditions of the BSD License. This program is distributed in the hope that it will be useful, but WITHOUT ANY WARRANTY expressed or implied, including the implied warranties of MERCHANTABILITY or FITNESS FOR A PARTICULAR PURPOSE. A copy of this license is available at http://www.opensource.org/licenses. Any Red Hat trademarks that are incorporated in the source code or documentation are not subject to the BSD License and may only be used or replicated with the express permission of Red Hat, Inc.

(2) University of California, Berkeley

Copyright (c) 1981-2000 The Regents of the University of California.

All rights reserved.

Redistribution and use in source and binary forms, with or without modification, are permitted provided that the following conditions are met:

* Redistributions of source code must retain the above copyright notice, this list of conditions and the following disclaimer.
* Redistributions in binary form must reproduce the above copyright notice, this list of conditions and the following disclaimer in the documentation and/or other materials provided with the distribution.
* Neither the name of the University nor the names of its contributors may be used to endorse or promote products derived from this software without specific prior written permission.

THIS SOFTWARE IS PROVIDED BY THE COPYRIGHT HOLDERS AND CONTRIBUTORS "AS IS" AND ANY EXPRESS OR IMPLIED WARRANTIES, INCLUDING, BUT NOT LIMITED TO, THE IMPLIED WARRANTIES OF MERCHANTABILITY AND FITNESS FOR A PARTICULAR PURPOSE ARE DISCLAIMED. IN NO EVENT SHALL THE COPYRIGHT OWNER OR CONTRIBUTORS BE LIABLE FOR ANY DIRECT, INDIRECT, INCIDENTAL, SPECIAL, EXEMPLARY, OR CONSEQUENTIAL DAMAGES (INCLUDING, BUT NOT LIMITED TO, PROCUREMENT OF SUBSTITUTE GOODS OR SERVICES; LOSS OF USE, DATA, OR PROFITS; OR BUSINESS INTERRUPTION) HOWEVER CAUSED AND ON ANY THEORY OF LIABILITY, WHETHER IN CONTRACT, STRICT LIABILITY, OR TORT (INCLUDING NEGLIGENCE OR OTHERWISE) ARISING IN ANY WAY OUT OF THE USE OF THIS SOFTWARE, EVEN IF ADVISED OF THE POSSIBILITY OF SUCH DAMAGE.

The FreeType Project LICENSE

2006-Jan-27

Copyright 1996-2002, 2006 by

David Turner, Robert Wilhelm, and Werner Lemberg

Introduction

==========

The FreeType Project is distributed in several archive packages; some of them may contain, in addition to the FreeType font engine, various tools and contributions which rely on, or relate to, the FreeType Project.

This license applies to all files found in such packages, and which do not fall under their own explicit license. The license affects thus the FreeType font engine, the test programs, documentation and makefiles, at the very least.

This license was inspired by the BSD, Artistic, and IJG (Independent JPEG Group) licenses, which all encourage inclusion and use of free software in commercial and freeware products alike. As a consequence, its main points are that:

o We don't promise that this software works. However, we will be interested in any kind of bug reports. (`as is' distribution)

o You can use this software for whatever you want, in parts or full form, without having to pay us. (`royalty-free' usage)

o You may not pretend that you wrote this software. If you use it, or only parts of it, in a program, you must acknowledge somewhere in your documentation that you have used the FreeType code. (`credits')

We specifically permit and encourage the inclusion of this software, with or without modifications, in commercial products.

We disclaim all warranties covering The FreeType Project and assume no liability related to The FreeType Project.

Finally, many people asked us for a preferred form for a credit/disclaimer to use in compliance with this license. We thus encourage you to use the following text:

"""

Portions of this software are copyright © <year> The FreeType

Project (www.freetype.org). All rights reserved.

"""

Please replace <year> with the value from the FreeType version you actually use.

Legal Terms

==========

0. Definitions

Throughout this license, the terms `package', `FreeType Project', and `FreeType archive' refer to the set of files originally distributed by the authors (David Turner, Robert Wilhelm, and Werner Lemberg) as the `FreeType Project', be they named as alpha, beta or final release.

`You' refers to the licensee, or person using the project, where `using' is a generic term including compiling the project's source code as well as linking it to form a `program' or `executable'.

This program is referred to as `a program using the FreeType engine'.

This license applies to all files distributed in the original FreeType Project, including all source code, binaries and documentation, unless otherwise stated in the file in its original, unmodified form as distributed in the original archive.

If you are unsure whether or not a particular file is covered by this license, you must contact us to verify this.

The FreeType Project is copyright (C) 1996-2000 by David Turner, Robert Wilhelm, and Werner Lemberg. All rights reserved except as specified below.

1. No Warranty

THE FREETYPE PROJECT IS PROVIDED `AS IS' WITHOUT WARRANTY OF ANY KIND, EITHER EXPRESS OR IMPLIED, INCLUDING, BUT NOT LIMITED TO, WARRANTIES OF MERCHANTABILITY AND FITNESS FOR A PARTICULAR PURPOSE. IN NO EVENT WILL ANY OF THE AUTHORS OR COPYRIGHT HOLDERS BE LIABLE FOR ANY DAMAGES CAUSED BY THE USE OR THE INABILITY TO USE, OF THE FREETYPE PROJECT.

2. Redistribution

This license grants a worldwide, royalty-free, perpetual and irrevocable right and license to use, execute, perform, compile, display, copy, create derivative works of, distribute and sublicense the FreeType Project (in both source and object code forms) and derivative works thereof for any purpose; and to authorize others to exercise some or all of the rights granted herein, subject to the following conditions:

o Redistribution of source code must retain this license file (`FTL.TXT') unaltered; any additions, deletions or changes to the original files must be clearly indicated in accompanying documentation. The copyright notices of the unaltered, original files must be preserved in all copies of source files.

o Redistribution in binary form must provide a disclaimer that states that the software is based in part of the work of the FreeType Team, in the distribution documentation. We also encourage you to put an URL to the FreeType web page in your documentation, though this isn't mandatory.

These conditions apply to any software derived from or based on the FreeType Project, not just the unmodified files. If you use our work, you must acknowledge us. However, no fee need be paid to us.

3. Advertising

Neither the FreeType authors and contributors nor you shall use the name of the other for commercial, advertising, or promotional purposes without specific prior written permission.

We suggest, but do not require, that you use one or more of the following phrases to refer to this software in your documentation or advertising materials: `FreeType Project', `FreeType Engine', `FreeType library', or `FreeType Distribution'.

As you have not signed this license, you are not required to accept it. However, as the FreeType Project is copyrighted material, only this license, or another one contracted with the authors, grants you the right to use, distribute, and modify it.

Therefore, by using, distributing, or modifying the FreeType Project, you indicate that you understand and accept all the terms of this license.

4. Contacts

There are two mailing lists related to FreeType:

o freetype@nongnu.org

Discusses general use and applications of FreeType, as well as future and wanted additions to the library and distribution.

If you are looking for support, start in this list if you haven't found anything to help you in the documentation.

o freetype-devel@nongnu.org

Discusses bugs, as well as engine internals, design issues, specific licenses, porting, etc.

Our home page can be found at

http://www.freetype.org

--- end of FTL.TXT ---

The TWAIN Toolkit is distributed as is. The developer and distributors of the TWAIN Toolkit expressly disclaim all implied, express or statutory warranties including, without limitation, the implied warranties of merchantability, noninfringement of third party rights and fitness for a particular purpose. Neither the developers nor the distributors will be liable for damages, whether direct, indirect, special, incidental, or consequential, as a result of the reproduction, modification, distribution or other use of the TWAIN Toolkit.

JSON for Modern C++

Copyright (c) 2013-2017 Niels Lohmann

Permission is hereby granted, free of charge, to any person obtaining a copy of this software and associated documentation files (the "Software"), to deal in the Software without restriction, including without limitation the rights to use, copy, modify, merge, publish, distribute, sublicense, and/or sell copies of the Software, and to permit persons to whom the Software is furnished to do so, subject to the following conditions:

The above copyright notice and this permission notice shall be included in all copies or substantial portions of the Software.

THE SOFTWARE IS PROVIDED "AS IS", WITHOUT WARRANTY OF ANY KIND, EXPRESS OR IMPLIED, INCLUDING BUT NOT LIMITED TO THE WARRANTIES OF MERCHANTABILITY, FITNESS FOR A PARTICULAR PURPOSE AND NONINFRINGEMENT. IN NO EVENT SHALL THE AUTHORS OR COPYRIGHT HOLDERS BE LIABLE FOR ANY CLAIM, DAMAGES OR OTHER LIABILITY, WHETHER IN AN ACTION OF CONTRACT, TORT OR OTHERWISE, ARISING FROM, OUT OF OR IN CONNECTION WITH THE SOFTWARE OR THE USE OR OTHER DEALINGS IN THE SOFTWARE.

Copyright (c) 2011 - 2015 ARM LIMITED

All rights reserved.

Redistribution and use in source and binary forms, with or without modification, are permitted provided that the following conditions are met:

- Redistributions of source code must retain the above copyright notice, this list of conditions and the following disclaimer.
- Redistributions in binary form must reproduce the above copyright notice, this list of conditions and the following disclaimer in the documentation and/or other materials provided with the distribution.
- Neither the name of ARM nor the names of its contributors may be used to endorse or promote products derived from this software without specific prior written permission.

THIS SOFTWARE IS PROVIDED BY THE COPYRIGHT HOLDERS AND CONTRIBUTORS "AS IS" AND ANY EXPRESS OR IMPLIED WARRANTIES, INCLUDING, BUT NOT LIMITED TO, THE IMPLIED WARRANTIES OF MERCHANTABILITY AND FITNESS FOR A PARTICULAR PURPOSE ARE DISCLAIMED. IN NO EVENT SHALL COPYRIGHT HOLDERS AND CONTRIBUTORS BE LIABLE FOR ANY DIRECT, INDIRECT, INCIDENTAL, SPECIAL, EXEMPLARY, OR CONSEQUENTIAL DAMAGES (INCLUDING, BUT NOT LIMITED TO, PROCUREMENT OF SUBSTITUTE GOODS OR SERVICES; LOSS OF USE, DATA, OR PROFITS; OR BUSINESS INTERRUPTION) HOWEVER CAUSED AND ON ANY THEORY OF LIABILITY, WHETHER IN CONTRACT, STRICT LIABILITY, OR TORT (INCLUDING NEGLIGENCE OR OTHERWISE) ARISING IN ANY WAY OUT OF THE USE OF THIS SOFTWARE, EVEN IF ADVISED OF THE POSSIBILITY OF SUCH DAMAGE.

The following applies only to products supporting Wi-Fi.

(c) 2009-2013 by Jeff Mott. All rights reserved.

Redistribution and use in source and binary forms, with or without modification, are permitted provided that the following conditions are met:

* Redistributions of source code must retain the above copyright notice, this list of conditions, and the following disclaimer.
* Redistributions in binary form must reproduce the above copyright notice, this list of conditions, and the following disclaimer in the documentation or other materials provided with the distribution.
* Neither the name CryptoJS nor the names of its contributors may be used to endorse or promote products derived from this software without specific prior written permission.

THIS SOFTWARE IS PROVIDED BY THE COPYRIGHT HOLDERS AND CONTRIBUTORS "AS IS," AND ANY EXPRESS OR IMPLIED WARRANTIES, INCLUDING, BUT NOT LIMITED TO, THE IMPLIED WARRANTIES OF MERCHANTABILITY AND FITNESS FOR A PARTICULAR PURPOSE, ARE DISCLAIMED. IN NO EVENT SHALL THE COPYRIGHT HOLDER OR CONTRIBUTORS BE LIABLE FOR ANY DIRECT, INDIRECT, INCIDENTAL, SPECIAL, EXEMPLARY, OR CONSEQUENTIAL DAMAGES (INCLUDING, BUT NOT LIMITED TO, PROCUREMENT OF SUBSTITUTE GOODS OR SERVICES; LOSS OF USE, DATA, OR PROFITS; OR BUSINESS INTERRUPTION) HOWEVER CAUSED AND ON ANY THEORY OF LIABILITY, WHETHER IN CONTRACT, STRICT LIABILITY, OR TORT (INCLUDING NEGLIGENCE OR OTHERWISE) ARISING IN ANY WAY OUT OF THE USE OF THIS SOFTWARE, EVEN IF ADVISED OF THE POSSIBILITY OF SUCH DAMAGE.

Basic Operation

- Printing Photos from a Computer
- Printing Photos from a Smartphone/Tablet
- Printing a Disc Label from a Computer

Printing Photos from a Computer

This section describes how to print photos with Easy-PhotoPrint Editor.

1. Open paper support (A) and pull out paper support extension (B).

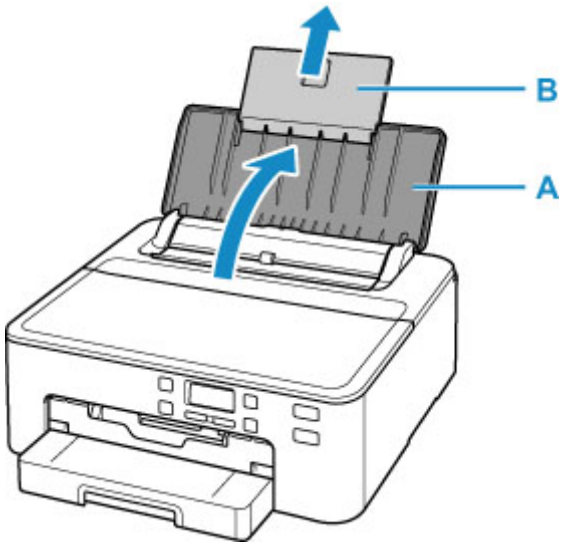

2. Open the feed slot cover (C).

3. Slide right paper guide (D) to open both paper guides.

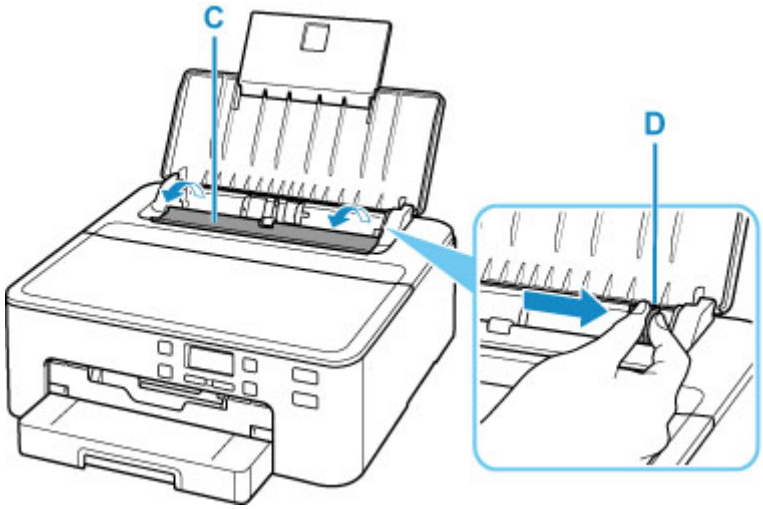

4. Load photo paper in portrait orientation WITH PRINT SIDE FACING UP.

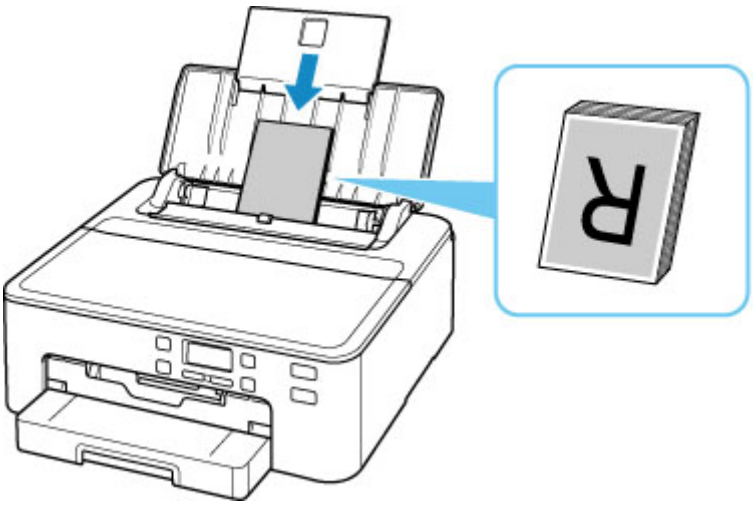

5. Slide right paper guide (D) to align with both sides of paper stack.

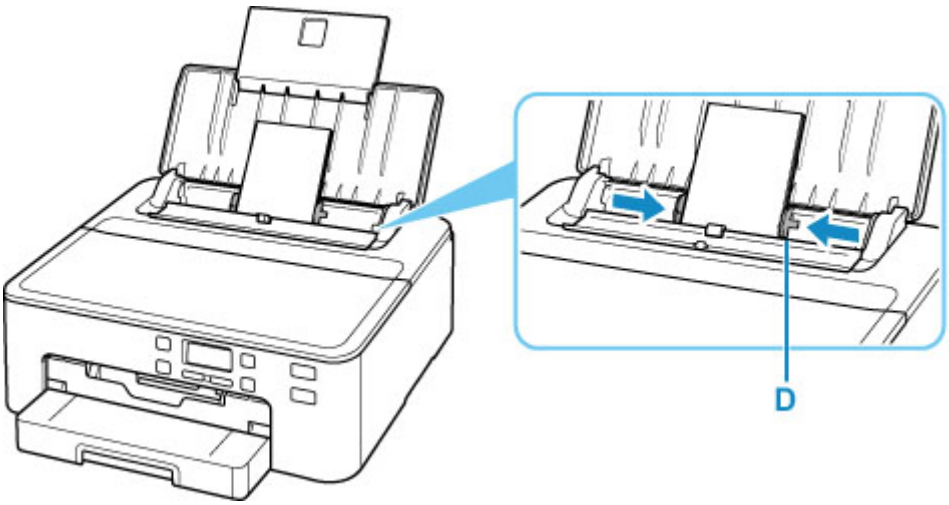

6. Close feed slot cover (C) gently.

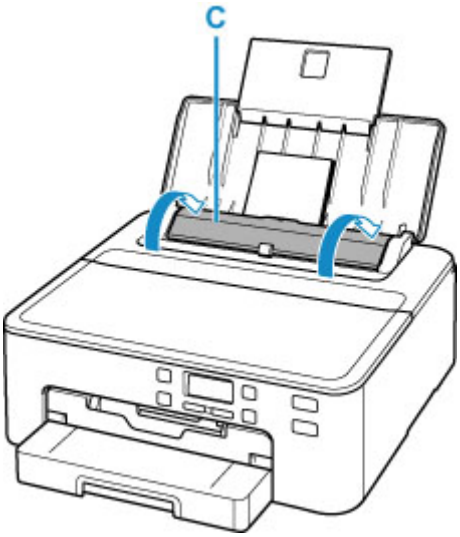

After closing the feed slot cover, the paper information registration screen for the rear tray appears on the LCD.

7. Press the **OK** button.

Save the rear tray paper
[OK]Next

8. Use the ◄ ► button to select the size of the loaded paper on the rear tray, then press the **OK** button.

Size: ◄ KG/4"x6" ►
Type: *Plain paper

Note

- The * (asterisk) on the LCD indicates the current setting.

9. Use the ◄ ► button to select the type of the loaded paper on the rear tray, then press the **OK** button.

Size: KG/4"x6"
Type: ◄ PlusGlossyII ►

Follow the instructions of any messages displayed to register the paper information.

10. Pull out paper output tray (E) and extend paper output support (F).

Be sure to pull out the paper output tray before printing. If not, printing will not start.

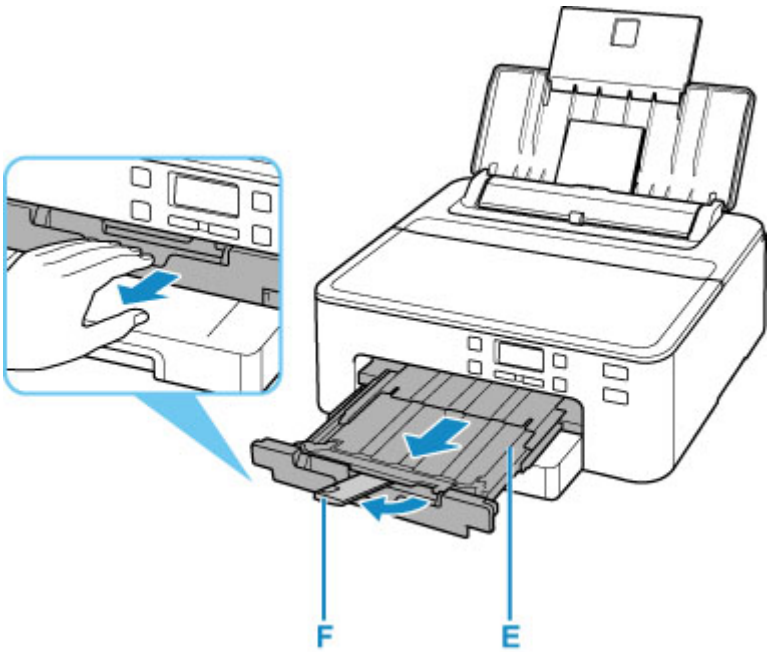

11. Start Easy-PhotoPrint Editor.

For Windows:

The procedure below is for a computer running the Windows 10 operating system.

From the **Start** menu, select (**All apps** >) **Canon Utilities** > **Easy-PhotoPrint Editor**.

For macOS:

From the **Go** menu in **Finder**, select **Application** and double-click the **Canon Utilities** folder, the **Easy-PhotoPrint Editor** folder, and then the **Easy-PhotoPrint Editor** icon.

12. Click **Photos** icon (G).

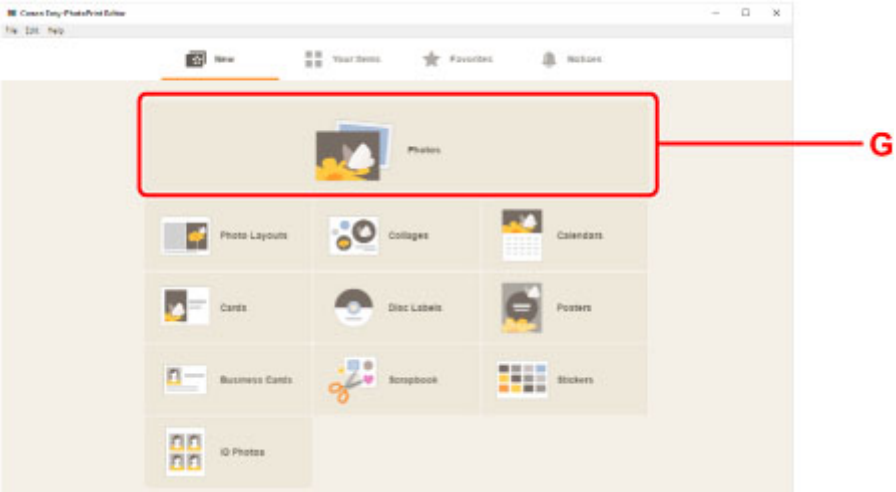

13. Click **Browse** (H) in **From computer:** and select folder with photos you want to print.

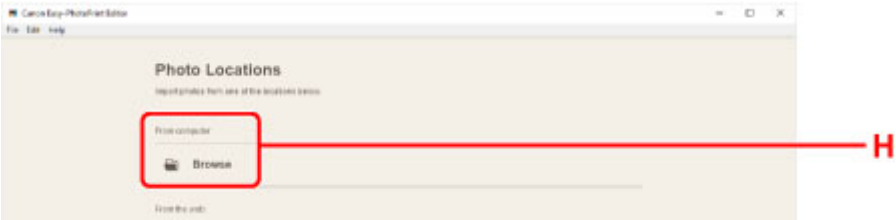

14. Click photos (I) you want to print and select **Open** (J).

For Windows:

To select two or more photos at a time, click photos while pressing the Ctrl key.

For macOS:

To select two or more photos at a time, click photos while pressing the command key.

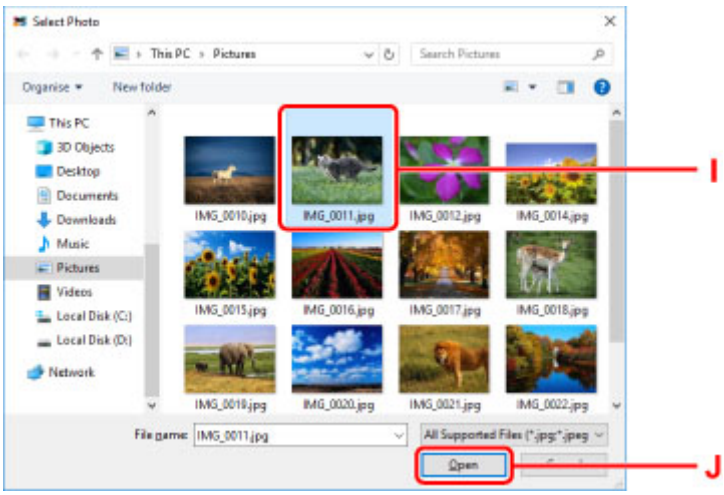

15. Specify number of copies and other options under **Print Settings** (K).

For Windows:

Specify the number of copies, your model name, the paper size, and other options.

For macOS:

Specify the number of copies, the paper size, and other options.

Note

- Selecting **Same No. of each photo** enables you to specify the number of copies for all photos with a single setting.
- Selecting **Same No. of each photo** disables the number-of-copies setting specified for each photo. When unchecked, the previous settings for each copy are re-enabled. ▼ for specifying the number of copies is also re-enabled.

16. Start printing.

For Windows:

Click **Print** (L).

For macOS:

Click **Next**. When the Print dialog appears, specify your model name, paper, and other options, and then click **Print**.

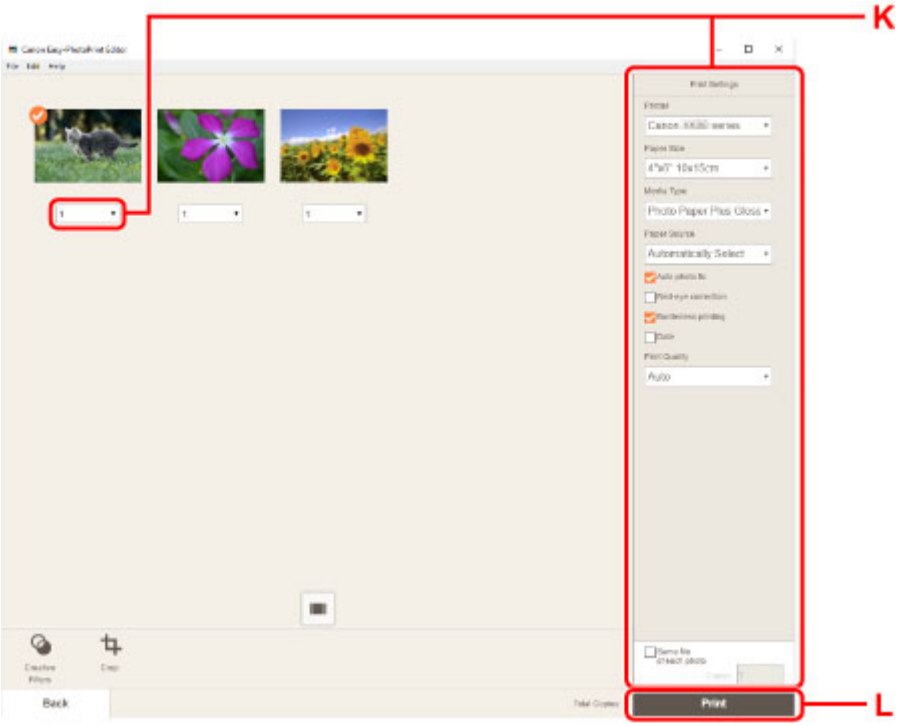

Note

- Easy-PhotoPrint Editor lets you easily create and print original collages, cards, or calendars using your favorite photos.

  Easy-PhotoPrint Editor Guide

Printing Photos from a Smartphone/Tablet

This section describes how to print photos with Canon PRINT Inkjet/SELPHY.

For details on how to download Canon PRINT Inkjet/SELPHY, see below.

Print Photos from Your Smartphone

1. Open paper support (A) and pull out paper support extension (B).

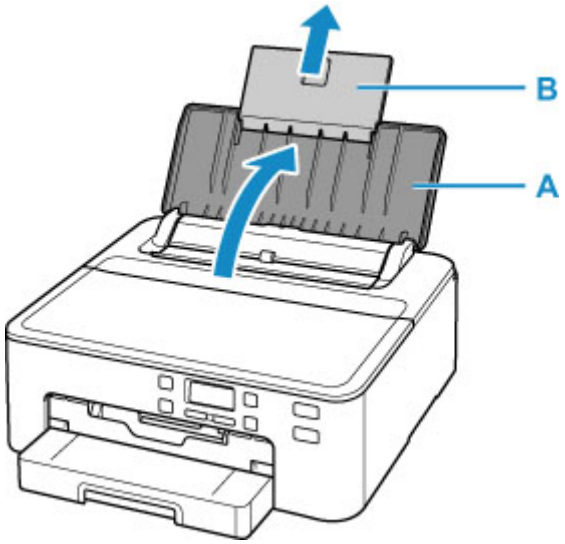

2. Open the feed slot cover (C).

3. Slide right paper guide (D) to open both paper guides.

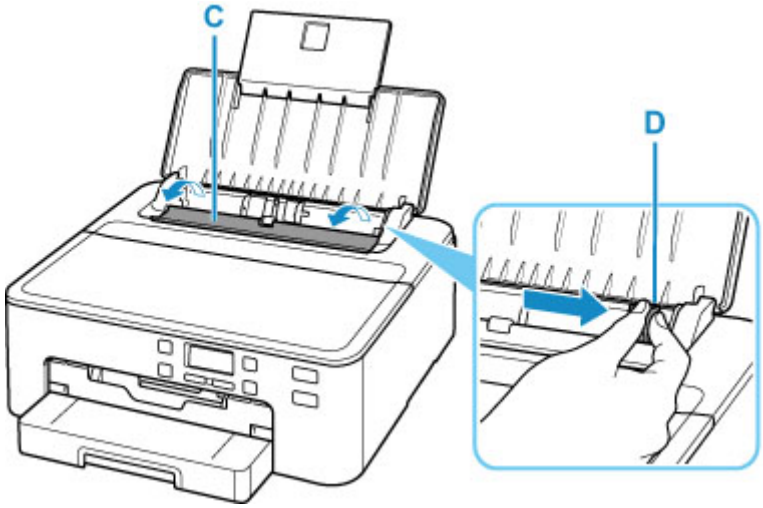

4. Load photo paper in portrait orientation WITH PRINT SIDE FACING UP.

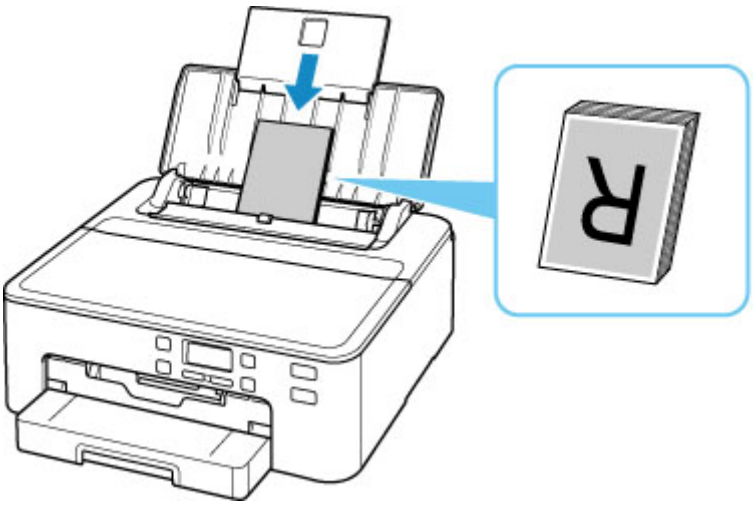

5. Slide right paper guide (D) to align with both sides of paper stack.

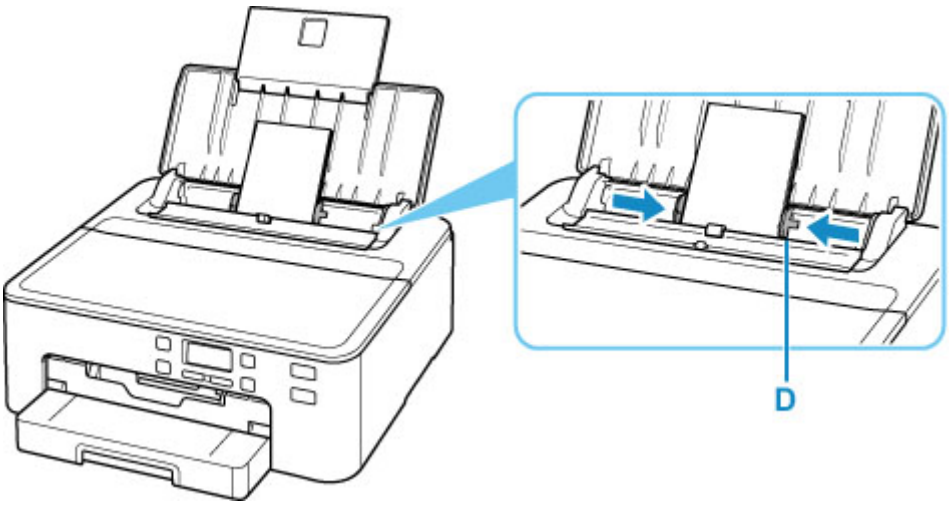

6. Close feed slot cover (C) gently.

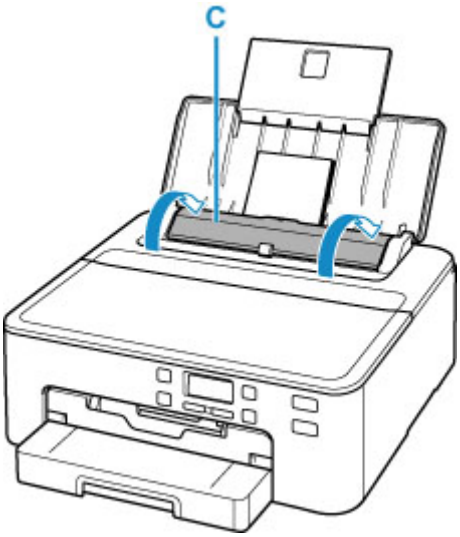

After closing the feed slot cover, the paper information registration screen for the rear tray appears on the LCD.

7. Press the **OK** button.

```
Save the rear tray paper
[OK]Next
```

8. Use the ◄ ► button to select the size of the loaded paper on the rear tray, then press the **OK** button.

```
Size:  ◄ KG/4"x6" ►
Type:    *Plain paper
```

Note

- The * (asterisk) on the LCD indicates the current setting.

9. Use the ◄ ► button to select the type of the loaded paper on the rear tray, then press the **OK** button.

```
Size:    KG/4"x6"
Type:  ◄ PlusGlossyII ►
```

Follow the instructions of any messages displayed to register the paper information.

10. Pull out paper output tray (E) and extend paper output support (F).

Be sure to pull out the paper output tray before printing. If not, printing will not start.

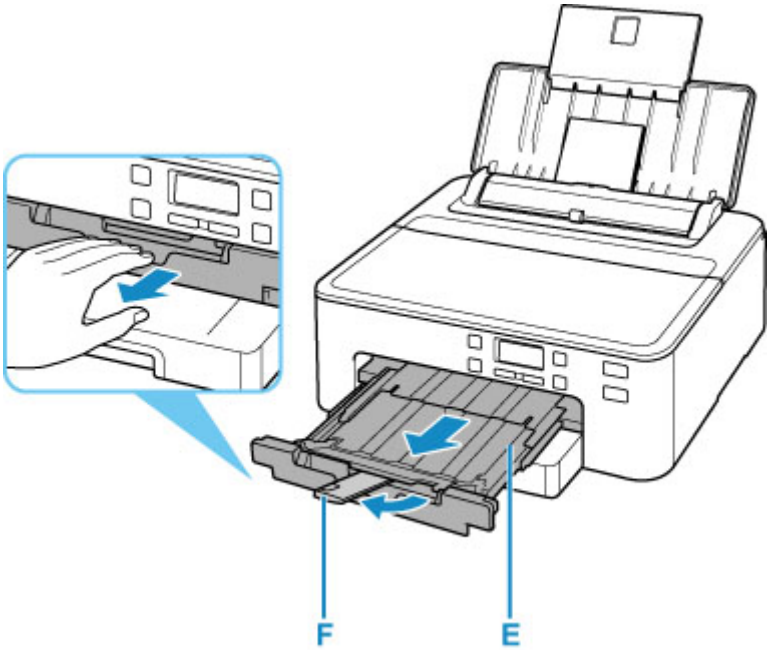

11. Start (Canon PRINT Inkjet/SELPHY) from your smartphone/tablet.

12. Select **Photo Print** on Canon PRINT Inkjet/SELPHY.

The list of photos saved on your smartphone/tablet is displayed.

13. Select a photo.

You can also select multiple photos at once.

14. Specify the number of copies, paper size, etc.

15. Select **Print**.

Printing a Disc Label from a Computer

This section describes how to print photos on a printable disc with Easy-PhotoPrint Editor.

Important

- Do not mount the multi-purpose tray until the message prompting you to load the printable disc appears. Doing so can damage the printer.

1. Start Easy-PhotoPrint Editor.

   For Windows:

   The procedure below is for a computer running the Windows 10 operating system.

   From the **Start** menu, select (**All apps** >) **Canon Utilities** > **Easy-PhotoPrint Editor**.

   For macOS:

   From the **Go** menu in **Finder**, select **Application** and double-click the **Canon Utilities** folder, the **Easy-PhotoPrint Editor** folder, and then the **Easy-PhotoPrint Editor** icon.

2. Click **Disc Labels** icon (A).

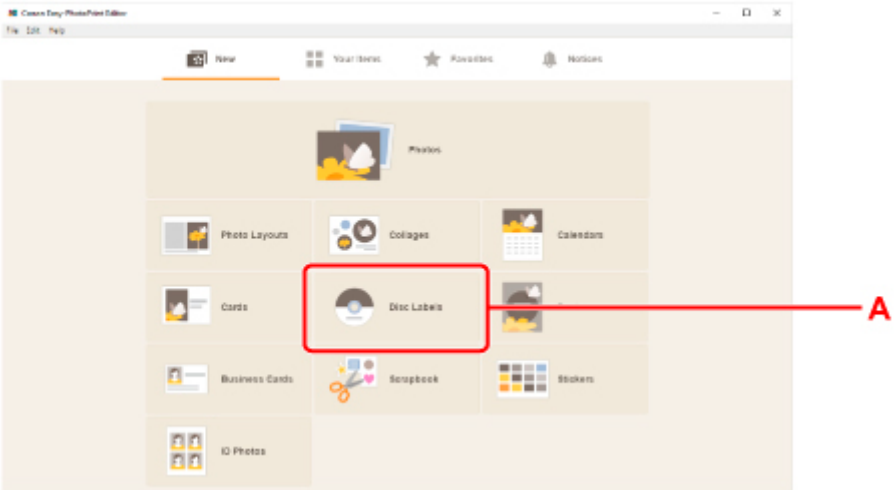

3. Select template (B).

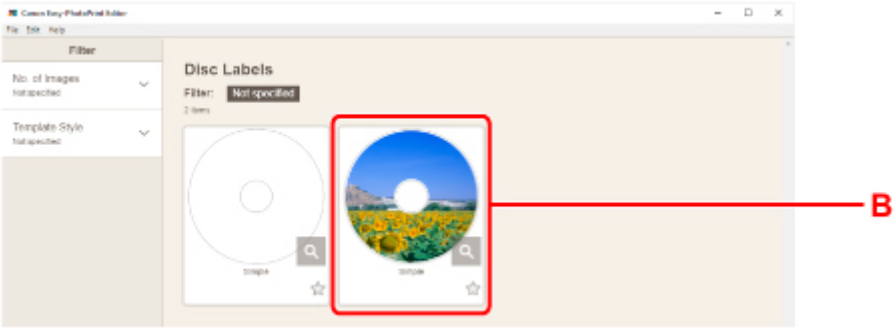

4. Select type of printable disc (C) and select **Next** (D).

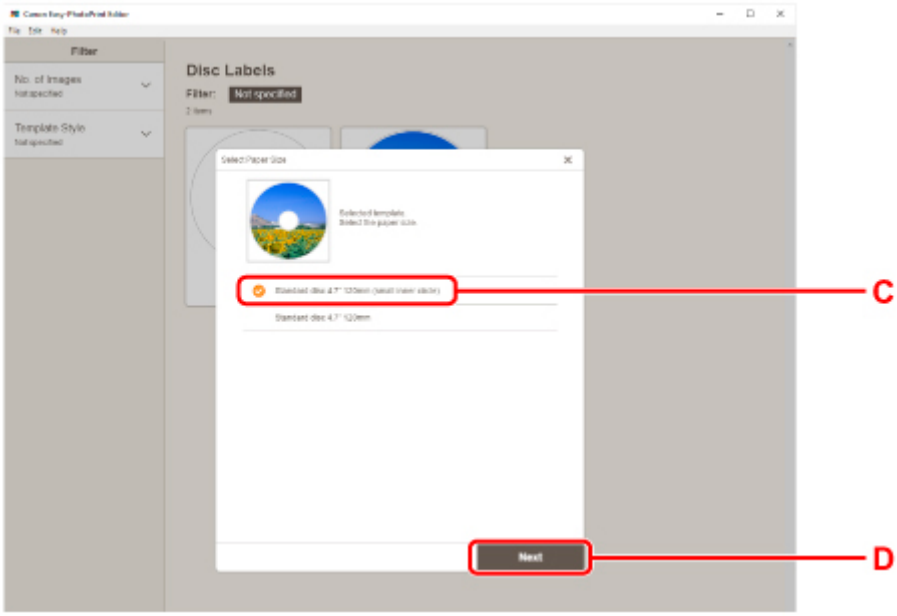

5. Click **Browse** (E) in **From computer**: and select folder with photos you want to print.

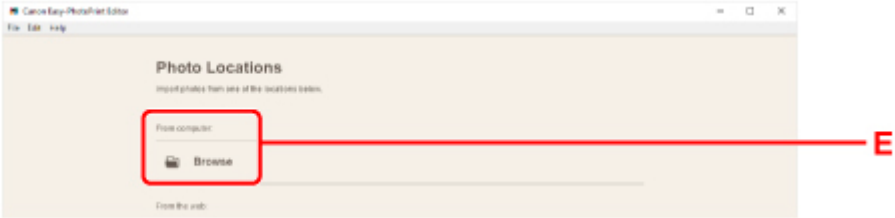

6. Click photos (F) you want to print and select **Open** (G).

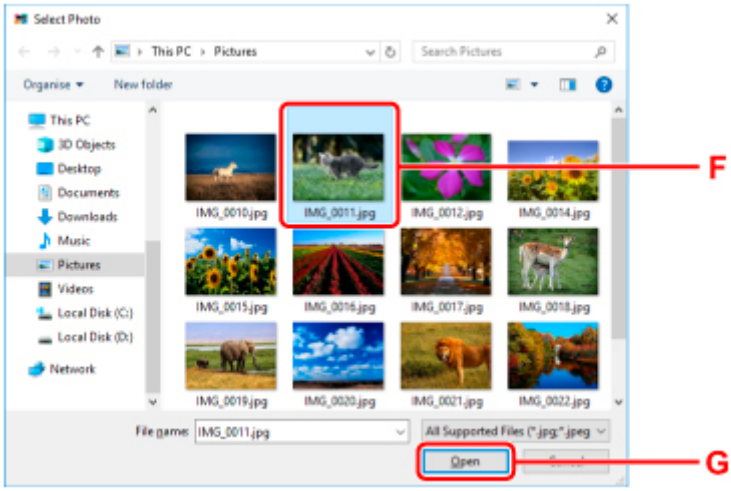

7. Edit disc label and select **Next** (H).

You can change the background or add texts.

Easy-PhotoPrint Editor Guide

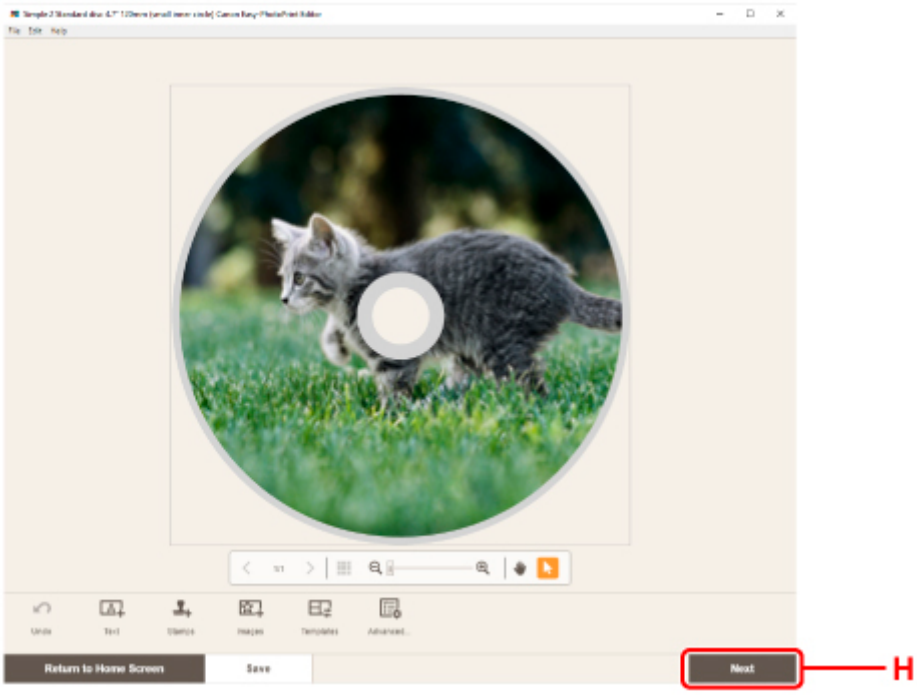

8. Specify number of copies and other options under **Print Settings** (I).

   For Windows:

   Specify the number of copies, your printer name, and other options.

   For macOS:

   Specify the number of copies and other options.

9. Start printing.

   For Windows:

   Click **Print** (J).

   For macOS:

   Click **Next**. When the Print dialog appears, specify your model name and other options, and then click **Print**.

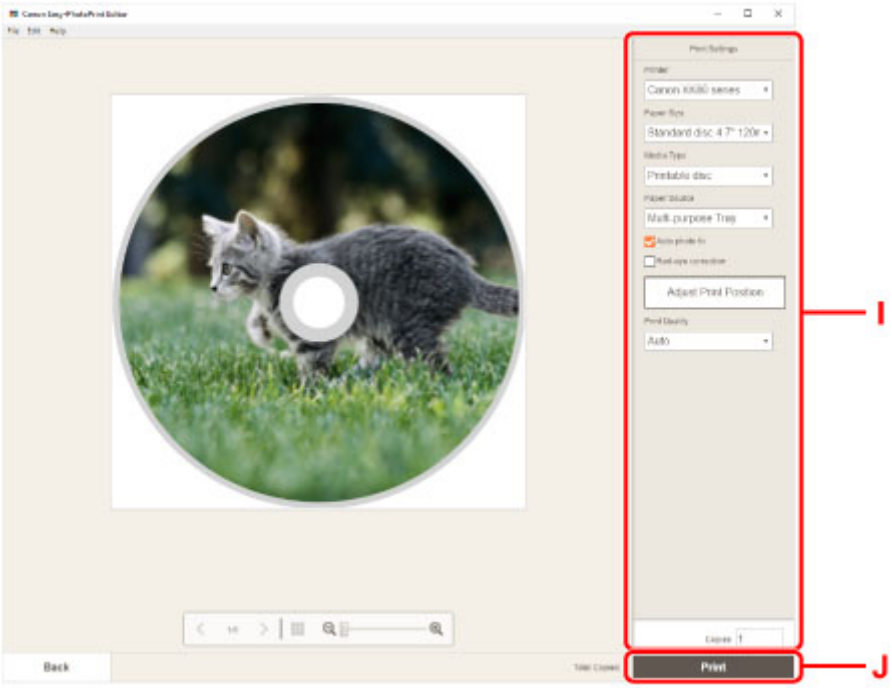

10. When message prompting you to load printable disc appears on printer's LCD, remove cassette from printer and then detach multi-purpose tray from back of cassette.

Insert the removed cassette back into the printer.

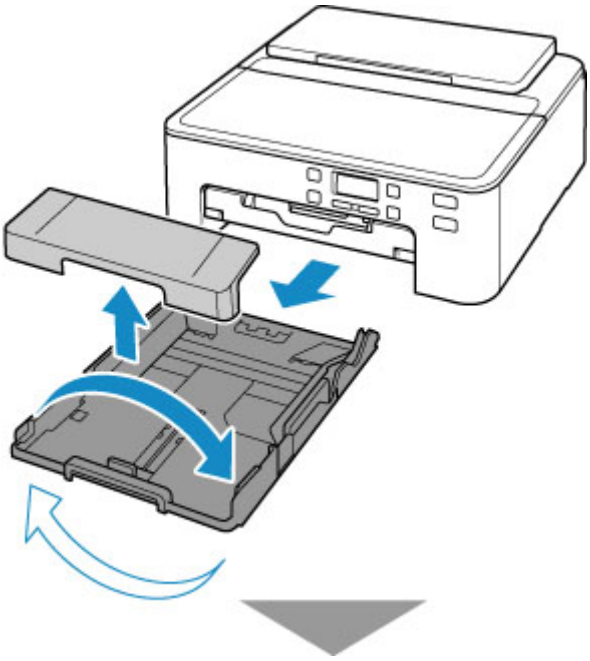

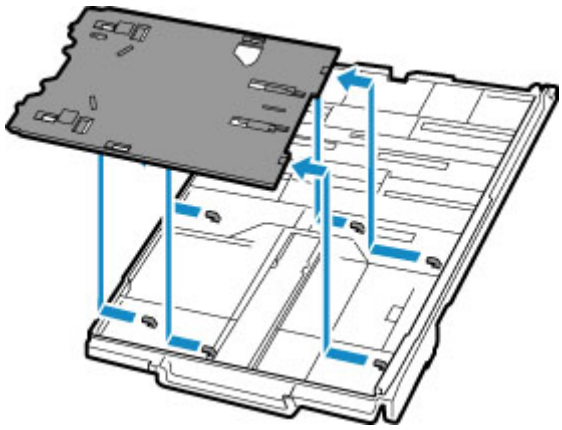

11. Push paper output tray (K) all the way in.

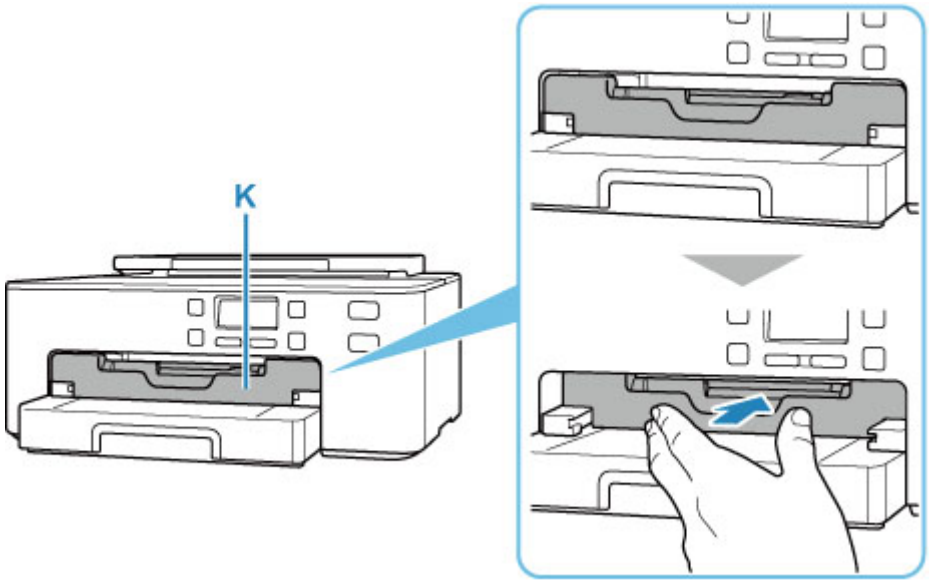

12. Place printable disc on multi-purpose tray.

1. WITH PRINT SIDE FACING UP, place printable disc, and press it against lock (L) at bottom.

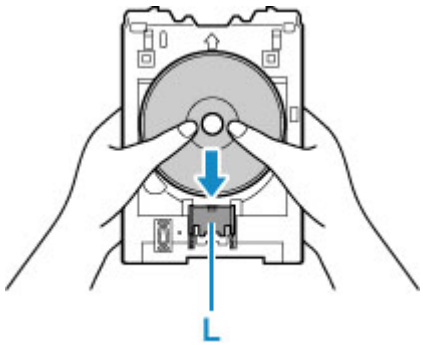

2. While pressing down lock with printable disc, insert top of printable disc into slits (M).

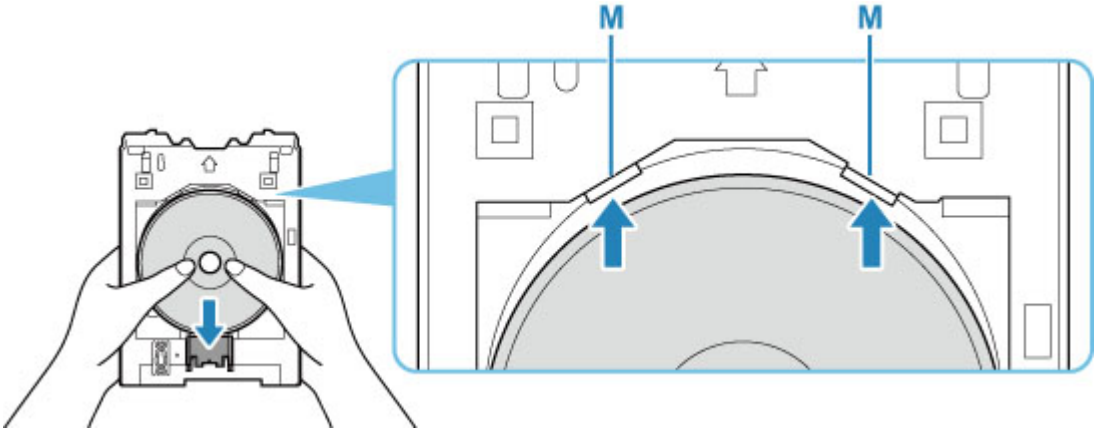

13. Place multi-purpose tray on multi-purpose tray guide.

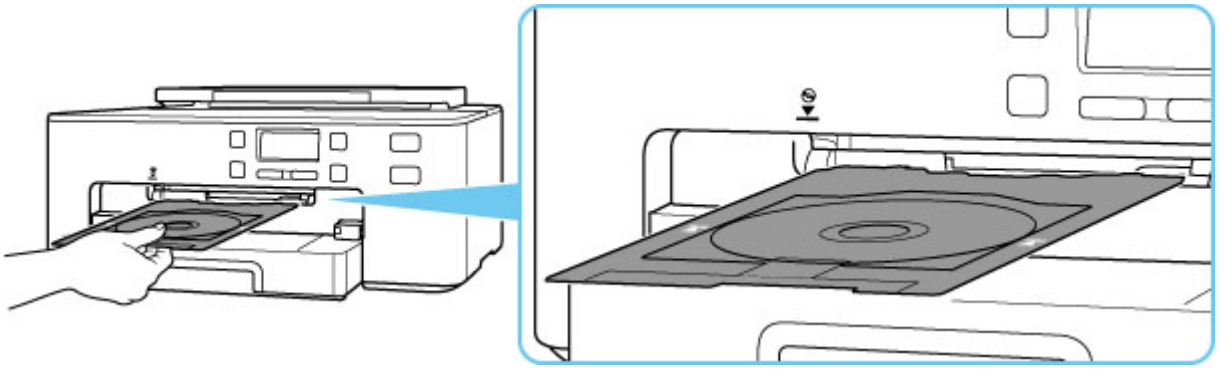

14. Insert multi-purpose tray straight in in horizontal direction until arrow (▼) on multi-purpose tray guide is approximately aligned with arrow (▲) on multi-purpose tray.

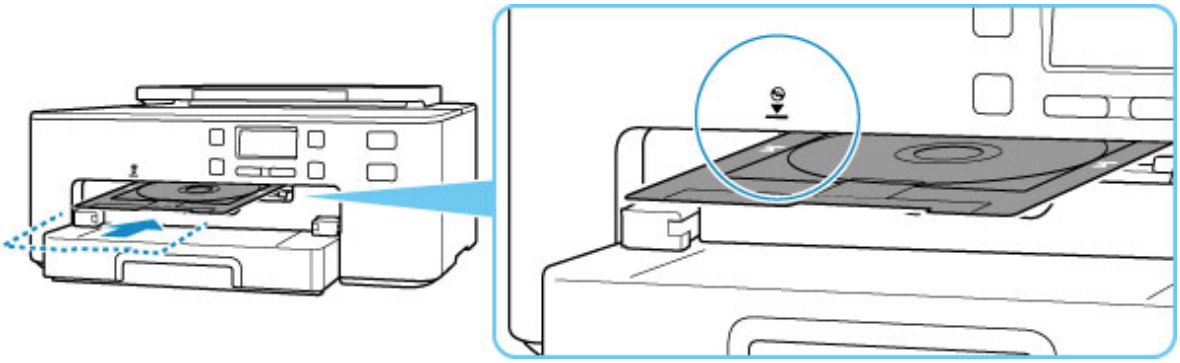

15. Press **OK** button on printer.

The multi-purpose tray is drawn into the printer and printing will start.

16. After printing is complete, pull multi-purpose tray from printer to remove it.

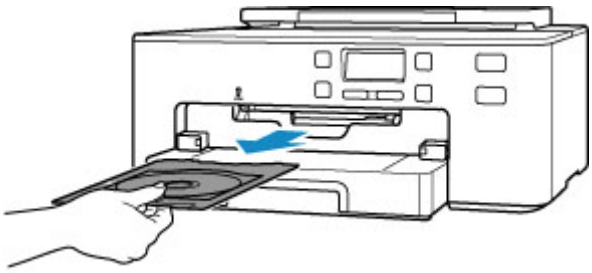

17. While pressing down lock (L), take out printable disc from slits (M) on multi-purpose tray, and remove it.

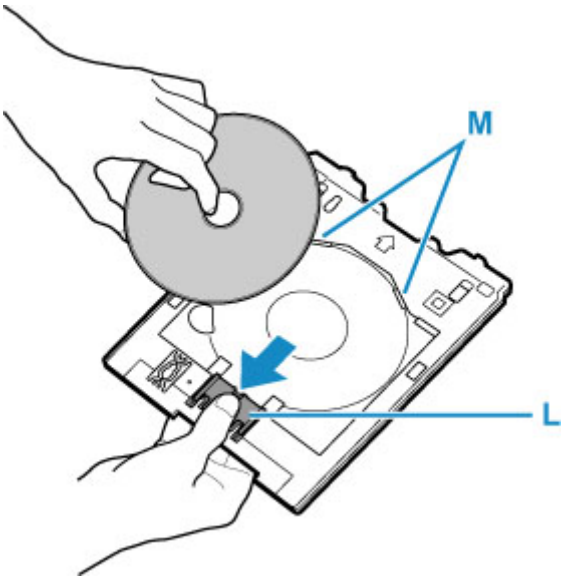

18. Pull paper output tray (K) towards you until it aligns with operation panel (N).

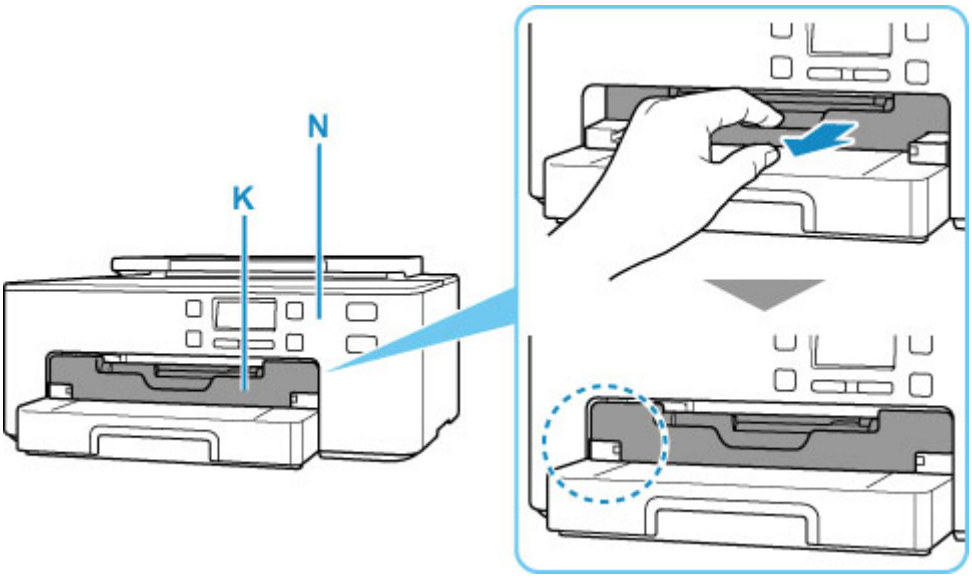

Note

- Easy-PhotoPrint Editor enables you to print photos onto the disc label with various layouts.

  Easy-PhotoPrint Editor Guide

Network

Available Connection Methods

The following connection methods are available on the printer.

- **Wireless Connection**

  Connect the printer and devices (e.g. computer/smartphone/tablet) using a wireless router.

  If you have a wireless router, we recommend you use one for wireless connection.

  - Connection methods vary depending on the wireless router type.
  - You can change network settings such as the network name (SSID) and security protocol on the printer.
  - When the connection between a device and a wireless router is completed and (Wi-Fi icon) is displayed in the device's screen, you can connect the device to the printer using the wireless router.

- **Wireless Direct**

  Connect the printer and devices (e.g. computer/smartphone/tablet) without using a wireless router.

  - While you are using the printer with Wireless Direct, Internet connection from the printer becomes unavailable. In that case, web services for the printer cannot be used.
  - If you connect a device connected to the Internet via a wireless router to the printer that is in the Wireless Direct, the connection between the device and wireless router will be disabled. In that case, the connection of the device may switch to a mobile data connection automatically depending on your device. Transmission fees for connecting to the Internet using a mobile data connection apply.
  - In the Wireless Direct, you can connect up to five devices at the same time. If you try to connect a sixth device while five devices are already connected, an error will appear. If an error appears, disconnect a device you do not use and configure settings again.
  - Network settings such as the network name (SSID) and security protocol are specified automatically.

- **Wired Connection**

  Connect the printer and hub/router using a LAN cable. Prepare a LAN cable.

  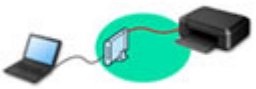

Note

- You can connect the printer and computer using a USB cable (USB connection). Prepare a USB cable. For details, see Connects to Another Computer via LAN/Changes from USB to LAN Connection.

Network Connection Settings/Setup

Perform connection setup for the printer and computer/smartphone/tablet.

For more on setup procedure, click here.

Changing Network Settings

See below for changing connection settings for the printer and computer/smartphone/tablet.

- To change network connection method:
  - Reconfiguration Method of LAN Connection/Reconfiguration Method of Wi-Fi Connection
  - Changing the Connection Mode
- To add computer/smartphone/tablet to the printer:
  - Connects to Another Computer via LAN/Changes from USB to LAN Connection
- To use Wireless Direct temporarily:
  - Printing with Wireless Direct

IJ Network Device Setup Utility

IJ Network Device Setup Utility checks or diagnoses the settings of the printer and those of computer and restores the status of them if anything is wrong with network connection. Select either link below to download IJ Network Device Setup Utility.

- Checking Printer Connection Status Using IJ Network Device Setup Utility
- Performing/Changing Network Settings (Windows)

  For Windows, you can perform network settings using IJ Network Device Setup Utility.

  - IJ Network Device Setup Utility (Windows)
- Diagnosing and Repairing Network Settings (Windows/macOS)

  You can diagnose or repair network settings using IJ Network Device Setup Utility.

  - **For Windows:**
    - IJ Network Device Setup Utility (Windows)
  - **For macOS:**
    - IJ Network Device Setup Utility (macOS)

Network Connection Tips

See below for tips on using the printer via network connection.

- Network Connection Tips
- Handling Printer Configuration using the Web Browser
- Countermeasures against Unauthorized Access

Troubleshooting

See Network Settings and Common Problems for troubleshooting on network connection.

Notice/Restriction

See below for details.

- Restrictions on network settings:
  - Restrictions
- Notices when printing using web service:
  - Notice for Web Service Printing

Restrictions

When connecting another device while a device (such as a computer) is already connected to the printer, connect it using the same connection method as the connected device.
If you connect using a different connection method, the connection to the device in use will be disabled.

Connection Using a Wired Network cannot be performed on printers that do not support a wired connection.

Connect via wireless router

- You cannot establish a printer with wireless and wired connections at the same time.
- Make sure your device and the wireless router are connected. For details on checking these settings, see the manual supplied with the wireless router or contact its manufacturer.
  As for a device already connected to the printer without using a wireless router, reconnect it via a wireless router.
- Configuration, router functions, setup procedures and security settings of wireless routers vary depending on the system environment. For details, see the manual for your wireless router or contact its manufacturer.
- This printer does not support IEEE802.11ac, IEEE802.11a, or IEEE802.11n (5 GHz). Check if your device supports IEEE802.11n (2.4 GHz), IEEE802.11g or IEEE802.11b.
- If your device is set to the "IEEE802.11n only" mode, WEP or TKIP cannot be used as a security protocol. Change the security protocol for your device to something other than WEP and TKIP or change the setting to something other than "IEEE802.11n only."
  The connection between your device and the wireless router will be temporarily disabled while the setting is changed. Do not proceed to the next screen of this guide until setup is complete.
- For office use, consult your network administrator.
- Note that if you connect to a network with no security protection, your personal information could be disclosed to a third party.

Wireless Direct

Important

- If a device is connected to the Internet via a wireless router, and you then connect it to a printer in Wireless Direct mode, the existing connection between the device and wireless router will be disabled. In that case, the connection of the device may switch to a mobile data connection automatically depending on your device. When you connect to the Internet using a mobile data connection, charges may apply depending on your contract.
  - When you connect a device and the printer using Wireless Direct, the connection information will be saved to Wi-Fi settings. The device may be connected to the printer automatically even after disconnecting it or connecting it to another wireless router.
  - To prevent automatic connection to the printer in Wireless Direct mode, change the connection mode after using the printer, or set not to connect automatically in the Wi-Fi settings of the device.
    For details on changing the settings of your device, see the manual supplied with the device or contact its manufacturer.

- If you connect a device and the printer using Wireless Direct, Internet connection may become unavailable depending on your environment. In that case, web services for the printer cannot be used.
- In Wireless Direct mode, you can connect up to five devices at the same time. If you try to connect a sixth device while five devices are already connected, an error will appear.
  If an error appears, disconnect a device that does not use the printer, then configure settings again.
- Devices connected to the printer using Wireless Direct cannot communicate with each other.
- Firmware updates for the printer are not available while using Wireless Direct.
- When a device has been connected to the printer without using a wireless router and you want to set it up again using the same connection method, disconnect it first. Disable the connection between the device and printer in the Wi-Fi setting screen.

Connection Using a Wired Network

- You cannot establish a printer with wireless and wired connections at the same time.
- When using a router, connect the printer and a device to the LAN side (same network segment).

Network Connection Tips

- Default Network Settings
- Detect Same Printer Name
- Connects to Another Computer via LAN/Changes from USB to LAN Connection
- Printing Network Settings
- Reconfiguration Method of LAN Connection/Reconfiguration Method of Wi-Fi Connection

Default Network Settings

LAN Connection Defaults

Item	Default
Change wireless/wired LAN	Disable LAN
Network name (SSID)	BJNPSETUP
Wi-Fi security	Disable
IP address (**IPv4**)	**Auto setup**
IP address (**IPv6**)	Auto setup
Set printer name*	XXXXXXXXXXXX
Enable/disable IPv6	**Enable**
Enable/disable WSD	**Enable**
Timeout setting	**15 minutes**
Enab./disab. Bonjour	**Enable**
Service name	Canon TS700 series
LPR setting	**Enable**
RAW protocol	**Enable**
LLMNR	**Enable**
PictBridge commun. (**Enable/disable**)	**Enable**
DRX setting (**Wired LAN**)	**Enable**

("XX" represents alphanumeric characters.)

* Default value depends on printer. To check value, use operation panel.

LAN settings

Wireless Direct Defaults

Item	Default
Network name (SSID) for wireless direct	DIRECT-abXX-TS700series *1
WL Direct dev. name	DIRECT-abXX-TS700series *1
Password	YYYYYYYYYY *2
Security method	**WPA2-PSK (AES)**

Confirm request	Displayed

*1 "ab" is specified at random and "XX" represents last two digits of printer's MAC address. (The value is specified when the printer is turned on for the first time.)

*2 The password is specified automatically when the printer is turned on for the first time.

Detect Same Printer Name

When the printer is detected during setup, plural printers with the same name may appear on the results screen.

Select a printer with checking the printer settings against those on detection result screen.

- **For Windows:**

  Check the printer's MAC address or serial to select the correct printer from the results.

- **For macOS:**

  The printer names appear with the MAC address added at the end or as the printer name specified by Bonjour.

  Check identifiers such as the MAC address, the printer name specified by Bonjour, and the printer's serial number to select the printer from among those that appear.

Note

- Serial number may not appear on result screen.

To check the printer's MAC address and the serial number, print out the network settings information.

Printing Network Settings

Note

- You can check the serial number by displaying on the LCD.

  System information

Connects to Another Computer via LAN/Changes from USB to LAN Connection

To connect an additional computer to the printer via LAN, or to change from USB to LAN connection, perform setup from the web page.

For Windows, you can perform setup using the Setup CD-ROM.

Printing Network Settings

Use the operation panel to print the printer's current network settings.

Important

- The network settings printout contains important information about your network. Handle it with care.

1. Check that printer is turned on.
2. Load three sheets of A4 or Letter-sized plain paper.
3. Press **Setup** button.

   The **Setup menu** screen appears.
4. Select **Device settings** and press **OK** button.
5. Select **LAN settings** and press **OK** button.
6. Select **Print LAN details** and press **OK** button.

   The printer starts printing the network setting information.

The following information on the printer's network setting is printed out. (Some setting values are not displayed depending on the printer settings.)

Item Number	Item	Description	Setting
1	Product Information	Product information	–
1-1	Product Name	Product name	XXXXXXXX
1-2	ROM Version	ROM version	XXXXXXXX
1-3	Serial Number	Serial number	XXXXXXXX
2	Network Diagnostics	Network diagnostics	—
2-1	Diagnostic Result	Diagnostic result	XXXXXXXX
2-2	Result Codes	Result codes	XXXXXXXX
2-3	Result Code Details	Result code details	http://canon.com/ijnwt
3	Wireless LAN	Wireless LAN	Enable/Disable
3-2	Infrastructure	Infrastructure	Enable/Disable
3-2-1	Signal Strength	Signal strength	0 to 100 [%]
3-2-2	Link Quality	Link quality	0 to 100 [%]

3-2-3	Frequency	Frequency	XX (GHz)
3-2-4	MAC Address	MAC address	XX:XX:XX:XX:XX:XX
3-2-5	Connection	Connection status	Active/Inactive
3-2-6	SSID	SSID	Wireless LAN network name (SSID)
3-2-7	Channel	Channel	XX (1 to 13)
3-2-8	Encryption	Encryption method	None/WEP/TKIP/AES
3-2-9	WEP Key Length	WEP key length (bits)	Inactive/128/64
3-2-10	Authentication	Authentication method	None/auto/open/shared/WPA-PSK/WPA2-PSK
3-2-11	TCP/IPv4	TCP/IPv4	Enable
3-2-12	IP Address	IP address	XXX.XXX.XXX.XXX
3-2-13	Subnet Mask	Subnet mask	XXX.XXX.XXX.XXX
3-2-14	Default Gateway	Default gateway	XXX.XXX.XXX.XXX
3-2-15	TCP/IPv6	TCP/IPv6	Enable/Disable
3-2-16	Link Local Address	Link local address	XXXX:XXXX:XXXX:XXXX XXXX:XXXX:XXXX:XXXX
3-2-17	Link Local Prefix Length	Link local prefix length	XXX
3-2-18	Stateless Address1	Stateless address 1	XXXX:XXXX:XXXX:XXXX XXXX:XXXX:XXXX:XXXX
3-2-19	Stateless Prefix Length1	Stateless prefix length 1	XXX
3-2-20	Stateless Address2	Stateless address 2	XXXX:XXXX:XXXX:XXXX XXXX:XXXX:XXXX:XXXX
3-2-21	Stateless Prefix Length2	Stateless prefix length 2	XXX
3-2-22	Stateless Address3	Stateless address 3	XXXX:XXXX:XXXX:XXXX XXXX:XXXX:XXXX:XXXX
3-2-23	Stateless Prefix Length3	Stateless prefix length 3	XXX
3-2-24	Stateless Address4	Stateless address 4	XXXX:XXXX:XXXX:XXXX XXXX:XXXX:XXXX:XXXX
3-2-25	Stateless Prefix Length4	Stateless prefix length 4	XXX

3-2-26	Default Gateway1	Default gateway 1	XXXX:XXXX:XXXX:XXXX XXXX:XXXX:XXXX:XXXX
3-2-27	Default Gateway2	Default gateway 2	XXXX:XXXX:XXXX:XXXX XXXX:XXXX:XXXX:XXXX
3-2-28	Default Gateway3	Default gateway 3	XXXX:XXXX:XXXX:XXXX XXXX:XXXX:XXXX:XXXX
3-2-29	Default Gateway4	Default gateway 4	XXXX:XXXX:XXXX:XXXX XXXX:XXXX:XXXX:XXXX
3-2-33	IPsec	IPsec setting	Active
3-2-34	Security Protocol	Security method	ESP/ESP & AH/AH
3-3	Wireless Direct	Operation mode for Wireless Direct	Enable/Disable
3-3-1	MAC Address	MAC address	XX:XX:XX:XX:XX:XX
3-3-2	Connection	Connection status	Active/Inactive
3-3-3	SSID	SSID	Wireless Direct network name (SSID)
3-3-4	Password	Password	Wireless Direct password (10 alphanumeric characters)
3-3-5	Channel	Channel	3
3-3-6	Encryption	Encryption method	AES
3-3-7	Authentication	Authentication method	WPA2-PSK
3-3-8	TCP/IPv4	TCP/IPv4	Enable
3-3-9	IP Address	IP address	XXX.XXX.XXX.XXX
3-3-10	Subnet Mask	Subnet mask	XXX.XXX.XXX.XXX
3-3-11	Default Gateway	Default gateway	XXX.XXX.XXX.XXX
3-3-12	TCP/IPv6	TCP/IPv6	Enable/Disable
3-3-13	Link Local Address	Link local address	XXXX:XXXX:XXXX:XXXX XXXX:XXXX:XXXX:XXXX
3-3-14	Link Local Prefix Length	Link local prefix length	XXX
3-3-15	IPsec	IPsec setting	Active
3-3-16	Security Protocol	Security method	–
4	Wired LAN	Wired LAN	Enable/Disable

4-1	MAC Address	MAC address	XX:XX:XX:XX:XX:XX
4-2	Connection	Wired LAN status	Active/Inactive
4-3	TCP/IPv4	TCP/IPv4	Enable
4-4	IP Address	IP address	XXX.XXX.XXX.XXX
4-5	Subnet Mask	Subnet mask	XXX.XXX.XXX.XXX
4-6	Default Gateway	Default gateway	XXX.XXX.XXX.XXX
4-7	TCP/IPv6	TCP/IPv6	Enable/Disable
4-8	Link Local Address	Link local address	XXXX:XXXX:XXXX:XXXX XXXX:XXXX:XXXX:XXXX
4-9	Link Local Prefix Length	Link local prefix length	XXX
4-10	Stateless Address1	Stateless address 1	XXXX:XXXX:XXXX:XXXX XXXX:XXXX:XXXX:XXXX
4-11	Stateless Prefix Length1	Stateless prefix length 1	XXX
4-12	Stateless Address2	Stateless address 2	XXXX:XXXX:XXXX:XXXX XXXX:XXXX:XXXX:XXXX
4-13	Stateless Prefix Length2	Stateless prefix length 2	XXX
4-14	Stateless Address3	Stateless address 3	XXXX:XXXX:XXXX:XXXX XXXX:XXXX:XXXX:XXXX
4-15	Stateless Prefix Length3	Stateless prefix length 3	XXX
4-16	Stateless Address4	Stateless address 4	XXXX:XXXX:XXXX:XXXX XXXX:XXXX:XXXX:XXXX
4-17	Stateless Prefix Length4	Stateless prefix length 4	XXX
4-18	Default Gateway1	Default gateway 1	XXXX:XXXX:XXXX:XXXX XXXX:XXXX:XXXX:XXXX
4-19	Default Gateway2	Default gateway 2	XXXX:XXXX:XXXX:XXXX XXXX:XXXX:XXXX:XXXX
4-20	Default Gateway3	Default gateway 3	XXXX:XXXX:XXXX:XXXX XXXX:XXXX:XXXX:XXXX

4-21	Default Gateway4	Default gateway 4	XXXX:XXXX:XXXX:XXXX XXXX:XXXX:XXXX:XXXX
4-25	IPsec	IPsec setting	Active
4-26	Security Protocol	Security method	ESP/ESP & AH/AH
4-27	Wired LAN DRX	Discontinuous reception (wired LAN)	Enable/Disable
5	Other Settings	Other settings	–
5-1	Printer Name	Printer name	Printer name (Up to 15 alphanumeric characters)
5-2	Wireless Direct Dev-Name	Device name for wireless direct	Device name for wireless direct (Up to 32 alphanumeric characters)
5-4	WSD Printing	WSD printing setting	Enable/Disable
5-5	WSD Timeout	Timeout	1/5/10/15/20 [min]
5-6	LPD Printing	LPD printing setting	Enable/Disable
5-7	RAW Printing	RAW printing setting	Enable/Disable
5-9	Bonjour	Bonjour setting	Enable/Disable
5-10	Bonjour Service Name	Bonjour service name	Bonjour service name (Up to 52 alphanumeric characters)
5-11	LLMNR	LLMNR setting	Enable/Disable
5-12	SNMP	SNMP setting	Enable/Disable
5-13	PictBridge Commun.	PictBridge Communication	Enable/Disable
5-14	DNS Server	Obtain DNS server address automatically	Auto/Manual
5-15	Primary Server	Primary server address	XXX.XXX.XXX.XXX
5-16	Secondary Server	Secondary server address	XXX.XXX.XXX.XXX
5-17	Proxy Server	Proxy server setting	Enable/Disable
5-18	Proxy Address	Proxy address	XXXXXXXXXXXXXXXXXXXX
5-19	Proxy Port	Proxy port specification	1 to 65535
5-20	Cert. Fingerprt(SHA-1)	Certificate fingerprint(SHA-1)	xxxxxxxx xxxxxxxx xxxxxxxx xxxxxxxx xxxxxxxx
5-21	Cert. Fingerprt(SHA-256)	Certificate fingerprint(SHA-256)	xxxxxxxx xxxxxxxx xxxxxxxx xxxxxxxx xxxxxxxx xxxxxxxx xxxxxxxx xxxxxxxx

6	Bluetooth	Bluetooth settings	—
6-1	Bluetooth Setting	Bluetooth	Enable/Disable
6-3	Bluetooth Device Address	Bluetooth device address of the printer	XXXXXXXX
6-5	Bluetooth Device Name	Bluetooth device name of the printer	XXXXXXXX
7	Printer Log Service	Printer log service	—
7-1	Unsent Usage Logs	Number of unsent usage logs	0 to 200
7-2	Usage Log Last Sent	Last date when usage log was sent	XXXXXXXX
7-3	Point Service	Registration status	Active/Awaiting Activation/No Active Service

("XX" represents alphanumeric characters.)

Reconfiguration Method of LAN Connection/Reconfiguration Method of Wi-Fi Connection

- Reconfiguration Method of LAN Connection
- Reconfiguration Method of Wi-Fi Connection

Reconfiguration Method of LAN Connection

Follow either procedure below to change LAN connection method (wired or Wi-Fi).

- **For Windows:**
  - Redo setup using the Setup CD-ROM or from the web page.
  - Enable Wi-Fi or wired LAN on the operation panel of the printer. After that, perform settings on the **Network Settings** screen on IJ Network Device Setup Utility.

    For details, refer to Performing/Changing Wi-Fi Settings or Performing/Changing Wired LAN Connection (Ethernet Cable) Settings.

- **For macOS:**
  - Redo setup from the web page.

Reconfiguration Method of Wi-Fi Connection

Follow either procedure below to change Wi-Fi connection method (infrastructure or Wireless Direct).

- **For Windows:**
  - Redo setup using the Setup CD-ROM or from the web page.
  - Perform settings on the **Network Settings** screen on IJ Network Device Setup Utility.

    Important

    - Before you perform settings using IJ Network Device Setup Utility, turn on Easy wireless connect mode on the printer following the procedure below.

      1. Check that printer is turned on.
      2. Press and hold **Wireless connect** button for 3 seconds.

         LCD and Operation Panel
      3. Perform operations following instructions on your smartphone or tablet.
      4. If message saying setup is completed appears, press **OK** button.

- **For macOS:**

  Redo setup from the web page.

IJ Network Device Setup Utility (Windows)

- IJ Network Device Setup Utility
- Starting Up IJ Network Device Setup Utility
- Diagnosing and Repairing Network Settings
- Performing/Changing Network Settings
- List of Models Which Does Not Support Diagnosis and Repair Function
- List of Models Which Does Not Support IPv6 Configuration via USB Connection

IJ Network Device Setup Utility

IJ Network Device Setup Utility allows you to diagnose or repair the network status, and to perform printer settings on network.

Use IJ Network Device Setup Utility for:

- Searching printers on network and performing initial network setup for detected printers
- Performing initial network setup by connecting the printer and computer using a USB cable (Not available for some models)
- Changing printer network settings
- Diagnosing the settings of the printer and those of computer on which IJ Network Device Setup Utility is installed if anything is wrong with connection. In addition, IJ Network Device Setup Utility repairs the status of the printer and computer (Not available for some models).

Important

- Depending on the printer you are using, an administrator password is already specified for the printer at the time of purchase. When you change the network settings, authentication by the administrator password is required.

  For details:

  Administrator Password

  For improving security, we recommend to change the administrator password.

  Change Administrator Password

- To use the printer over LAN, make sure you have the equipment necessary for the connection type, such as a wireless router or a LAN cable.
- When you install IJ Network Device Setup Utility, disable block function of firewall.
- Do not change network settings using IJ Network Device Setup Utility while printing is in progress.

Starting Up IJ Network Device Setup Utility

Start up IJ Network Device Setup Utility as shown below.

- In Windows 10, select **Start** > (**All apps** >) > **Canon Utilities** > **IJ Network Device Setup Utility**.
- In Windows 8.1 or Windows 8, select **IJ Network Device Setup Utility** on the **Start** screen to start IJ Network Device Setup Utility. If **IJ Network Device Setup Utility** is not displayed on the **Start** screen, select the **Search** charm and search for "IJ Network Device Setup Utility".
- In Windows 7 or Windows Vista, click **Start** and select **All Programs**, **Canon Utilities**, **IJ Network Device Setup Utility**, and then **IJ Network Device Setup Utility**.

When you start up IJ Network Device Setup Utility, a message appears. Check the message and select **Yes**. The screen below appears.

Select **Diagnose and Repair** or **Printer Network Setup** on the displayed screen.

- If you select **Diagnose and Repair**:

  Diagnosing and Repairing Network Settings

- If you select **Printer Network Setup**:

  Performing/Changing Network Settings

Diagnosing and Repairing Network Settings

IJ Network Device Setup Utility diagnoses and repairs computer settings or connection between the computer and printer when a problem (e.g. cannot print from a printer on the network) occurs.

Important

- Some models do not support diagnosis and repair function.

  For details:

  List of Models Which Does Not Support Diagnosis and Repair Function

Follow the procedure below.

1. Start up IJ Network Device Setup Utility.

2. Check the displayed message and select **Yes**.

3. Select **Diagnose and Repair** on the displayed screen.

   Perform operations following the instructions on the screen.

   Note

   - This function checks the following items:
     - whether the computer is connected to the router
     - whether a web page on the Internet can be viewed
     - whether the printer can be detected on the network
     - whether the signal strength or communication level is sufficient (when using Wi-Fi)
     - whether the printer port setting matches with the network setting

Performing/Changing Network Settings

- Canon IJ Network Device Setup Utility Screen
- Performing Network Settings

Canon IJ Network Device Setup Utility Screen

- Items on Canon IJ Network Device Setup Utility Screen
- Menus on Canon IJ Network Device Setup Utility Screen
- Items on Canon IJ Network Device Setup Utility Screen Toolbar

Items on Canon IJ Network Device Setup Utility Screen

The screen below appears when you start up IJ Network Device Setup Utility and select **Printer Network Setup**. Detected printers are listed on the screen and the items below are shown.

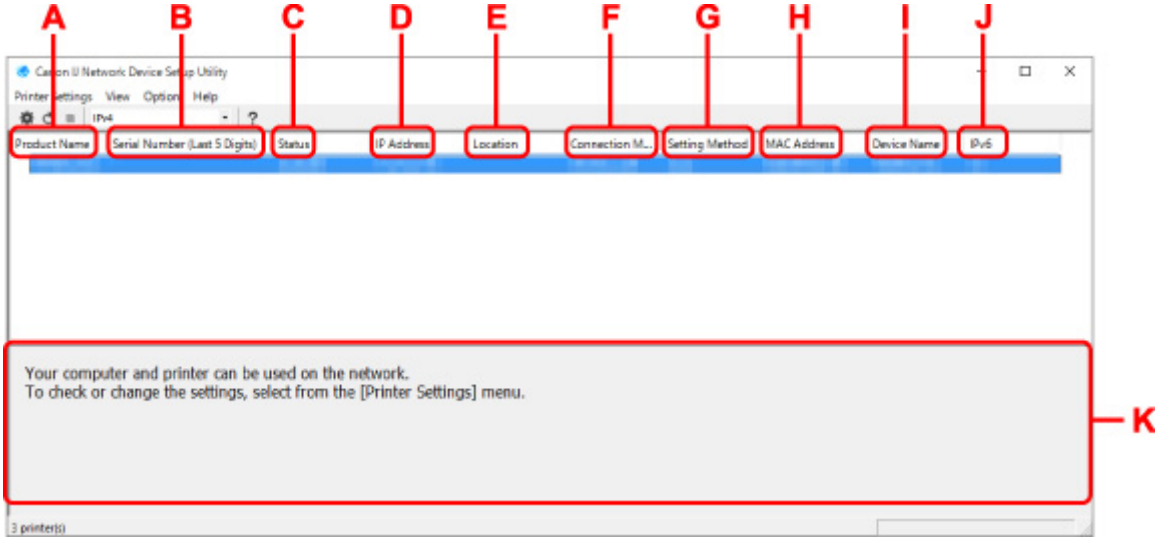

A: Product Name

Displays the product name of detected printer. The icon below appears on the left if the printer cannot be used.

: Appears when the printer requires setup or has not been configured.

: Appears when the IP address is duplicated to another printer.

: Appears when you cannot communicate with the printer.

Note

- If a printer you want to use is not detected, try to set the criteria for printer search.

  Setting Criteria for Printer Search/Searching Specific Printer

- Right-clicking a printer displays setting items or items to confirm.

B: Serial Number (Last 5 Digits)

Displays the last five digits of printer's serial number.

C: Status

Displays the printer status as shown below.

- **Available**

  Indicates the printer is available.

- **Setup Completed**

Appears after performing network setup and clicking **Set** to close the window.

- **Requires Setup**

  Indicates the printer is required to perform Wi-Fi setup.

  Performing/Changing Wi-Fi Settings

- **Not Set**

  Indicates the printer cannot be used on network, or IPv6 is disabled. Specify an IP address or enable IPv6 on **Network Settings...**.

  Performing/Changing Wi-Fi Settings

- **IP Address Overlap**

  Indicates the IP address is duplicated to another printer.

- **Unknown**

  Indicates the printer recognized as **Available** in the past cannot be used currently.

Note

- If **USB** is selected from the pulldown menu on the toolbar, nothing is displayed.

D: IP Address

Displays the printer IP address. Nothing is displayed if the printer status is **Requires Setup**.

Note

- If **USB** is selected from the pulldown menu on the toolbar, "-" is displayed.

E: Location

Displays the printer location if it is registered. Nothing is displayed if the printer status is **Requires Setup**.

Note

- If **USB** is selected from the pulldown menu on the toolbar, nothing is displayed.

Assigning Printer Information

F: Connection Method

Displays printer connection method (wired LAN, Wi-Fi, or USB).

Note

- If **USB** is selected from the pulldown menu on the toolbar, **USB** is displayed.
- If the printer supports both of the LAN connection methods, the printer is recognized as two printers and they are displayed separately. (The same numbers are displayed on **Serial Number (Last 5 Digits)**.)
- If the printer does not support wired LAN, wired LAN is not displayed.
- If you are using IJ Network Device Setup Utility on the computer which does not support Wi-Fi, Wi-Fi is not displayed.

G: Setting Method

Displays printer setting method.

- **Auto**

Appears if the printer is used by IP address specified automatically.

- **Manual**

  Appears if the printer is used by IP address specified manually.

Note

- If **USB** is selected from the pulldown menu on the toolbar, "-" is displayed.

H: MAC Address

Displays the MAC address of the detected printer.

Note

- If **USB** is selected from the pulldown menu on the toolbar, "-" is displayed.

I: Device Name

Displays the printer device name if it is registered.

Note

- If **USB** is selected from the pulldown menu on the toolbar, nothing is displayed.
- The printer with **Requires Setup** displayed on **Status** is not displayed.

Assigning Printer Information

J: IPv6

On appears when an IPv6 address is assigned for the printer.

Note

- If **USB** is selected from the pulldown menu on the toolbar, "-" is displayed.

K: Displays the printer status and operation guides.

Selecting a printer from the printer list displays its current status and what to do next.

Menus on Canon IJ Network Device Setup Utility Screen

This section describes menus on **Canon IJ Network Device Setup Utility** screen.

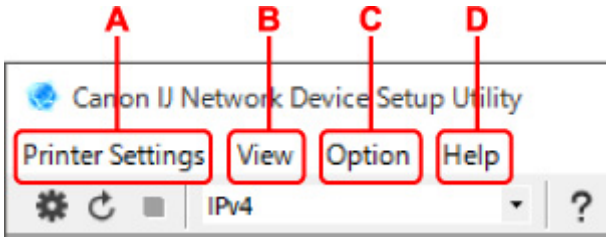

A: Printer Settings menu

Printer Settings Menu

B: View menu

View Menu

C: Option menu

Option Menu

D: Help menu

- Help Menu

Items on Canon IJ Network Device Setup Utility Screen Toolbar

This section describes items on **Canon IJ Network Device Setup Utility** Screen toolbar.

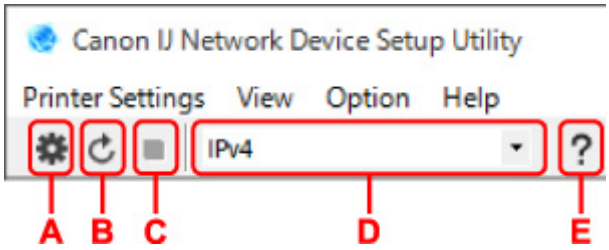

A: Perform wired or Wi-Fi setup.

Note

- This item has the same function as **Network Settings...** in the **Printer Settings** menu.

B: Redetects printers.

Note

- This item has the same function as **Update** in the **View** menu.

C: Stops detecting printers.

Note

- This item has the same function as **Cancel** in the **View** menu.

D: Switches the printer list. (IPv4, IPv6, or USB printers)

Note

- This item has the same function as **Switch View** in the **View** menu.
- You can also display the USB connected printer list. (Not available for some models.) In this case, select **USB**.

E: Displays this guide.

Note

- This item has the same function as **Online Manual** in the **Help** menu.

Performing Network Settings

- Performing/Changing Wired LAN Connection (Ethernet Cable) Settings
- Performing/Changing Wi-Fi Settings
- Assigning Printer Information

Performing/Changing Wired LAN Connection (Ethernet Cable) Settings

Follow the procedure below to perform/change wired LAN settings.

Note

- For some models, you can perform network setup for a USB connected printer using IJ Network Device Setup Utility. Select **USB** on **Switch View** under the **View** menu to display printers for which you can perform setup.

1. Start up IJ Network Device Setup Utility.

2. Check the displayed message and select **Yes**.

3. Select **Printer Network Setup** on the displayed screen.

   Detected printers are listed.

4. Select printer to perform/change settings from printer list.

   Select the printer with **Wired LAN** displayed on **Connection Method** and **Available** displayed on **Status** to perform settings.

   You can perform settings for a printer with **Available** not displayed on **Status** via USB connection.

   To perform setup for a USB connected printer, select **USB** from the pulldown menu on the toolbar and select the printer to perform/change settings.

5. Select **Network Settings...** on **Printer Settings** menu.

   The **Confirm Printer Password** screen appears.

   For more on the password, refer to Administrator Password.

   Note

   - Clicking the ⚙ icon allows you to perform/change settings.
   - If you select a USB connected printer on step 4, the screen below appears after the **Confirm Printer Password** screen appears

   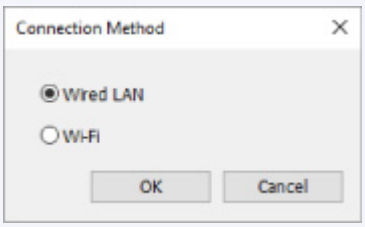

   Select **Wired LAN** and click **OK**.

6. Enter password and click **OK**.

   The **Network Settings** screen appears.

7. Perform/change settings.

You can switch the screen between IPv4 and IPv6. Click the tab to switch the protocol.

- IPv4 settings

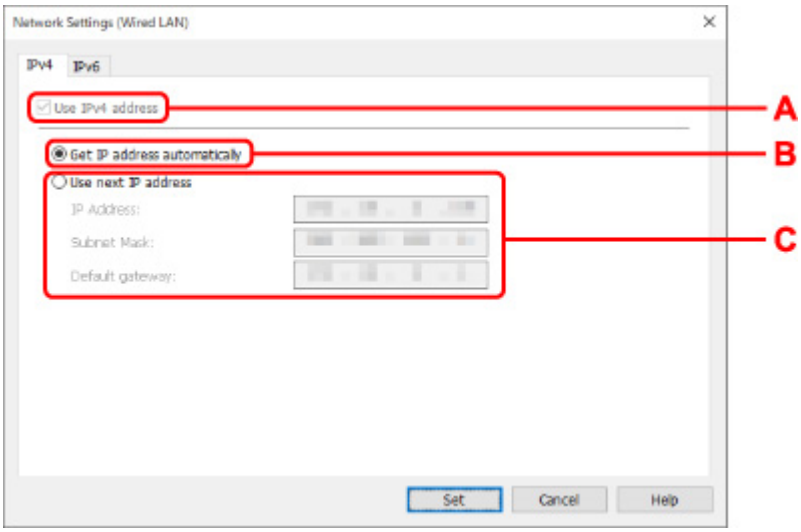

A: Use IPv4 address

Always selected. (displayed in a gray out state)

B: Get IP address automatically

Select this option to use an IP address automatically assigned by a DHCP server. DHCP server functionality must be enabled on your router.

C: Use next IP address

Select this option if no DHCP server functionality is available in your setup where you use the printer, or you want to use a fixed IP address.

Enter the IP address, subnet mask, and default gateway.

- IPv6 settings

Note

- If you select a USB connected printer on step 4, you cannot perform IPv6 settings depending on the printer you are using.

  For details, see List of Models Which Does Not Support IPv6 Configuration via USB Connection.

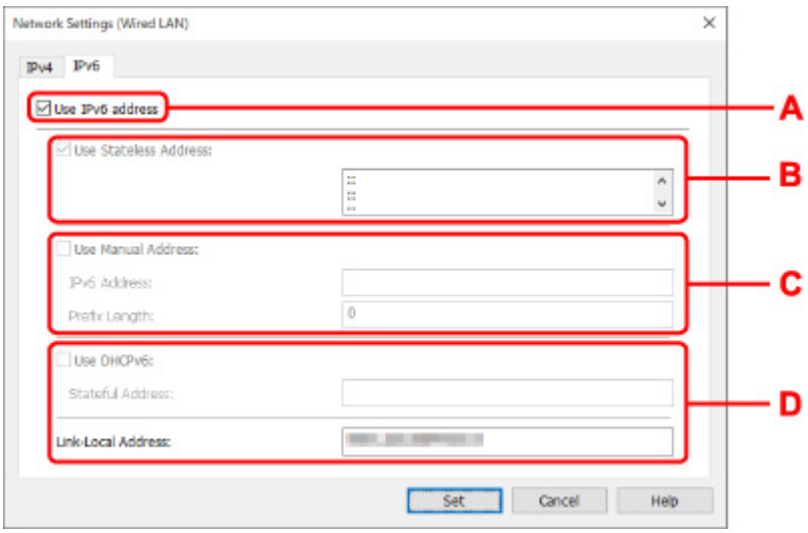

A: Use IPv6 address

Select when you use the printer with IPv6 environment.

B: Use Stateless Address:

Select when you use an IP address assigned automatically. Use a router compatible with IPv6.

Note

- This setting item is not available depending on the printer you are using.

C: Use Manual Address:

Select this option if no DHCP server functionality is available in your setup where you use the printer, or you want to use a fixed IP address.

Enter the IP address and IP address prefix length.

Note

- This setting item is not available depending on the printer you are using.

D: Use DHCPv6:

Select when you obtain an IP address using DHCPv6.

Note

- This setting item is not available depending on the printer you are using.

8. Click **Set**.

Performing/Changing Wi-Fi Settings

Follow the procedure below to perform/change Wi-Fi settings.

Important

- Enable Easy wireless connect (Cableless setup) before performing printer setup. (Not required if you change the IP address.) For details, search for "NR049" on your printer's online manual and see the page shown.
- If you use a printer over the Wi-Fi, we highly recommend you perform security settings for Wi-Fi network using WPA/WPA2 from the viewpoint of security.

Note

- For some models, you can perform network setup for a USB connected printer using IJ Network Device Setup Utility. Select **USB** on **Switch View** under the **View** menu to display printers.

1. Start up IJ Network Device Setup Utility.

2. Check the displayed message and select **Yes**.

3. Select **Printer Network Setup** on the displayed screen.

   Detected printers are listed.

4. Select printer to perform/change settings from printer list.

   Select the printer with **Wi-Fi** displayed on **Connection Method** and **Available** or **Requires Setup** displayed on **Status** to perform settings.

   You can perform settings for a printer with **Available** or **Requires Setup** not displayed on **Status** via USB connection.

   To perform setup for a USB connected printer, select **USB** from the pulldown menu on the toolbar and select the printer to perform/change settings.

5. Select **Network Settings...** on **Printer Settings** menu.

   The **Confirm Printer Password** screen appears.

   For more on the password, refer to Administrator Password.

   ### Note

   - Clicking the ⚙ icon allows you to perform/change settings.
   - If you select a USB connected printer on step 4 and the selected printer is compatible with wired LAN, the screen below appears after the **Confirm Printer Password** screen appears

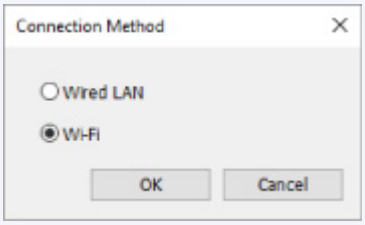

Select **Wi-Fi** and click **OK**.

6. Enter password and click **OK**.

   The **Network Settings** screen appears.

7. Perform/change settings.

   You can switch the screen between IPv4 and IPv6. Click the tab to switch the protocol.

   - IPv4/IPv6 settings

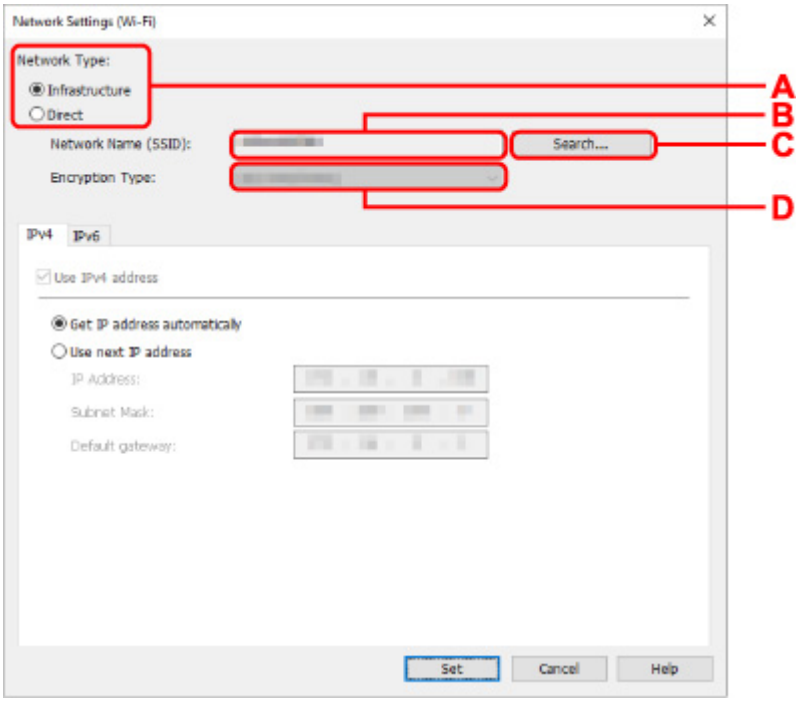

A: Network Type:

Select the Wi-Fi mode.

- **Infrastructure**

  Connects the printer to the Wi-Fi with a wireless router.

- **Direct**

  Connects the printer to wireless communication devices (smartphone or tablet) without a wireless router.

Note

- If Wi-Fi is enabled on the computer and if you select a USB connected printer on step 4, you can select **Direct** depending on the printer you are using.
- If **Direct** is selected, all items are displayed in a gray out status and you cannot perform any settings.

  In addition, you cannot connect to Internet from your computer depending on your operating environment.

B: Network Name (SSID):

The network name (SSID) of the Wi-Fi currently used is displayed.

The network name (SSID) for Wireless Direct appears while in Wireless Direct.

C: Search...

The **Detected Wireless Routers** screen is displayed to select a wireless router to connect to. For a wireless router already connected to the computer, **Available** is displayed on **Communication Status**.

If you select a wireless router with **Not Connected** on **Communication Status** from the list, clicking **Set** displays the WPA/WPA2 or WEP setting screen for a wireless router.

- If WEP Details Screen Appears
- If WPA/WPA2 Details Screen Appears

D: Encryption Type:

Displays the encryption method used over the Wi-Fi.

- IPv4 settings

Note

- The setting items below are available only when **Infrastructure** is selected for **Network Type:**.

  If **Direct** is selected, all items are displayed in a gray out status and you cannot perform any settings.

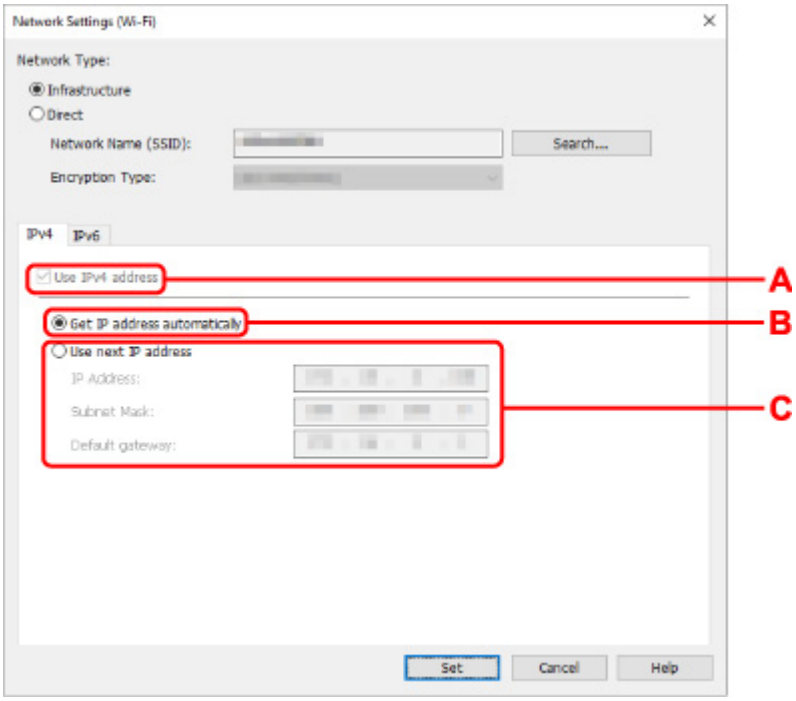

A: Use IPv4 address

Always selected. (displayed in a gray out state)

B: Get IP address automatically

Select this option to use an IP address automatically assigned by a DHCP server. DHCP server functionality must be enabled on your wireless router.

C: Use next IP address

Select this option if no DHCP server functionality is available in your setup where you use the printer, or you want to use a fixed IP address.

Enter the IP address, subnet mask, and default gateway.

- IPv6 settings

Note

- If you select a USB connected printer on step 4, you cannot perform IPv6 settings depending on the printer you are using.

  For details, see List of Models Which Does Not Support IPv6 Configuration via USB Connection.

- The setting items below are available only when **Infrastructure** is selected for **Network Type:**.

  If **Direct** is selected, all items are displayed in a gray out status and you cannot perform any settings.

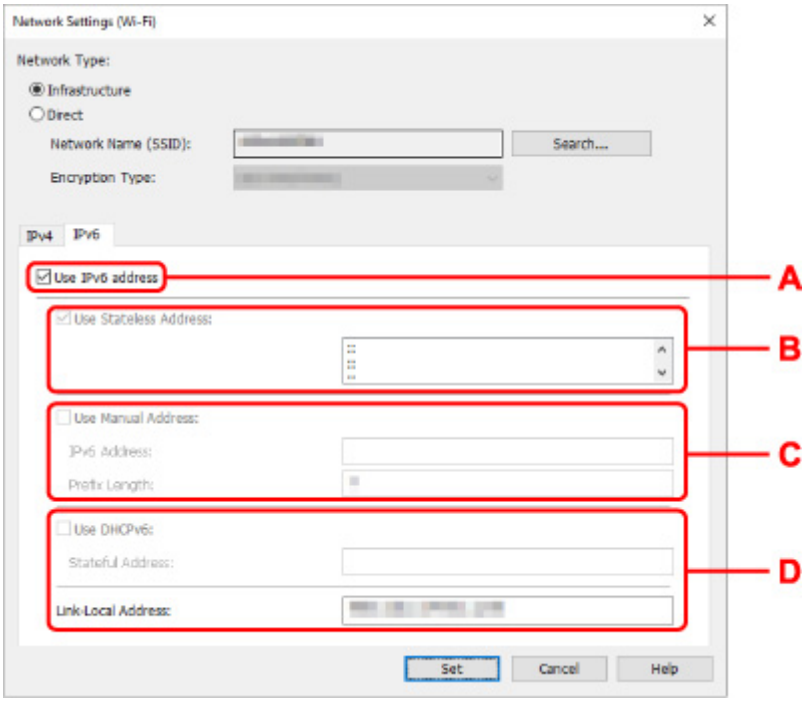

A: Use IPv6 address

Select when you use the printer with IPv6 environment.

B: Use Stateless Address:

Select when you use an IP address assigned automatically. Use a router compatible with IPv6.

Note

- This setting item is not available depending on the printer you are using.

C: Use Manual Address:

Select this option if no DHCP server functionality is available in your setup where you use the printer, or you want to use a fixed IP address.

Enter the IP address and IP address prefix length.

Note

- This setting item is not available depending on the printer you are using.

D: Use DHCPv6:

Select when you obtain an IP address using DHCPv6.

Note

- This setting item is not available depending on the printer you are using.

8. Click **Set**.

Assigning Printer Information

Follow the procedure below to assign/change printer location name or device name.

The names appear on **Device Name:** and **Location:** on the **Canon IJ Network Device Setup Utility** screen.

Note

- If **USB** is selected from the pulldown menu on the toolbar, this setting item is not available.

1. Start up IJ Network Device Setup Utility.

2. Check the displayed message and select **Yes**.

3. Select **Printer Network Setup** on the displayed screen.

   Detected printers are listed.

4. Select printer to assign location name and device name.

   Select the printer with **Available** displayed on **Status**.

5. Select **Detailed Printer Settings...** on **Printer Settings** menu.

   The **Confirm Printer Password** screen appears.

   For more on the password, refer to Administrator Password.

6. Enter password and click **OK**.

   The **Detailed Printer Settings** screen appears.

7. Perform/change settings.

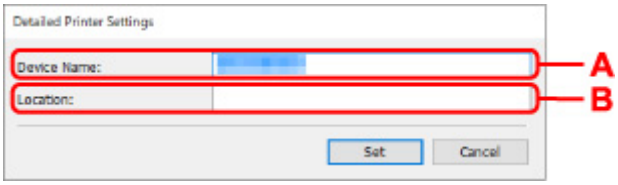

   The setting items below are available.

   A: Device Name:
   Assigns the device name.

   B: Location:
   Assigns the location name.

8. Click **Set**.

List of Models Which Does Not Support Diagnosis and Repair Function

The following models does not support "Diagnose and Repair" function of IJ Network Device Setup Utility.

- G4000 series
- PRO-500 series
- PRO-1000 series
- MB2100 series
- MB2700 series
- MB5100 series
- MB5400 series
- iB4000 series
- PRO-520
- PRO-540
- PRO-540S
- PRO-560
- PRO-560S
- PRO-2000
- PRO-4000
- PRO-4000S
- PRO-6000
- PRO-6000S
- TS9000 series
- TS8000 series
- TS6000 series
- TS5000 series
- MG3000 series
- E470 series

List of Models Which Does Not Support IPv6 Configuration via USB Connection

For the following models, you can perform settings only for IPv4 using IJ Network Device Setup Utility. (You cannot perform settings for IPv6.)

- iB4100 series
- MG3000 series
- E470 series
- G4000 series
- TS5000 series
- TS6000 series
- TS8000 series
- TS9000 series
- TR8500 series
- TR7500 series
- TS9100 series
- TS8100 series
- TS6100 series
- TS5100 series
- TS3100 series
- E3100 series
- TS300 series
- E300 series
- TR8580 series
- TS9180 series
- TS8180 series
- TS6180 series
- TR8530 series
- TR7530 series
- TS8130 series
- TS6130 series
- XK70 series
- XK50 series
- G4010 series
- G3010 series
- TR4500 series
- E4200 series
- TS6200 series
- TS6280 series
- TS6230 series
- TS8200 series
- XK80 series
- TS8280 series
- TS8230 series
- TS9500 series
- TS9580 series

- TR9530 series

Handling Paper, Ink Tanks, Multi-purpose Tray, etc.

- Loading Paper
- Placing Multi-purpose Tray
- Replacing Ink Tanks

Loading Paper

- Paper Sources
- Loading Paper in the Rear Tray
- Loading Paper in the Cassette
- Loading Envelopes in Rear Tray

Paper Sources

The printer has two paper sources for feeding paper, the rear tray (A) and cassette (B).

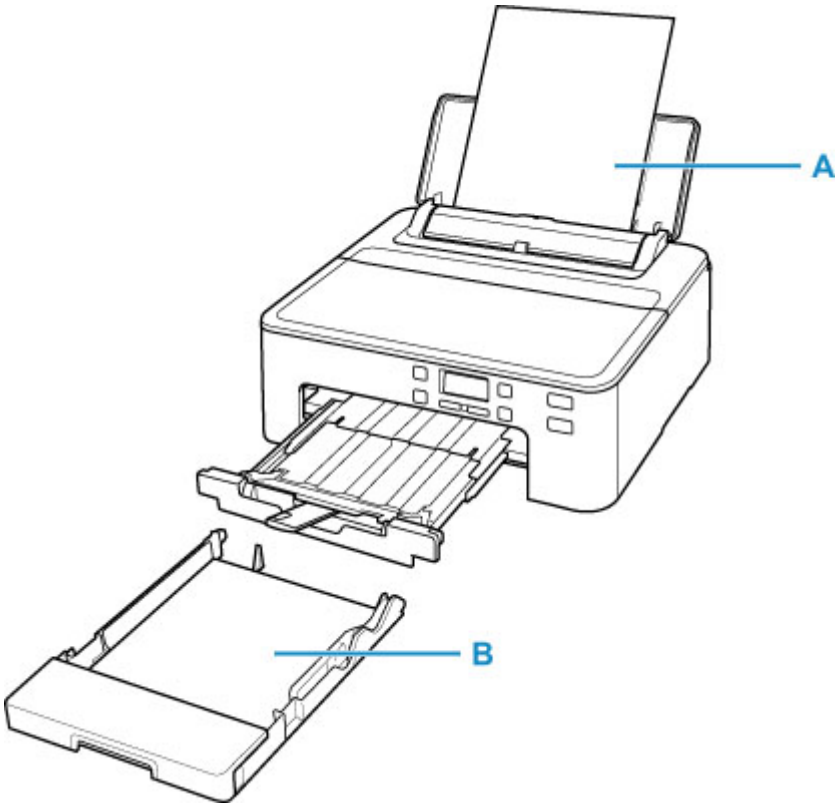

You can load all supported paper on the rear tray.

- Supported Media Types

You can load A4, B5, A5, or Letter-sized plain paper in the cassette.

Note

- When printing, select the correct page size and media type. If you select the wrong page size or media type, the printer may feed paper from the wrong paper source or may not print with the proper print quality.

  For details on how to load paper in each paper source, see below.

  - Loading Paper in the Rear Tray
  - Loading Paper in the Cassette
  - Loading Envelopes in Rear Tray

Loading Paper in the Rear Tray

You can load plain paper or photo paper.

You can also load envelopes on the rear tray.

Loading Envelopes in Rear Tray

Important

- If you cut plain paper to a size of 5" x 7" (13 x 18 cm) or smaller to perform a trial print, it may cause a paper jam.

Note

- We recommend Canon genuine photo paper for printing photos.

  For details on the Canon genuine paper, see Supported Media Types.
- You can use general copy paper or Canon Red Label Superior WOP111/Canon Océ Office Colour Paper SAT213.

  For the page size and paper weight you can use for this printer, see Supported Media Types.

1. Prepare paper.

Align the edges of paper. If paper is curled, flatten it.

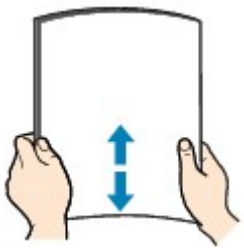

Note

- Align the edges of paper neatly before loading. Loading paper without aligning the edges may cause paper jams.
- If paper is curled, hold the curled corners and gently bend them in the opposite direction until the paper becomes completely flat.

  For details on how to flatten curled paper, see Check3 in Paper Is Smudged / Printed Surface Is Scratched.
- When using Photo Paper Plus Semi-gloss SG-201, even if the sheet is curled, load one sheet at a time as it is. If you roll up this paper to flatten, this may cause cracks on the surface of the paper and reduce the print quality.

2. Open paper support (A) and pull out paper support extension (B).

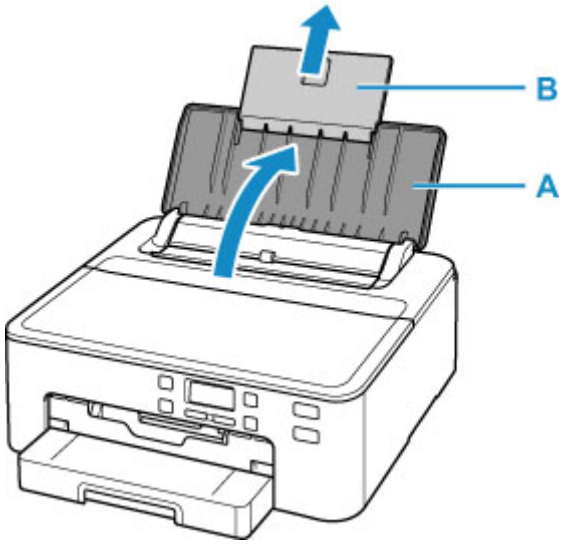

3. Open the feed slot cover (C).

4. Slide right paper guide (D) to open both paper guides.

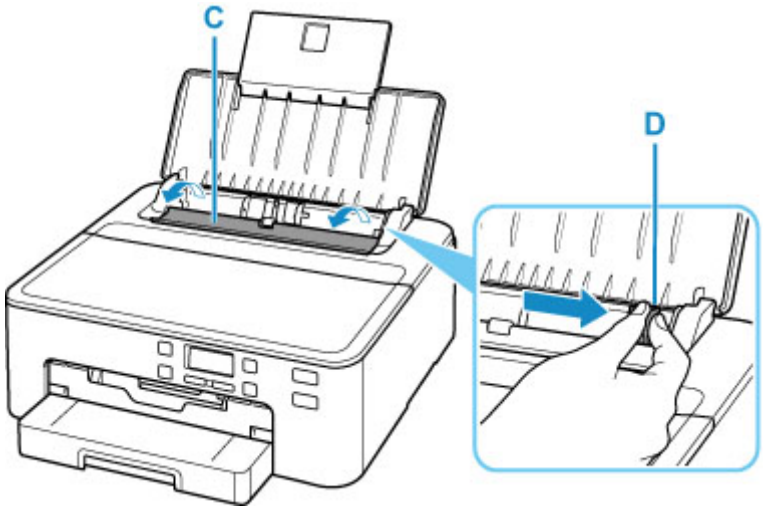

5. Load paper stack in portrait orientation WITH PRINT SIDE FACING UP.

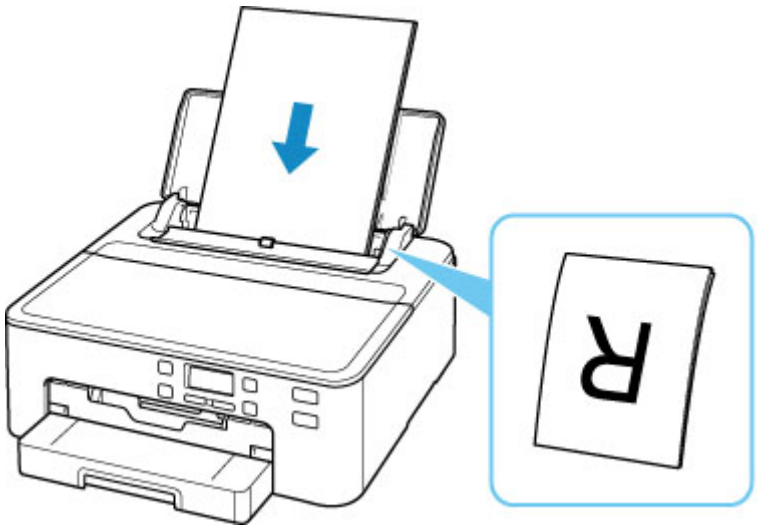

6. Slide right paper guide (D) to align with both sides of paper stack.

Do not slide the paper guides too hard against the paper. The paper may not be fed properly.

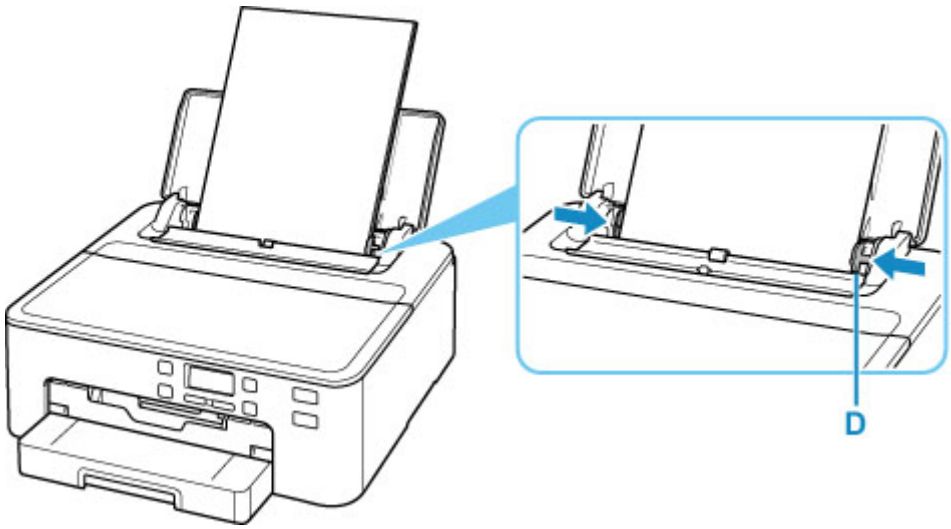

Important

- Always load paper in portrait orientation (E). Loading paper in landscape orientation (F) can cause paper jams.

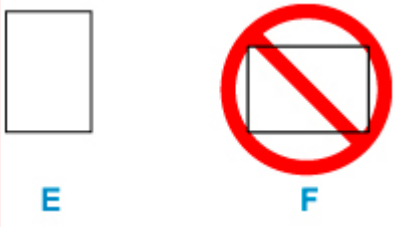

Note

- Do not load sheets of paper higher than the load limit mark (G).

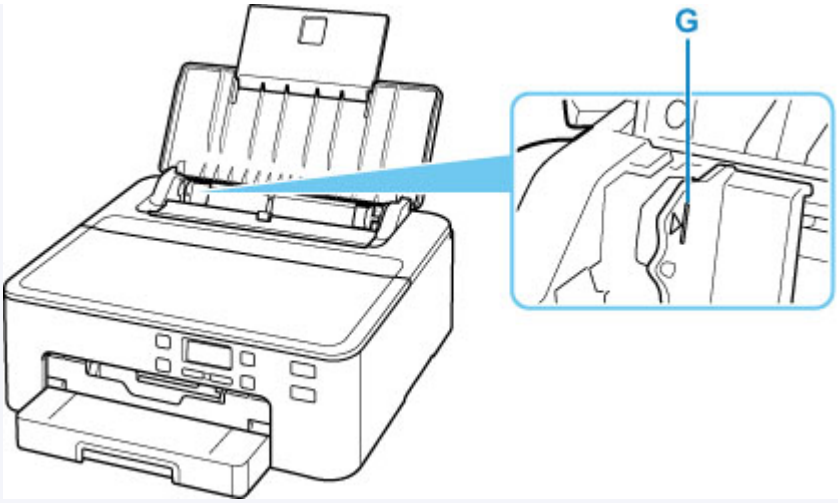

7. Close feed slot cover (C) gently.

Important

- If the feed slot cover is open, paper cannot be fed. Be sure to close the feed slot cover.

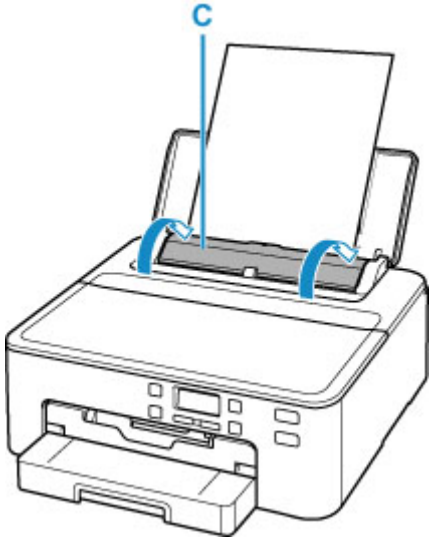

After closing the feed slot cover, the paper information registration screen for the rear tray appears on the LCD.

8. Press the **OK** button.

```
Save the rear tray paper
[OK]Next
```

9. Use the ◄ ► button to select the size of the loaded paper on the rear tray, then press the **OK** button.

```
Size:  ◄ *A4 ►
Type:    *Plain paper
```

Note

- The * (asterisk) on the LCD indicates the current setting.

10. Use the ◄ ► button to select the type of the loaded paper on the rear tray, then press the **OK** button.

Follow the instructions of any messages displayed to register the paper information.

11. Pull out paper output tray (H) and extend paper output support (I).

Be sure to pull out the paper output tray before printing. If not, printing will not start.

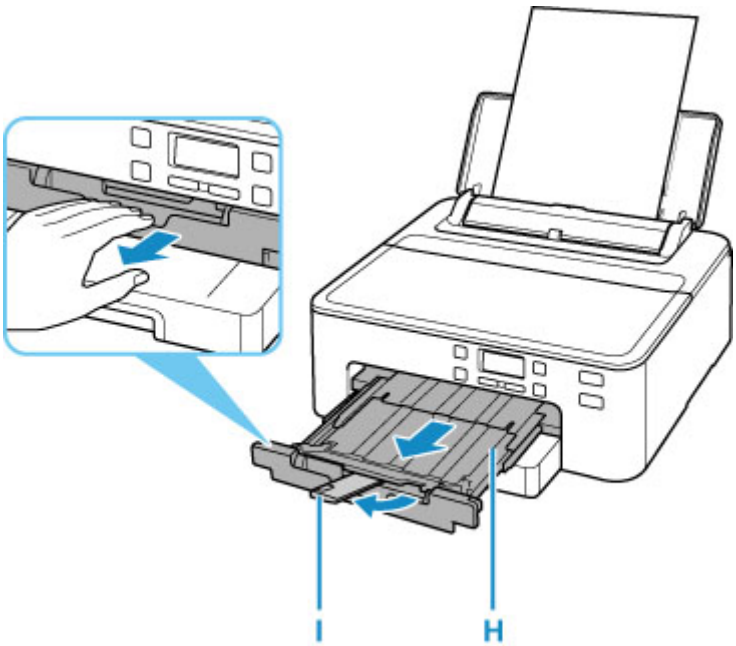

Note

- There are various types of paper, such as paper with a special surface coating for printing photos at optimal quality and paper suitable for documents. Each media type has specific preset settings (how ink is used and sprayed, distance from nozzles, etc.), that allow you to print to that type with optimal image quality. The wrong paper settings may cause poor printout color quality or scratches on the printed surface. If you notice blurring or uneven colors, increase the print quality setting and try printing again.
- To prevent incorrect printing, this printer has a function that detects whether the settings for the paper loaded on the rear tray matches the paper settings. Before printing, make print settings in accordance with the paper settings. When this function is enabled, an error message is displayed if these settings do not match to prevent incorrect printing. When this error message is displayed, check and correct the paper settings.

Loading Paper in the Cassette

You can load A4, B5, A5, or Letter-sized plain paper in the cassette.

Note

- In the cassette, be sure to load only plain paper.
- You can use general copy paper or Canon Red Label Superior WOP111/Canon Océ Office Colour Paper SAT213.

  For the page size and paper weight you can use for this printer, see Supported Media Types.

1. Prepare paper.

   Align the edges of paper. If paper is curled, flatten it.

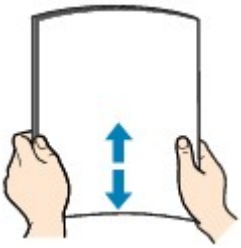

   Note

   - Align the edges of paper neatly before loading. Loading paper without aligning the edges may cause paper jams.
   - If paper is curled, hold the curled corners and gently bend them in the opposite direction until the paper becomes completely flat.

     For details on how to flatten curled paper, see Check3 in Paper Is Smudged / Printed Surface Is Scratched.

2. Pull out the cassette (A) from the printer.

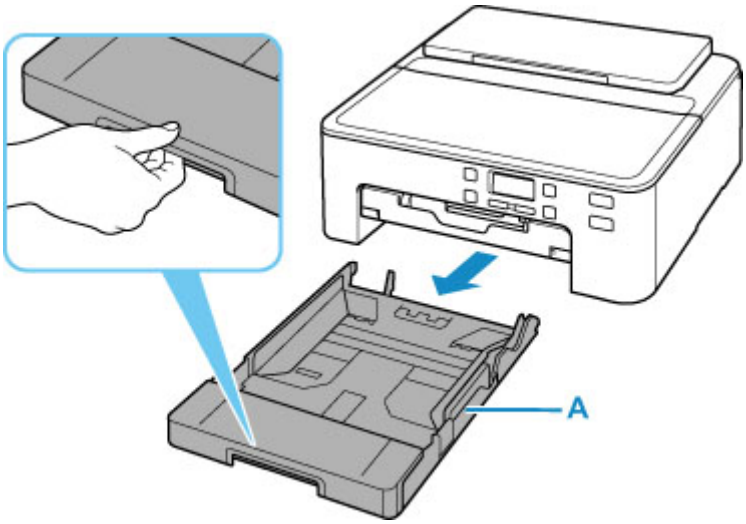

3. Remove the cassette cover (B).

Lift the cassette cover straight up and remove it.

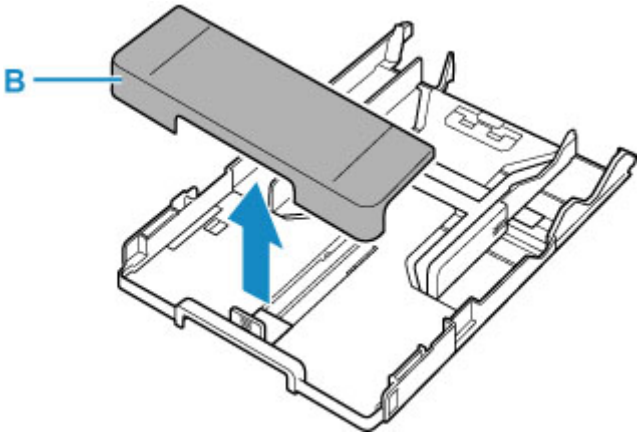

4. Slide paper guides (C) in front and (D) on right to open guides.

5. Load paper stack in portrait orientation WITH PRINT SIDE FACING DOWN, and place it in center of cassette.

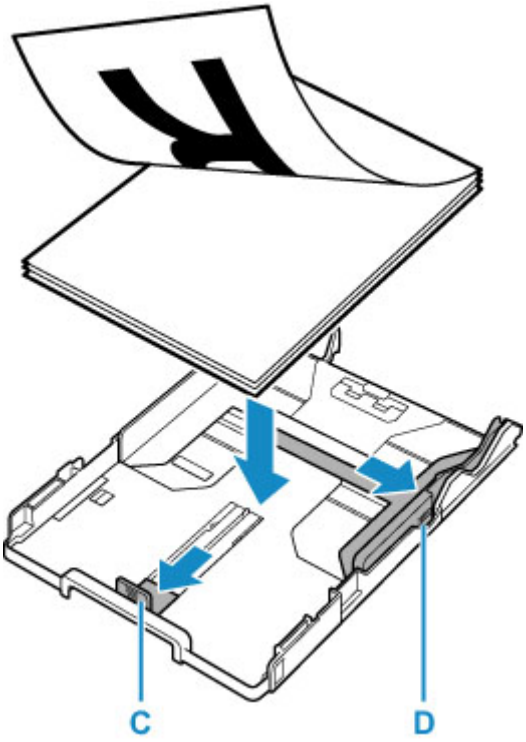

Important

- Always load paper in portrait orientation (E). Loading paper in landscape orientation (F) can cause paper jams.

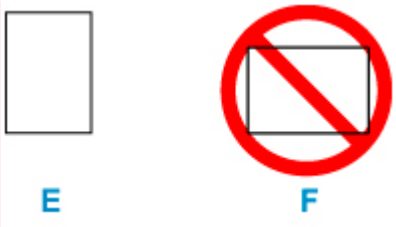

Note

- Align the paper stack with the edge of the cassette as shown in the figure below.

  If the paper stack is in contact with the protrusion (G), the paper may not be fed properly.

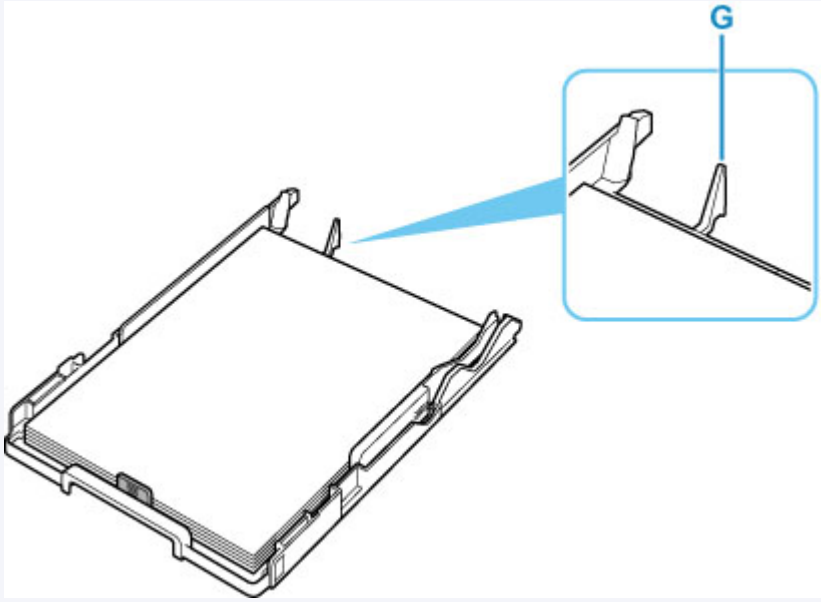

6. Slide front paper guide (C) to align it with paper stack.

Align paper guide with where it clicks into place.

7. Slide right paper guide (D) to align it with paper stack.

Do not slide the paper guide too hard against the paper. The paper may not be fed properly.

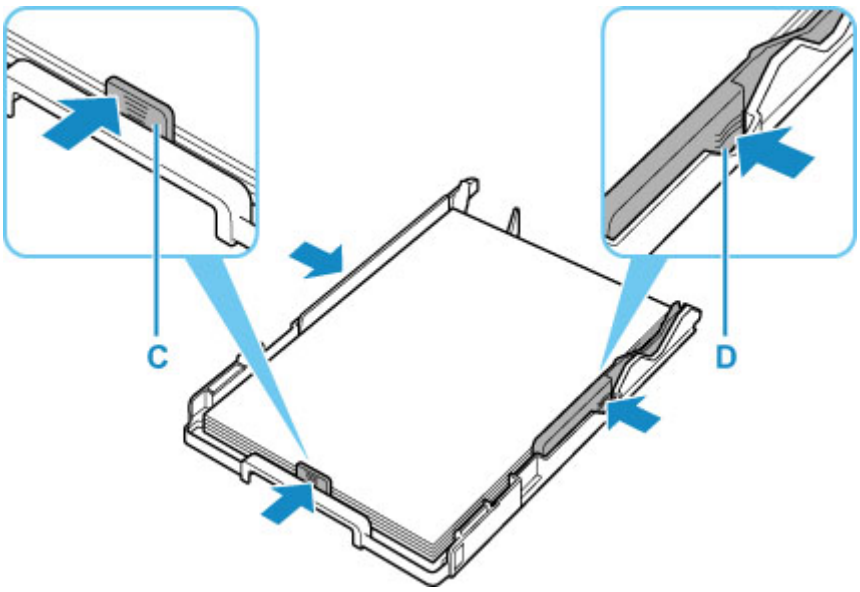

Note

- Do not load sheets of paper higher than the load limit mark (H).
- Keep the paper stack height below the tabs (I) of the paper guides.

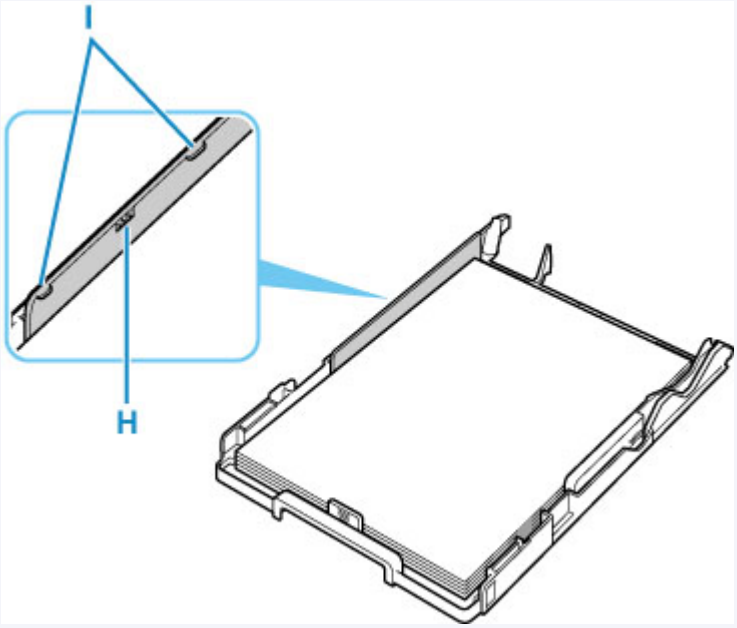

8. Mount cassette cover (B) and insert cassette into printer.

Push the cassette into the printer until it stops.

After inserting the cassette into the printer, the paper information registration screen for the cassette appears on the LCD.

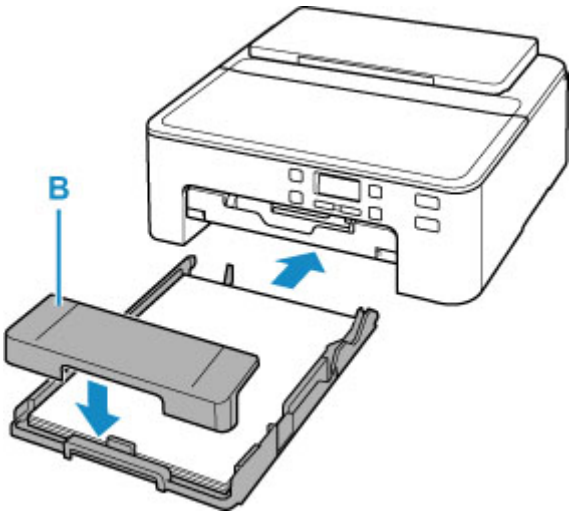

9. Press the **OK** button.

```
Save the cassette paper
[OK]Next
```

10. Use the ◄ ► button to select the size of the loaded paper in the cassette, then press the **OK** button.

```
Size:   ◄ *A4 ►
Type:     *Plain paper
```

Note

- The * (asterisk) on the LCD indicates the current setting.

11. Check media type and press **OK** button.

```
Size:     *A4
Type:     *Plain paper
```

Follow the instructions of any messages displayed to register the paper information.

12. Pull out paper output tray (J) and extend paper output support (K).

Be sure to pull out the paper output tray before printing. If not, printing will not start.

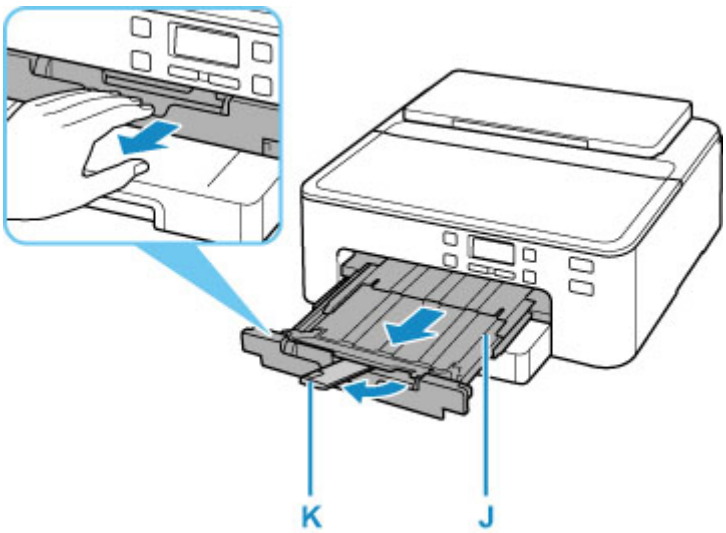

Note

- To prevent incorrect printing, this printer has a function that detects whether the settings for the paper loaded in the cassette matches the paper settings. Before printing, make print settings in accordance with the paper settings. When this function is enabled, an error message is displayed if these settings do not match to prevent incorrect printing. When this error message is displayed, check and correct the paper settings.

Loading Envelopes in Rear Tray

You can load Envelope DL and Envelope Com 10 on the rear tray.

The address is automatically rotated and printed according to the envelope's direction by specifying with the printer driver properly.

Important

- Printing from a PictBridge (Wi-Fi) compliant device is not supported.
- Do not use the following envelopes. They could jam in the printer or cause the printer to malfunction.
  - Envelopes with an embossed or treated surface
  - Envelopes with a double flap
  - Envelopes whose gummed flaps are already moistened and adhesive

1. Prepare envelopes.

- Press down on all four corners and edges of the envelopes to flatten them.

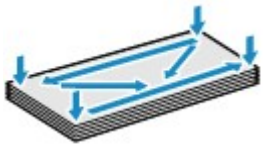

- If the envelopes are curled, hold the opposite corners and gently twist them in the opposite direction.

- If the corner of the envelope flap is folded, flatten it.
- Use a pen to press the leading edge in the inserting direction flat and sharpen the crease.

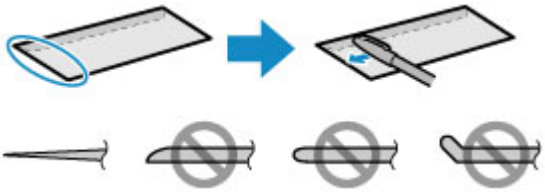

The figures above show a side view of the leading edge of the envelope.

Important

- The envelopes may jam in the printer if they are not flat or the edges are not aligned. Make sure that no curl or puff exceeds 0.12 in. (3 mm).

2. Open paper support (A) and pull out paper support extension (B).

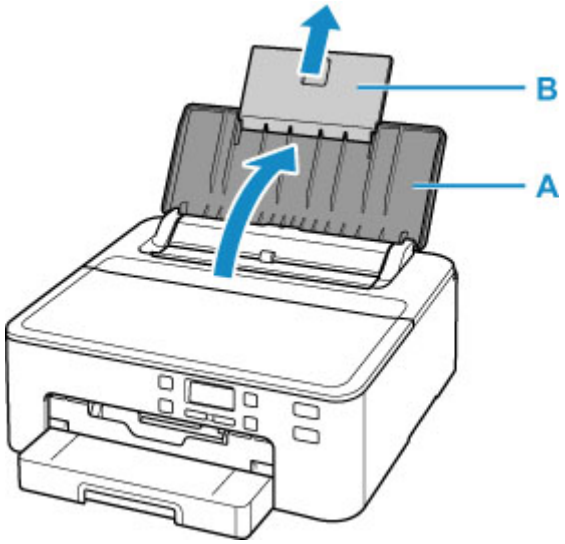

3. Open the feed slot cover (C).

4. Slide right paper guide (D) to open both paper guides.

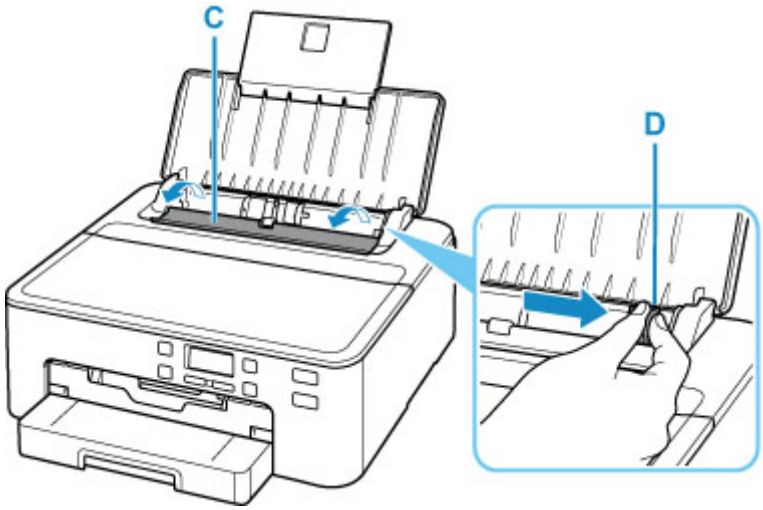

5. Load envelopes in portrait orientation WITH PRINT SIDE FACING UP.

   Up to 10 envelopes can be loaded at once.

   Fold flap of the envelope and load the envelope in portrait orientation with the address side facing up.

6. Slide right paper guide (D) to align with both sides of envelopes.

Do not slide the paper guides too hard against the envelopes. The envelopes may not be fed properly.

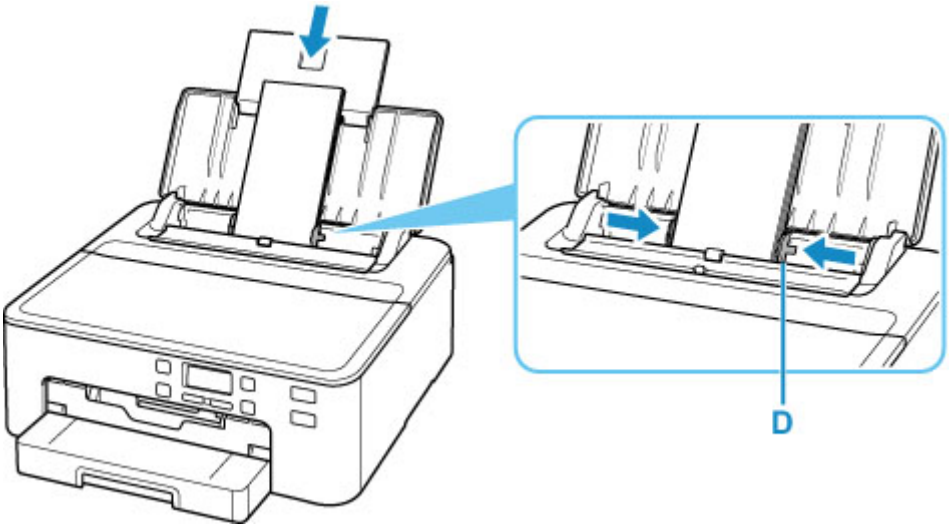

Note

- Do not load envelopes higher than the load limit mark (E).

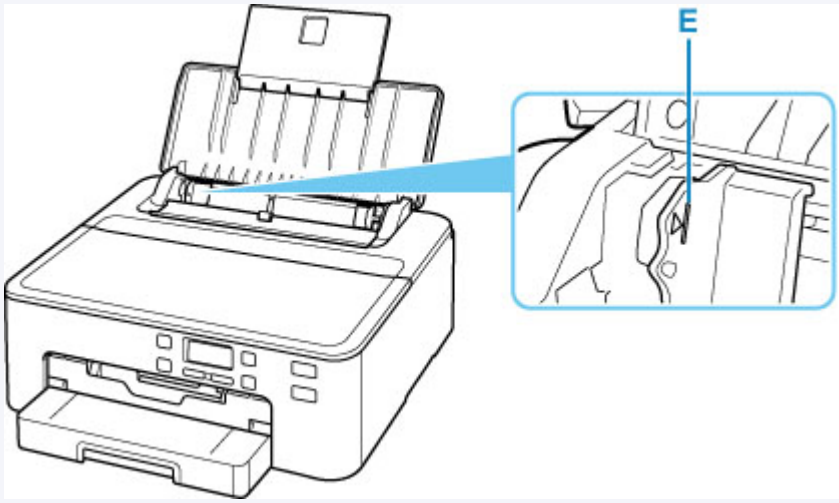

7. Close feed slot cover (C) gently.

Important

- If the feed slot cover is open, paper cannot be fed. Be sure to close the feed slot cover.

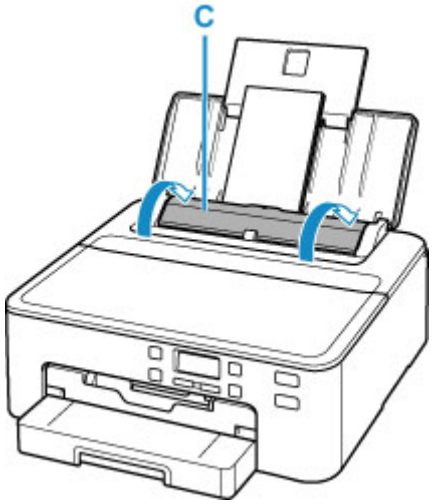

After closing the feed slot cover, the paper information registration screen for the rear tray appears on the LCD.

8. Press the **OK** button.

```
Save the rear tray paper
[OK]Next
```

9. Use ◄ ► button to select size of loaded envelopes on rear tray and press **OK** button.

```
Size:   ◄ Envelope DL ►
Type:     *Plain paper
```

Note

- The * (asterisk) on the LCD indicates the current setting.

10. Use ◄ ► button to select **Envelope** and press **OK** button.

```
Size:     Envelope DL
Type:   ◄ Envelope    ►
```

Follow the instructions of any messages displayed to register the paper information.

11. Pull out paper output tray (F) and extend paper output support (G).

Be sure to pull out the paper output tray before printing. If not, printing will not start.

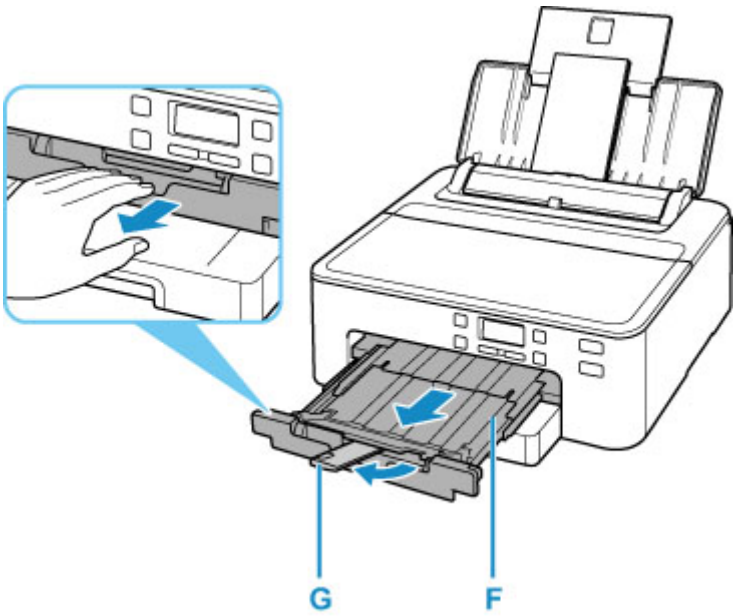

Note

- To prevent incorrect printing, this printer has a function that detects whether the settings for the paper loaded on the rear tray matches the paper settings. Before printing, make print settings in accordance with the paper settings. When this function is enabled, an error message is displayed if these settings do not match to prevent incorrect printing. When this error message is displayed, check and correct the paper settings.

Placing Multi-purpose Tray

- Cautions When Printing with Multi-purpose Tray
- Placing a Printable Disc
- Placing Printable Nail Stickers
- How to Detach / Attach Multi-purpose Tray

Cautions When Printing with Multi-purpose Tray

Cautions Common to using Multi-purpose Tray

- Be sure to use the multi-purpose tray supplied with this printer.
- Do not mount the multi-purpose tray while the printer is in operation.
- Do not remove the multi-purpose tray while the printer is in operation. Doing so may damage the printer, the multi-purpose tray, or the media.
- Do not get dirt on the multi-purpose tray or scratches on the reflectors. The printer may not be able to recognize that a media is loaded, or printing may become misaligned. If the multi-purpose tray becomes dirty, wipe the reflector clean with a soft and dry cloth, taking care not to scratch it.
- After printing, allow the printing surface of the media to dry naturally. Do not use hairdryers or expose the media to direct sunlight to dry the ink. Do not touch the printing surface until the ink has dried.

Cautions When Printing onto Printable Disc

- Remove any dirt from the multi-purpose tray before placing printable discs on it. Loading discs on a dirty multi-purpose tray may scratch the recording surface of the discs.
- Do not print onto printable discs that are not compatible with inkjet printing. The ink will not dry and may cause problems with the disc itself or DVD players or other devices it is loaded into.
- Do not print onto a printable disc's recording surface. Doing so will make data recorded onto discs unreadable.
- Hold printable discs by their edges. Do not touch either the label surface (printing surface) or recording surface.
- The multi-purpose tray may become dirty if software other than Easy-PhotoPrint Editor is used.

Cautions When Printing on Printable Nail Stickers

- For precautions on Printable Nail Stickers, refer to the instructions supplied with the Printable Nail Stickers.
- The multi-purpose tray may become dirty if an application other than Nail Stickers Creator is used.

Placing a Printable Disc

- Before Placing a Printable Disc
- Placing a Printable Disc
- Removing a Printable Disc

Before Placing a Printable Disc

A printable disc differs from regular disc (BD/DVD/CD, etc.) in that its label surface has been specially processed or printing by an inkjet printer.

The following items are needed to print onto the printable disc.

- Multi-purpose tray (supplied with the printer)

  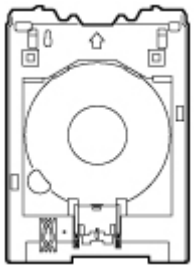

  The multi-purpose tray is stored in the back of the cassette.

- 4.72 in. (12 cm) printable disc

  Obtain a printable disc with a label surface compatible with inkjet printing.

Placing a Printable Disc

To print onto a printable disc, place it on the supplied multi-purpose tray, and then insert it into the printer.

Important

- Do not mount the multi-purpose tray until the message prompting you to load the printable disc appears. Doing so can damage the printer.

Note

- If test printing is executed onto test printing paper, depending on the paper type, the printer may not be able to read its size correctly, preventing the border areas from being printed. Test printing paper should be used for purposes of checking the envisioned layout.

1. When message prompting you to load printable disc appears, detach multi-purpose tray from back of cassette.

   Insert the removed cassette back into the printer.

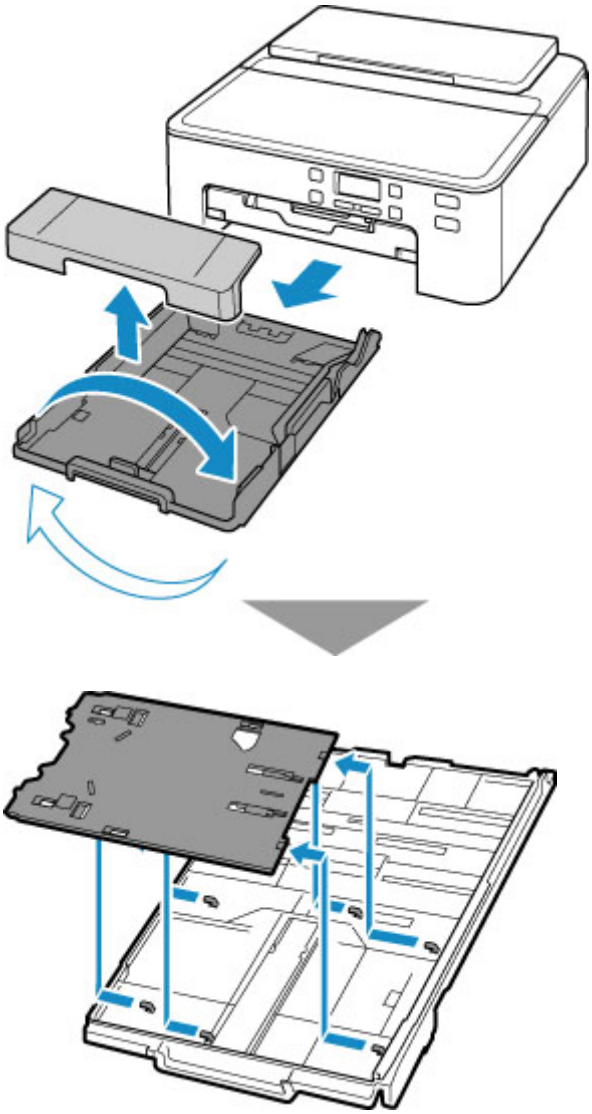

Note

- After inserting the cassette into the printer, if a message appears on the screen, complete registration of paper information by pressing the **OK** button.

2. Push paper output tray (A) all the way in.

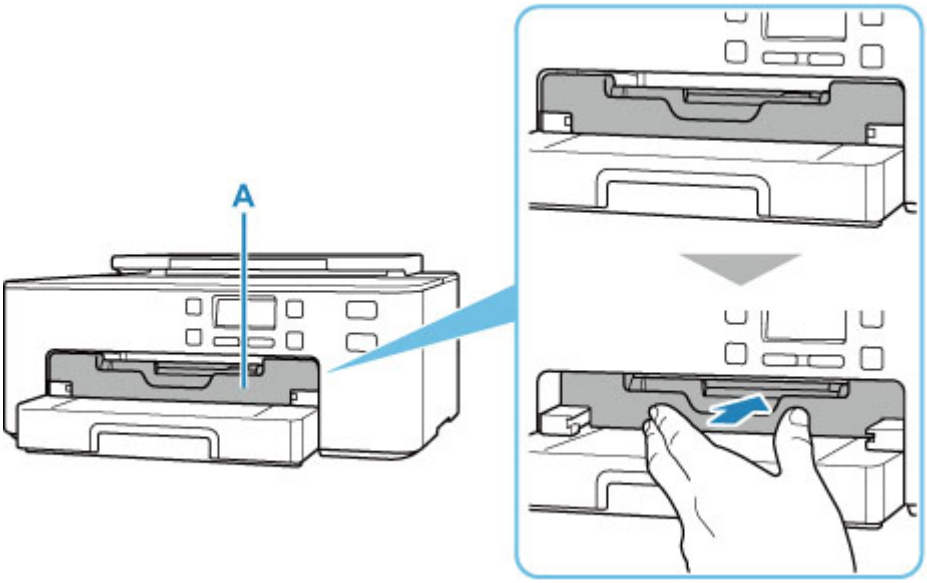

3. Place printable disc on multi-purpose tray.

Important

- Check that there is no dirt on the multi-purpose tray before placing a printable disc on it.
- When placing a printable disc on the multi-purpose tray, do not touch the printing surface of the disc or the reflectors (B) on the multi-purpose tray.

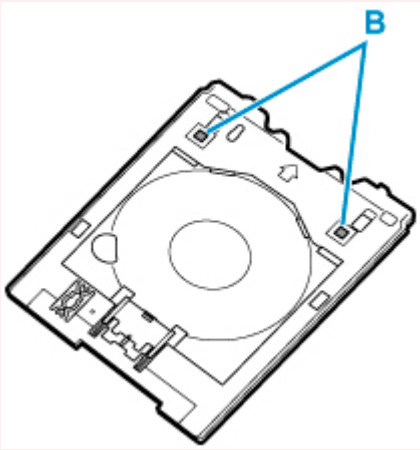

1. WITH PRINT SIDE FACING UP, place printable disc, and press it against lock (C) at bottom.

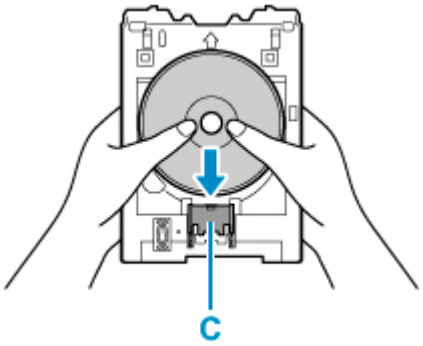

2. While pressing down lock with printable disc, insert top of printable disc into slits (D).

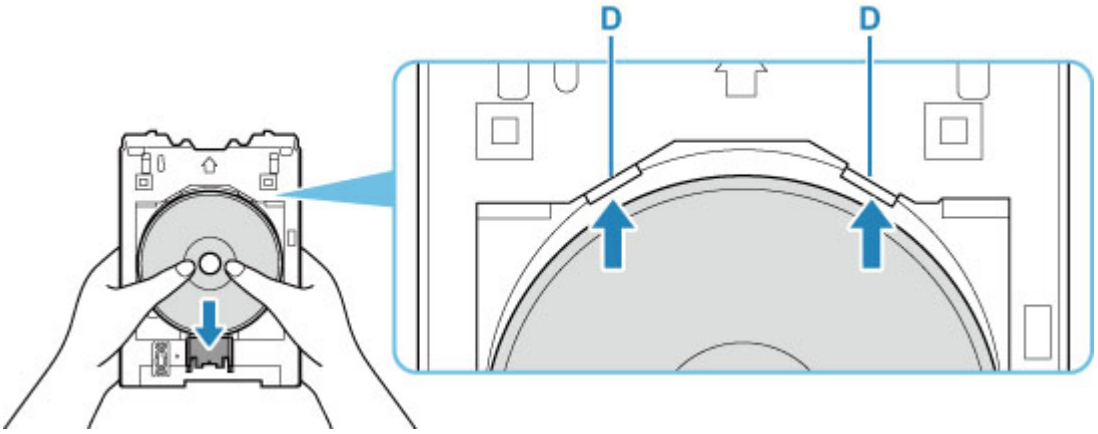

4. Place multi-purpose tray on multi-purpose tray guide.

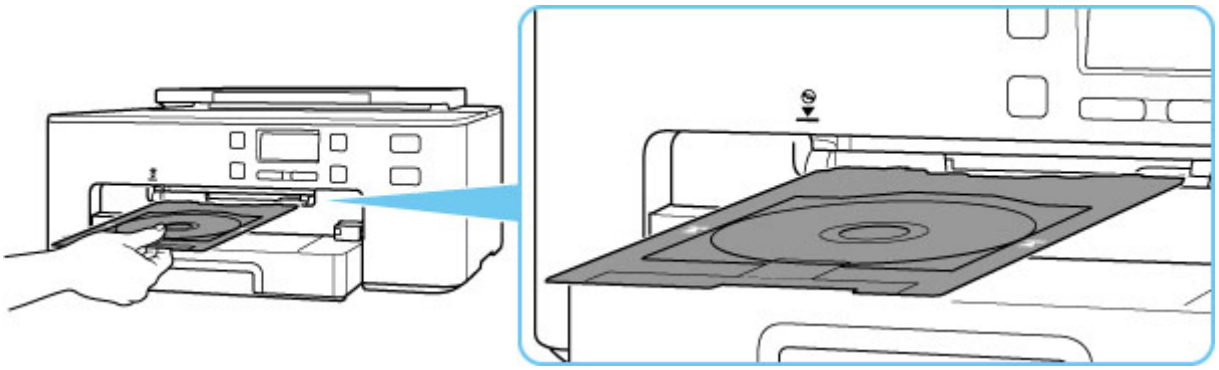

5. Insert multi-purpose tray straight in in horizontal direction until arrow ( ) on multi-purpose tray guide is approximately aligned with arrow ( ) on multi-purpose tray.

Important

- Do not insert the multi-purpose tray beyond the arrow ( ) on the multi-purpose tray guide.

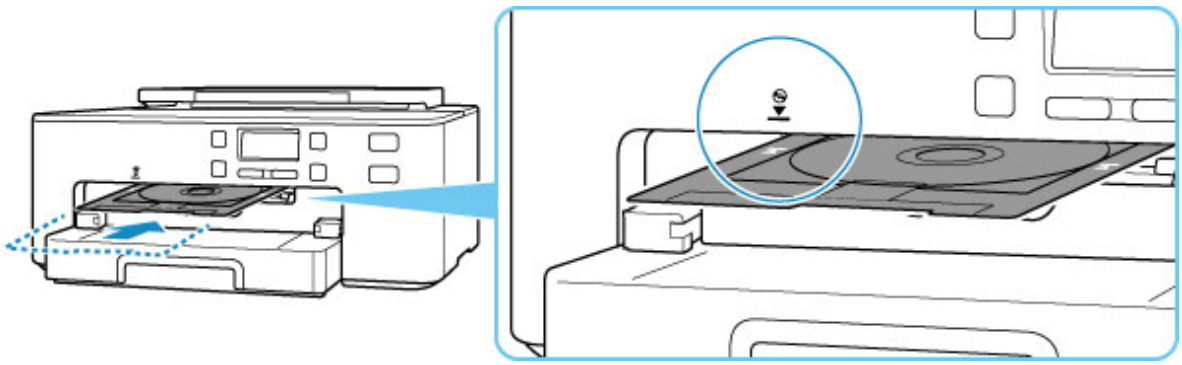

Note

- The multi-purpose tray may be ejected after a certain amount of time passes. In such a case, follow the on-screen instructions to place the multi-purpose tray again.

Removing a Printable Disc

1. Pull out multi-purpose tray.

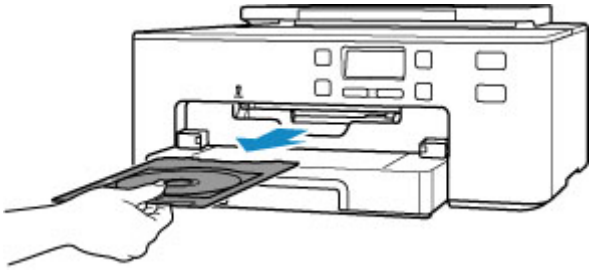

2. While pressing down lock (A), take out printable disc from slits (B) on multi-purpose tray, and remove it.

Important

- Do not touch the printing surface when removing the disc from the multi-purpose tray.

Note

- Allow the printing surface to dry before removing the disc. If you see printing on the multi-purpose tray or on the transparent parts of the inner or outer diameters of the printable disc, wipe them clean after the printing surface has dried.

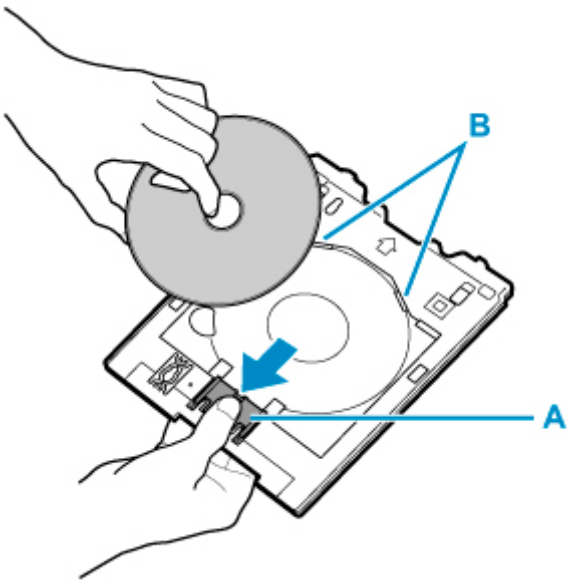

3. Pull paper output tray (C) towards you until it aligns with operation panel (D).

Important

- If the paper output tray is pushed into the printer, you cannot print onto regular printing paper. Be sure to pull the paper output tray towards you until it aligns with the operation panel.

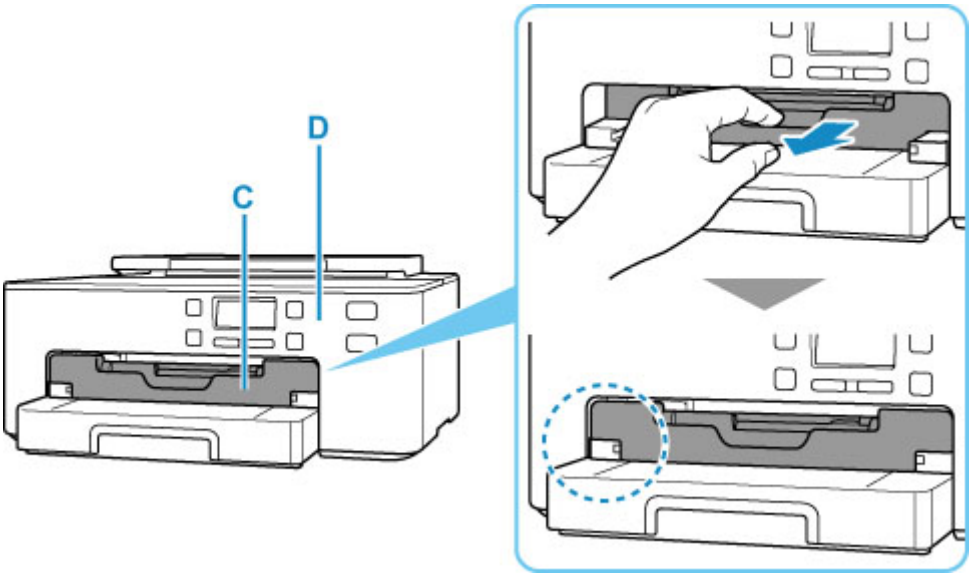

4. Store multi-purpose tray under cassette.

How to Detach / Attach Multi-purpose Tray

Placing Printable Nail Stickers

- Before Placing Printable Nail Stickers
- Placing Printable Nail Stickers
- Removing Printable Nail Stickers

Before Placing Printable Nail Stickers

The following items are needed to print onto Printable Nail Stickers.

- Multi-purpose tray (supplied with the printer)

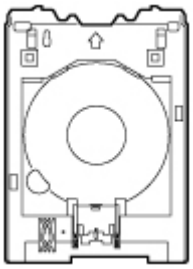

The multi-purpose tray is stored in the back of the cassette.

- Printable Nail Stickers (NL-101)

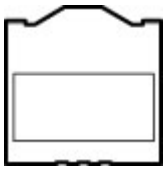

Note

- For the latest information on Printable Nail Stickers, access our website.

Placing Printable Nail Stickers

To print onto Printable Nail Stickers, place them on the multi-purpose tray supplied with the printer, and then insert them into the printer.

Important

- Do not mount the multi-purpose tray until the message prompting you to load Printable Nail Stickers appears. Doing so can damage the printer.

1. When message prompting you to load Printable Nail Stickers appears, detach multi-purpose tray from back of cassette.

   Insert the removed cassette back into the printer.

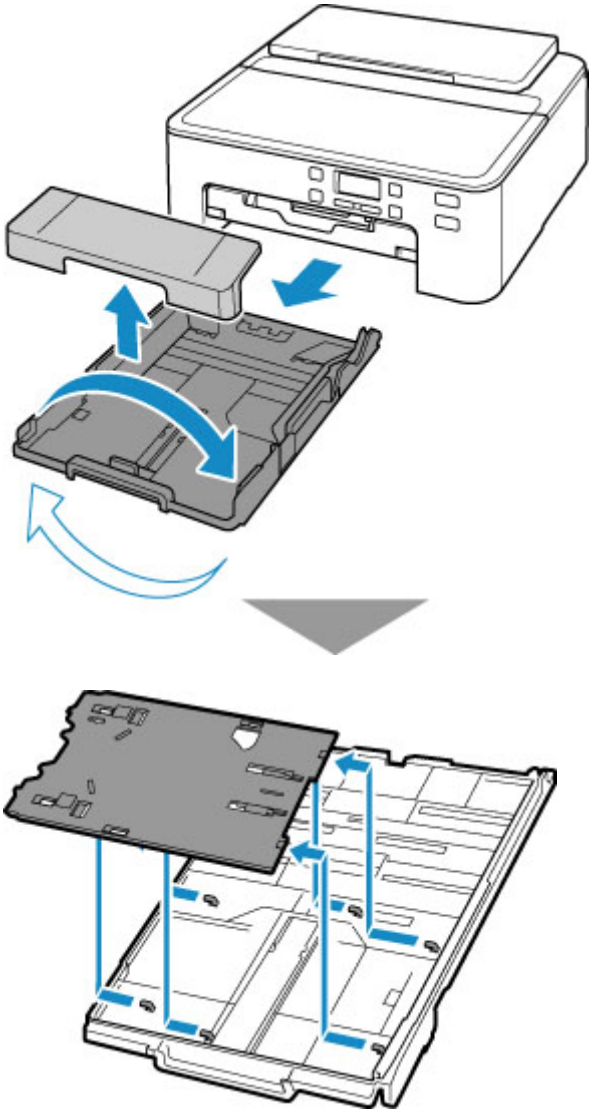

Note

- After inserting the cassette into the printer, if a message appears on the screen, complete registration of paper information by pressing the **OK** button.

2. Push paper output tray (A) all the way in.

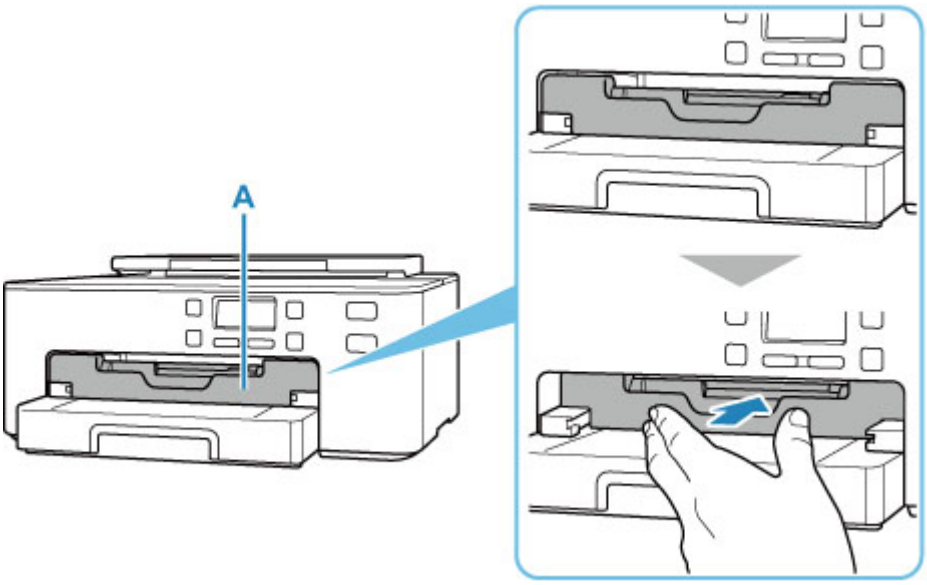

3. Place Printable Nail Stickers on multi-purpose tray.

Important

- Check that there is no dirt on the multi-purpose tray before placing Printable Nail Stickers on it.
- To prevent getting dirt or fingerprints on Printable Nail Stickers, hold the stickers by their edges. If the print side gets any dirt or is damaged, it may cause poor print quality.
- When placing Printable Nail Stickers on the multi-purpose tray, do not touch the reflectors (B) on the multi-purpose tray.

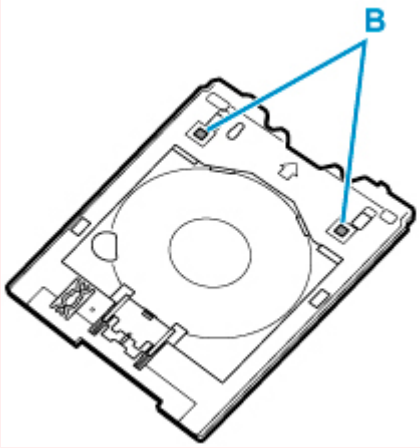

1. WITH PRINT SIDE FACING UP, place Printable Nail Stickers and press it against lock (C) at bottom.

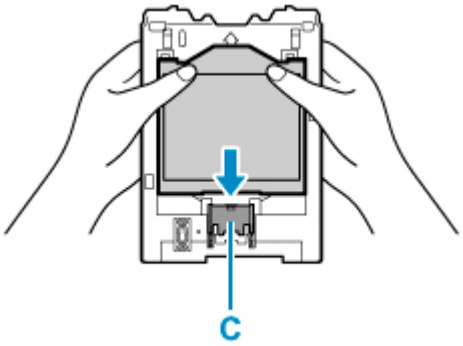

2. While pressing down lock with Printable Nail Stickers, insert two tabs (D) on top into slits (E) on multi-purpose tray.

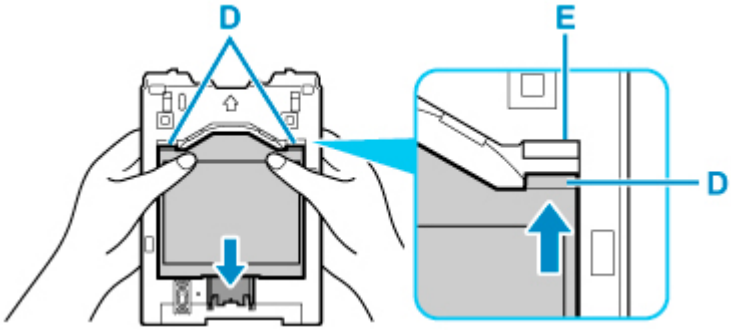

4. Place multi-purpose tray on multi-purpose tray guide.

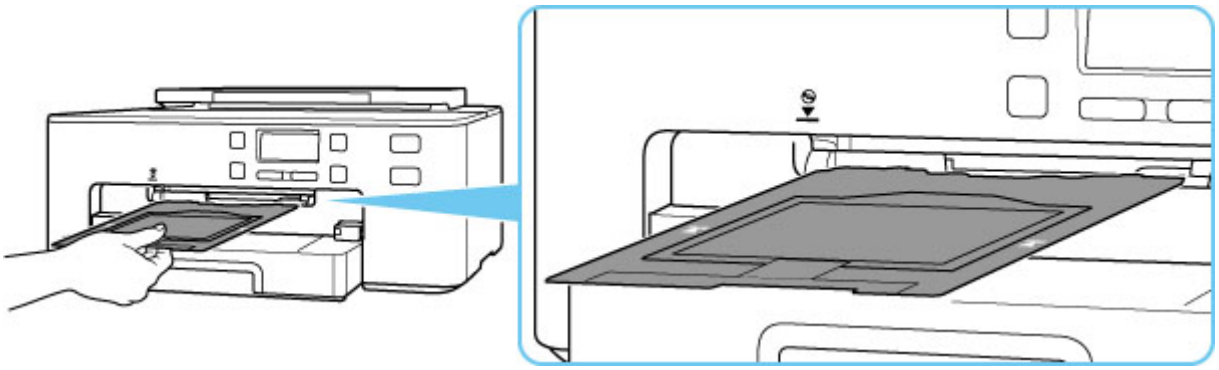

5. Insert multi-purpose tray straight in in horizontal direction until arrow (▼) on multi-purpose tray guide is approximately aligned with arrow (▲) on multi-purpose tray.

Important

- Do not insert the multi-purpose tray beyond the arrow (▼) on the multi-purpose tray guide.

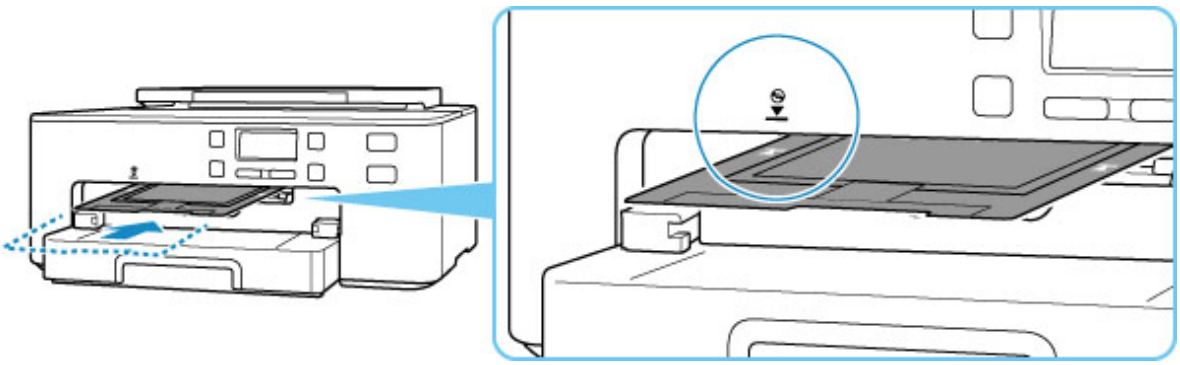

Note

- The multi-purpose tray may be ejected after a certain amount of time passes. In such a case, follow the on-screen instructions to place the multi-purpose tray again.

Removing Printable Nail Stickers

1. Pull out multi-purpose tray.

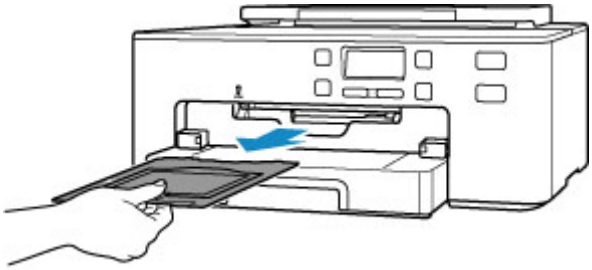

2. Remove Printable Nail Stickers.

While pressing down lock (A), remove two tabs (B) on the top out of slits (C).

Important

- Do not touch the printing surface when removing Printable Nail Stickers.

Note

- Allow the printing surface to dry before removing Printable Nail Stickers. If you see printing on the multi-purpose tray or outside the Printable Nail Stickers, wipe them clean after the printing surface has dried.

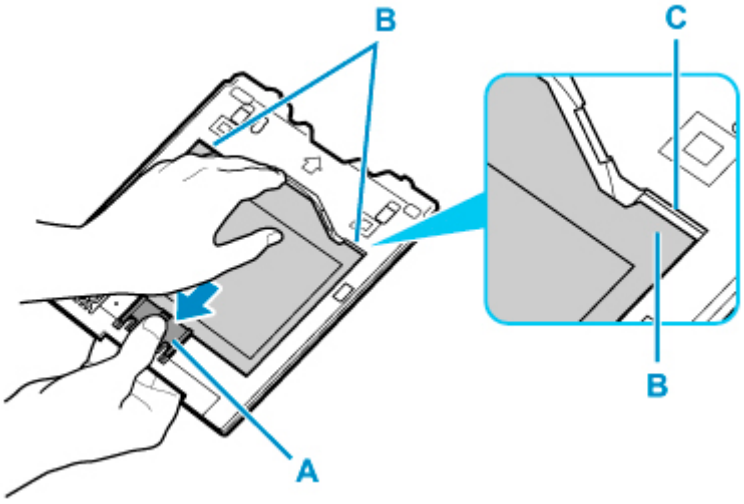

3. Peel a sheet of Printable Nail Stickers from adapter.

Important

- Allow the printing surface to dry before tearing off Printable Nail Stickers from its edges.

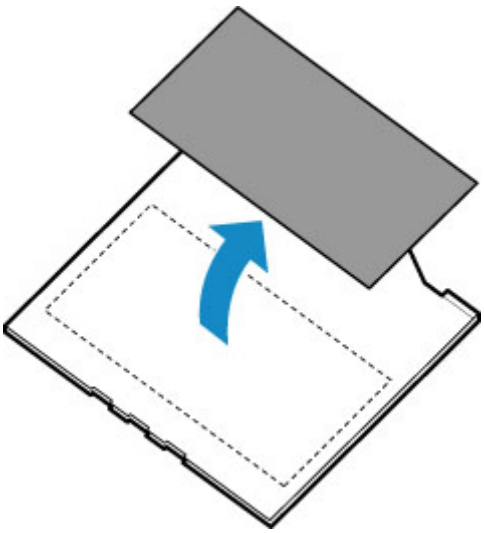

4. Pull paper output tray (D) towards you until it aligns with operation panel (E).

Important

- If the paper output tray is being pushed into the printer, the normal printing cannot be executable. Be sure to pull the paper output tray towards you until it aligns with the operation panel.

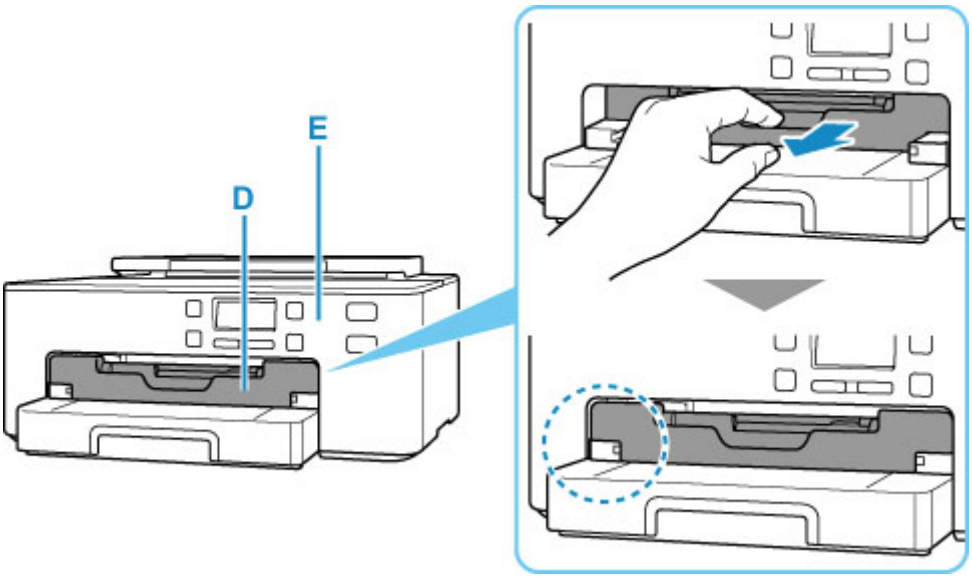

5. Store multi-purpose tray under cassette.

How to Detach / Attach Multi-purpose Tray

How to Detach / Attach Multi-purpose Tray

Detaching Multi-purpose Tray

1. Take cassette out of printer and remove cassette cover.

   Be sure to remove any paper.

2. Turn cassette over and remove multi-purpose tray.

   Slide the multi-purpose tray, take it out of the six tabs (A), and then lift it.

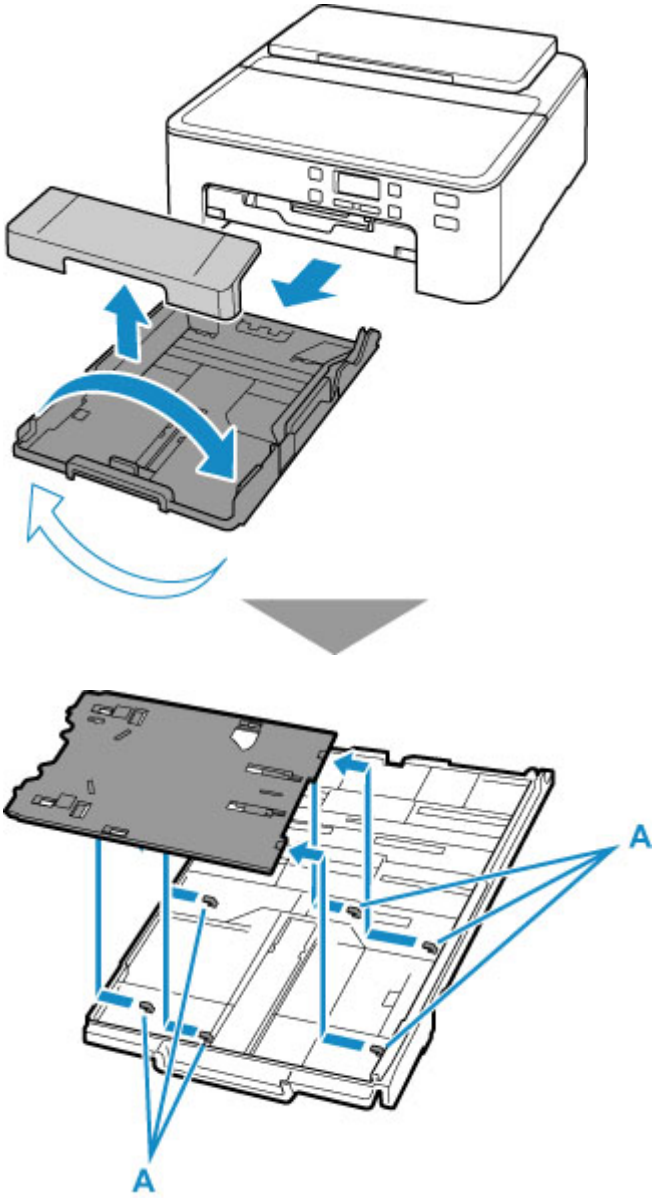

Important

- Be sure to remove any orange shipping tape on the multi-purpose tray.

Attaching Multi-purpose Tray

1. Take cassette out of printer and remove cassette cover.

   Be sure to remove any paper.

2. Turn cassette over and attach multi-purpose tray to it.

   Turn the multi-purpose tray so that its underside faces up, align it with the six tabs (A) in the orientation shown in the figure below, and then slide to attach.

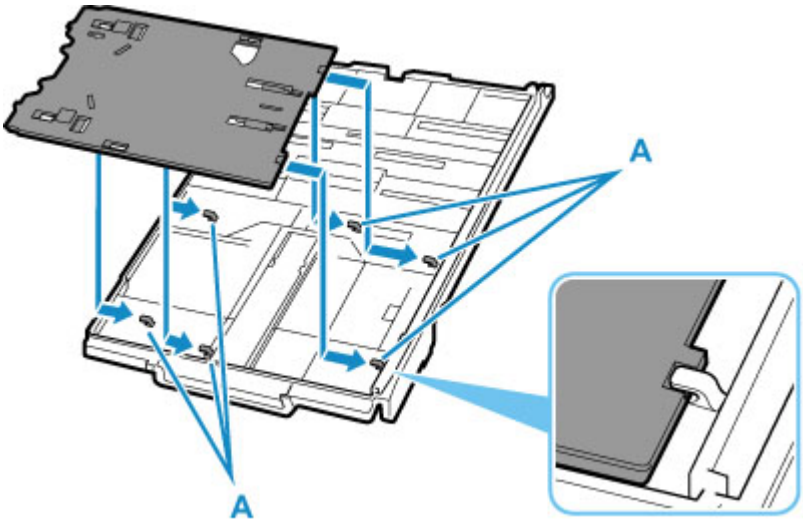

Important

- Insert the multi-purpose tray, making sure that its holes are aligned with the tabs on the back of the cassette. If the multi-purpose tray is not properly attached, it may be damaged when the cassette is inserted into the printer.

Replacing Ink Tanks

- Replacing Ink Tanks
- Checking Ink Status on the LCD
- Ink Tips

Replacing Ink Tanks

When remaining ink cautions or errors occur, the message will appear on the LCD to inform you of the error. In this state, the printer cannot print. Take appropriate action according to the message.

An Error Occurs

Note

- If print results become faint or white streaks appear despite sufficient ink levels, see Maintenance Procedure.
- For precautionary notes on handling ink tanks, see Notes on ink tanks.

Replacing Procedure

When you need to replace an ink tank, follow the procedure below.

1. Check that printer is turned on.

2. Open top cover.

   The print head holder moves to the replacement position.

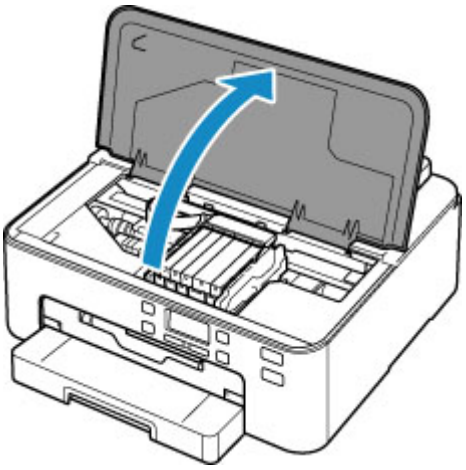

Caution

- Do not hold the print head holder to stop or move it forcibly. Do not touch the print head holder until it stops completely.

Important

- Do not touch the metallic parts or other parts inside the printer.
- If the top cover is left open for more than 10 minutes, the print head holder moves to the right. In this case, close and reopen the top cover.

3. Remove the ink tank where the ink runs out.

Push the tab (A) and lift the ink tank to remove.

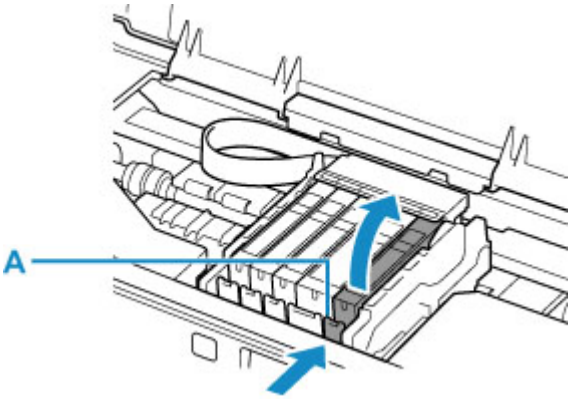

Important

- Do not touch other parts besides the ink tanks.
- Handle the ink tank carefully to avoid staining of clothing or the surrounding area.
- Discard the empty ink tank according to the local laws and regulations regarding disposal of consumables.

Note

- Do not remove two or more ink tanks at the same time. Be sure to replace ink tanks one by one when replacing two or more ink tanks.

4. Take a new ink tank out of its package, remove the orange tape (B) completely, then remove the protective film (C) completely.

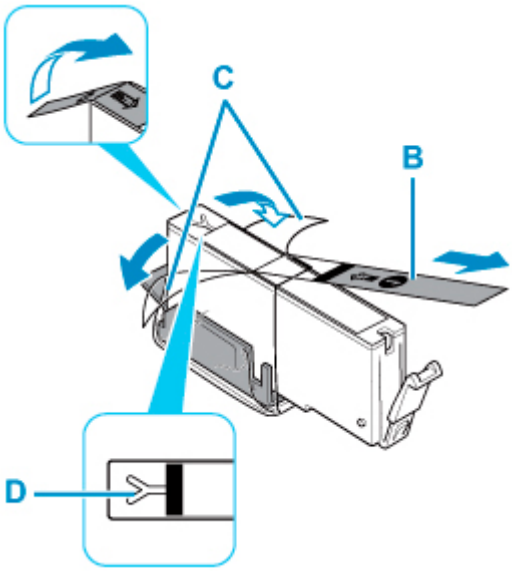

Important

- Handle an ink tank carefully. Do not drop or apply excessive pressure to it.
- If the orange tape remains on the Y-shape air hole (D), ink may splash or the printer may not print properly.

5. Hold the ink tank with the orange protective cap (E) pointing up while being careful not to block the Y-shape air hole (D).

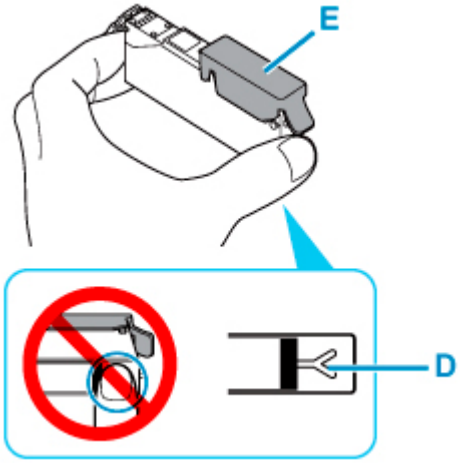

6. Lift up the tab on the orange protective cap (E) to remove it off GENTLY.

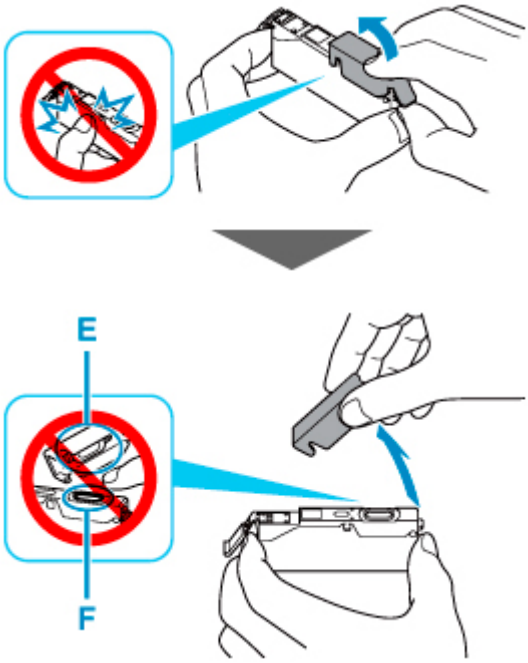

Important

- Do not push the sides of the ink tank. If you push the sides of the ink tank with the Y-shape air hole (D) blocked, ink may splash.
- Do not touch the inside of the orange protective cap (E) or the open ink port (F). The ink may stain your hands if you touch them.
- Do not reattach the protective cap (E) once you have removed it. Discard it according to the local laws and regulations regarding disposal of consumables.

7. Insert the front end of the ink tank into the print head at a slant.

Make sure that the position of the ink tank matches the label.

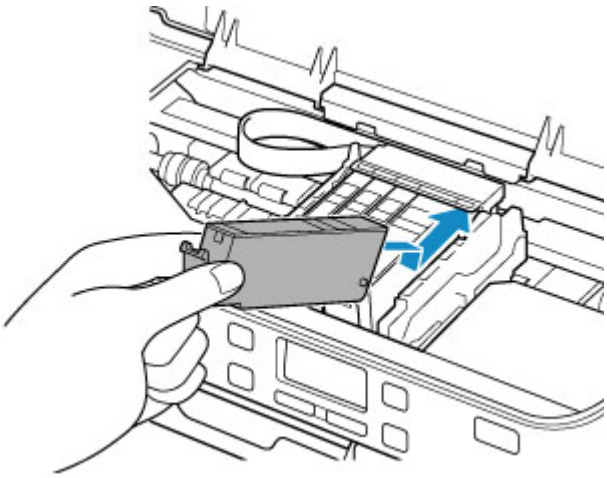

8. Press on the top of the ink tank until the ink tank snaps firmly into place.

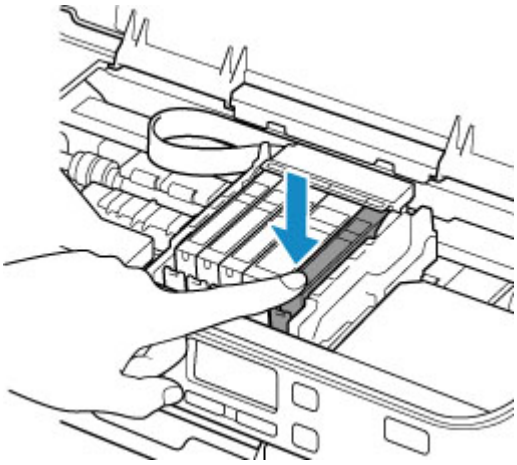

Important

- You cannot print if the ink tank is installed in the wrong position. Be sure to install the ink tank in the correct position according to the label on the print head holder.
- You cannot print unless all the ink tanks are installed. Be sure to install all the ink tanks.

9. Close top cover.

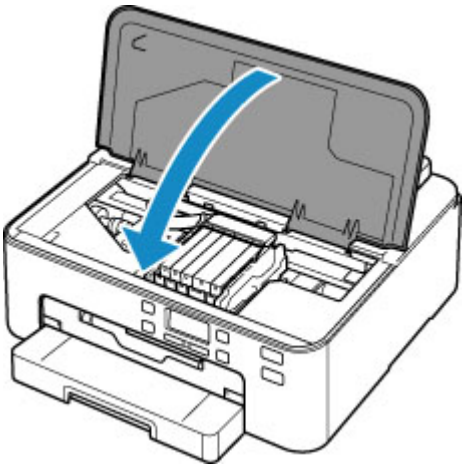

Note

- If the error message appears on the LCD after the top cover is closed, take appropriate action.

  An Error Occurs

- When you start printing after replacing the ink tank, the printer starts cleaning the print head automatically. Do not perform any other operations until the printer completes the cleaning of the print head.
- If the print head is out of alignment, as indicated by misaligned printed ruled lines or similar symptoms, align the print head.
- The printer may make noise during operation.

Notes on ink tanks

Important

- If you remove an ink tank, replace it immediately. Do not leave the printer with the ink tank removed.
- Use a new ink tank for replacement. Installing a used ink tank may cause the nozzles to clog. Furthermore, with such an ink tank, the printer will not be able to inform you when to replace the ink tank properly.
- Once an ink tank has been installed, do not remove it from the printer and leave it out in the open. This will cause the ink tank to dry out, and the printer may not operate properly when it is reinstalled. To maintain optimal printing quality, use an ink tank within six months of first use.

Note

- Color ink may be consumed even when printing a black-and-white document or when black-and-white printing is specified. Every ink is also consumed in the standard cleaning and deep cleaning of the print head, which may be necessary to maintain the performance of the printer.

  When an ink tank is out of ink, replace it immediately with a new one.

  Ink Tips

Checking Ink Status on the LCD

You can also check ink status on the LCD.

A symbol appears in area A in case of any messages about the remaining ink level.

Example: ⓘ

The ink is running low. Prepare a new ink tank.

The resulting print quality may not be satisfactory, if printing is continued under this condition.

Note

- The above screen shows estimated ink levels.
- You can also check the ink status on the computer screen.
  - For Windows:
    - Checking Ink Status from Your Computer
  - For macOS:
    - Checking Ink Status from Your Computer

Ink Tips

How is ink used for various purposes other than printing?

Ink may be used for purposes other than printing.

When you use the Canon printer for the first time after you install the bundled ink tanks, the printer consumes a small amount of ink in the amount to enable printing by filling the nozzles of the Print Head with ink. For this reason, the number of sheets that can be printed with the first ink tanks is fewer than the succeeding ink tanks.

The printing costs described in the brochures or websites are based on the consumption data from not the first ink tank /ink cartridge but the succeeding ink tank /ink cartridge.

Ink is sometimes used to maintain the optimal printing quality.

To keep printer's performance, Canon printer performs cleaning automatically according to its condition. When the printer performs cleaning, a small amount of ink is consumed. In this case, all colors of ink may be consumed.

[Cleaning function]

The cleaning function helps the printer to suck air bubbles or ink itself from the nozzle and thus prevents print quality degradation or nozzle clogging.

Does black-and-white printing use color ink?

Black-and-white printing may use ink other than black ink depending on the type of printing paper or the settings of the printer driver. So, color ink is consumed even when printing in black-and-white.

Why does the printer have two black ink tanks?

There are two kinds of black ink in the printer: dye ink (BK) and pigment ink (PGBK).

The dye ink is used mainly for printing photos, illustration, etc., and the pigment ink is used for text-based documents. Each has different purposes so that even if one runs out, another will not be used instead. If either of them runs out, the ink tank replacement is required.

These two inks are automatically used depending on the type of printing paper or the settings of the printer driver. You cannot change the usage of these inks yourself.

If Printing Is Faint or Uneven

- Maintenance Procedure
- Printing the Nozzle Check Pattern
- Examining the Nozzle Check Pattern
- Cleaning the Print Head
- Deep Print Head Cleaning
- Aligning the Print Head

Maintenance Procedure

If print results are blurred, colors are not printed correctly, or print results are unsatisfactory (e.g. misaligned printed ruled lines), perform the maintenance procedure below.

Important

- Do not rinse or wipe the print head and ink tank. This can cause trouble with the print head and ink tank.

Note

- Make sure that the orange protective tape does not remain on the ink tank.

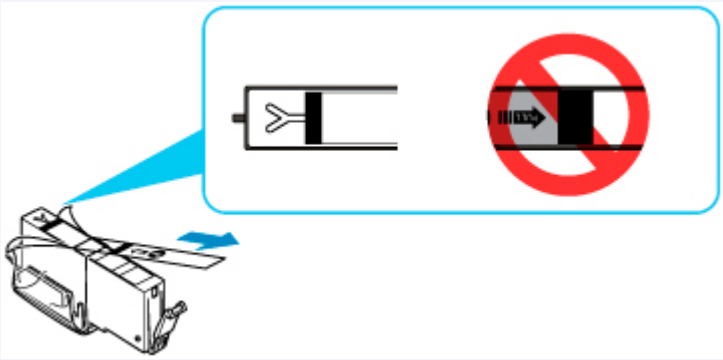

- Check the ink status.

  Checking Ink Status on the LCD

- For Windows, increasing the print quality in the printer driver settings may improve the print result.

  Changing the Print Quality and Correcting Image Data

When the Print Results Are Blurred or Uneven:

Step1 Print the nozzle check pattern.

From the printer

Printing the Nozzle Check Pattern

From the computer

- For Windows:

  Printing a Nozzle Check Pattern

- For macOS:

  Printing a Nozzle Check Pattern

Step2 Examine the nozzle check pattern.

If there are missing lines or horizontal white streaks in the pattern:

Step3 Clean the print head.

From the printer

- Cleaning the Print Head

From the computer

- For Windows:
  - Cleaning the Print Heads
- For macOS:
  - Cleaning the Print Heads

After cleaning the print head, print and examine the nozzle check pattern: ➡ Step1

If the problem is not resolved after performing from step 1 to step 3 twice:

Step4 Clean the print head deeply.

From the printer

- Deep Print Head Cleaning

From the computer

- For Windows:
  - Cleaning the Print Heads
- For macOS:
  - Cleaning the Print Heads

Note

- When you have performed the procedure until step 4 and the problem has not been resolved, turn off the power and clean the print head deeply again after 24 hours.

  If the problem is still not resolved, the print head may be damaged. Contact your nearest Canon service center to request a repair.

When the Print Results Are Not Even such as the Ruled Lines Are Misaligned:

Step Align the print head.

From the printer

- Aligning the Print Head

From the computer

- For Windows:
  - Adjusting Print Head Position Automatically
- For macOS:

Adjusting Print Head Position

Printing the Nozzle Check Pattern

Print the nozzle check pattern to determine whether the ink ejects properly from the print head nozzle.

Note

- If the remaining ink level is low, the nozzle check pattern will not be printed correctly. Replace the ink tank whose ink is low.

You need to prepare: a sheet of A4 or Letter-sized plain paper

1. Check that printer is turned on.

2. Load a sheet of A4 or Letter-sized plain paper in the cassette.

   Loading Paper in the Cassette

3. Press the **Setup** button, use the ◄ ► button to select **Maintenance**, and press the **OK** button.

   LCD and Operation Panel

4. Use the ◄ ► button to select **Nozzle check** and press the **OK** button.

   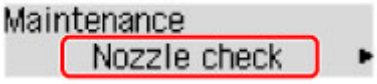

   The nozzle check pattern will be printed.

   Do not perform any other operations until the printer completes the printing of the nozzle check pattern.

5. Examine the nozzle check pattern.

Examining the Nozzle Check Pattern

Examine the nozzle check pattern, and clean the print head if necessary.

1. Check if there are missing lines in the pattern A or horizontal white streaks in the pattern B.

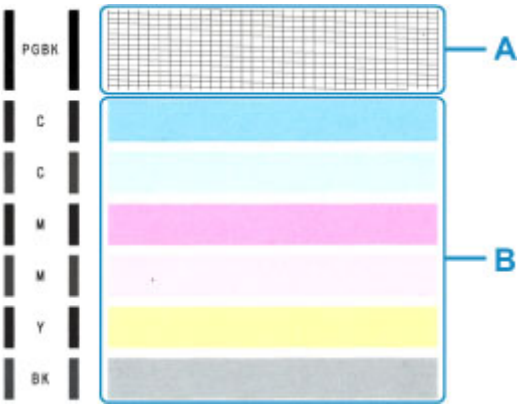

If there are missing lines in the pattern A:

C: Good
D: Bad (lines are missing)

If there are horizontal white streaks in the pattern B:

E: Good
F: Bad (horizontal white streaks are present)

If any color in the pattern A or the pattern B is not printed:

(Example: Magenta pattern is not printed)

If one of the above is applied, cleaning the print head is required.

Cleaning the Print Head

Clean the print head if lines are missing or if horizontal white streaks are present in the printed nozzle check pattern. Cleaning unclogs the nozzles and restores the print head condition. Cleaning the print head consumes ink, so clean the print head only when necessary.

1. Check that printer is turned on.

2. Press the **Setup** button, use the ◄ ► button to select **Maintenance**, and press the **OK** button.

   LCD and Operation Panel

3. Use the ◄ ► button to select **Cleaning** and then press the **OK** button.

   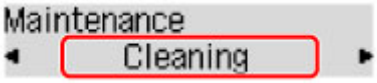

   The printer starts cleaning the print head.

   Do not perform any other operations until the printer completes the cleaning of the print head. This takes about 1 minute.

4. Check the print head condition.

   To check the print head condition, print the nozzle check pattern.

Note

- If the problem is not resolved after cleaning the print head twice, clean the print head deeply.

Deep Print Head Cleaning

If print quality does not improve by the standard cleaning of the print head, clean the print head deeply. Cleaning the print head deeply consumes more ink than the standard cleaning of the print head, so clean the print head deeply only when necessary.

1. Check that printer is turned on.

2. Press the **Setup** button, use the ◄ ► button to select **Maintenance**, and press the **OK** button.

   LCD and Operation Panel

3. Use ◄ ► button to select **Deep Cleaning** and press **OK** button.

   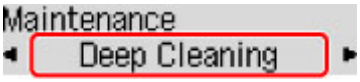

   The printer starts cleaning the print head deeply.

   Do not perform any other operations until the printer completes the deep cleaning of the print head. This takes about 1 to 2 minutes.

4. Check the print head condition.

   To check the print head condition, print the nozzle check pattern.

If a particular color is not printed properly, replace the ink tank of that color.

If the problem is not resolved, turn off the power and clean the print head deeply again after 24 hours.

If the problem is still not resolved, the print head may be damaged. Contact your nearest Canon service center to request a repair.

Aligning the Print Head

If printed ruled lines are misaligned or print results are otherwise unsatisfactory, adjust the print head position.

Note

- If the remaining ink level is low, the print head alignment sheet will not be printed correctly.

  Replace the ink tank whose ink is low.
- If ink runs out as the print head alignment sheet is printed, an error message appears on the LCD.

  An Error Occurs

You need to prepare: two sheets of A4 or Letter-sized plain paper

1. Check that printer is turned on.

2. Load two sheets of A4 or Letter-sized plain paper in cassette.

   Loading Paper in the Cassette

3. Press the **Setup** button, use the ◄ ► button to select **Maintenance**, and press the **OK** button.

   LCD and Operation Panel

4. Use the ◄ ► button to select **Head alignment** and then press the **OK** button.

   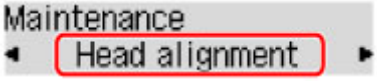

   The print head alignment sheet is printed, and the print head is aligned automatically.

   This takes about 3 to 4 minutes.

   Note

   - If automatic print head alignment fails, an error message appears on the LCD.

     An Error Occurs

Note

- For Windows, when the print results are still not satisfactory after adjusting the print head position as described above, adjust the print head position manually from the computer.

  Adjusting the Print Head Position Manually
- To print and check the current head position adjustment values, select **Print align value** on the **Maintenance** screen.

Cleaning

- Cleaning Exterior Surfaces
- Cleaning Paper Feed Rollers
- Cleaning Inside the Printer (Bottom Plate Cleaning)
- Cleaning Cassette Pads

Cleaning Paper Feed Rollers

If the paper feed roller is dirty or paper powder is attached to it, paper may not be fed properly.

In this case, clean the paper feed roller. Cleaning will wear out the paper feed roller, so perform this only when necessary.

You need to prepare: three sheets of A4 or Letter-sized plain paper

1. Check that printer is turned on.

2. Remove any paper from paper source to clean rollers.

   Note

   - If a message appears on the screen, check it and then press the **OK** button.

3. Press the **Setup** button, use the ◄ ► button to select **Maintenance**, and press the **OK** button.

   LCD and Operation Panel

4. Clean the paper feed rollers without paper.

   1. Use ◄ ► button to select **Roller Cleaning** and press **OK** button.

      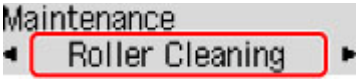

   2. Use ◄ ► button to select paper source (**Cassette** or **Rear tray**) to clean rollers and press **OK** button.

      The paper feed roller will rotate as it is cleaned without paper.

5. Clean the paper feed rollers with paper.

   1. Make sure paper feed rollers have stopped rotating, and then load three sheets of A4 or Letter-sized plain paper in paper source selected in step 4.

      Loading Paper in the Rear Tray
      Loading Paper in the Cassette

   2. Press the **OK** button.

      The printer starts cleaning. The cleaning will be complete when the paper is ejected.

If the problem is not resolved after cleaning the paper feed roller, contact your nearest Canon service center to request a repair.

Cleaning Inside the Printer (Bottom Plate Cleaning)

Remove stains from the inside of the printer. If the inside of the printer becomes dirty, printed paper may get dirty, so we recommend performing cleaning regularly.

You need to prepare: a sheet of A4 or Letter-sized plain paper*

* Be sure to use a new piece of paper.

1. Make sure that the power is turned on, then remove any paper from the cassette.

2. Prepare paper.

    1. Fold a single sheet of A4 or Letter-sized plain paper in half widthwise, then unfold the paper.

    2. Fold one side of the opened paper in another half, aligning the edge with the center crease, and then unfold the paper.

    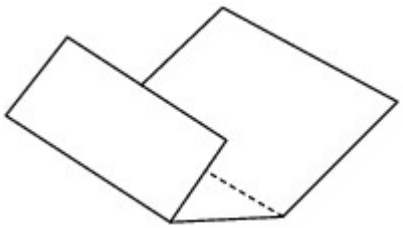

    3. Load only this sheet of paper in the cassette with the ridges of the creases facing up and the edge of the half with no crease facing to the far side.

    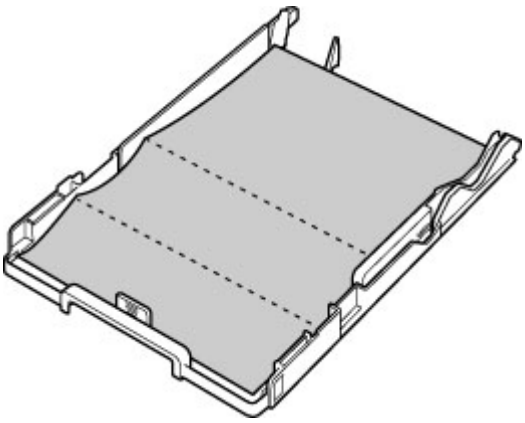

    4. Mount cassette cover (A) and insert the cassette into the printer.

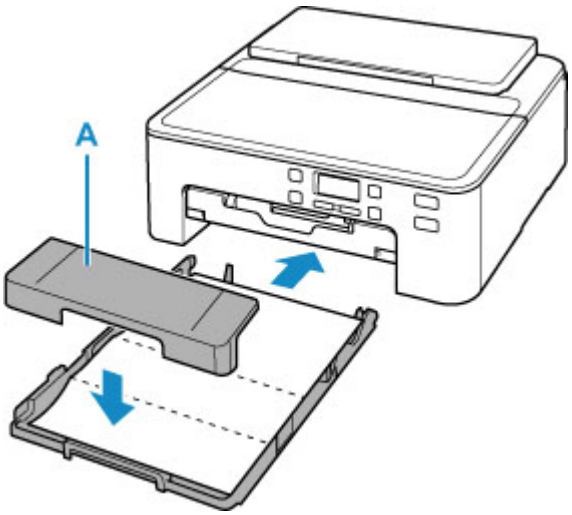

After inserting the cassette into the printer, the paper information registration screen is displayed on the LCD. Select **A4** or **Letter** for **Size:**.

5. Pull out paper output tray (B) and extend paper output support (C).

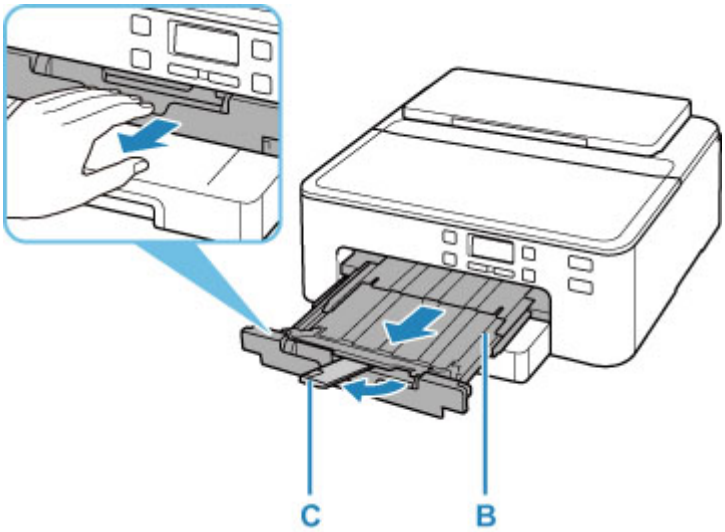

3. Press the **Setup** button, use the ◄ ► button to select **Maintenance**, and press the **OK** button.

LCD and Operation Panel

4. Use ◄ ► button to select **Btm Plate Cleaning** and press **OK** button.

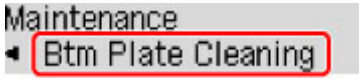

The paper cleans the inside of the printer as it feeds through the printer.

Check the folded parts of the ejected paper. If they are smudged with ink, perform Bottom Plate Cleaning again.

Note

- When performing Bottom Plate Cleaning again, be sure to use a new piece of paper.

If the problem is not resolved after performing cleaning again, the protrusions inside the printer may be stained. Wipe off any ink from the protrusions using a cotton swab or the like.

Important

- Before cleaning the printer, turn it off and unplug it.

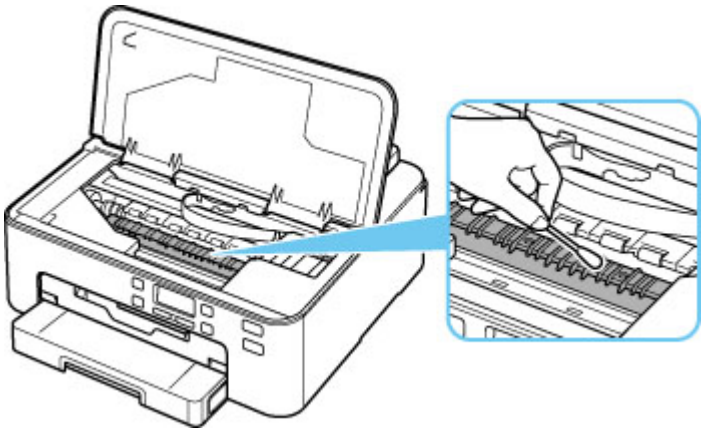

Overview

- **Safety**
  - Safety Precautions
  - Regulatory Information
  - WEEE (EU & EEA)
- **Handling Precautions**
  - Canceling Print Jobs
  - Legal Restrictions on Printing
  - Printer Handling Precautions
  - Transporting Your Printer
  - When Repairing, Lending, or Disposing of the Printer
  - Keeping Print Quality High
- **Main Components and Their Use**
  - Main Components
  - Power Supply
  - LCD and Operation Panel
  - Entering Numbers, Letters, and Symbols
- **Changing Settings**
  - Changing Printer Settings from Your Computer (Windows)
  - Changing Printer Settings from Your Computer (macOS)
  - Changing Settings from Operation Panel
- **Specifications**

Safety

- Safety Precautions
- Regulatory Information
- WEEE (EU&EEA)

Safety Precautions

Safety Precautions

- This manual contains important notices and safety precautions about your printer.

  Do not use the printer in ways other than described in the accompanying manuals, as this may result in fire, electric shock or other unexpected accidents.

  Safety standard marks and declarations are only valid for the supported voltages and frequencies in the applicable countries or regions.

⚠ Warning

- Users with cardiac pacemakers:

  This product emits a low-level magnetic flux. If you feel abnormalities, please move away from the product and consult your doctor.

- Do not use the printer in the following cases:

  Stop use immediately, unplug the printer and call your local service representative to request repair.

  - Metal objects or liquids are spilt inside the printer.
  - The printer emits smoke, strange odors, or makes unusual noises.
  - The power cord or plug overheat or are broken, bent or damaged in any way.

- Failure to adhere to the following may result in fire, electric shock, or injury:
  - Do not place product close to the flammable solvents such as alcohol or thinner.
  - Do not open or modify the printer.
  - Use only the power cord/cables that came with your printer. Do not use these cables with other devices.
  - Do not plug in to voltages or frequencies other than those specified.
  - Plug the power cord into the socket completely.
  - Do not plug in or unplug the power cord with wet hands.
  - Do not damage the power cord by twisting, bundling, tying, pulling or excessively bending it.
  - Do not place heavy objects on the power cord.
  - Do not connect multiple power cords to a single electrical outlet. Do not use multiple extension cords.
  - Do not leave the printer plugged in during lightning storms.
  - Always unplug the power cord and cables when cleaning. Do not use flammable sprays or liquids such as alcohol or thinners for cleaning.
  - Unplug the power cord once a month to check that it is not overheating, rusted, bent, scratched, split, or otherwise damaged.

⚠ Caution

- Do not put your hands inside the printer while printing.
- Do not touch the print head or other metal parts immediately after printing.
- Ink
  - Keep ink out of reach of children.
  - If ink is accidentally licked or swallowed, rinse out your mouth and drink one or two glasses of water. If irritation or discomfort occurs, obtain medical advice immediately.

- In case ink gets in contact with eyes, rinse with water immediately. In case ink gets in contact with skin, wash with soap and water immediately. If irritation to eyes or skin persists, obtain medical advice immediately.

- Moving the printer
  - Do not hold the printer by the cassette. Hold the printer by its sides and carry it with both hands.

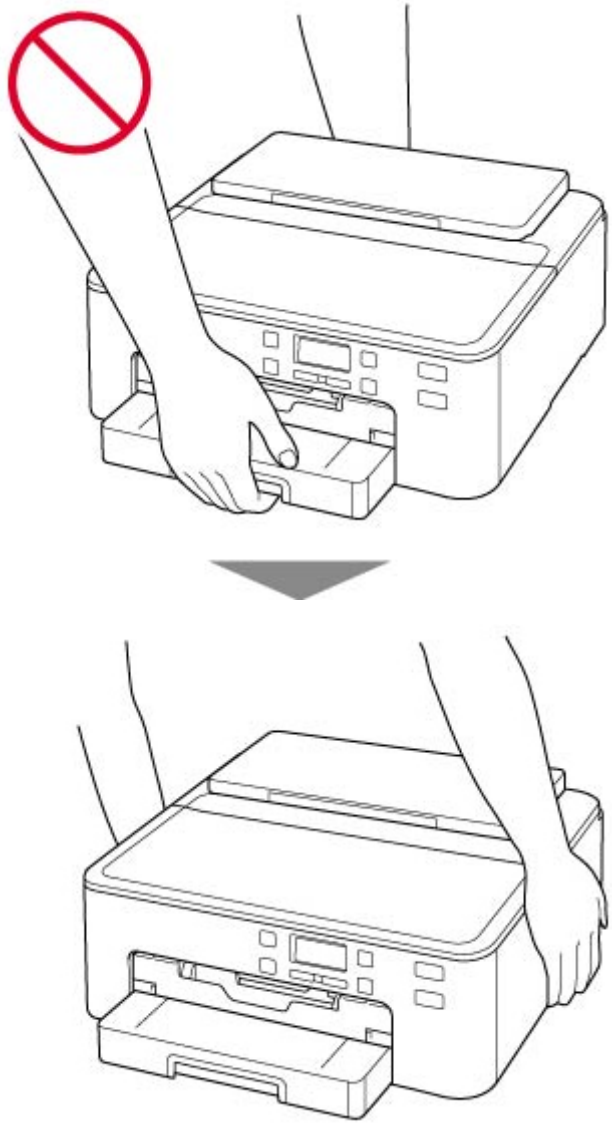

General Notices

Choosing a Location

Refer to "Specifications" in the Online manual for details on operating environment.

- Do not install the printer in a location that is unstable or subject to excessive vibration.
- Do not install the printer in locations that get very hot (direct sunlight, or close to a heating source), very humid or dusty locations, or outdoors.
- Do not place the printer on a thick rug or carpet.
- Do not place the printer flush against a wall.

Power Supply

- Keep the area around the power outlet clear at all times so you can easily unplug the power cord if necessary.
- Never remove the plug by pulling on the cord.

General Notices

- Do not tilt the printer, stand it on end, or turn it upside down. This may cause ink to leak.
- Do not place anything on top of the printer. Be especially careful to avoid metal objects such as paper clips and staples, and containers holding flammable liquids such as alcohol or thinner.
- Do not attempt to open, disassemble or modify the ink tanks. Ink may leak and damage your printer.
- Do not throw print heads or ink tanks in the fire.

Regulatory Information

Users in the U.S.A.

FCC Notice (U.S.A. Only)
For 120V, 60Hz model
Model Number: K10492 (Contains FCC Approved WLAN Module K30365, FCC Approved Bluetooth K30375)

This device complies with Part 15 of the FCC Rules. Operation is subject to the following two conditions: (1) This device may not cause harmful interference, and (2) this device must accept any interference received, including interference that may cause undesired operation.

Note: This equipment has been tested and found to comply with the limits for a Class B digital device, pursuant to Part 15 of the FCC Rules. These limits are designed to provide reasonable protection against harmful interference in a residential installation. This equipment generates, uses and can radiate radio frequency energy and, if not installed and used in accordance with the instructions, may cause harmful interference to radio communications.
However, there is no guarantee that interference will not occur in a particular installation. If this equipment does cause harmful interference to radio or television reception, which can be determined by turning the equipment off and on, the user is encouraged to try to correct the interference by one or more of the following measures:

- Reorient or relocate the receiving antenna.
- Increase the separation between the equipment and receiver.
- Connect the equipment into an outlet on a circuit different from that to which the receiver is connected.
- Consult the dealer or an experienced radio/TV technician for help.

Use of a shielded cable is required to comply with Class B limits in Subpart B of Part 15 of the FCC Rules.

Do not make any changes or modifications to the equipment unless otherwise specified in the manual. If such changes or modifications should be made, you could be required to stop operation of the equipment.

FCC ID:AZDK30365, AZDK30375

Changes or modifications not expressly approved by the party responsible for compliance could void the user's authority to operate equipment.

This transmitter must not be co-located or operating in conjunction with any other antenna or transmitter.

The equipment complies with FCC radiation exposure limits for at uncontrolled equipment. This equipment should be installed and operated with minimum distance at least 20cm between the radiator and persons body (excluding extremities: hands, wrists, feet and ankles) and must not be colocated or operated with any other antenna or transmitter.

Canon U.S.A., Inc.
One Canon Park
Melville, New York 11747
1-800-652-2666

Interference

Do not use the printer around medical equipment or other electronic devices. Signals from the printer may interfere with the correct operation of these devices.

WEEE (EU&EEA)

Only for European Union and EEA (Norway, Iceland and Liechtenstein)

This symbol indicates that this product is not to be disposed of with your household waste, according to the WEEE Directive (2012/19/EU) and national legislation. This product should be handed over to a designated collection point, e.g., on an authorized one-for-one basis when you buy a new similar product or to an authorized collection site for recycling waste electrical and electronic equipment (EEE). Improper handling of this type of waste could have a possible negative impact on the environment and human health due to potentially hazardous substances that are generally associated with EEE. At the same time, your cooperation in the correct disposal of this product will contribute to the effective usage of natural resources. For more information about where you can drop off your waste equipment for recycling, please contact your local city office, waste authority, approved WEEE scheme or your household waste disposal service. For more information regarding return and recycling of WEEE products, please visit www.canon-europe.com/weee.

Nur für Europäische Union und EWR (Norwegen, Island und Liechtenstein)

Dieses Symbol weist darauf hin, dass dieses Produkt gemäß der EU-Richtlinie über Elektro- und Elektronik-Altgeräte (2012/19/EU) und nationalen Gesetzen nicht über den Hausmüll entsorgt werden darf. Dieses Produkt muss bei einer dafür vorgesehenen Sammelstelle abgegeben werden. Dies kann z. B. durch Rückgabe beim Kauf eines ähnlichen Produkts oder durch Abgabe bei einer autorisierten Sammelstelle für die Wiederaufbereitung von Elektro- und Elektronik-Altgeräten geschehen. Der unsachgemäße Umgang mit Altgeräten kann aufgrund potentiell gefährlicher Stoffe, die generell mit Elektro- und Elektronik-Altgeräten in Verbindung stehen, negative Auswirkungen auf die Umwelt und die menschliche Gesundheit haben. Durch die umweltgerechte Entsorgung dieses Produkts tragen Sie außerdem zu einer effektiven Nutzung natürlicher Ressourcen bei. Informationen zu Sammelstellen für Altgeräte erhalten Sie bei Ihrer Stadtverwaltung, dem öffentlich-rechtlichen Entsorgungsträger, einer autorisierten Stelle für die Entsorgung von Elektro- und Elektronik-Altgeräten oder Ihrem örtlichen Entsorgungsunternehmen. Weitere Informationen zur Rückgabe und Entsorgung von Elektro- und Elektronik-Altgeräten finden Sie unter www.canon-europe.com/weee.

Union Européenne, Norvège, Islande et Liechtenstein uniquement.

Ce symbole indique que ce produit ne doit pas être jeté avec les ordures ménagères, conformément à la directive DEEE (2012/19/UE) et à la réglementation de votre pays. Ce produit doit être confié au distributeur à chaque fois que vous achetez un produit neuf similaire, ou à un point de collecte mis en place par les collectivités locales pour le recyclage des Déchets des Équipements Électriques et Électroniques (DEEE). Le traitement inapproprié de ce type de déchet risque d'avoir des répercussions sur l'environnement et la santé humaine, du fait de la présence de substances potentiellement dangereuses généralement associées aux équipements électriques et électroniques. Parallèlement, votre entière coopération dans le cadre de la mise au rebut correcte de ce produit favorisera une meilleure utilisation des ressources naturelles. Pour plus d'informations sur les points de collecte des équipements à recycler, contactez vos services municipaux, les autorités locales compétentes, le plan DEEE approuvé ou le service d'enlèvement des ordures ménagères. Pour plus d'informations sur le retour et le recyclage des produits DEEE, consultez le site: www.canon-europe.com/weee.

Uitsluitend bestemd voor de Europese Unie en EER (Noorwegen, IJsland en Liechtenstein)

Dit symbool geeft aan dat dit product in overeenstemming met de AEEA-richtlijn (2012/19/EU) en de nationale wetgeving niet mag worden afgevoerd met het huishoudelijk afval. Dit product moet worden ingeleverd bij een aangewezen, geautoriseerd inzamelpunt, bijvoorbeeld wanneer u een nieuw gelijksoortig product aanschaft, of bij een geautoriseerd inzamelpunt voor hergebruik van elektrische en elektronische apparatuur (EEA). Een onjuiste afvoer van dit type afval kan leiden tot negatieve effecten op het milieu en de volksgezondheid als gevolg van potentieel gevaarlijke stoffen die veel voorkomen in elektrische en elektronische apparatuur (EEA). Bovendien werkt u door een juiste afvoer van dit product mee aan het effectieve gebruik van natuurlijke hulpbronnen. Voor meer informatie over waar u uw afgedankte apparatuur kunt inleveren voor recycling kunt u contact opnemen met het gemeentehuis in uw woonplaats, de reinigingsdienst, of het afvalverwerkingsbedrijf. U kunt ook het schema voor de afvoer van afgedankte elektrische en elektronische apparatuur (AEEA) raadplegen. Ga voor meer informatie over het inzamelen en recyclen van afgedankte elektrische en elektronische apparatuur naar www.canon-europe.com/weee.

Sólo para la Unión Europea y el Área Económica Europea (Noruega, Islandia y Liechtenstein)

Este símbolo indica que este producto no debe desecharse con los desperdicios domésticos, de acuerdo con la directiva RAEE (2012/19/UE) y con la legislación nacional. Este producto debe entregarse en uno de los puntos de recogida designados, como por ejemplo, entregándolo en el lugar de venta al comprar un producto similar o depositándolo en un lugar de recogida autorizado para el reciclado de residuos de aparatos eléctricos y electrónicos (RAEE). La manipulación inapropiada de este tipo de desechos podría tener un impacto negativo en el entorno y la salud humana, debido a las sustancias potencialmente

peligrosas que normalmente están asociadas con los RAEE. Al mismo tiempo, su cooperación a la hora de desechar correctamente este producto contribuirá a la utilización eficazde los recursos naturales. Para más información sobre cómo puede eliminar el equipo para su reciclado, póngase en contacto con las autoridades locales, con las autoridades encargadas de los desechos, con un sistema de gestión RAEE autorizado o con el servicio de recogida de basuras doméstico. Si desea más información acerca de la devolución y reciclado de RAEE, visite la web www.canon-europe.com/weee.

Només per a la Unió Europea i a l'Espai Econòmic Europeu (Noruega, Islàndia i Liechtenstein)

Aquest símbol indica que aquest producte no s'ha de llençar a les escombraries de la llar, d'acord amb la Directiva RAEE (2012/19/UE) i la legislació nacional. Aquest producte s'hauria de lliurar en un dels punts de recollida designats, com per exemple, intercanviant-lo un per un en comprar un producte similar o lliurant-lo en un lloc de recollida autoritzat per al reciclatge de residus d'aparells elèctrics i electrònics (AEE). La manipulació inadequada d'aquest tipus de residus podria tenir un impacte negatiu en l'entorn i en la salut humana, a causa de les substàncies potencialment perilloses que normalment estan associades als AEE. Així mateix, la vostra cooperació a l'hora de llençar correctament aquest producte contribuirà a la utilització efectiva dels recursos naturals. Per a més informació sobre els punts on podeu lliurar aquest producte per procedir al seu reciclatge, adreceu-vos a la vostra oficina municipal, a les autoritats encarregades dels residus, al pla de residus homologat per la RAEE o al servei de recollida de deixalles domèstiques de la vostra localitat. Per a més informació sobre la devolució i el reciclatge de productes RAEE, visiteu www.canon-europe.com/weee.

Solo per Unione Europea e SEE (Norvegia, Islanda e Liechtenstein)

Questo simbolo indica che il prodotto deve essere oggetto di raccolta separata in conformità alla Direttiva RAEE (2012/19/UE) e alla normativa locale vigente. Il prodotto deve essere smaltito presso un centro di raccolta differenziata, un distributore autorizzato che applichi il principio dell'"uno contro uno", ovvero del ritiro della vecchia apparecchiatura elettrica al momento dell'acquisto di una nuova, o un impianto autorizzato al riciclaggio dei rifiuti di apparecchiature elettriche ed elettroniche. La gestione impropria di questo tipo di rifiuti può avere un impatto negativo sull'ambiente e sulla salute umana causato dalle sostanze potenzialmente pericolose che potrebbero essere contenute nelle apparecchiature elettriche ed elettroniche. Un corretto smaltimento di tali prodotti contribuirà inoltre a un uso efficace delle risorse naturali ed eviterà di incorrere nelle sanzioni amministrative di cui all'art. 255 e successivi del Decreto Legislativo n. 152/06. Per ulteriori informazioni sullo smaltimento e il recupero dei Rifiuti di Apparecchiature Elettriche ed Elettroniche, consultare la Direttiva RAEE, rivolgersi alle autorità competenti, oppure visitare il sito www.canon-europe.com/weee.

Apenas para a União Europeia e AEE (Noruega, Islândia e Liechtenstein)

Este símbolo indica que o produto não deve ser colocado no lixo doméstico, de acordo com a Directiva REEE (2012/19/UE) e a legislação nacional. Este produto deverá ser colocado num ponto de recolha designado, por exemplo, num local próprio autorizado quando adquirir um produto semelhante novo ou num local de recolha autorizado para reciclar resíduos de equipamentos eléctricos e electrónicos (EEE). O tratamento inadequado deste tipo de resíduo poderá causar um impacto negativo no ambiente e na saúde humana devido às substâncias potencialmente perigosas normalmente associadas aos equipamentos eléctricos e electrónicos. Simultaneamente, a sua cooperação no tratamento correcto deste produto contribuirá para a utilização eficaz dos recursos naturais. Para mais informações sobre os locais onde o equipamento poderá ser reciclado, contacte os serviços locais, a autoridade responsável pelos resíduos, o esquema REEE aprovado ou o serviço de tratamento de lixo doméstico. Para mais informações sobre a devolução e reciclagem de produtos REEE, vá a www.canon-europe.com/weee.

Gælder kun i Europæiske Union og EØS (Norge, Island og Liechtenstein)

Dette symbol angiver, at det pågældende produkt ikke må bortskaffes sammen med dagrenovation jf. direktivet om affald af elektrisk og elektronisk udstyr (WEEE) (2012/19/EU) og gældende national lovgivning. Det pågældende produkt skal afleveres på et nærmere specificeret indsamlingssted, f.eks. i overensstemmelse med en godkendt én-til-én-procedure, når du indkøber et nyt tilsvarende produkt, eller produktet skal afleveres på et godkendt indsamlingssted for elektronikaffald. Forkert håndtering af denne type affald kan medføre negative konsekvenser for miljøet og menneskers helbred på grund af de potentielt sundhedsskadelige stoffer, der generelt kan forefindes i elektrisk og elektronisk udstyr. Når du foretager korrekt bortskaffelse af det pågældende produkt, bidrager du til effektiv brug af naturressourcerne. Yderligere oplysninger om, hvor du kan bortskaffe dit elektronikaffald med henblik på genanvendelse, får du hos de kommunale renovationsmyndigheder. Yderligere oplysninger om returnering og genanvendelse af affald af elektrisk og elektronisk udstyr får du ved at besøge www.canon-europe.com/weee.

Μόνο για την Ευρωπαϊκή Ένωση και τον ΕΟΧ (Νορβηγία, Ισλανδία και Λιχτενστάιν)

Αυτό το σύμβολο υποδηλώνει ότι αυτό το προϊόν δεν πρέπει να απορρίπτεται μαζί με τα οικιακά απορρίμματα, σύμφωνα με την Οδηγία σχετικά με τα Απόβλητα Ηλεκτρικού και Ηλεκτρονικού Εξοπλισμού (ΑΗΗΕ) (2012/19/ΕΕ) και την εθνική σας νομοθεσία. Αυτό το προϊόν πρέπει να παραδίδεται σε καθορισμένο σημείο συλλογής, π.χ. σε μια εξουσιοδοτημένη βάση ανταλλαγής όταν αγοράζετε ένα νέο παρόμοιο προϊόν ή σε μια εξουσιοδοτημένη θέση συλλογής για την ανακύκλωση των αποβλήτων Ηλεκτρικού και Ηλεκτρονικού Εξοπλισμού (ΗΗΕ). Ο ακατάλληλος χειρισμός αυτού του τύπου αποβλήτων μπορεί να έχει αρνητικό αντίκτυπο στο περιβάλλον και την υγεία του ανθρώπου, λόγω δυνητικώς επικίνδυνων ουσιών που γενικά συνδέονται με τον ΗΗΕ. Ταυτόχρονα, η συνεργασία σας όσον αφορά τη σωστή απόρριψη αυτού του προϊόντος θα συμβάλει στην αποτελεσματική χρήση των φυσικών πόρων. Για περισσότερες πληροφορίες σχετικά με τα σημεία όπου μπορείτε να απορρίψετε τον εξοπλισμό σας για ανακύκλωση, επικοινωνήστε με το τοπικό γραφείο της πόλης σας, την υπηρεσία απορριμμάτων, το εγκεκριμένο σχήμα ΑΗΗΕ ή την υπηρεσία απόρριψης οικιακών αποβλήτων. Για περισσότερες πληροφορίες σχετικά με την επιστροφή και την ανακύκλωση των προϊόντων ΑΗΗΕ, επισκεφθείτε την τοποθεσία www.canon-europe.com/weee.

Gjelder kun den europeiske union og EØS (Norge, Island og Liechtenstein)

Dette symbolet indikerer at dette produktet ikke skal kastes sammen med husholdningsavfall, i henhold til WEEE-direktiv (2012/19/EU) og nasjonal lov. Produktet må leveres til et dertil egnet innsamlingspunkt, det vil si på en autorisert en-til-en-basis når du kjøper et nytt lignende produkt, eller til et autorisert innsamlingssted for resirkulering av avfall fra elektrisk og elektronisk utstyr (EE-utstyr). Feil håndtering av denne typen avfall kan være miljø- og helseskadelig på grunn av potensielt skadelige stoffer som ofte brukes i EE-utstyr. Samtidig bidrar din innsats for korrekt avhending av produktet til effektiv bruk av naturressurser. Du kan få mer informasjon om hvor du kan avhende utrangert utstyr til resirkulering ved å kontakte lokale myndigheter, et godkjent WEEE-program eller husholdningens renovasjonsselskap. Du finner mer informasjon om retur og resirkulering av WEEE-produkter på www.canon-europe.com/weee.

Vain Euroopan unionin sekä ETA:n (Norja, Islanti ja Liechtenstein) alueelle.

Tämä tunnus osoittaa, että sähkö- ja elektroniikkalaiteromua koskeva direktiivi (SER-direktiivi, 2012/19/EU) sekä kansallinen lainsäädäntö kieltävät tuotteen hävittämisen talousjätteen mukana. Tuote on vietävä asianmukaiseen keräyspisteeseen, esimerkiksi kodinkoneliikkeeseen uutta vastaavaa tuotetta ostettaessa tai viralliseen sähkö- ja elektroniikkalaiteromun keräyspisteeseen. Sähkö- ja elektroniikkalaiteromun virheellinen käsittely voi vahingoittaa ympäristöä ja ihmisten terveyttä, koska laitteet saattavat sisältää ympäristölle ja terveydelle haitallisia aineita. Lisäksi tuotteen asianmukainen hävittäminen säästää luonnonvaroja. Lisätietoja sähkö- ja elektroniikkalaiteromun keräyspisteistä saat kaupunkien ja kuntien tiedotuksesta, jätehuoltoviranomaisilta, sähkö- ja elektroniikkalaiteromun

kierrätysjärjestelmän ylläpitäjältä ja jätehuoltoyhtiöltä. Lisätietoja sähkö- ja elektroniikkalaiteromun keräyksestä ja kierrätyksestä on osoitteessa www.canon-europe.com/weee.

Endast för Europeiska unionen och EES (Norge, Island och Liechtenstein)

Den här symbolen visar att produkten enligt WEEE-direktivet (2012/19/EU) och nationell lagstiftning inte får sorteras och slängas som hushållsavfall. Den här produkten ska lämnas in på en därför avsedd insamlingsplats, t.ex. på en återvinningsstation auktoriserad att hantera elektrisk och elektronisk utrustning (EE-utrustning) eller hos handlare som är auktoriserade att byta in varor då nya, motsvarande köps (en mot en). Olämplig hantering av avfall av den här typen kan ha en negativ inverkan på miljön och människors hälsa på grund av de potentiellt farliga ämnen som kan återfinnas i elektrisk och elektronisk utrustning. Din medverkan till en korrekt avfallshantering av den här produkten bidrar dessutom till en effektiv användning av naturresurserna. Kontakta ditt lokala kommunkontor, berörd myndighet, företag för avfallshantering eller ta del av en godkänd WEEE-organisation om du vill ha mer information om var du kan lämna den kasserade produkten för återvinning. För mer information om inlämning och återvinning av WEEE-produkter, se www.canon-europe.com/weee.

Pouze Evropská unie a EHP (Norsko, Island a Lichtenštejnsko)

Tento symbol znamená, že podle směrnice o OEEZ (2012/19/EU) a podle vnitrostátních právních předpisů nemá být tento výrobek likvidován s odpadem z domácností. Tento výrobek má být vrácen do sběrného místa, např. v rámci autorizovaného systému odběru jednoho výrobku za jeden nově prodaný podobný výrobek nebo v autorizovaném sběrném místě pro recyklaci odpadních elektrických a elektronických zařízení (OEEZ). Nevhodné nakládání s tímto druhem odpadu by mohlo mít negativní dopad na životní prostředí a lidské zdraví, protože elektrická a elektronická zařízení zpravidla obsahují potenciálně nebezpečné látky. Vaše spolupráce na správné likvidaci tohoto výrobku současně napomůže efektivnímu využívání přírodních zdrojů. Další informace o místech sběru vašeho odpadního zařízení k recyklaci vám sdělí místní úřad vaší obce, správní orgán vykonávající dozor nad likvidací odpadu, sběrny OEEZ nebo služba pro odvoz komunálního odpadu. Další informace týkající se vracení a recyklace OEEZ naleznete na adrese www.canon-europe.com/weee.

Csak az Európai Unió és az EGT (Norvégia, Izland és Liechtenstein) országaiban

Ez a szimbólum azt jelzi, hogy a helyi törvények és a WEEE-irányelv (2012/19/EU) szerint a termék nem kezelhető háztartási hulladékként. A terméket a kijelölt nyilvános gyűjtőpontokon kell leadni, például hasonló cserekészülék vásárlásakor, illetve bármelyik, elektromos és elektronikai berendezésekből származó hulladék (WEEE) átvételére feljogosított gyűjtőponton. Az ilyen jellegű hulladékok a nem megfelelő kezelés esetén a bennük található veszélyes anyagok révén ártalmasak lehetnek a környezetre és az emberek egészségére. Továbbá, a termékből származó hulladék megfelelő kezelésével hozzájárulhat a természetes nyersanyagok hatékonyabb hasznosításához. A berendezésekből származó, újrahasznosítható hulladékok elhelyezésére vonatkozó további tudnivalókért forduljon a helyi önkormányzathoz, a közterület-fenntartó vállalathoz, a háztartási hulladék begyűjtését végző vállalathoz, illetve a hivatalos WEEE-képviselethez. További tudnivalókat a WEEE-termékek visszajuttatásáról és újrahasznosításáról a www.canon-europe.com/weee.

Tylko dla krajów Unii Europejskiej oraz EOG (Norwegia, Islandia i Liechtenstein)

Ten symbol oznacza, że zgodnie z dyrektywą WEEE dotyczącą zużytego sprzętu elektrycznego i elektronicznego (2012/19/UE) oraz przepisami lokalnymi nie należy wyrzucać tego produktu razem z odpadami gospodarstwa domowego. Produkt należy przekazać do wyznaczonego punktu gromadzenia odpadów, np. firmie, od której kupowany jest nowy, podobny produkt lub do autoryzowanego punktu gromadzenia zużytego sprzętu elektrycznego i elektronicznego w celu poddania go recyklingowi. Usuwanie tego typu odpadów w nieodpowiedni sposób może mieć negatywny wpływ na otoczenie i zdrowie innych osób ze względu na niebezpieczne substancje stosowane w takim sprzęcie. Jednocześnie pozbycie się zużytego sprzętu w zalecany sposób przyczynia się do właściwego wykorzystania zasobów naturalnych. Aby uzyskać więcej informacji na temat punktów, do których można dostarczyć sprzęt do recyklingu, prosimy skontaktować się z lokalnym urzędem miasta, zakładem utylizacji odpadów, skorzystać z instrukcji zatwierdzonej dyrektywą WEEE lub skontaktować się z przedsiębiorstwem zajmującym się wywozem odpadów domowych. Więcej informacji o zwracaniu i recyklingu zużytego sprzętu elektrycznego i elektronicznego znajduje się w witrynie www.canon-europe.com/weee.

Platí len pre štáty Európskej únie a EHP (Nórsko, Island a Lichtenštajnsko)

Tento symbol znamená, že podľa Smernice 2012/19/EÚ o odpade z elektrických a elektronických zariadení (OEEZ) a podľa platnej legislatívy Slovenskej republiky sa tento produkt nesmie likvidovať spolu s komunálnym odpadom. Produkt je potrebné odovzdať do určenej zberne, napr. prostredníctvom výmeny za kúpu nového podobného produktu, alebo na autorizované zberné miesto, ktoré spracúva odpad z elektrických a elektronických zariadení (EEZ). Nesprávna manipulácia s takýmto typom odpadu môže mať negatívny vplyv na životné prostredie a ľudské zdravie, pretože elektrické a elektronické zariadenia obsahujú potenciálne nebezpečné látky. Spoluprácou na správnej likvidácii produktu prispejete

k účinnému využívaniu prírodných zdrojov. Ďalšie informácie o mieste recyklácie opotrebovaných zariadení získate od miestneho úradu, úradu životného prostredia, zo schváleného plánu OEEZ alebo od spoločnosti, ktorá zaisťuje likvidáciu komunálneho odpadu. Viac informácií nájdete aj na webovej stránke: www.canon-europe.com/weee.

Üksnes Euroopa Liit ja EMP (Norra, Island ja Liechtenstein)

See sümbol näitab, et antud toodet ei tohi vastavalt elektri- ja elektroonikaseadmete jäätmeid käsitlevale direktiivile (2012/19/EL) ning teie riigis kehtivatele õigusaktidele utiliseerida koos olmejäätmetega. Antud toode tuleb anda selleks määratud kogumispunkti, nt müügipunkt, mis on volitatud üks ühe vastu vahetama, kui ostate uue sarnase toote, või elektri- ja elektroonikaseadmete jäätmete ümbertöötlemiseks mõeldud kogumispunkti. Täiendava teabe saamiseks elektri- ja elektroonikaseadmetest tekkinud jäätmete tagastamise ja ümbertöötlemise kohta võtke ühendust kohaliku omavalitsusega, asjakohase valitsusasutusega, asjakohase tootjavastutusorganisatsiooniga või olmejäätmete käitlejaga. Lisateavet leitate ka Interneti-leheküljelt www.canon-europe.com/weee.

Tikai Eiropas Savienībai un EEZ (Norvēģijai, Islandei un Lihtenšteinai)

Šis simbols norāda, ka atbilstoši ES Direktīvai (2012/19/ES) par elektrisko un elektronisko iekārtu atkritumiem (EEIA) un vietējiem tiesību aktiem no šī izstrādājuma nedrīkst atbrīvoties, izmetot to kopā ar sadzīves atkritumiem. Šis izstrādājums ir jānodod piemērotā savākšanas vietā, piemēram, apstiprinātā veikalā, kur iegādājaties līdzīgu jaunu produktu un atstājat veco, vai apstiprinātā vietā izlietotu elektrisko un elektronisko iekārtu pārstrādei. Nepareiza šāda veida atkritumu apsaimniekošana var apdraudēt vidi un cilvēka veselību tādu iespējami bīstamu vielu dēļ, kas parasti ir elektriskajās un elektroniskajās iekārtās. Turklāt jūsu atbalsts pareizā šāda veida atkritumu apsaimniekošanā sekmēs efektīvu dabas resursu izmantošanu. Lai saņemtu pilnīgāku informāciju par vietām, kur izlietoto iekārtu var nodot pārstrādei, sazinieties ar vietējo pašvaldību, atkritumu savākšanas atbildīgo dienestu, pilnvarotu EEIA struktūru vai sadzīves atkritumu apsaimniekošanas iestādi. Lai saņemtu plašāku informāciju par elektrisko un elektronisko iekārtu nodošanu pārstrādei, apmeklējiet tīmekļa vietni www.canon-europe.com/weee.

Tik Europos Sąjungai ir EEE (Norvegijai, Islandijai ir Lichtenšteinui)

Šis ženklas reiškia, kad gaminio negalima išmesti su buitinėmis atliekomis, kaip yra nustatyta Direktyvoje (2012/19/ES) ir nacionaliniuose teisė aktuose dėl EEĮ atliekų tvarkymo. Šį gaminį reikia atiduoti į tam skirtą surinkimo punktą, pvz., pagal patvirtintą keitimo sistemą, kai perkamas panašus gaminys, arba į

elektros ir elektroninės įrangos (EEĮ) atliekų perdirbimo punktą. Netinkamas tokios rūšies atliekų tvarkymas dėl elektros ir elektroninėje įrangoje esančių pavojingų medžiagų gali pakenkti aplinkai ir žmonių sveikatai. Padėdami užtikrinti tinkamą šio gaminio šalinimo tvarką, kartu prisidėsite prie veiksmingo gamtos išteklių naudojimo. Jei reikia daugiau informacijos, kaip šalinti tokias atliekas, kad jos būtų toliau perdirbamos, kreipkitės į savo miesto valdžios institucijas, atliekų tvarkymo organizacijas, patvirtintų EEĮ atliekų sistemų arba jūsų buitinių atliekų tvarkymo įstaigų atstovus. Išsamesnės informacijos apie EEĮ atliekų grąžinimo ir perdirbimo tvarką galite rasti apsilankę tinklalapyje www.canon-europe.com/weee.

Samo za Evropsko unijo in EGP (Norveška, Islandija in Lihtenštajn)

Ta simbol pomeni, da tega izdelka v skladu z direktivo OEEO (2012/19/EU) in državno zakonodajo ne smete odvreči v gospodinjske odpadke. Ta izdelek morate odložiti na ustrezno zbiralno mesto, na primer pri pooblaščenem prodajalcu, ko kupite podoben nov izdelek ali na zbiralno mesto za recikliranje električne in elektronske opreme. Neprimerno ravnanje s takšnimi odpadki lahko negativno vpliva na okolje in človekovo zdravje zaradi nevarnih snovi, ki so povezane z električno in elektronsko opremo. S pravilno odstranitvijo izdelka hkrati prispevate tudi k učinkoviti porabi naravnih virov. Če želite več informacij o tem, kje lahko odložite odpadno opremo za recikliranje, pokličite občinski urad, komunalno podjetje ali službo, ki skrbi za odstranjevanje odpadkov, ali si oglejte načrt OEEO. Če želite več informacij o vračanju in recikliranju izdelkov v skladu z direktivo OEEO, obiščite www.canon-europe.com/weee.

Само за Европейския съюз и ЕИП (Норвегия, Исландия и Лихтенщайн)

Този символ показва, че този продукт не трябва да се изхвърля заедно с битовите отпадъци, съгласно Директивата за ИУЕЕО (2012/19/ЕС) и Вашето национално законодателство. Този продукт трябва да бъде предаден в предназначен за целта пункт за събиране, например на база размяна, когато купувате нов подобен продукт, или в одобрен събирателен пункт за рециклиране на излязло от употреба електрическо и електронно оборудване (ИУЕЕО). Неправилното третиране на този тип отпадъци може да доведе до евентуални отрицателни последствия за околната среда и човешкото здраве поради потенциално опасните вещества, които обикновено са свързани с ЕЕО. В същото време Вашето съдействие за правилното изхвърляне на този продукт ще допринесе за ефективното използване на природните ресурси. Повече информация относно местата, където може да предавате излязло от употреба оборудване за рециклиране, може да получите от местните власти, от органа, отговорен за отпадъците и от одобрена система за излязло от употреба ЕЕО или от Вашата местна служба за битови отпадъци. За повече информация относно връщането и рециклирането на продукти от излязло от употреба ЕЕО посетете www.canon-europe.com/weee.

Doar pentru Uniunea Europeană şi EEA (Norvegia, Islanda şi Liechtenstein)

Acest simbol indică faptul că acest produs nu trebuie aruncat o dată cu reziduurile menajere, în conformitate cu Directiva DEEE (Directiva privind deşeurile de echipamente electrice şi electronice) (2012/19/UE) şi legile naţionale. Acest produs trebuie transportat la un punct de colectare special, de exemplu un centru care preia produsele vechi atunci când achiziţionaţi un produs nou similar, sau la un punct de colectare autorizat pentru reciclarea deşeurilor provenite de la echipamentele electrice şi electronice (EEE). Mânuirea necorespunzătoare a acestor tipuri de deşeuri poate avea un impact negativ asupra mediului înconjurător şi sănătăţii indivizilor, din cauza substanţelor potenţial nocive care sunt în general asociate cu EEE. În acelaşi timp, cooperarea dvs. la reciclarea corectă a acestui produs va contribui la utilizarea efectivă a resurselor naturale. Pentru mai multe informaţii privind locurile de reciclare a deşeurilor provenite de la echipamente, contactaţi biroul primăriei locale, autoritatea responsabilă cu colectarea deşeurilor, schema DEEE aprobată sau serviciul de colectare a deşeurilor menajere. Pentru mai multe informaţii privind returnarea şi reciclarea produselor DEEE, vizitaţi www.canon-europe.com/weee.

Samo za Europsku uniju i EEZ (Norveška, Island i Lihtenštajn)

Ovaj simbol pokazuje da se ovaj proizvod ne smije odlagati s kućnim otpadom sukladno WEEE Direktivi (2012/19/EC) i vašem nacionalnom zakonu. Ovaj proizvod je potrebno predati na posebno mjesto za sakupljanje otpada, npr. na ovlašteno mjesto gdje možete zamijeniti staro za novo ukoliko kupujete novi sličan proizvod ili na ovlašteno mjesto za sakupljanje rabljene električne i elektroničke opreme (EEE) za recikliranje. Nepropisno rukovanje ovom vrstom otpada može imati negativan učinak na okolinu i zdravlje ljudi zbog supstanci koje su potencijalno opasne za zdravlje, a općenito se povezuju s EEE. Istovremeno, vaša će suradnja kroz propisno odlaganje ovog proizvoda doprinijeti efektivnoj uporabi prirodnih resursa. Za više informacija o tome gdje možete odložiti svoj otpad za recikliranje obratite se vašem lokalnom gradskom uredu, komunalnoj službi, odobrenom WEEE programu ili službi za odlaganje kućnog otpada. Ostale informacije o vraćanju i recikliranju WEEE proizvoda potražite na www.canon-europe.com/weee.

Korisnici u Srbiji

Ovaj simbol označava da ovaj proizvod ne sme da se odlaže sa ostalim kućnim otpadom, u skladu sa WEEE Direktivom (2012/19/EU) i nacionalnim zakonima. Ovaj proizvod treba predati određenom centru za prikupljanje, npr. na osnovi "jedan-za-jedan" kada kupujete sličan novi proizvod, ili ovlašćenom centru za prikupljanje za reciklažu istrošene električne i elektronske opreme (EEE). Nepravilno rukovanje ovom

vrstom otpada može da ima moguće negativne posledice po životnu sredinu i ljudsko zdravlje usled potencijalno opasnih materijala koji se uglavnom vezuju za EEE. U isto vreme, vaša saradnja na ispravnom odlaganju ovog proizvoda će doprineti efikasnom korišćenju prirodnih resursa. Za više informacija o tome gde možete da predate vašu staru opremu radi recikliranje, vas molimo, da kontaktirate lokalne gradske vlasti, komunalne službe, odobreni plan reciklaže ili Gradsku čistoću. Za više informacija o vraćanju i recikliranju WEEE proizvoda, posetite stranicu www.canon-europe.com/weee.

Handling Precautions

- Canceling Print Jobs
- Legal Restrictions on Printing
- Printer Handling Precautions
- Transporting Your Printer
- When Repairing, Lending, or Disposing of the Printer
- Keeping Print Quality High

Legal Restrictions on Printing

Printing or modifying printed copies of the following may be punishable under law.

This list is non-exhaustive. When in doubt, check with a local legal representative.

- Paper money
- Money orders
- Certificates of deposit
- Postage stamps (canceled or uncanceled)
- Identification badges or insignia
- Selective service or draft papers
- Checks or drafts issued by governmental agencies
- Motor vehicle licenses and certificates of title
- Traveler's checks
- Food stamps
- Passports
- Immigration papers
- Internal revenue stamps (canceled or uncanceled)
- Bonds or other certificates of indebtedness
- Stock certificates
- Copyrighted works or works of art, without the owner's consent

Printer Handling Precautions

Do not place any object on the top cover!

Do not place any object on the top cover. It will fall into the rear tray when the top cover is opened and cause the printer to malfunction. Also, place the printer where objects will not fall on it.

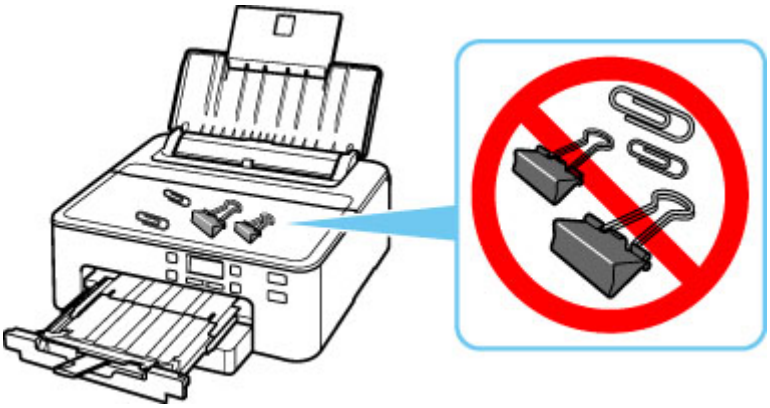

Transporting Your Printer

When relocating the printer for changing your living place or repairing it, make sure of the following.

Important

- Pack the printer in a sturdy box so that it is placed with its bottom facing down, using sufficient protective material to ensure safe transport.
- With the print head and ink tank left installed in the printer, press the **ON** button to turn off the power. This allows the printer to automatically cap the print head, thus preventing it from drying.
- After packing, do not tilt the box containing the printer or turn it on its side or upside down. Doing so may cause the ink to leak during transport and cause damage to the printer.
- When a shipping agent is handling transport of the printer, have its box marked "THIS SIDE UP" to keep the printer with its bottom facing down. Mark also with "FRAGILE" or "HANDLE WITH CARE".

1. Turn the printer off.

2. Check that **ON** lamp is off and unplug power cord.

   Important

   - Do not unplug the printer while the **ON** lamp is lit or flashing, as it may cause malfunction or damage to the printer, making the printer unable to print.

3. Retract paper output support and paper output tray.

4. Retract paper support extension, and then close paper support.

5. Unplug the printer cable from the computer and from the printer, then unplug the power cord from the printer.

6. Use adhesive tape to secure all the covers on the printer to keep them from opening during transportation. Then pack the printer in the plastic bag.

7. Attach the protective material to the printer when packing the printer in the box.

Important

- We recommend to hold and carry out this printer as shown in the figure below. If you hold the cassette, it may fall out of the printer.

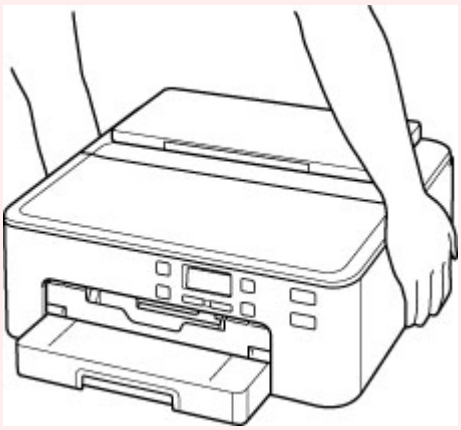

When Repairing, Lending, or Disposing of the Printer

If you have entered personal data, passwords and/or other security settings on the printer, such information may be stored in the printer.

When sending the printer for repair, lending or transferring the printer to another person, or disposing of the printer, please be sure to follow the steps below in order to delete such information and prevent third parties from accessing it.

- Press the **Setup** button, select **Device settings** > **Reset setting** > **All data**, and then select **Yes**.

Keeping Print Quality High

The key to printing with the optimal printing quality is to prevent the print head from drying or clogging. Always observe the following rules for optimal printing quality.

Note

- Depending on the type of paper, ink may blur if you trace the printed area with a highlight pen or paint-stick, or bleed if water or sweat comes in contact with the printed area.

Never unplug the power cord until the power is turned off!

If you press the **ON** button to turn off the power, the printer caps the print head (nozzles) automatically to prevent from drying. If you unplug the power cord from the wall outlet before the **ON** lamp is turned off, the print head will not be capped properly and this will cause drying or clogging.

When unplugging the power cord, check that the **ON** lamp is not lit.

Print periodically!

Just as the tip of a felt pen becomes dry and unusable if it has not been used for a long time, even if it is capped, the print head too, may become dried or clogged if the printer has not been used for a long time. We recommend you to use the printer at least once a month.

Main Components and Their Use

- Main Components
- Power Supply
- LCD and Operation Panel
- Entering Numbers, Letters, and Symbols

Main Components

- Front View
- Rear View
- Inside View
- Operation Panel

Front View

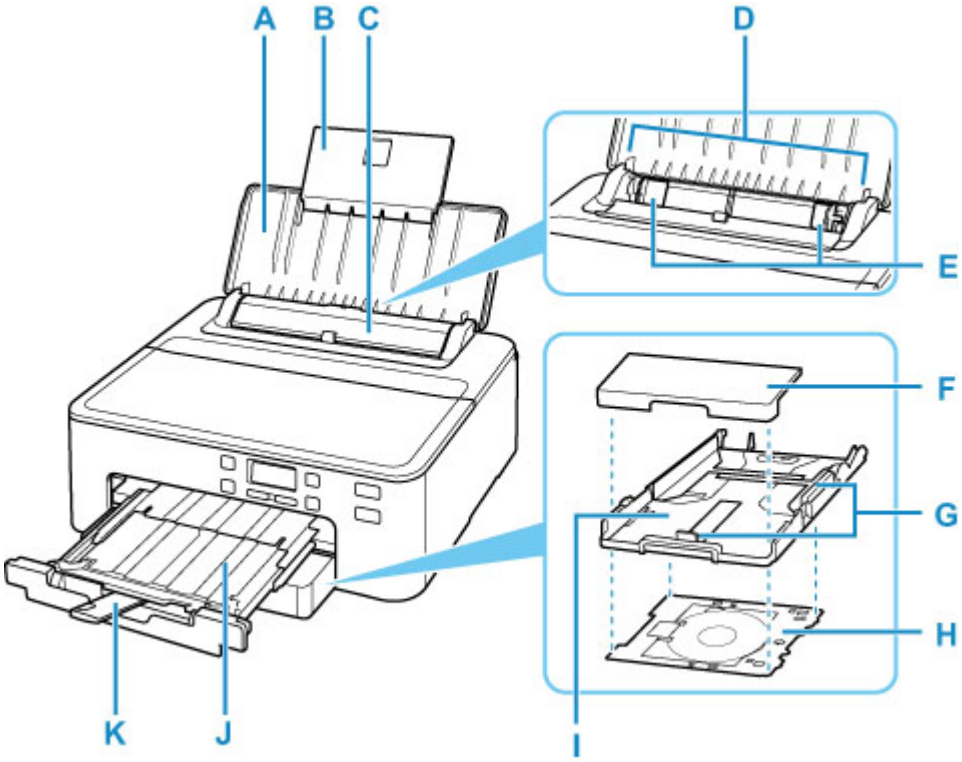

A: Paper Support

Open to load paper in the rear tray.

B: Paper Support Extension

Extend to load paper in the rear tray.

C: Feed Slot Cover

Prevents anything from falling into the feed slot.

Open it to slide the paper guides, and close it before printing.

D: Rear Tray

Load paper here. Two or more sheets of the same size and type of paper can be loaded at the same time, and fed automatically one sheet at a time.

- Loading Paper in the Rear Tray
- Loading Envelopes in Rear Tray

E: Paper Guides

Align with both sides of the paper stack.

F: Cassette Cover

Detach to load paper in the cassette.

G: Paper Guides

Align with right/left/front sides of the paper stack.

H: Multi-purpose Tray

Use when printing on printable discs and other media.

I: Cassette

Load A4, B5, A5, or Letter-sized plain paper into the cassette, and insert it into the printer.

Loading Paper in the Cassette

J: Paper Output Tray

Printed paper is ejected. Pull out it before printing.

When using the multi-purpose tray to print, insert the paper output tray all the way in by following the message.

K: Paper Output Support

Extend to support ejected paper.

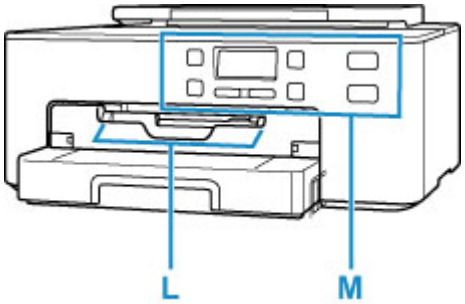

L: Multi-purpose Tray Guide

Place the multi-purpose tray here.

M: Operation Panel

Use to change the settings of the printer or to operate it.

Operation Panel

Rear View

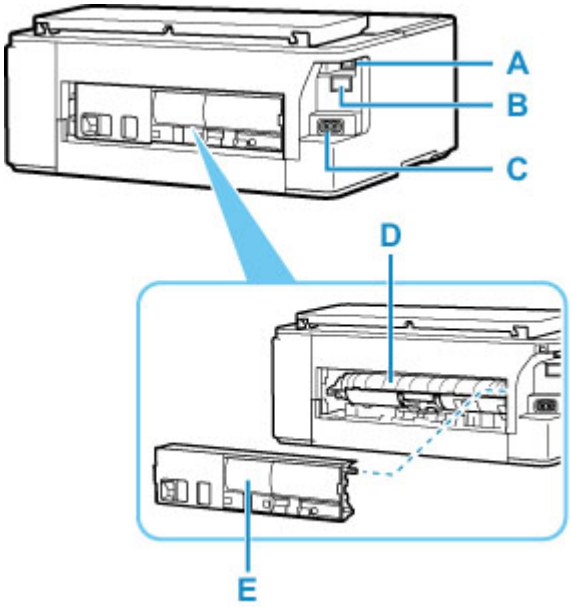

A: USB Port

Plug in the USB cable to connect the printer with a computer.

B: Wired LAN Connector

Plug in the LAN cable to connect the printer to a LAN.

C: Power Cord Connector

Plug in the supplied power cord.

D: Transport Unit Cover

Open when removing jammed paper.

E: Rear Cover

Detach when removing jammed paper.

Important

- Do not touch the metal casing.
- Do not plug in or unplug the USB cable or LAN cable while the printer is printing with the computer. This can cause trouble.

Inside View

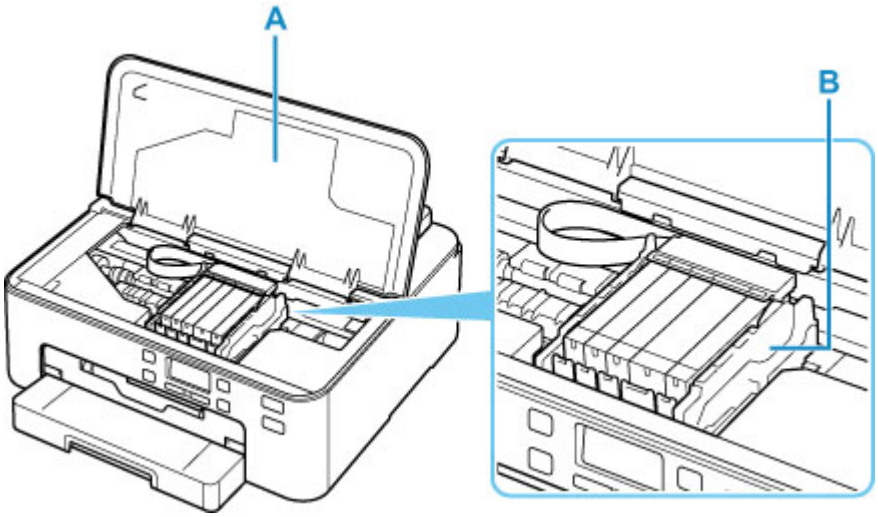

A: Top Cover

Open to replace an ink tank or to remove jammed paper inside the printer.

B: Print Head Holder

The print head is pre-installed.

Note

- For details on replacing an ink tank, see Replacing Ink Tanks.

Operation Panel

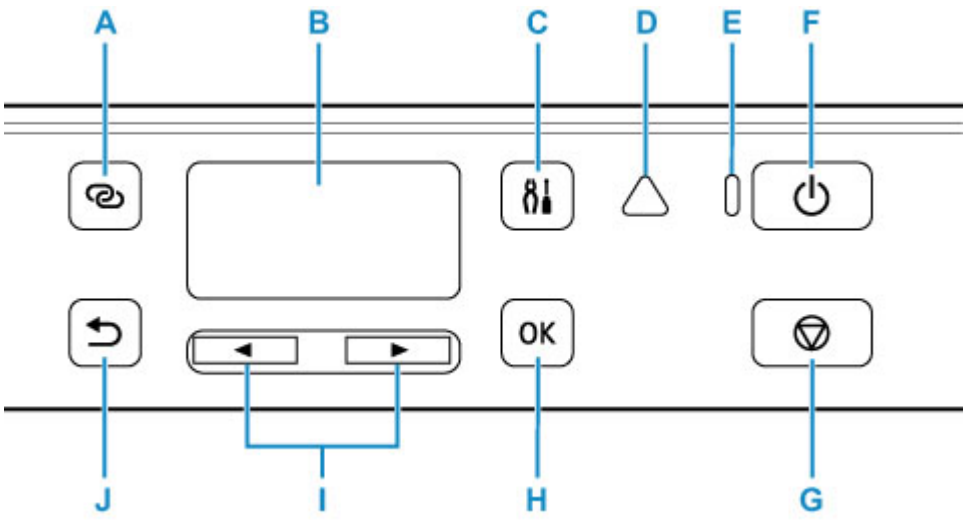

A: Wireless connect button

To set wireless router information in the printer directly from a smartphone or other such device (without having to do any procedures at the router), hold down this button.

B: LCD (Liquid Crystal Display)

Displays messages, menu items, and the operational status.

C: Setup button

Displays the **Setup menu** screen. With this menu, you can perform printer maintenance and change printer settings. Also used for selecting the input mode.

D: Alarm lamp

Lights or flashes when an error occurs.

E: ON lamp

Lights after flashing when the power is turned on.

F: ON button

Turns the power on or off.

Turning the Printer On and Off

G: Stop button

Cancels operation when printing is in progress or when selecting a menu item.

H: OK button

Finalizes your selection of items. Also used to resolve errors.

I: ◄ and ► buttons

Used to select a setting item. These buttons are also used for entering characters.

Selecting a Menu or Setting Item

J: Back button

Returns the LCD to the previous screen.

Power Supply

- Checking that Power Is On
- Turning the Printer On and Off
- Checking the Power Plug/Power Cord
- Unplugging the Printer

Checking that Power Is On

The **ON** lamp is lit when the printer is turned on.

Even if the LCD is off, if the **ON** lamp is lit, the printer is on.

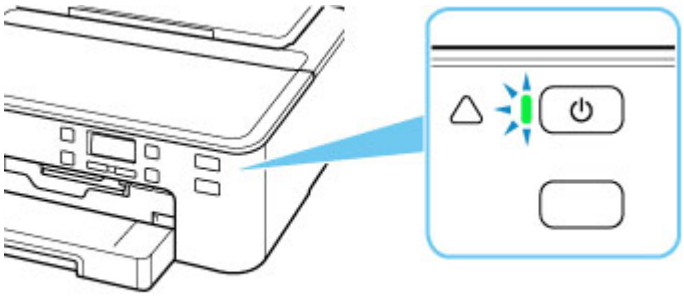

Note

- It may take a while for the printer to start printing immediately after you turn on the printer.
- The LCD will turn off if the printer is not operated for about 10 minutes. To restore the display, press any button or perform the print operation.

Turning the Printer On and Off

Turning on the printer

1. Press the **ON** button to turn on the printer.

   The **ON** lamp flashes and then remains lit.

   Confirming that the Power Is On

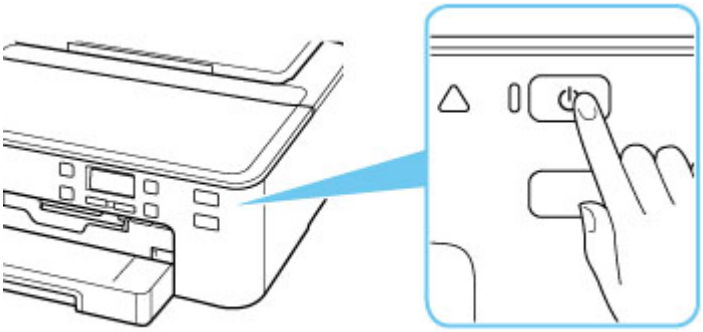

Note

- It may take a while for the printer to start printing immediately after you turn on the printer.
- If an error message is displayed on the LCD, see An Error Occurs.
- You can set the printer to automatically turn on when a print operation is performed from a computer connected by USB cable or via network. This feature is set to off by default.

  From the printer

  ECO settings

  From the computer

  - For Windows:

    Managing the Printer Power

  - For macOS:

    Managing the Printer Power

Turning off the printer

1. Press the **ON** button to turn off the printer.

   When the **ON** lamp stops flashing, the printer is turned off.

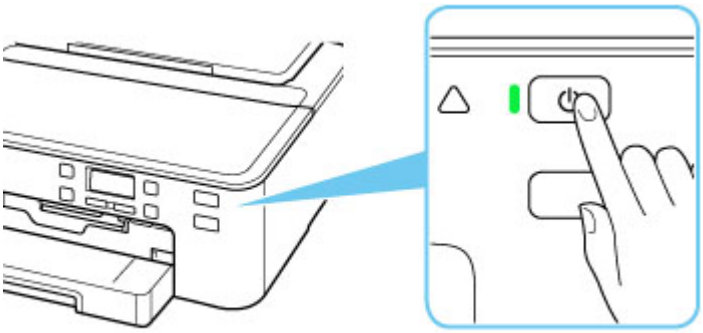

Important

- When you unplug the power cord after turning off the printer, be sure to confirm that the **ON** lamp is off.

Note

- You can set the printer to automatically turn off when no operations are performed or no print jobs are sent to the printer for a certain interval. This feature is set to on by default.

  From the printer

  ■ ECO settings

  From the computer

  - For Windows:

    ■ Managing the Printer Power

  - For macOS:

    ■ Managing the Printer Power

Checking the Power Plug/Power Cord

Unplug the power cord once a month to confirm that the power plug/power cord does not have anything unusual described below.

- The power plug/power cord is hot.
- The power plug/power cord is rusty.
- The power plug/power cord is bent.
- The power plug/power cord is worn.
- The power plug/power cord is split.

⚠ Caution

- If you find anything unusual with the power plug/power cord described above, unplug the power cord and call for service. Using the printer with one of the unusual conditions above may cause a fire or an electric shock.

Unplugging the Printer

To unplug the power cord, follow the procedure below.

Important

- When you unplug the power cord, press the **ON** button, then confirm that the **ON** lamp is off.
  Unplugging the power cord while the **ON** lamp is lit or flashing may cause drying or clogging of the print head and print quality may be reduced.

1. Press the **ON** button to turn the printer off.

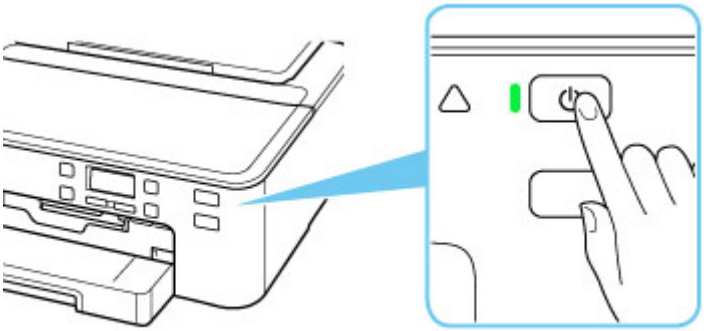

2. Confirm that the **ON** lamp is off.

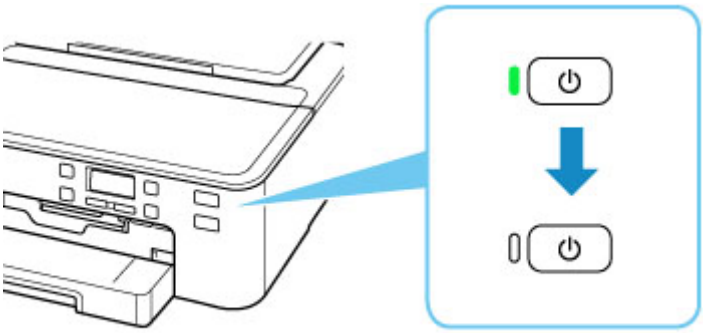

3. Unplug the power cord.

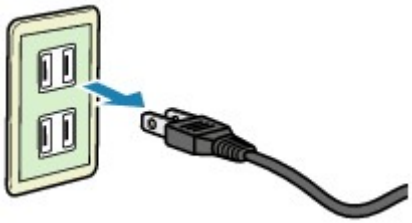

The specification of the power cord differs depending on the country or region of use.

LCD and Operation Panel

Pressing the **Setup** button (A) on the operation panel displays the **Setup menu** screen, which enables you to perform printer settings and maintenance.

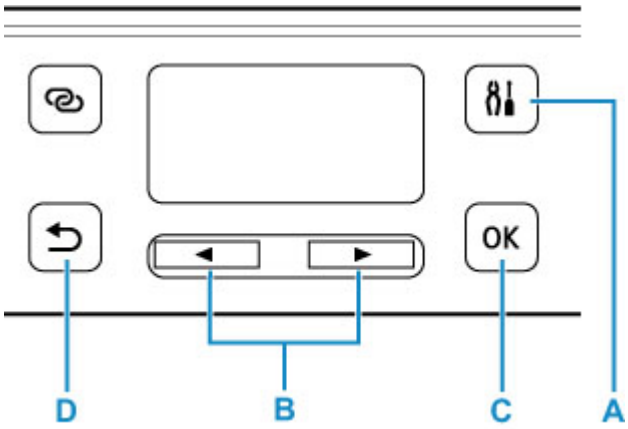

Selecting a Menu or Setting Item

In a menu screen or settings screen, use the ◄ ► button (B) to select an item or option, and then press the **OK** button (C) to proceed with the procedure.

To return to the previous screen, press the **Back** button (D).

Example: Changing the setting for Prevent Abrasion.

1. Press **Setup** button (A).

   Setup menu
   Wi-Fi setup ►

2. Use ◄ ► button (B) to select **Device settings** and press **OK** button (C).

   Device settings
   Print settings ►

3. Press **OK** button (C).

   Print settings
   Prevent abrasion ►

4. Press **OK** button (C).

   Prevent abrasion
   ◄ *OFF

5. Use ◄ ► button (B) to change setting and press **OK** button (C).

Network Status Indication

Wi-Fi setting and the network status indicate by the icon in the standby screen.

If the Wi-Fi icon appears on the LCD, it indicates that Wi-Fi is enabled and the printer is connected to the wireless router.

Depending on the signal state, the icon will change.

Signal strength: 81 % or more

You can use the printer over Wi-Fi without any problems.

Signal strength: 51 % or more

The problem such as the printer cannot print may occur according to the network status. We recommend placing the printer near the wireless router.

Signal strength: 50 % or less

The problem such as the printer cannot print may occur. Place the printer near the wireless router.

Wi-Fi is enabled but the printer is not connected to the wireless router.

If the LAN icon appears on the LCD, it indicates that the wired LAN is enabled.

Note

- When Wi-Fi, wired LAN, or both are disabled, the Wi-Fi icon, LAN icon, or both are not displayed.

Entering Numbers, Letters, and Symbols

The buttons on the operation panel allow you to enter (or change) characters, numbers, or symbols when setting up the network or making other settings.

Switching the Input Mode

The current input mode appears at the upper right corner of the LCD.

Pressing the **Setup** button on the operation panel toggles through the input modes in the order lowercase > uppercase > numeric > symbols, showing the first available character.

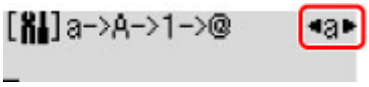

The following shows available characters in each mode.

Mode	Available characters
Lowercase	abcdefghijklmnopqrstuvwxyz SP
Uppercase	ABCDEFGHIJKLMNOPQRSTUVWXYZ SP
Numeric	1234567890 SP
Symbols	. @ - _ SP ★# ! " , ; : ^ ` = / | ' ? $ % & + ( ) [ ] { } < > \ ~

SP: Indicates a space.

Note

- Only the input modes or characters available for input appear in their respective screens.

Entering Numbers, Letters, and Symbols

Use the ◄ ► button to select a character and press the **OK** button to input it.

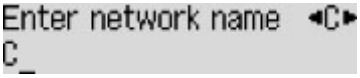

When input of all characters is complete, hold down the **OK** button. When a confirmation message appears, select **Yes** and press the **OK** button.

- To insert a space

  Switch to the lowercase, uppercase, or numeric mode, and then press the ◄ button once. Alternatively switch to the symbol mode and then press the ► button four times.

- To delete the last entered character

  Press the **Back** button. You can only delete the last entered character.

Note

- To terminate character entry, press the **Stop** button. When a confirmation message appears, select **Yes** and press the **OK** button.

Changing Settings

- Changing Printer Settings from Your Computer (Windows)
- Changing Printer Settings from Your Computer (macOS)
- Changing Settings from Operation Panel

Changing Printer Settings from Your Computer (Windows)

- Changing the Print Options
- Registering a Frequently Used Printing Profile
- Setting the Ink Tank to be Used
- Managing the Printer Power
- Changing the Printer Operation Mode

Changing the Print Options

You can change the detailed printer driver settings for print data that is sent from an application software.

Check this check box if part of the image data is cut off, the paper source during printing differs from the driver settings, or printing fails.

1. Open the printer driver setup window

2. Click **Print Options...** on the **Page Setup** tab

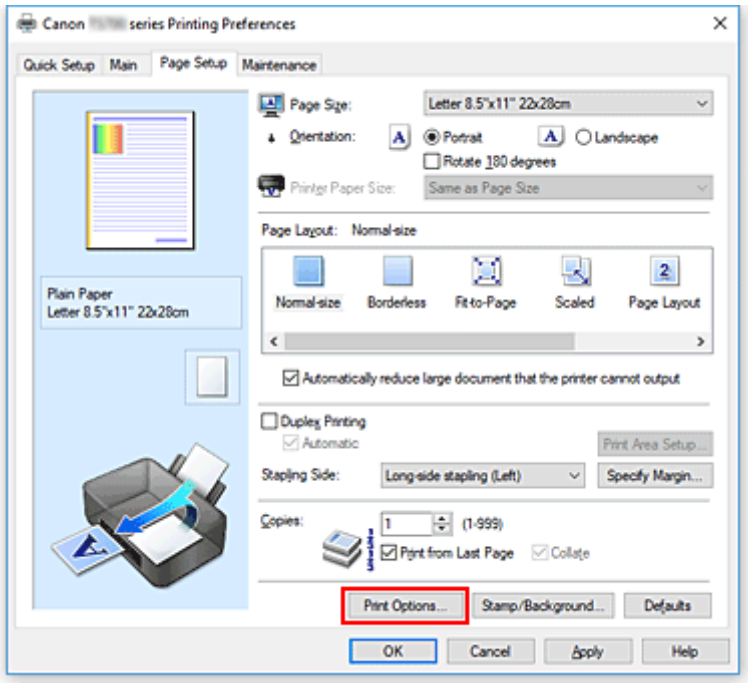

The **Print Options** dialog box opens.

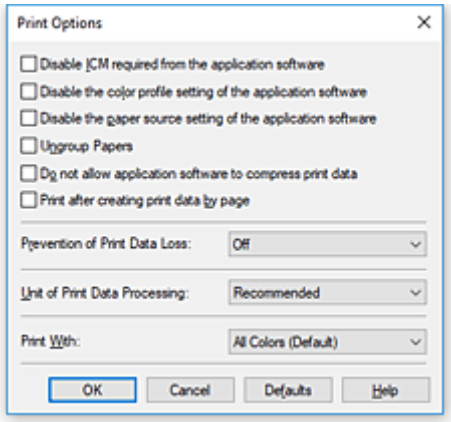

3. Change the individual settings

If necessary, change the setting of each item, and then click **OK**.

The **Page Setup** tab is displayed again.

Registering a Frequently Used Printing Profile

You can register the frequently used printing profile to **Commonly Used Settings** on the **Quick Setup** tab. Unnecessary printing profiles can be deleted at any time.

Registering a Printing Profile

1. Open the printer driver setup window

2. Set the necessary items

   From **Commonly Used Settings** on the **Quick Setup** tab, select the printing profile to be used and if necessary, change the settings after **Additional Features**.
   You can also register necessary items on the **Main** and **Page Setup** tabs.

3. Click **Save...**

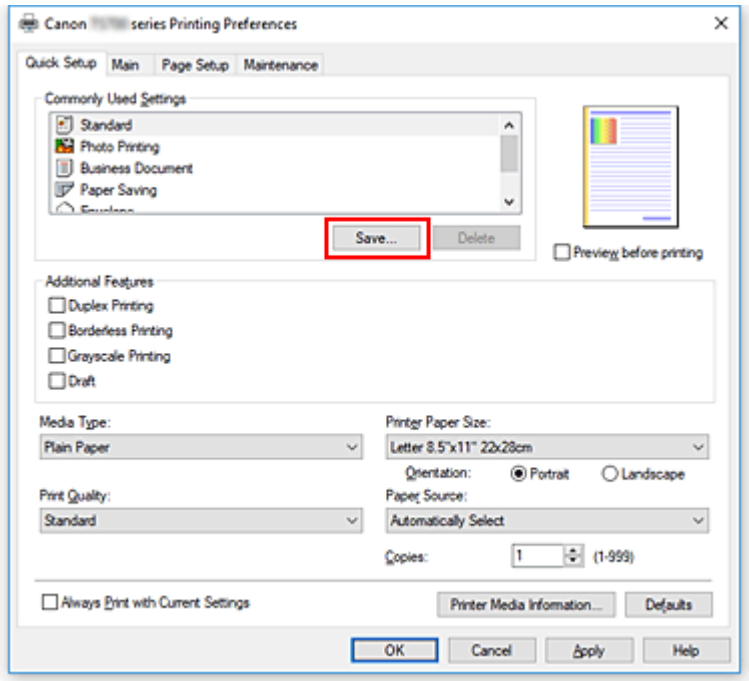

   The **Save Commonly Used Settings** dialog box opens.

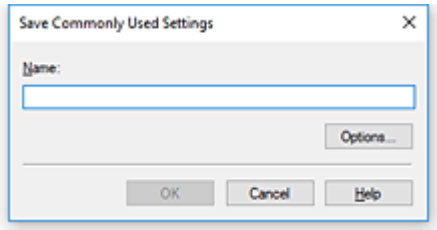

4. Save the settings

   Enter a name in the **Name** field. If necessary, click **Options...**, set the items, and then click **OK**.
   In the **Save Commonly Used Settings** dialog box, click **OK** to save the print settings and return to the

Quick Setup tab.
The name and icon are displayed in **Commonly Used Settings**.

Important

- To save the page size, orientation, and number of copies that was set in each sheet, click **Options...**, and check each item.

Note

- When you re-install the printer driver or upgrade the printer driver version, the print settings that are already registered will be deleted from **Commonly Used Settings**.
  Registered print settings cannot be saved and preserved. If a profile is deleted, register the print settings again.

Deleting Unnecessary Printing Profile

1. Select the printing profile to be deleted

   Select the printing profile you want to delete from the **Commonly Used Settings** list on the **Quick Setup** tab.

2. Delete the printing profile

   Click **Delete**. When the confirmation message appears, click **OK**.
   The selected printing profile is deleted from the **Commonly Used Settings** list.

Note

- Printing profiles that are registered in the initial settings cannot be deleted.

Setting the Ink Tank to be Used

This feature enables you to specify the most appropriate ink tank among installed ink tanks according to an intended use.

1. Open the printer driver setup window

2. Click **Print Options...** on the **Page Setup** tab

   The **Print Options** dialog box appears.

3. Select the ink tank to be used from **Print With**

   Select the ink tank to be used for printing and click **OK**.

4. Click **OK** on the **Page Setup** tab

   When you perform printing, the specified ink tank will be used.

Important

- When the following settings are specified, **Only PGBK (Black)** does not function because the printer uses an ink tank other than PGBK (Black) to print documents.
  - Other than **Plain Paper**, **Envelope**, **Ink Jet Hagaki (A)**, **Hagaki K (A)**, **Hagaki (A)**, or **Hagaki** is selected for **Media Type** on the **Main** tab
  - **Borderless** is selected from the **Page Layout** list on the **Page Setup** tab
- Do not detach the ink tank that is not in use. Printing cannot be performed while either ink tank is detached.

Managing the Printer Power

This function allows you to manage the printer power from the Canon IJ Printer Assistant Tool.

Power Off

The **Power Off** function turns off the printer. When you use this function, you will not be able to turn the printer on from the Canon IJ Printer Assistant Tool.

1. Open Canon IJ Printer Assistant Tool

2. Execute power off

   Click **Power Off**. When the confirmation message appears, click **OK**.

   The printer power switches off.

Auto Power

Auto Power allows you to set **Auto Power On** and **Auto Power Off**.
The **Auto Power On** function automatically turns on the printer when data is received.
The **Auto Power Off** function automatically turns off the printer when there are no operations from the printer driver or the printer for a specified period of time.

1. Open the Canon IJ Printer Assistant Tool

2. Check that the printer is on and then click **Auto Power**

   The **Auto Power Settings** dialog box opens.

   Note

   - If the printer is off or if communication between the printer and the computer is disabled, an error message may appear because the computer cannot collect the printer status.
     If this happens, click **OK** to display the most recent settings specified on your computer.

3. If necessary, complete the following settings:

   Auto Power On
   Specifying **Enable** from the list will turn the printer on upon receipt of print data.

   Auto Power Off
   Specify the time from the list. When this time lapses without any operations from the printer driver or the printer, the printer is turned off automatically.

4. Apply the settings

Click **OK**. When the confirmation message appears, click **OK**.

The setting is enabled after this. When you want to disable this function, select **Disable** from the list according to the same procedure.

Note

- When the printer is turned off, the Canon IJ Status Monitor message varies depending on the **Auto Power On** setting.
  When the setting is **Enable**, "Printer is standing by" is displayed. When the setting is **Disable**, "Printer is offline" is displayed.

Changing the Printer Operation Mode

If necessary, switch between various modes of printer operation.

Custom Settings

1. Open the Canon IJ Printer Assistant Tool

2. Check that the printer is on and then click **Custom Settings**

   The **Custom Settings** dialog box opens.

   Note

   - If the printer is off or if communication between the printer and the computer is disabled, an error message may appear because the computer cannot collect the printer status.
     If this happens, click **OK** to display the most recent settings specified on your computer.

3. If necessary, complete the following settings:

   Detect a printable disc in the tray

   Detects whether a printable disc is loaded on the multi-purpose tray during disc label printing and displays a message if a disc is not loaded.
   Check this check box to print with detecting whether a printable disc is loaded.
   Uncheck this check box to print without detecting whether a printable disc is loaded.

   Important

   - If you leave this check box unchecked, the printer may print to the multi-purpose tray even if a printable disc is not loaded on the multi-purpose tray. Therefore, you should check this check box under normal circumstances.
   - If you load a printable disc that has already been printed onto the multi-purpose tray, the printer may detect that no printable disc is loaded on the multi-purpose tray. In this case, uncheck this check box.

   Prevents paper abrasion

   The printer can increase the gap between the print head and the paper during high-density printing to prevents paper abrasion.
   Check this check box to prevents paper abrasion.

   Align heads manually

   Usually, the **Print Head Alignment** function in the Canon IJ Printer Assistant Tool is set to automatic head alignment, but you can change it to manual head alignment.
   If the printing results of automatic Print Head Alignment are not satisfactory, perform manual head alignment.
   Check this check box to perform the manual head alignment. Uncheck this check box to perform the automatic head alignment.

Rotate 90 degrees left when orientation is [Landscape]

On the **Page Setup** tab, you can change the rotation direction of the **Landscape** in the **Orientation**.

To rotate the print data 90 degrees to the left during printing, select this item. To rotate the print data 90 degrees to the right during printing, clear this item.

Important

- Do not change this setting while the print job is displayed in the print wait list. Otherwise, characters may be omitted or the layout may become corrupt.

Do not detect mismatched paper settings when printing from a computer

When you print documents from your computer, the paper settings in the printer driver and the paper information registered on the printer do not match, this setting disables the message display and allows you to continue printing.

To disable detection of paper setting mismatches, select this check box.

Ink Drying Wait Time

You can set the length of the printer rest time until printing of the next page begins. Moving the slider to the right increases the pause time, and moving the slider to the left decreases the time. If the paper gets stained because the next page is ejected before the ink on the printed page dries, increase the ink drying wait time.

Reducing the ink drying wait time speeds up printing.

4. Apply the settings

Click **OK** and when the confirmation message appears, click **OK**.

The printer operates with the modified settings hereafter.

Changing Settings from Operation Panel

- Changing Settings from Operation Panel
- Setting Items on Operation Panel
- Print settings
- LAN settings
- Bluetooth settings
- PictBridge settings
- Other dev. settings
- Language selection
- Firmware update
- Reset setting
- Feed settings
- Web service setup
- ECO settings
- Quiet setting
- System information

Changing Settings from Operation Panel

This section describes the procedure to change the settings in the **Device settings** screen, taking the steps to specify **Prevent abrasion** as an example.

Note

- The * (asterisk) on the LCD indicates the current setting.

1. Check that printer is turned on.

2. Press the **Setup** button.

   The **Setup menu** screen is displayed.

3. Select **Device settings** and then press the **OK** button.

   The **Device settings** screen is displayed.

4. Select a setting item to adjust and then press the **OK** button.

   Device settings
   Print settings ▸

   The setting screen for the selected item is displayed.

5. Select a setting item and then press the **OK** button.

   Print settings
   Prevent abrasion ▸

6. Select a setting to specify and then press the **OK** button.

   Prevent abrasion
   ◂ *OFF

For more on setting items on the operation panel:

- Setting Items on Operation Panel

Setting Items on Operation Panel

Items for Printer

- Other device settings
- Language selection
- Web service setup
- ECO settings
- Quiet setting

Items for Paper/Printing

- Print settings
- Bluetooth settings
- PictBridge settings
- Feed settings

Items for Maintenance/Management

- LAN settings
- Firmware update
- Reset setting
- System information

Print settings

Select this menu from **Device settings** in **Setup menu**.

- **Prevent abrasion**

  Use this setting only if the print surface becomes smudged.

  Important

  - Be sure to set this back to **OFF** after printing since it may result in lower printing speed or lower print quality.

- **Amount of extension**

  Select the amount of image that extends off the paper when performing Borderless Printing.

  When performing Borderless Printing, slight cropping may occur at the edges since the printed image is enlarged to fill the whole page. You can change the width to be cropped from the borders of the original image as needed.

  Cropped area will be larger if **Amount: Large** is selected.

  Note

  - For Borderless Printing, at Paper Size Settings at the computer, select a paper size for Borderless Printing, then print.
  - If printouts contain margins even though you are printing in Borderless, specifying **Amount: Large** for this setting may help solve the problem.
  - Depending on your devices or how to print, the setting may be disabled.

- **Disc print position**

  You can adjust the disc printing area if the image is not aligned with the printable disc.

  Select **Left/right** or **Top/bottom** for the print position. You can adjust each in the range of -0.04 in. (-0.9 mm) to +0.04 in. (+0.9 mm) in increments of 0.01 in. (0.1 mm).

- **Auto photo fix set.**

  When **ON** is selected, you can select whether to print photos using the Exif information recorded in the image files when **Default*** or **On** is selected in printing with a PictBridge (Wi-Fi) compliant device.

  * When **Default** is selected for the print setting on the PictBridge (Wi-Fi) compliant device, select **Auto photo fix** for **Photo fix** in **PictBridge settings**.

- **Paper print position**

  Adjusts the print position when the left/right margins are not aligned.

  Select **Rear tray** or **Cassette** for the paper source. You can adjust their printing positions by 0.12 in. (3 mm) to the right or left with respect to its center of the paper along the horizontal axis.

  Important

  - For Letter-sized or Legal-sized paper, you can adjust the left/right margins between -0.06 in. (-1.5 mm) and +0.06 in. (+1.5 mm) even if you specify the value over 0.06 in. (1.5 mm).

LAN settings

Select this menu from **Device settings** in **Setup menu**.

- Wi-Fi
- Wireless Direct
- Wired LAN
- Print LAN details

Wi-Fi

- **Wi-Fi enab./disable**

  Enables or disables Wi-Fi.

- **Wi-Fi setup**

  Selects the setup method for Wi-Fi connection.

  Note

  - You can also enter this setting menu by selecting **Wi-Fi setup** from the **Setup menu** screen.

  - **Easy WL connect**

    Select if you specify the settings of the access point information to the printer directly from a device (such as a smartphone) without operating the wireless router. Follow the on-screen instructions of the connecting device for the setup procedure.

  - **Manual connect**

    Select when you perform settings for Wi-Fi manually using the operation panel of the printer.

  - **WPS (Push button)**

    Select when you perform settings for Wi-Fi using a wireless router supporting a Wi-Fi Protected Setup (WPS) push button method. Follow the on-screen instructions during setup.

  - **Other setup**

    - **Manual setup**

      Select when you perform settings for Wi-Fi manually. You can specify multiple WEP keys.

    - **WPS (PIN code)**

      Select when you perform settings for Wi-Fi using a wireless router supporting a Wi-Fi Protected Setup (WPS) PIN code method. Follow the on-screen instructions during setup.

- **Manual setup**

  For details on each setting item:

  - Manual setup

Wireless Direct

- **Switch WL Direct**

  Enables/disables Wireless Direct.

- **Change name (SSID)**

  Changes the identifier (SSID/the printer's name displayed on a Wi-Fi Direct compatible device) for Wireless Direct.

- **Change password**

  Changes the password for Wireless Direct.

- **Confirm request**

  Set whether the printer displays the confirmation screen when a Wi-Fi Direct compatible device is connecting the printer.

- **Manual setup**

  For details on each setting item:

  Manual setup

Wired LAN

- **Enab./dis. wired LAN**

  Enables or disables wired LAN.

- **Manual setup**

  For details on each setting item:

  Manual setup

Print LAN details

You can print out the network settings of the printer such as its IP address and SSID.

For more information on the printer's network setting is printed out:

Printing Network Settings

Important

- The network settings printout contains important information about your network. Handle it with care.

Manual setup

- **Set printer name**

  Specifies the printer name. You can use up to 15 characters for the name.

Note

- You cannot use the same printer name as that already used for other LAN connected devices.
- You cannot use a hyphen for the initial or last character of the printer name.

- **TCP/IP settings**

  Performs IPv4 or IPv6 setting.

- **WSD setting**

  Setting items when you use WSD (one of the network protocols supported in Windows).

  - **Enable/disable WSD**

    Selects whether WSD is enabled or disabled.

    Note

    - When this setting is enabled, the printer icon is displayed on the Network Explorer in Windows.

  - **Optimize WSD-In**

    Selecting **Enable** allows you to receive the WSD printing data faster.

  - **Timeout setting**

    Specifies the timeout length.

- **Bonjour settings**

  Setting items when you use Bonjour.

  - **Enab./disab. Bonjour**

    Selecting **Enable** allows you to use Bonjour to perform the network settings.

  - **Enter service name**

    Specifies the Bonjour service name. You can use up to 48 characters for the name.

    Note

    - You cannot use the same service name as that already used for other LAN connected devices.

- **LPR setting**

  Enables/disables the LPR setting.

- **RAW protocol**

  Enables/disables RAW printing.

- **LLMNR**

  Enables/disables LLMNR (Link-Local Multicast Name Resolution). Selecting **Enable** allows the printer to detect printer's IP address from the printer name without a DNS server.

- **IPP settings**

  Selecting **Enable** allows you to print via the network with the IPP protocol.

- **PictBridge commun.**

Setting items for printing from a PictBridge (Wi-Fi) compliant device.

- **Enable/disable**

  Selecting **Enable** allows you to print from a PictBridge (Wi-Fi) compliant device.

- **Timeout setting**

  Specifies the timeout length.

- **DRX setting**

  Selecting **Enable** allows you to activate discontinuous reception when the printer is connected to a device compatible with wired LAN.

- **IPsec settings**

  Selecting **Enable** allows you to specify the IPsec settings.

Other dev. settings

Select this menu from **Device settings** in **Setup menu**.

- **Key repeat**

  Selecting **ON** lets you quickly display candidate numbers or characters by holding down the ◄► button during character entry.

Language selection

Changes the language for LCD messages and menus.

Japanese / English / German / French / Italian / Spanish / Dutch / Portuguese / Norwegian / Swedish / Danish / Finnish / Russian / Ukrainian / Polish / Czech / Slovak / Hungarian / Slovene / Croatian / Romanian / Bulgarian / Turkish / Greek / Estonian / Latvian / Lithuanian / Simplified Chinese / Traditional Chinese / Korean / Indonesian / Vietnamese

Firmware update

Select this menu from **Device settings** in **Setup menu**.

You can update the firmware of the printer, check the firmware version, or perform settings of a notification screen.

Important

- When you use this function, make sure the printer is connected to the internet.

Note

- Only **Current version** is available when **Disable** is selected for **Wi-Fi enab./disable** of **Wi-Fi** and also for **Enab./dis. wired LAN** of **Wired LAN** in **LAN settings**.

- **Install update**

  Performs the firmware update of the printer. Follow the on-screen instructions to perform update.

  #### Note

  - If the firmware update is not complete, check the following and take an appropriate action.
    - Check the network settings.
    - If **Cannot connect to the server; try again** is displayed on the LCD, press the **OK** button and try again after a while.

- **Current version**

  You can check the current firmware version.

- **Update notification**

  When **ON** is selected and the firmware update is available, the screen to inform you of the firmware update is displayed on the LCD.

- **DNS server setup**

  Performs settings for a DNS server. Select **Auto setup** or **Manual setup**. If you select **Manual setup**, follow the display on the LCD to perform settings.

- **Proxy server setup**

  Performs settings for a proxy server. Select **Use** or **Do not use**. If you select **Use**, follow the display on the LCD to perform settings.

Reset setting

Select this menu from **Device settings** in **Setup menu**.

Returns all settings you made to the printer back to the default. However, some data may not be changed, depending on the current usage state of your printer.

Important

- Depending on the setting item, it is necessary to perform connection or setup again after you have returned the setting back to the default.

- **Web service setup**

  Returns the Web service settings back to the default.

- **LAN settings**

  Returns the LAN settings back to the default.

- **Setting data**

  Returns the settings such as the paper size, media type, or other setting items other than the network settings back to the default.

- **All data**

  Sets all settings you made to the printer back to the default. The administrator password specified by Remote UI or IJ Network Device Setup Utility reverts to the default setting.

  After resetting, perform setup again as necessary.

Note

- You cannot set the following setting items back to the default:
  - The language displayed on the LCD
  - The current position of the print head
  - CSR (Certificate Signing Request) for encryption method (SSL/TLS) setting

Feed settings

Select this menu from **Setup menu**.

By registering the paper size and the media type loaded on the rear tray or in the cassette, you can prevent the printer from misprinting by displaying the message before printing starts when the paper size or the media type of the loaded paper differs from the print settings.

For details:

Paper Settings

- **Save paper info**

  Registers the paper size and the media type you load on the rear tray and in the cassette.

  Note

  - Plain paper can only be loaded in the cassette.
  - For more on the proper combination of paper settings you can specify by the printer driver (Windows) or on the LCD:

    Paper Settings on the Printer Driver and the Printer (Media Type)
    Paper Settings on the Printer Driver and the Printer (Paper Size)

- **Det. paper mismatch**

  If you select **ON**, the printer detects whether the paper size and the media type are identical with those registered in **Save paper info**. If printing starts with the settings that do not match, an error message is displayed on the LCD.

Web service setup

Select this menu from **Setup menu**.

- **Connection setup**

  The following setting items are available.

  - **GoogleCloudPrint**

    Registers/Deletes the printer to/from Google Cloud Print.

- **DNS server setup**

  Performs settings for a DNS server. Select **Auto setup** or **Manual setup**. If you select **Manual setup**, follow the display on the LCD to perform settings.

- **Proxy server setup**

  Performs settings for a proxy server. Select **Use** or **Do not use**. If you select **Use**, follow the display on the LCD to perform settings.

ECO settings

This setting allows you to turn on/off the printer automatically to save electricity.

- Turning off Printer Automatically
- Turning on Printer Automatically

Turning off Printer Automatically

You can enable the printer to turn off automatically when no operation is made or no printing data is sent to the printer for a specified period of time.

1. Check that printer is turned on.
2. Press the **Setup** button.

   The **Setup menu** screen is displayed.
3. Select **ECO settings** and then press the **OK** button.
4. Select **EnergySaveSettings** and then press the **OK** button.
5. Select **Auto power off** and then press the **OK** button.
6. Select a time to turn off the printer and then press the **OK** button.

Turning on Printer Automatically

You can enable the printer to turn on automatically when printing data is sent to the printer.

1. Check that printer is turned on.
2. Press the **Setup** button.

   The **Setup menu** screen is displayed.
3. Select **ECO settings** and then press the **OK** button.
4. Select **EnergySaveSettings** and then press the **OK** button.
5. Select **Auto power on** and then press the **OK** button.
6. Select **ON** and then press the **OK** button.

Quiet setting

Enables this function on the printer if you want to reduce the operating noise, such as when printing at night.

Follow the procedure below to perform setting.

1. Check that printer is turned on.

2. Press the **Setup** button.

   The **Setup menu** screen is displayed.

3. Select **Quiet mode** and then press the **OK** button.

4. Select **ON** or **OFF** and press **OK** button.

   When **ON** is selected, you can reduce the operating noise while printing is in progress.

   Important

   - When **ON** is selected, operating speed may be reduced compared to when **OFF** is selected.
   - This function may not be so effective depending on the printer's setting. Furthermore, certain noise, such as when the printer is preparing for printing, is not reduced.

   Note

   - You can set the quiet mode from the operation panel of the printer or the printer driver. No matter how you set the quiet mode, the mode is applied when you perform operations from the operation panel of the printer or printing from the computer.

System information

Select this menu from **Setup menu**.

- **Current version**

  Displays the current firmware version.

- **Printer name**

  Displays the printer name currently specified.

- **Serial number**

  Displays the printer serial number.

Specifications

General Specifications

Printing resolution (dpi)	4800* (horizontal) x 1200 (vertical) * Ink droplets can be placed with a pitch of 1/4800 inch at minimum.
Interface	**USB Port:** Hi-Speed USB * **Network Port:** Wired LAN: 100BASE-TX / 10BASE-T Wi-Fi: IEEE802.11n / IEEE802.11g / IEEE802.11b * A computer that complies with Hi-Speed USB standard is required. Since the Hi-Speed USB interface is fully upwardly compatible with USB 1.1, it can be used at USB 1.1. USB and LAN can be used at the same time. Wi-Fi and wired LAN cannot be used at the same time.
Print width	8 in. (203.2 mm) (for Borderless Printing: 8.5 in. (216 mm))
Printable area	**Borderless printing:** Top/Bottom/Left/Right margin: 0.0 in. (0.0 mm) **Standard printing:** • Top margin: ◦ Square 3.5" x 3.5" 9 x 9 cm, Square 4" x 4" 10 x 10 cm: 0.20 in. (5.0 mm) ◦ Square 5" x 5" 13 x 13 cm: 0.24 in. (6.0 mm) ◦ Other sizes: 0.12 in. (3.0 mm) • Bottom margin: ◦ Square 5" x 5" 13 x 13 cm: 0.24 in. (6.0 mm) ◦ Other sizes: 0.20 in. (5.0 mm) • Left margin: ◦ Letter/Legal: 0.26 in. (6.4 mm) ◦ Square 3.5" x 3.5" 9 x 9 cm, Square 4" x 4" 10 x 10 cm: 0.20 in. (5.0 mm) ◦ Square 5" x 5" 13 x 13 cm: 0.24 in. (6.0 mm) ◦ Other sizes: 0.14 in. (3.4 mm) • Right margin: ◦ Letter/Legal: 0.25 in. (6.3 mm) ◦ Square 3.5" x 3.5" 9 x 9 cm, Square 4" x 4" 10 x 10 cm: 0.20 in. (5.0 mm) ◦ Square 5" x 5" 13 x 13 cm: 0.24 in. (6.0 mm)

	◦ Other sizes: 0.14 in. (3.4 mm) * For printable area of envelope, see below. ■ Envelopes **Auto duplex printing:** • Top margin: 0.20 in. (5.0 mm) • Bottom margin: 0.20 in. (5.0 mm) • Left margin: ◦ Letter: 0.26 in. (6.4 mm) ◦ Other sizes: 0.14 in. (3.4 mm) • Right margin: ◦ Letter: 0.25 in. (6.3 mm) ◦ Other sizes: 0.14 in. (3.4 mm)
Operating environment	**Temperature:** 41 to 95 °F (5 to 35 °C) **Humidity:** 10 to 90 % RH (no condensation) * The performance of the printer may be reduced under certain temperature and humidity conditions. Recommended conditions: **Temperature:** 59 to 86 °F (15 to 30 °C) **Humidity:** 10 to 80 % RH (no condensation) * For the temperature and humidity conditions of papers such as photo paper, refer to the paper's packaging or the supplied instructions.
Storage environment	**Temperature:** 32 to 104 °F (0 to 40 °C) **Humidity:** 5 to 95 % RH (no condensation)
Power supply	AC 100-240 V, 50/60 Hz (The supplied power cord is only for the country or region you purchased.)
Power consumption	**Printing:** 23 W or less *1 **Standby (minimum):** 0.9 W or less *1*2 **OFF:** 0.3 W or less *1 USB connection to a PC, and Bluetooth settings enabled *2 The wait time for standby cannot be changed.
External dimensions (W x D x H)	Approx. 14.7 x 14.4 x 6.3 in. (Approx. 372 x 365 x 158 mm) * With the Cassette and trays retracted.
Weight	Approx. 11.8 lb (Approx. 5.4 kg) * With the Print Head and ink tanks installed.
Print Head/Ink	Total 4096 nozzles (PgBK 1024 nozzles, Y/DyeBK each 512 nozzles, C/M each 1024 nozzles)

Network Specifications

Communication protocol	TCP/IP
Wired LAN	**Supported Standards:** IEEE802.3u (100BASE-TX) / IEEE802.3 (10BASE-T) **Transfer speed:** 10 M/100 Mbps (auto switching)
Wi-Fi	**Supported Standards:** IEEE802.11n / IEEE802.11g / IEEE802.11b **Frequency bandwidth:** 2.4 GHz **Channel:** 1-11 or 1-13 * Frequency bandwidth and available channels differ depending on country or region. **Communication distance:** Indoors 164 feet/50 m * Effective range varies depending on the installation environment and location. **Security:** WEP (64/128 bits) WPA-PSK (TKIP/AES) WPA2-PSK (TKIP/AES) **Setup:** WPS (Push button configuration/PIN code method) WCN (WCN-NET) Easy wireless connect **Other Features:** Administration password

Minimum System Requirements

Conform to the operating system's requirements when higher than those given here.

Windows

Operating System	Windows 10, Windows 8.1, Windows 7 SP1 Note: Operation can only be guaranteed on a PC with pre-installed Windows 7 or later. Printer driver and IJ Network Device Setup Utility support the following OS: Windows Server 2008 R2 SP1, Windows Server 2012 R2 and Windows Server 2016.
Hard Disk Space	2.0 GB or more Note: For bundled software installation. The necessary amount of hard disk space may be changed without notice.
Display	XGA 1024 x 768

macOS

Operating System	OS X 10.10.5 - OS X 10.11, macOS 10.12 - macOS 10.13
Hard Disk Space	1.0 GB or more Note: For bundled software installation. The necessary amount of hard disk space may be changed without notice.
Display	XGA 1024 x 768

Other Supported OS

iOS, Android, Windows 10 Mobile Some functions may not be available with the supported OS. Refer to the Canon web site for details.

Mobile Printing Capability

Apple AirPrint
Google Cloud Print
PIXMA Cloud Link
Windows 10 Mobile Print
Mopria Print Service

- Internet connection or CD-ROM drive is required to install the software for Windows.
- Internet connection is required to use Easy-PhotoPrint Editor and all the user's guide.
- Windows: Some functions may not be available with Windows Media Center.
- macOS: For macOS, an internet connection is required during software installation.
- In an in-house network environment, the 5222 port must be open. Contact the network administrator for details.

Information in this manual is subject to change without notice.

Information about Paper

- **Supported Media Types**
  - Paper Load Limit
- **Unsupported Media Types**
- **Handling Paper**
- **Print Area**

Supported Media Types

For best results, choose paper designed for how you are printing. A variety of paper for documents as well as photos or illustrations is available from Canon. Use genuine Canon paper to print important photos, when possible.

Media Types

Genuine Canon paper

Note

- For warnings on use of the non-printable side, see each product's usage information.
- Page sizes and media types differ depending on the country or region where the paper is sold. For details on page sizes and media types, access the Canon website.
- Genuine Canon paper is not available in some countries or regions. Note that in the United States, Canon paper is not sold by model number. Instead, purchase paper by name.

Paper for printing documents:

- Canon Red Label Superior <WOP111>
- Canon Océ Office Colour Paper <SAT213>
- High Resolution Paper <HR-101N>*1

Paper for printing photos:

- Photo Paper Pro Platinum <PT-101>
- Glossy Photo Paper "Everyday Use" <GP-501/GP-508>
- Photo Paper Glossy <GP-701>
- Photo Paper Plus Glossy II <PP-201/PP-208/PP-301>
- Photo Paper Pro Luster <LU-101>
- Photo Paper Plus Semi-gloss <SG-201>
- Matte Photo Paper <MP-101>

Paper for making original goods:

- Photo Stickers (16 stickers per sheet) <PS-108>
- Photo Stickers (Free Cutting) <PS-208>
- Photo Stickers (Variety Pack) <PS-808>
- Restickable Photo Paper <RP-101>
- Removable Photo Stickers <PS-308R>
- Magnetic Photo Paper <MG-101/PS-508>
- Printable Nail Stickers <NL-101>*1 *2

Paper other than genuine Canon paper

- Plain Paper (including recycled paper)
- Envelopes*1
- T-Shirt Transfers*1
- Greeting Card*1
- Card Stock*1

*1 Printing to this paper from a PictBridge (Wi-Fi) compliant device is not supported.
*2 When printing, mount a special adapter on the supplied multi-purpose tray.

Paper Load Limit
Paper Settings on the Printer Driver and the Printer (Media Type) (Windows)

Note

- When printing photos saved on a PictBridge (Wi-Fi) compliant device, you must specify the page size and media type.

  Printing from Digital Camera

Page Sizes

You can use the following page sizes.

Note

- Page sizes and media types the printer supports differ depending on the OS you are using.

Standard sizes:

- Letter
- Legal
- A5
- A4
- B5
- KG/4"x6"(10x15)
- 5"x7"(13x18cm)
- 7"x10"(18x25cm)
- 8"x10"(20x25cm)
- L(89x127mm)
- 2L(127x178mm)
- Square 3.5"
- Square 4"
- Square 5"
- Hagaki

- Hagaki 2
- Envelope Com 10
- Envelope DL
- Nagagata 3
- Nagagata 4
- Yougata 4
- Yougata 6
- Card 2.17"x3.58"

Special sizes

Special page sizes must be within the following limits:

- rear tray
  - Minimum size: 2.17 x 3.51 in. (55.0 x 89.0 mm)

    Maximum size: 8.50 x 26.61 in. (215.9 x 676.0 mm)
- cassette
  - Minimum size: 5.83 x 8.27 in. (148.0 x 210.0 mm)

    Maximum size: 8.50 x 11.69 in. (215.9 x 297.0 mm)

Paper Weight

You can use paper in the following weight range.

- 17 to 28 lb (64 to 105 g /m^2) (plain paper other than genuine Canon paper)

Paper Load Limit

This section shows the paper load limits of the rear tray, the cassette, and the paper output tray.

- Paper Load Limits of Rear Tray and Cassette
- Paper Load Limit of Paper Output Tray

Note

- Page sizes and media types differ depending on the country or region where the paper is sold. For details on page sizes and media types, access the Canon website.

Paper Load Limits of Rear Tray and Cassette

Genuine Canon Paper

Paper for printing documents:

Media Name <Model No.>	Rear Tray	Cassette
Canon Red Label Superior <WOP111>	A4: Approx. 100 sheets	A4: Approx. 250 sheets
Canon Océ Office Colour Paper <SAT213>	A4: Approx. 80 sheets	A4: Approx. 200 sheets
High Resolution Paper <HR-101N>*1	A4, B5, Letter: Approx. 80 sheets	N/A

Paper for printing photos:

Media Name <Model No.>	Rear Tray
Photo Paper Pro Platinum <PT-101>*2 Glossy Photo Paper "Everyday Use" <GP-501/GP-508>*2 Photo Paper Glossy <GP-701>*2 Photo Paper Plus Glossy II <PP-201/PP-208/PP-301>*2 Photo Paper Pro Luster <LU-101>*2 Photo Paper Plus Semi-gloss <SG-201>*2 Matte Photo Paper <MP-101>	A4, Letter, 5"x7"(13x18cm), 8"x10"(20x25cm), 2L(127x178mm): 10 sheets KG/4"x6"(10x15), L(89x127mm), Square 3.5", Square 4", Square 5", Hagaki: 20 sheets

Paper for making original goods:

Media Name <Model No.>	Rear Tray
Photo Stickers (16 stickers per sheet) <PS-108> Photo Stickers (Free Cutting) <PS-208> Photo Stickers (Variety Pack) <PS-808> Restickable Photo Paper <RP-101> Removable Photo Stickers <PS-308R> Magnetic Photo Paper <MG-101/PS-508>	1 sheet

Paper other than Genuine Canon Paper

Common Name	Rear Tray	Cassette
Plain Paper (including recycled paper)*1	Approx. 100 sheets (Legal: 10 sheets)	Approx. 250 sheets
Envelopes	10 envelopes	N/A
T-Shirt Transfers	A4: 1 sheet	N/A
Greeting Card	Letter, 7"x10"(18x25cm): 1 sheet	N/A
Card Stock	A4, Letter: 1 sheet	N/A

*1 Normal feeding at maximum capacity may not be possible with some types of paper, or under very high or low temperature or humidity. In this case, load half the amount of paper or less.
*2 Feeding from a loaded stack of paper may leave marks on the printed side or prevent efficient feeding. In this case, load one sheet at a time.

Paper Load Limit of Paper Output Tray

Genuine Canon Paper

Paper for printing documents:

Media Name <Model No.>	Paper Output Tray
Canon Red Label Superior <WOP111> Canon Océ Office Colour Paper <SAT213> High Resolution Paper <HR-101N>	Approx. 50 sheets

Paper other than Genuine Canon Paper

Common Name	Paper Output Tray
Plain Paper (including recycled paper)	Approx. 50 sheets (Legal: 10 sheets)

When continuing printing with paper other than the above, we recommend removing already printed paper or envelopes from the paper output tray to avoid smearing or discoloration.

Unsupported Media Types

Do not use the following types of paper. Using such paper will cause not only unsatisfactory results, but also the printer to jam or malfunction.

- Folded, curled, or wrinkled paper
- Damp paper
- Paper that is too thin (weighing less than 17 lb (64 g /m^2))
- Paper that is too thick (plain paper weighing more than 28 lb (105 g /m^2), except for Canon genuine paper)
- Paper thinner than a postcard, including plain paper or notepad paper cut to a small size (when printing on paper smaller than A5)
- Picture postcards
- Postcards
- Envelopes with a double flap
- Envelopes with an embossed or treated surface
- Envelopes whose gummed flaps are already moistened and adhesive
- Any type of paper with holes
- Paper that is not rectangular
- Paper bound with staples or glue
- Paper with an adhesive surface on the back such as label seal
- Paper decorated with glitter, etc.

Handling Paper

- Be careful not to rub or scratch the surfaces of any types of paper when handling.
- Hold the paper as closely as possible to its edges and try not to touch the printing surface. The print quality may be degraded if the printing surface is smudged with sweat or oil that comes from your hands.
- Do not touch the printed surface until the ink is dried. Even when the ink is dried, be careful not to touch the printed surface as much as possible when handling. Due to the nature of the pigment ink, the ink on the printed surface may be removed when being rubbed or scratched.
- Take out only the necessary number of paper from the package, just before printing.
- To avoid curling, when you do not print, put unused paper back into the package and keep it on a level surface. And also, store it avoiding heat, humidity, and direct sunlight.

Printing

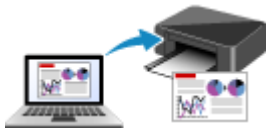

Printing from Computer

Printing from Smartphone/Tablet

Printing from Digital Camera

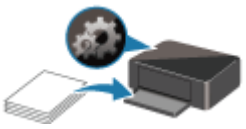

Paper Settings

Printing from Computer

- Printing from Application Software (Windows Printer Driver)
- Printing from Application Software (macOS AirPrint)
- Printing Using Canon Application Software
- Printing Using a Web Service

Printing from Application Software (Windows Printer Driver)

- Basic Printing Setup Basic
- Various Printing Methods
- Changing the Print Quality and Correcting Image Data
- Overview of the Printer Driver
- Printer Driver Description
- Updating the Printer Driver

Basic Printing Setup

This section describes settings on the **Quick Setup** tab used for basic printing.

Basic Printing Setup

1. Check that printer is turned on

2. Load paper in printer

3. Open printer driver's setup screen

4. Select frequently used settings

   On the **Quick Setup** tab, use **Commonly Used Settings** to select from predefined print settings. When you select a print setting, the settings for **Additional Features**, **Media Type**, and **Printer Paper Size** automatically switch to the predefined values.

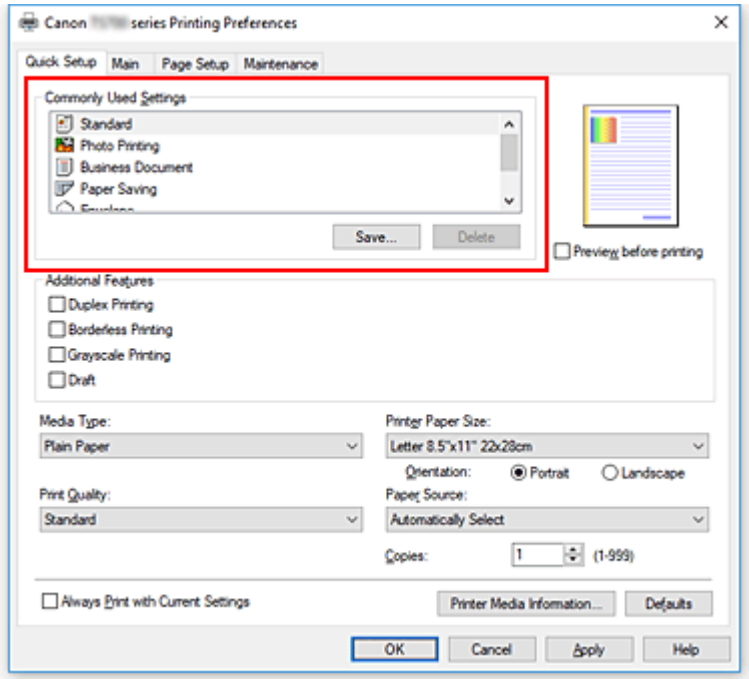

5. Select print quality

   For **Print Quality**, select from **High**, **Standard**, or **Draft**.

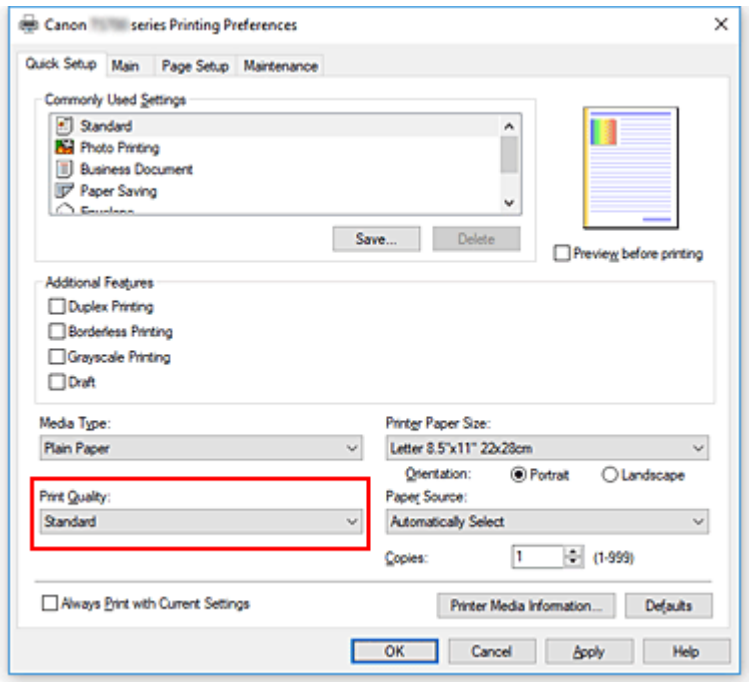

Important

- The print quality selections will differ depending on which print setting you select.

6. Select paper source

For **Paper Source**, select **Automatically Select**, **Rear Tray**, or **Cassette**, whichever matches your purpose.

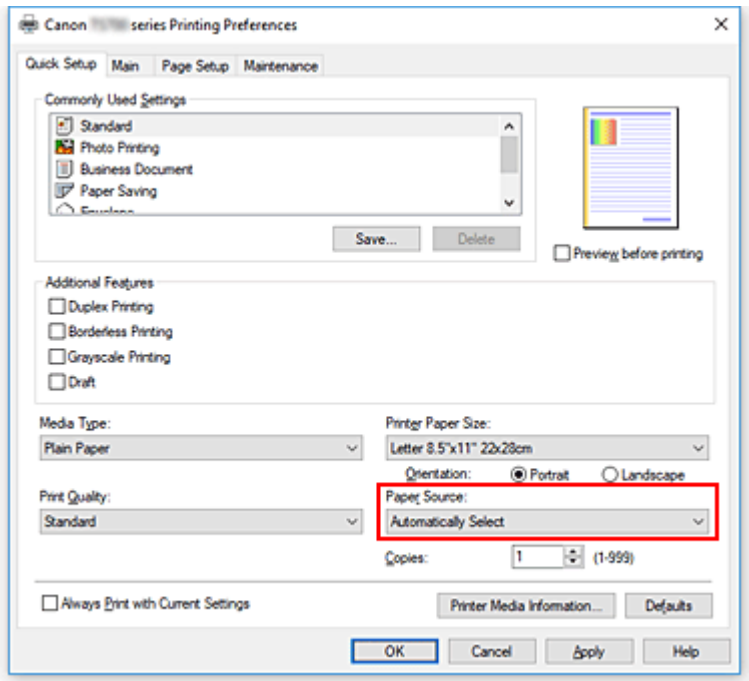

Important

- The paper source settings that can be selected may differ depending on the paper type and size.

7. Click **OK**

The printer will now print using these settings.

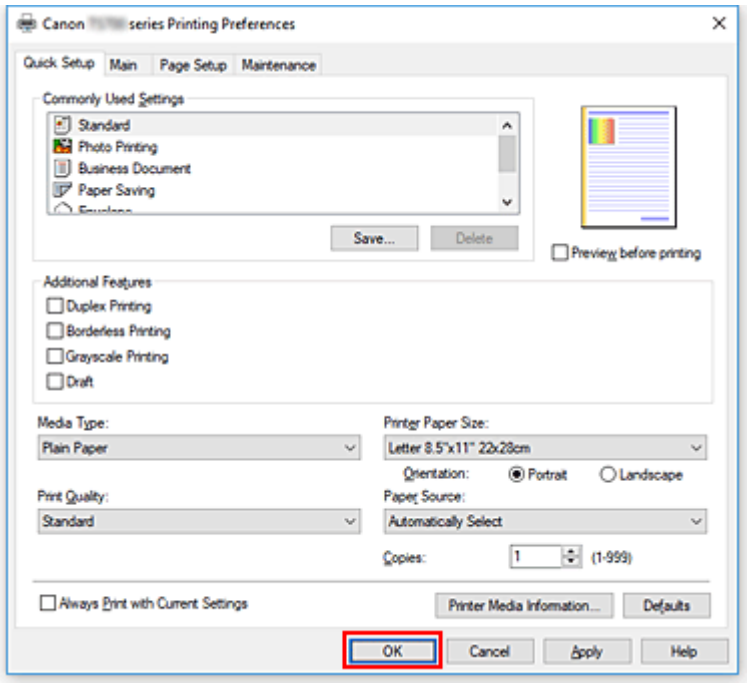

Important

- When you select **Always Print with Current Settings**, the settings on the **Quick Setup**, **Main**, and **Page Setup** tabs are saved, and those settings are used in subsequent printings.
- To register the current settings as a new preset, click **Save...** under **Commonly Used Settings**.

Note

- If the paper settings in the printer driver differ from the paper information registered on the printer, an error may occur. For instructions on what to do if an error occurs, see "Paper Settings."
  To check the current printer settings or to apply the printer settings to the printer driver, display the **Quick Setup** tab, click **Printer Media Information...**, and specify the settings in the dialog box that appears.
  For details about the paper information to be registered on the printer, see the following:
  - Paper Settings on the Printer Driver and the Printer (Media Type)
  - Paper Settings on the Printer Driver and the Printer (Paper Size)

Checking Printer Settings and Applying Settings to Printer Driver

1. Open printer driver setup window

2. On **Quick Setup** tab, click **Printer Media Information...**

   The **Printer Media Information** dialog box appears.

3. Select **Paper Source**

From **Paper Source**, check the setting or select a new paper source.
The current printer settings appear in **Media Type** and **Page Size**.

4. Apply settings

To apply the printer settings to the printer driver, click **Set**.

Note

- If the Type on the printer is set to IJ Hagaki, Hagaki K, or Hagaki, or if the Page size on the printer is set to 2L/5"x7", click **Set** to display the dialog box.
  Select the media type and paper size that match your purpose, and then click **OK**.
- If the Type and the Page size on the printer are not set or are set to Others, **Set** will be grayed out and cannot be clicked.
- If communication with the printer is disabled, the **Printer Media Information...** dialog box will not appear or the printer driver will not be able to obtain printer media information.

Paper Settings on the Printer Driver and the Printer (Media Type)

When you use this printer, selecting a media type and paper size that matches the print purpose will help you achieve the best print results.
You can use the following media types on this printer.

Canon genuine papers (Document Printing)

Media name <Model No.>	Media Type in the printer driver	Paper information registered on the printer
Canon Red Label Superior <WOP111>	**Plain Paper**	Plain paper
Canon Océ Office Colour Paper <SAT213>	**Plain Paper**	Plain paper
High Resolution Paper <HR-101N>	**High Resolution Paper**	High Res

Canon genuine papers (Photo Printing)

Media name <Model No.>	Media Type in the printer driver	Paper information registered on the printer
Photo Paper Plus Glossy II <PP-201/PP-208/PP-301>	**Photo Paper Plus Glossy II**	PlusGlossyII
Photo Paper Pro Platinum <PT-101>	**Photo Paper Pro Platinum**	ProPlatinum
Photo Paper Pro Luster <LU-101>	**Photo Paper Pro Luster**	Pro Luster
Photo Paper Plus Semi-gloss <SG-201>	**Photo Paper Plus Semi-gloss**	Semi-gloss
Glossy Photo Paper "Everyday Use" <GP-501/ GP-508>	**Glossy Photo Paper**	Glossy
Photo Paper Glossy <GP-701>	**Glossy Photo Paper**	Glossy
Matte Photo Paper <MP-101>	**Matte Photo Paper**	Matte

Canon genuine papers (Original Product)

Media name <Model No.>	Media Type in the printer driver	Paper information registered on the printer
Restickable Photo Paper <RP-101>	**Glossy Photo Paper**	Glossy
Removable Photo Stickers <PS-308R>	**Glossy Photo Paper**	Glossy
Magnetic Photo Paper <MG-101/PS-508>	**Glossy Photo Paper**	Glossy

Commercially available papers

Media name	Media Type in the printer driver	Paper information registered on the printer
Plain Paper (including recycled paper)	**Plain Paper**	Plain paper
Envelopes	**Envelope**	Envelope
T-Shirt Transfers	**T-Shirt Transfers**	Others
Greeting Cards	**Inkjet Greeting Card**	Others
Card Stock	**Card Stock**	Card stock

Paper Settings on the Printer Driver and the Printer (Paper Size)

When you use this printer, selecting a paper size that matches the print purpose will help you achieve the best print results.
You can use the following paper sizes on this printer.

Printer Paper Size in the printer driver	Cassette paper information registered on the printer
Letter 8.5"x11" 22x28cm	Letter
Legal 8.5"x14" 22x36cm	Legal
A5	A5
A4	A4
B5	B5
4"x6" 10x15cm	KG/4"x6"
5"x7" 13x18cm	2L/5"x7"
7"x10" 18x25cm	7"x10"
8"x10" 20x25cm	8"x10"
L 89x127mm	L
2L 127x178mm	2L/5"x7"
Square 3.5"x3.5" 9x9cm	Square 3.5"
Square 4"x4" 10x10cm	Square 4"
Square 5"x5" 13x13cm	Square 5"
Hagaki 100x148mm	Hagaki
Hagaki 2 200x148mm	Hagaki 2
Envelope Com 10	Env. Com 10
Envelope DL	Envelope DL
Nagagata 3 4.72"x9.25"	Nagagata 3
Nagagata 4 3.54"x8.07"	Nagagata 4
Yougata 4 4.13"x9.25"	Yougata 4
Yougata 6 3.86"x7.48"	Yougata 6
Card 2.17"x3.58" 55x91mm	Card 2"x3.5"

Custom Size	Others

Various Printing Methods

- Setting a Page Size and Orientation
- Setting the Number of Copies and Printing Order
- Execute Borderless Printing
- Scaled Printing
- Page Layout Printing
- Tiling/Poster Printing
- Duplex Printing
- Setting Up Envelope Printing
- Printing on Postcards

Setting a Page Size and Orientation

The paper size and orientation are essentially determined by the application software. When the page size and orientation set for **Page Size** and **Orientation** on the **Page Setup** tab are same as those set with the application software, you do not need to select them on the **Page Setup** tab.

When you are not able to specify them with the application software, the procedure for selecting a page size and orientation is as follows:
You can also set page size and orientation on the **Quick Setup** tab.

1. Open the printer driver setup window

2. Select the paper size

   Select a page size from the **Page Size** list on the **Page Setup** tab.

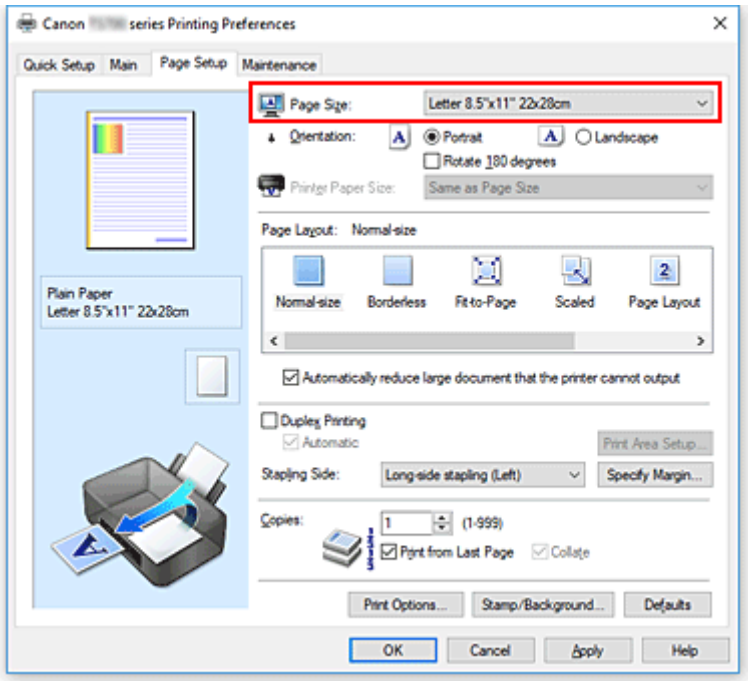

3. Set **Orientation**

   Select **Portrait** or **Landscape** for **Orientation**. Check **Rotate 180 degrees** check box when you want to perform printing with the original being rotated 180 degrees.

4. Click **OK**

   When you execute print, the document will be printed with the selected page size and the orientation.

Note

- If **Normal-size** is selected for **Page Layout**, then **Automatically reduce large document that the printer cannot output** is displayed.
  Normally, you can leave the check box checked. During printing, if you do not want to reduce large documents that cannot be printed on the printer, uncheck the check box.

Setting the Number of Copies and Printing Order

You can also set the number of copies on the **Quick Setup** tab.

1. Open the printer driver setup window

2. Specify the number of copies to be printed

   For **Copies** on the **Page Setup** tab, specify the number of copies to be printed.

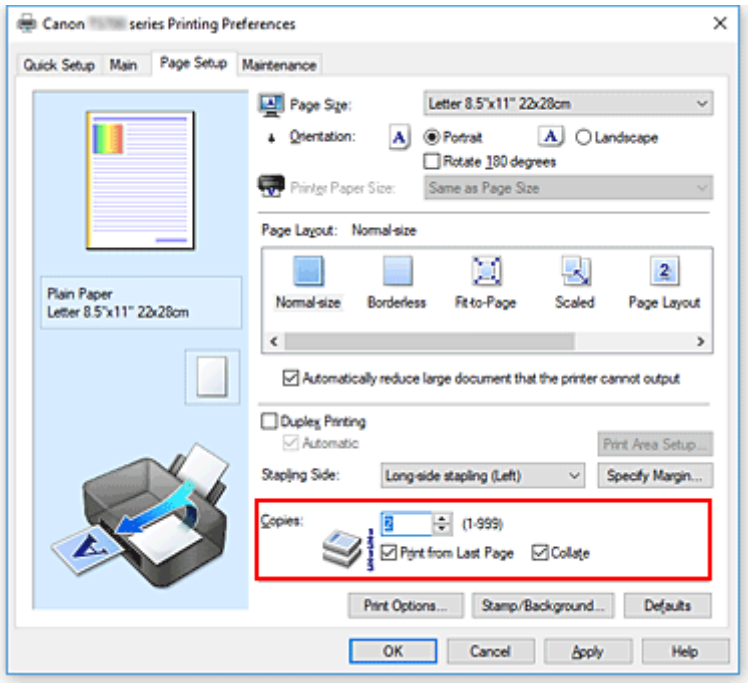

3. Specify the print order

   Check the **Print from Last Page** check box when you want to print from the last page in order, and uncheck the check box when you want to print from the first page.
   Check the **Collate** check box when you are printing multiple copies of a document and want to print out all pages in each copy together. Uncheck this check box when you want to print all pages with the same page number together.

   - **Print from Last Page**: ☑ /**Collate**: ☑

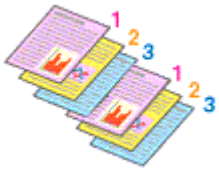

   - **Print from Last Page**: ☐ /**Collate**: ☑

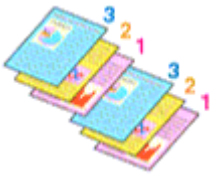

- **Print from Last Page**: ☑ /**Collate**: ☐

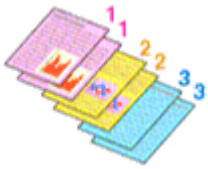

- **Print from Last Page**: ☐ /**Collate**: ☐

4. Click **OK**

When you execute print, the specified number of copies will be printed with the specified printing order.

Important

- When the application software that you used to create the document has the same function, specify the settings on the printer driver. However, if the print results are not acceptable, specify the function settings on the application software. When you specify the number of copies and the printing order with both the application software and this printer driver, the number of copies may be multiplied numbers of the two settings or the specified printing order may not be enabled.
- **Print from Last Page** appears grayed out and is unavailable when **Tiling/Poster** is selected for **Page Layout**.
- When **Booklet** is selected for **Page Layout**, **Print from Last Page** and **Collate** appear grayed out and cannot be set.
- When **Duplex Printing** is selected, **Print from Last Page** appears grayed out and cannot be set.

Note

- By setting both **Print from Last Page** and **Collate**, you can perform printing so that papers are collated one by one starting from the last page.
  These settings can be used in combination with **Normal-size**, **Borderless**, **Fit-to-Page**, **Scaled**, and **Page Layout**.

Execute Borderless Printing

The borderless printing function allows you to print data without any margin by enlarging the data so that it extends slightly off the paper. In standard printing, margins are created around the document area. However, in borderless printing function, these margins are not created. When you want to print data such as a photo without providing any margin around it, set borderless printing.

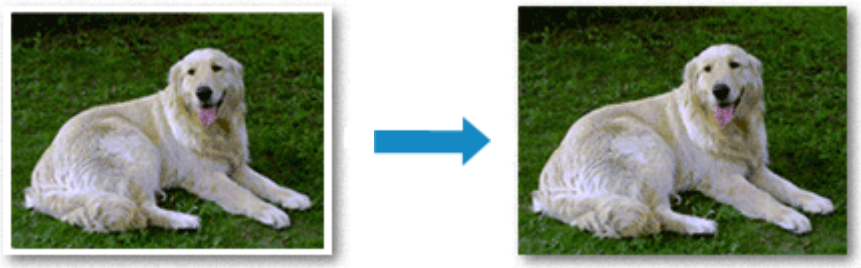

You can also set borderless printing in **Additional Features** on the **Quick Setup** tab.

Note

- You can also set **Amount of extension** on the operation panel of the printer, but the settings on the printer driver will be prioritized.

Setting Borderless Printing

1. Open the printer driver setup window

2. Set borderless printing

   Select **Borderless** from the **Page Layout** list on the **Page Setup** tab.

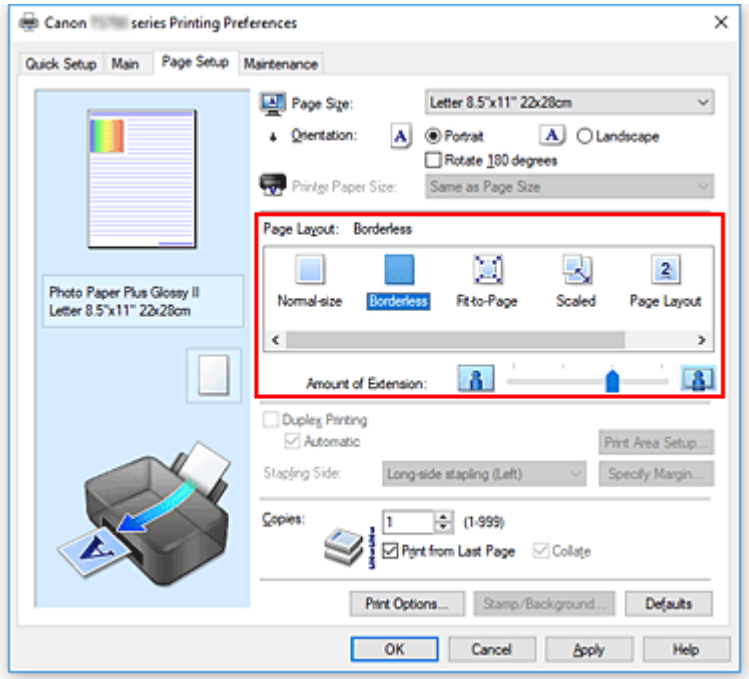

Click **OK** when the confirmation message appears.
When a message prompting you to change the media type appears, select a media type from the list and click **OK**.

3. Check the paper size

Check the **Page Size** list. When you want to change it, select another page size from the list. The list displays only sizes that can be used for borderless printing.

4. Adjust the amount of extension from the paper

If necessary, adjust the amount of extension using the **Amount of Extension** slider.
Moving the slider to the right increases the amount extending off the paper, and moving the slider to the left decreases the amount.
It is recommended to set the slider at the second position from the right for most cases.

Important

- When the **Amount of Extension** slider is set to the rightmost position, the back side of the paper may become smudged.

5. Click **OK**

When you execute print, the data is printed without any margins on the paper.

Important

- When a page size that cannot be used for borderless printing is selected, the size is automatically changed to the valid page sizes for borderless printing.
- When **Borderless** is selected, the **Printer Paper Size**, **Duplex Printing**, **Stapling Side** settings, and the **Stamp/Background...** button on the **Page Setup** tab appear grayed out and are unavailable.
- When **Envelope**, **High Resolution Paper**, or **T-Shirt Transfers** is selected from the **Media Type** list on the **Main** tab, you cannot perform borderless printing.
- Depending on the type of the media used during borderless printing, the print quality may deteriorate at the top and bottom of the sheet or stains may form.
- When the ratio of the height to the width differs from the image data, a portion of the image may not be printed depending on the size of the media used.
  In this case, crop the image data with an application software according to the paper size.

Note

- When **Plain Paper** is selected for **Media Type** on the **Main** tab, borderless printing is not recommended. Therefore, the message for media selection appears.
  When you are using plain paper for test printing, select **Plain Paper**, and click **OK**.

Expanding the Range of the Document to Print

Setting a large amount of extension allows you to perform borderless printing with no problems. However, the portion of the document extending off the paper range will not be printed and for this reason, the subjects around the perimeter of a photo may not be printed.

When you are not satisfied with the result of borderless printing, reduce the amount of extension. The extension amount decreases as the **Amount of Extension** slider is moved to the left.

Important

- When the amount of extension is decreased, an unexpected margin may be produced on the print, depending on the size of the paper.

Note

- When the **Amount of Extension** slider is set to the leftmost position, image data will be printed in the full size. If you set this when printing the address side of a postcard, the postal code of the sender is printed in the correct position.
- When **Preview before printing** is checked on the **Main** tab, you can confirm whether there will be no margin before printing.

Scaled Printing

1. Open the printer driver setup window

2. Set scaled printing

   Select **Scaled** from the **Page Layout** list on the **Page Setup** tab.

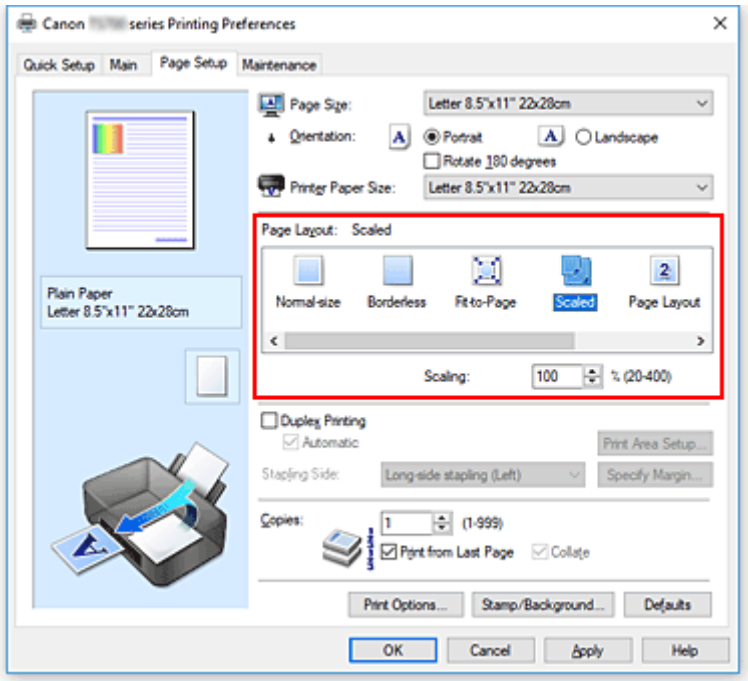

3. Select the paper size of the document

   Using **Page Size**, select the page size that is set with your application software.

4. Set the scaling rate by using one of the following methods:

   - Select a **Printer Paper Size**

     When the printer paper size is smaller than the **Page Size**, the page image will be reduced. When the printer paper size is larger than the **Page Size**, the page image will be enlarged.

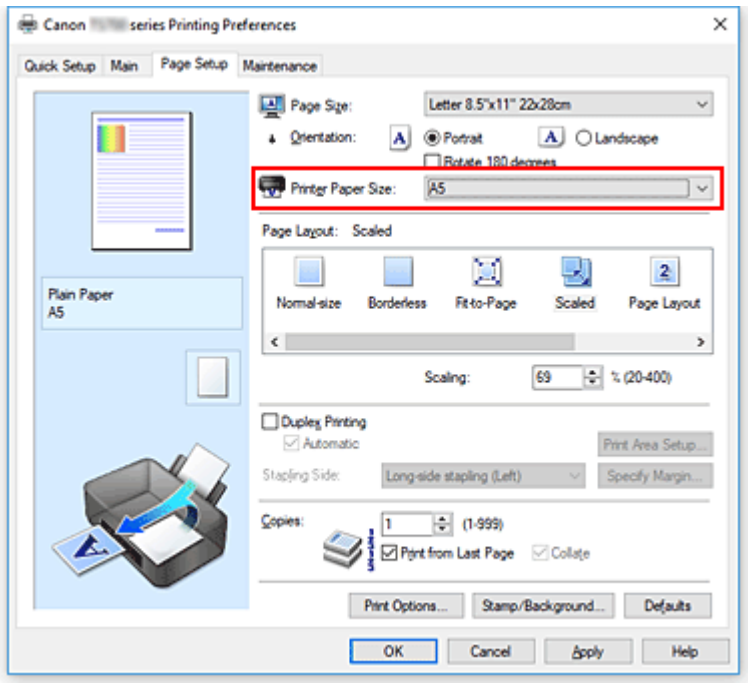

- Specify a scaling factor

  Directly type in a value into the **Scaling** box.

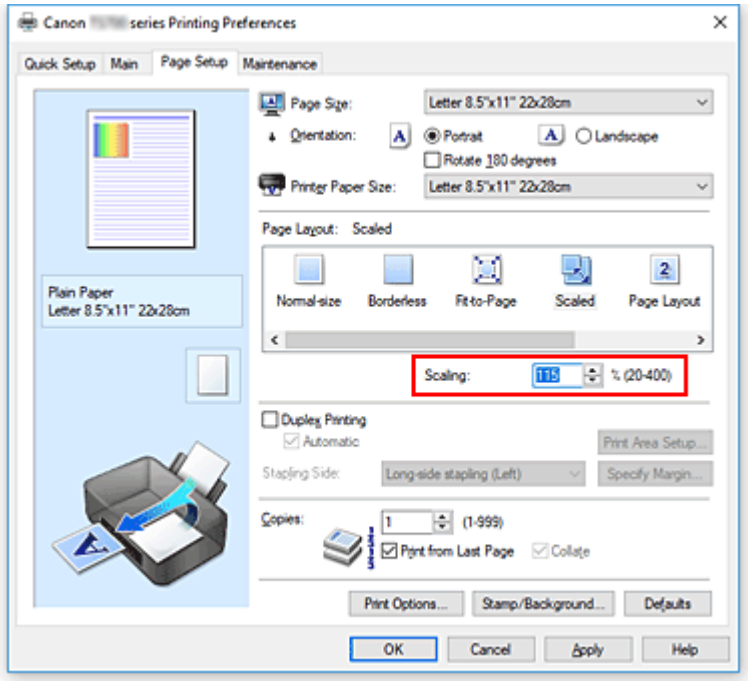

  The current settings are displayed in the settings preview on the left side of the printer driver.

5. Click **OK**

When you execute print, the document will be printed with the specified scale.

Important

- When the application software which you used to create the original has the scaled printing function, configure the settings on your application software. You do not need to configure the same setting in the printer driver.

Note

- Selecting **Scaled** changes the printable area of the document.

Page Layout Printing

The page layout printing function allows you to print more than one page image on a single sheet of paper.

1. Open the printer driver setup window

2. Set page layout printing

   Select **Page Layout** from the **Page Layout** list on the **Page Setup** tab.
   The current settings are displayed in the settings preview on the left side of the printer driver.

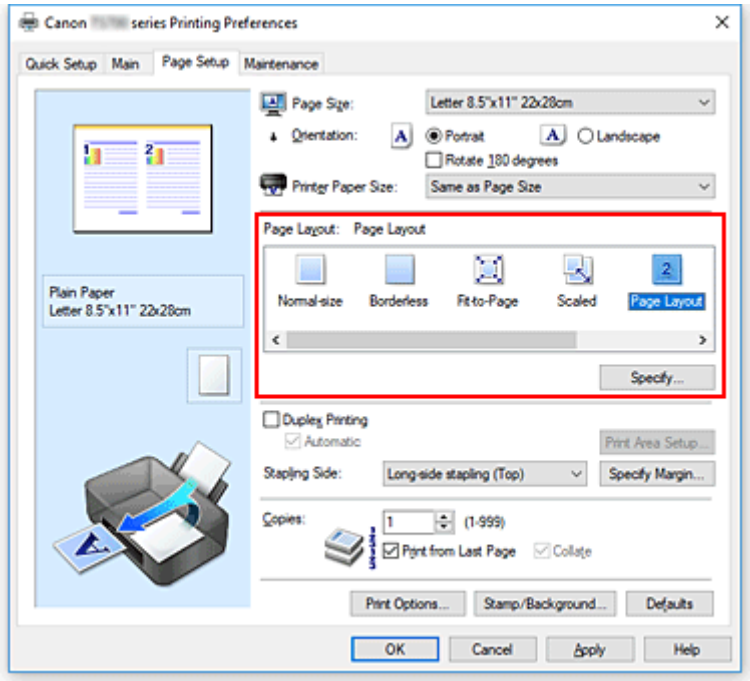

3. Select the print paper size

   Select the size of the paper loaded in the printer from the **Printer Paper Size** list.

4. Set the number of pages to be printed on one sheet and the page order

   If necessary, click **Specify...**, specify the following settings in the **Page Layout Printing** dialog box, and click **OK**.

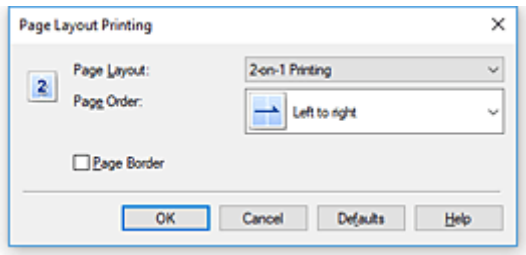

Page Layout

To change the number of pages to be printed on a single sheet of paper, select the number of pages from the list.

Page Order

To change the page arrangement order, select a placement method from the list.

Page Border

To print a page border around each document page, check this check box.

5. Complete the setup

Click **OK** on the **Page Setup** tab.
When you execute print, the specified number of pages will be arranged on each sheet of paper in the specified order.

Tiling/Poster Printing

The tiling/poster printing function allows you to enlarge image data, divide it into several pages, and print these pages on separate sheets of paper. You can also paste the pages together to create a large print like a poster.

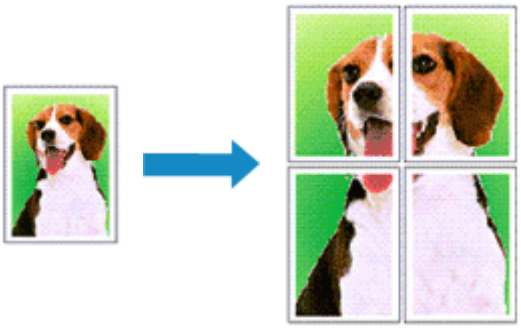

Setting Tiling/Poster Printing

1. Open the printer driver setup window

2. Set tiling/poster printing

   Select **Tiling/Poster** from the **Page Layout** list on the **Page Setup** tab.
   The current settings are displayed in the settings preview on the left side of the printer driver.

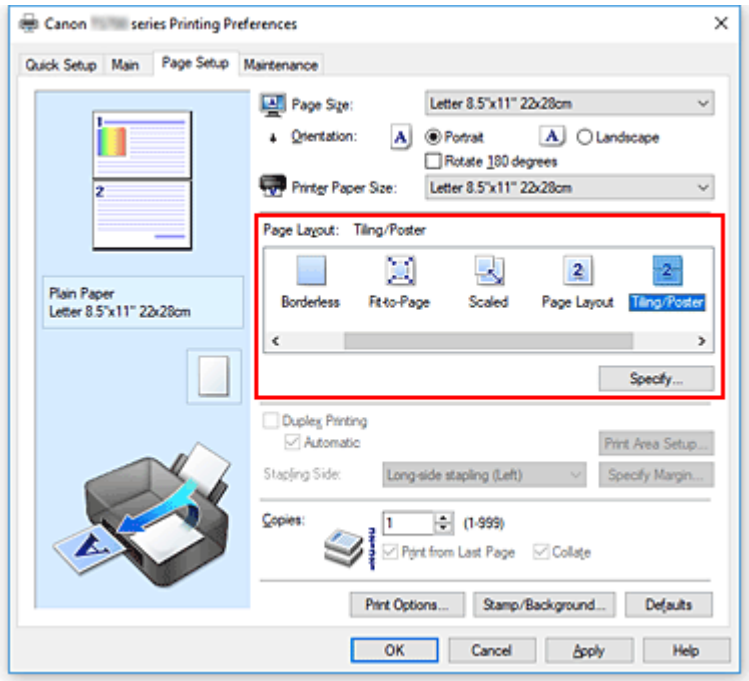

3. Select the print paper size

   Select the size of the paper loaded in the printer from the **Printer Paper Size** list.

4. Set the number of image divisions and the pages to be printed

If necessary, click **Specify...**, specify the following settings in the **Tiling/Poster Printing** dialog box, and then click **OK**.

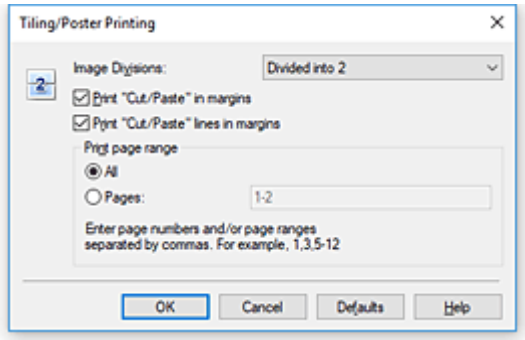

Image Divisions

Select the number of divisions (vertical x horizontal).
As the number of divisions increases, the number of sheets used for printing increases. If you are pasting pages together to create a poster, increasing the number of divisions allows you to create a larger poster.

Print "Cut/Paste" in margins

To leave out words "Cut" and "Paste", uncheck this check box.

Note

- This feature may be unavailable when certain printer drivers or operating environments are used.

Print "Cut/Paste" lines in margins

To leave out cut lines, uncheck this check box.

Print page range

Specifies the printing range. Select **All** under normal circumstances.
To reprint only a specific page, select **Pages** and enter the page number you want to print. To specify multiple pages, enter the page numbers by separating them with commas or by entering a hyphen between the page numbers.

Note

- You can also specify the print range by clicking the pages in the settings preview.

5. Complete the setup

Click **OK** on the **Page Setup** tab.
When you execute print, the document will be divided into several pages during printing.

Printing Only Specific Pages

If ink becomes faint or runs out during printing, you can reprint only the specific pages by following the procedure below:

1. Set the print range

In the settings preview on the left of the **Page Setup** tab, click the pages that do not need to be printed.
The pages that were clicked are deleted, and only the pages to be printed are displayed.

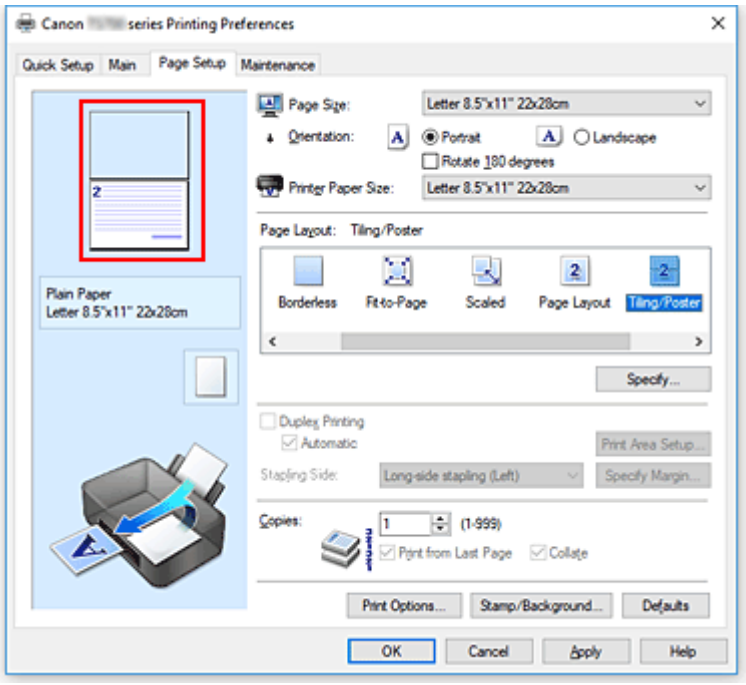

Note

- Click the deleted pages to display them again.
- Right-click the settings preview to select **Print all pages** or **Delete all pages**.

2. Complete the setup

After completing the page selection, click **OK**.
When you execute print, only specified pages will be printed.

Important

- Since tiling/poster printing enlarges the document when printing it, the print results may become coarse.

Duplex Printing

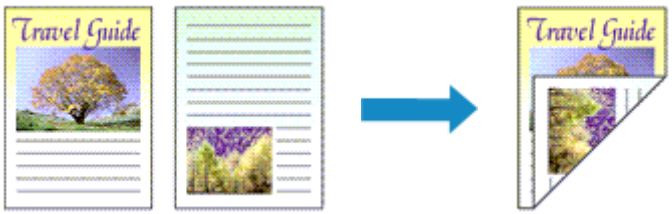

You can also set duplex printing in **Additional Features** on the **Quick Setup** tab.

Performing Automatic Duplex Printing

You can perform the duplex printing without having to turn over the paper.

1. Open the printer driver setup window

2. Set automatic duplex printing

   Check the **Duplex Printing** check box on the **Page Setup** tab and confirm that **Automatic** is checked.

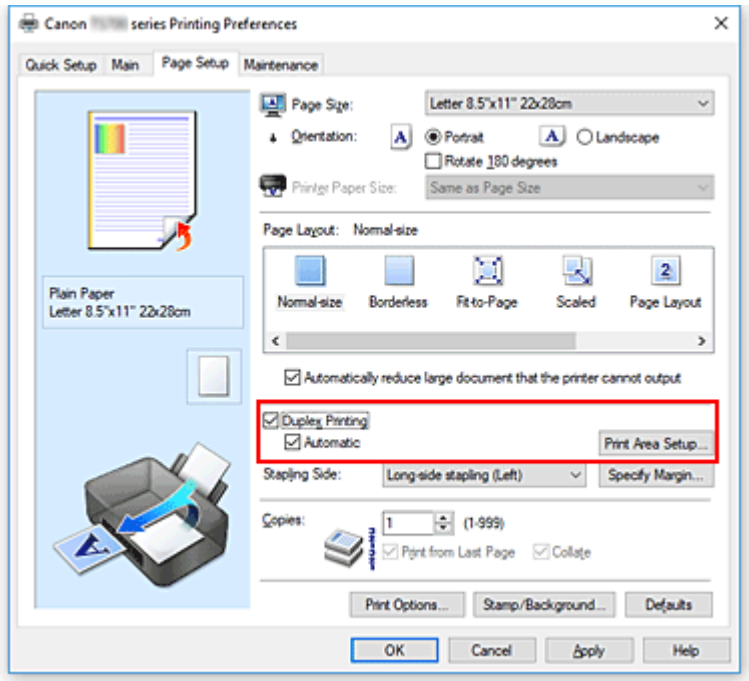

3. Select the layout

   Select **Normal-size**, **Fit-to-Page**, **Scaled**, or **Page Layout** from the **Page Layout** list.

4. Set the print area

When you perform duplex printing, the print area of the document becomes slightly narrower than usual and the document may not fit on one page.
Click **Print Area Setup...**, select one of the following process methods, and then click **OK**.

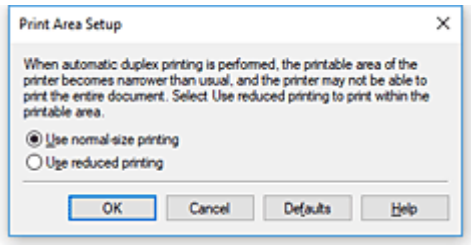

Use normal-size printing
Print without reducing the page.

Use reduced printing
Reduce the page slightly during printing.

5. Specify the side to be stapled

The best **Stapling Side** is selected automatically from the **Orientation** and **Page Layout** settings. To change the setting, select another stapling side from the list.

6. Set the margin width

If necessary, click **Specify Margin...** and set the margin width, and then click **OK**.

7. Complete the setup

Click **OK** on the **Page Setup** tab.
When you execute print, duplex printing will be started.

Performing Duplex Printing Manually

You can perform the duplex printing manually.

1. Open the printer driver setup window

2. Set duplex printing

Check the **Duplex Printing** check box and uncheck the **Automatic** check box on the **Page Setup** tab.

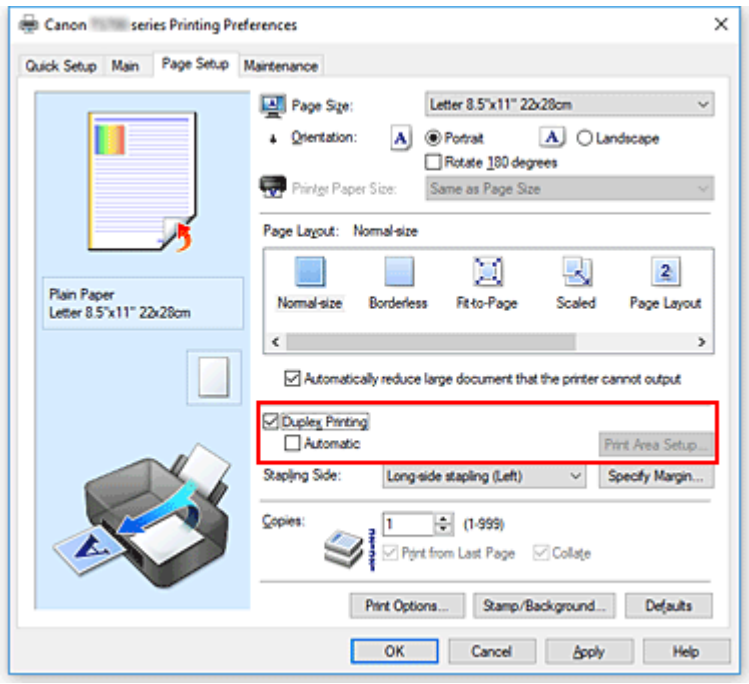

3. Select the layout

   Select **Normal-size**, **Fit-to-Page**, **Scaled**, or **Page Layout** from the **Page Layout** list.

4. Specify the side to be stapled

   The best **Stapling Side** is selected automatically from the **Orientation** and **Page Layout** settings. To change the setting, select another stapling side from the list.

5. Set the margin width

   If necessary, click **Specify Margin...** and set the margin width, and then click **OK**.

6. Complete the setup

   Click **OK** on the **Page Setup** tab.
   When you execute print, the document is first printed on one side of a sheet of paper. After one side is printed, reload the paper correctly according to the message.
   Then click **Start Printing** to print the opposite side.

Important

- When a media type other than **Plain Paper**, **Ink Jet Hagaki (A)**, **Hagaki K (A)**, **Hagaki (A)**, or **Hagaki** is selected from the **Media Type** list on the **Main** tab, **Duplex Printing** appears grayed out and is unavailable.
- When **Borderless**, **Tiling/Poster**, or **Booklet** is selected from the **Page Layout** list, **Duplex Printing** and **Stapling Side** appear grayed out and are unavailable.
- **Duplex Printing** can be performed only when one of the following paper sizes is selected from **Page Size** on the **Page Setup** tab.
  - **Letter 8.5"x11" 22x28cm**, **A5**, **A4**, **B5**, **Hagaki 100x148mm**

- After printing the front page, there is an ink drying wait time before starting to print the back page (Operation stops temporarily). Do not touch the paper during this time. You can change the ink drying wait time at **Custom Settings** in the Canon IJ Printer Assistant Tool.
- When you use the automatic duplex printing function to print a postcard, print the address side first and then print the message side.

Related Topic

- Changing the Printer Operation Mode

Setting Up Envelope Printing

1. Load envelope on the printer

2. Open the printer driver setup window

3. Select the media type

   Select **Envelope** from **Commonly Used Settings** on the **Quick Setup** tab.

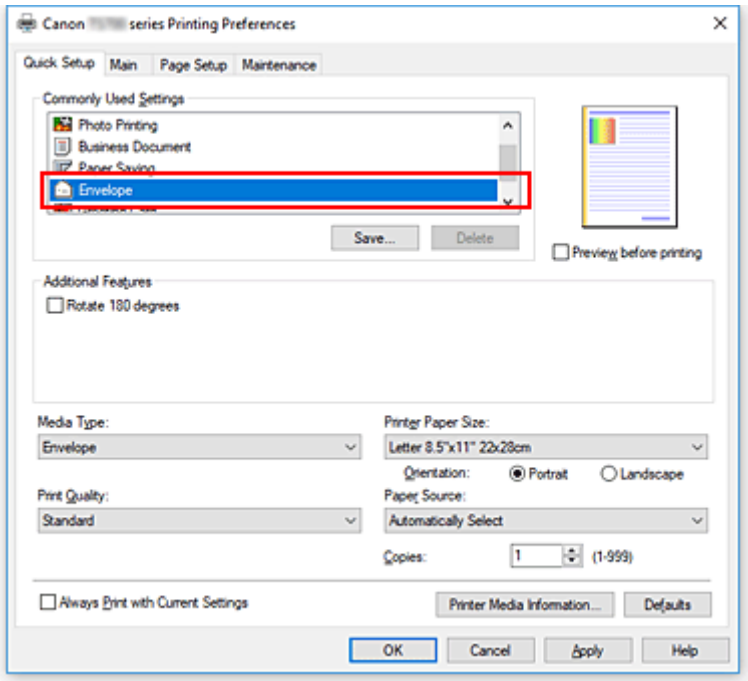

4. Select the paper size

   When the **Envelope Size Setting** dialog box is displayed, select **Envelope Com 10**, **Envelope DL**, **Yougata 4 4.13"x9.25"**, or **Yougata 6 3.86"x7.48"**, and then click **OK**.

5. Set the orientation

   To print the addressee horizontally, select **Landscape** for **Orientation**.

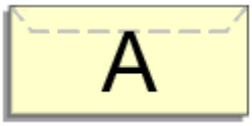

Note

- If **Envelope Com 10**, **Envelope DL**, **Yougata 4 4.13"x9.25"**, or **Yougata 6 3.86"x7.48"** is selected for **Printer Paper Size**, the printer rotates the paper 90 degrees to the left to print, regardless of the **Rotate 90 degrees left when orientation is [Landscape]** setting for **Custom Settings** in the Canon IJ Printer Assistant Tool.

6. Select the print quality

   Select **High** or **Standard** that matches your purpose for **Print Quality**.

7. Click **OK**

   When you execute print, the information is printed on the envelope.

Important

- When you execute envelope printing, guide messages are displayed.
  To hide the guide messages, check the **Do not show this message again** check box.
  To show the guide again, click the **View Printer Status** button on the **Maintenance** tab, and start the Canon IJ Status Monitor.
  Then click **Envelope Printing** from **Display Guide Message** of the **Option** menu to enable the setting.

Note

- If the paper settings in the printer driver differ from the paper information registered on the printer, an error may occur. For instructions on what to do if an error occurs, see "Paper Settings."
  To check the current printer settings or to apply the printer settings to the printer driver, click **Printer Media Information...** from the **Quick Setup** tab, and specify the settings in the dialog box that appears.
  For details about the paper information to be registered on the printer, see the following:
  - Paper Settings on the Printer Driver and the Printer (Media Type)
  - Paper Settings on the Printer Driver and the Printer (Paper Size)

Printing on Postcards

1. Load postcard on the printer

2. Open the printer driver setup window

3. Select commonly used settings

   Display the **Quick Setup** tab, and for **Commonly Used Settings**, select **Standard**.

4. Select the media type

   For **Media Type**, select **Ink Jet Hagaki (A)**, **Ink Jet Hagaki**, **Hagaki K (A)**, **Hagaki K**, **Hagaki (A)**, or **Hagaki**.

   Important

   - This printer cannot print on postcards that have photos or stickers attached.
   - When you use the automatic duplex printing function to print a postcard, print the address side first and then print the message side.
   - When printing on each side of a postcard separately, you will get cleaner printing if you print the message side first and then print the address side.
   - The paper settings on the printer driver are different, depending on whether you are printing on the address side or the message side.
     To check the current printer settings or to apply the printer settings to the printer driver, click **Printer Media Information...** from the **Quick Setup** tab, and specify the settings in the dialog box that appears.
     For details about the paper information to be registered to the printer driver and on the printer, see the following:
     - Paper Settings on the Printer Driver and the Printer (Media Type)
     - Paper Settings on the Printer Driver and the Printer (Paper Size)
   - When you use the automatic duplex printing function, register the paper information for the side to be printed first.

5. Select the paper size

   For **Printer Paper Size**, select **Hagaki 100x148mm** or **Hagaki 2 200x148mm**.

   Important

   - Return postcards can be used only when you print them from the computer.
   - When printing a return postcard, always set the paper size to **Hagaki 2 200x148mm** from your application software or the printer driver.
   - Do not fold the return postcard. If a crease is formed, the printer will not be able to feed the postcard properly, and this condition will cause line shifts or a paper jam.
   - With return postcards, automatic duplex printing and borderless printing cannot be used.

6. Set the print orientation

   To print the address horizontally, set **Orientation** to **Landscape**.

7. Select the print quality

   For **Print Quality**, select **High** or **Standard**, according to your purpose.

8. Click **OK**

   When you execute printing, the data will be printed onto the postcard.

Important

- If you want to display a guide message when performing postcard printing, open the **Maintenance** tab and click **View Printer Status** to start the Canon IJ Status Monitor.
  On the **Option** menu, choose **Display Guide Message** and click **Hagaki Printing** to enable the setting.
  To hide these guide messages, select the **Do not show this message again** check box.
- When printing on media other than postcards, load the media according to usage method of that media, and click **Start Printing**.

Overview of the Printer Driver

Canon IJ Printer Driver

- Opening Printer Driver's Setup Screen

Canon IJ Status Monitor

- Checking Ink Status from Your Computer

Instructions for Use (Printer Driver)

Canon IJ Printer Driver

The Canon IJ printer driver (simply called printer driver below) is software that you install onto your computer so that it can communicate with the printer.

The printer driver converts the print data created by your application software into data that your printer can understand, and sends the converted data to the printer.

Because different printers support different data formats, you need a printer driver that supports your printer.

Installing the Printer Driver

To install the printer driver, install the driver from **Start Setup** on the setup CD-ROM that came with your printer.

Specifying the Printer Driver

To specify the printer driver, open the **Print** dialog box of the application software you are using, and select "Canon XXX" (where "XXX" is your model name).

Displaying the Manual from the Printer Driver

To display the description of a setup tab from the printer driver's setup screen, click **Help** on that tab.

Related Topic

- Opening Printer Driver's Setup Screen

Opening Printer Driver's Setup Screen

You can display the printer driver's setup screen from your application software or by clicking the printer icon.

Displaying the Printer Driver's Setup Screen from Your Application Software

Perform this procedure to set up the print settings during printing.

1. Select print command from application software

   The **Print** command can generally be found in the **File** menu.

2. Select your printer model, and click **Preferences** (or **Properties**)

   The printer driver's setup screen appears.

   Note

   - Depending on the application software you are using, the command and menu names, and the number of steps may vary. For details, refer to the operating instructions of your application software.

Displaying the Printer Driver's Setup Screen by Clicking the Printer Icon

From the setup screen you can perform printer maintenance operations such as print head cleaning, or set print settings to be shared by all application software.

1. Select **Control Panel** -> **Hardware and Sound** -> **Devices and Printers**

2. Right-click the icon of your model. When the menu appears, select **Printing preferences**

   The printer driver's setup screen appears.

   Important

   - Opening the printer driver setup window through **Printer properties** displays such tabs regarding the Windows functions as the **Ports** (or **Advanced**) tab. Those tabs do not appear when opening through **Printing preferences** or application software. For tabs regarding Windows functions, refer to the user's manual for the Windows.

Canon IJ Status Monitor

The Canon IJ Status Monitor is an application software that shows the status of the printer and the progress of printing. You will know the status of the printer with graphics, icons, and messages.

Launching the Canon IJ Status Monitor

The Canon IJ Status Monitor launches automatically when print data is sent to the printer. When launched, the Canon IJ Status Monitor appears as a button on the task bar.

Click the button of the status monitor displayed on the task bar. The Canon IJ Status Monitor appears.

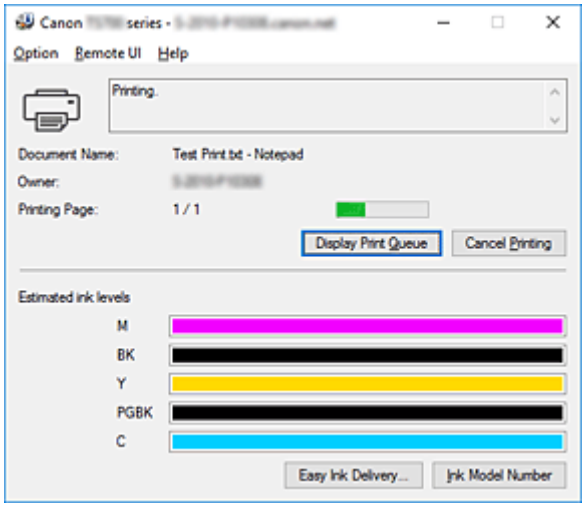

Note

- To open the Canon IJ Status Monitor when the printer is not printing, open the printer driver setup window and click **View Printer Status** on the **Maintenance** tab.
- The information displayed on the Canon IJ Status Monitor may differ depending on the country or region where you are using your printer.

When Errors Occur

The Canon IJ Status Monitor is automatically displayed if an error occurs (e.g., if the printer runs out of paper or if the ink is low).

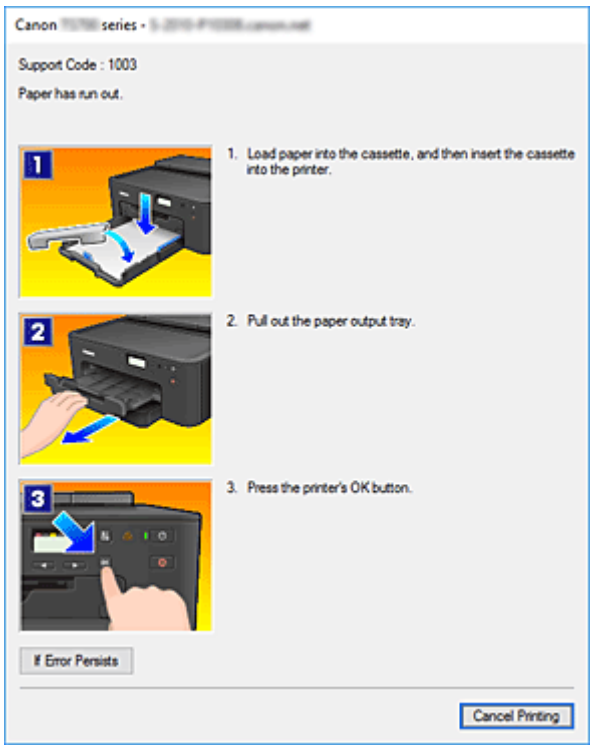

In such cases, take the appropriate action as described.

Checking Ink Status from Your Computer

You can check the remaining ink level and the ink tank types for your model.

1. Open the printer driver setup window

2. Launching the Canon IJ Status Monitor

   On the **Maintenance** tab, click **View Printer Status**.

3. Display **Estimated ink levels**

   Ink status is displayed as an illustration.

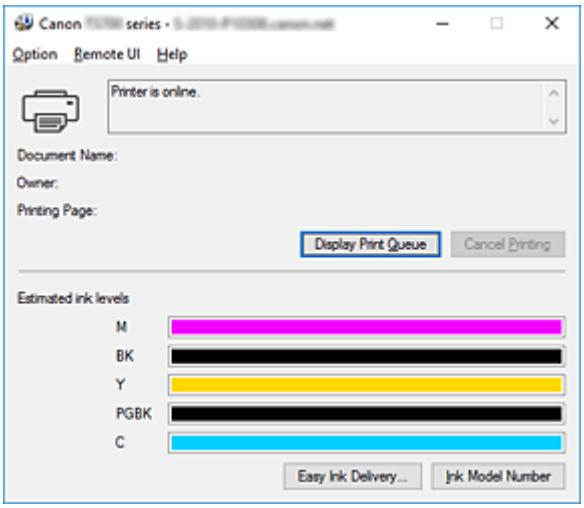

Note

- The information displayed on the Canon IJ Status Monitor may differ depending on the country or region where you are using your printer.

Instructions for Use (Printer Driver)

This printer driver is subject to the following restrictions. Keep the following points in mind when using the printer driver.

Restrictions on the Printer Driver

- Depending on the document type to be printed, the paper feed method specified in the printer driver may not operate correctly.
  If this happens, open the printer driver setup window from the **Print** dialog box of the application software, and check the setting in the **Paper Source** field on the **Main** tab.
- With some applications, the **Copies** setting in the **Page Setup** tab of the printer driver may not be enabled.
  In this case, use the copies setting in the **Print** dialog box of the application software.
- If the selected **Language** in the **About** dialog box of the **Maintenance** tab does not match the operating system interface language, the printer driver setup window may not be displayed properly.
- Do not change the **Advanced** tab items of the printer properties. If you change any of the items, you will not be able to use the following functions correctly.
  Also, if **Print to file** is selected in the **Print** dialog box of the application software and with applications that prohibit EMF spooling, such as Adobe Photoshop LE and MS Photo Editor, the following functions will not operate.
  - **Preview before printing** on the **Main** tab
  - **Prevention of Print Data Loss** in the **Print Options** dialog box on the **Page Setup** tab
  - **Page Layout**, **Tiling/Poster**, **Booklet**, **Duplex Printing**, **Specify Margin...**, **Print from Last Page**, **Collate**, and **Stamp/Background...** on the **Page Setup** tab
- Since the resolution in the preview display differs from the printing resolution, text and lines in the preview display may appear different from the actual print result.
- With some applications, the printing is divided into multiple print jobs.
  To cancel printing, delete all divided print jobs.
- If image data is not printed correctly, display the **Print Options** dialog box from the **Page Setup** tab and change the setting of **Disable ICM required from the application software**. This may solve the problem.

Points to Note About Applications with Restrictions

- There are following restrictions in Microsoft Word (Microsoft Corporation).
  - When Microsoft Word has the same printing functions as the printer driver, use Word to specify them.
  - When **Fit-to-Page**, **Scaled**, or **Page Layout** is used for **Page Layout** on the **Page Setup** tab of the printer driver, the document may not print normally in certain versions of Word.
  - When **Page Size** in Word is set to "XXX Enlarge/Reduce", the document may not print normally in certain versions of Word.
    If this happens, follow the procedure below.
    1. Open Word's **Print** dialog box.
    2. Open the printer driver setup window, and on the **Page Setup** tab, set **Page Size** to the same paper size that you specified in Word.

3. Set the **Page Layout** that you want, and then click **OK** to close the window.
4. Without starting printing, close the **Print** dialog box.
5. Open Word's **Print** dialog box again.
6. Open the printer driver setup window and click **OK**.
7. Start printing.

- If bitmap printing is enabled in Adobe Illustrator (Adobe Systems Incorporated), printing may take time or some data may not be printed. Print after unchecking the **Bitmap Printing** check box in the **Print** dialog box.

Printer Driver Description

- Quick Setup Tab Description
- Main Tab Description
- Page Setup Tab Description
- Maintenance Tab Description
- Canon IJ Status Monitor Description

Quick Setup Tab Description

The **Quick Setup** tab is for registering commonly used print settings. When you select a registered setting, the printer automatically switches to the preset items.

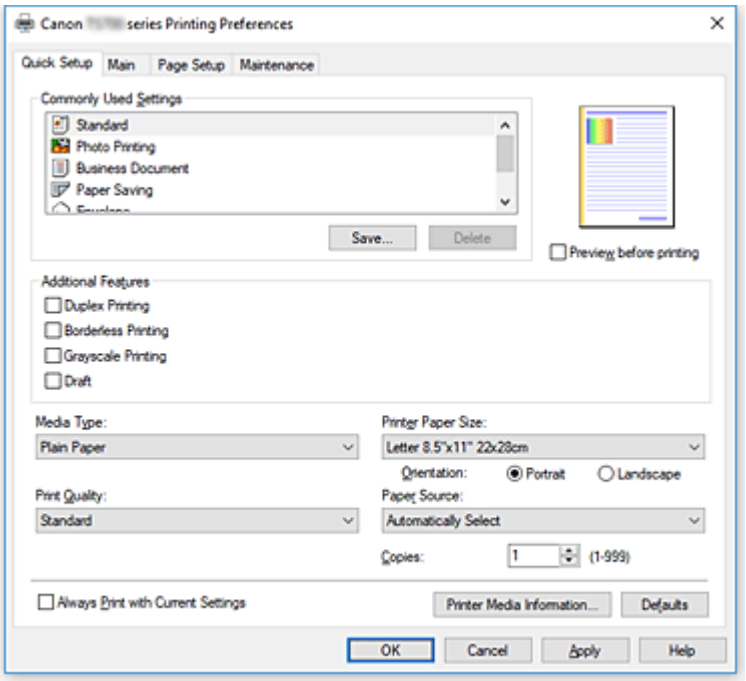

Commonly Used Settings

The names and icons of frequently used printing profiles are registered. When you select a printing profile according to the purpose of the document, settings that match the purpose are applied.
In addition, functions that are thought to be useful for the selected printing profile are displayed in **Additional Features**.
You can also change a printing profile and register it under a new name. You can delete the registered printing profile.
You can rearrange the profiles either by dragging the individual profiles or by holding down the Ctrl key and pressing the up or down arrow keys.

Standard

These are the factory settings.
If **Page Size**, **Orientation**, and **Copies** were set from the application software, those settings have priority.

Photo Printing

If you select this setting when printing a photo, the photo paper and photo size generally used are set. The **Borderless Printing** check box is checked automatically.
If **Orientation** and **Copies** were set from the application software, those settings have priority.

Business Document

Select this setting when printing a general document.
If **Page Size**, **Orientation**, and **Copies** were set from the application software, those settings have priority.

Paper Saving

Select this setting to save paper when printing a general document. The **2-on-1 Printing** and **Duplex Printing** check boxes are checked automatically.

If **Page Size**, **Orientation**, and **Copies** were set from the application software, those settings have priority.

Envelope

If you select this setting for printing an envelope, **Media Type** is set automatically to **Envelope**. In the **Envelope Size Setting** dialog box, select the size of the envelope to be used.

Greeting Card

When selected for printing a greeting card, the **Media Type** is automatically set to **Inkjet Greeting Card**. The **Print Quality** is also set to **High**, and a check-mark is added to **Borderless Printing**.

Note

- The combination of the **Additional Features** that was displayed for the printing profile that had been selected when the added printing profile was saved is also displayed when that added printing profile is selected.

Save...

Displays the **Save Commonly Used Settings** dialog box.

Click this button when you want to save the information that you set on the **Quick Setup**, **Main**, and **Page Setup** tabs to **Commonly Used Settings**.

Delete

Deletes a registered printing profile.

Select the name of the setting to be deleted from **Commonly Used Settings**, and click **Delete**. When a confirmation message is displayed, click **OK** to delete the specified printing profile.

Note

- Printing profiles that are registered in the initial settings cannot be deleted.

Settings Preview

The paper illustration shows how the original will be laid out on a sheet of paper.

You can check an overall image of the layout.

Preview before printing

Shows what the print result will look like before you actually print the data.

Check this check box to display a preview before printing.

Uncheck this check box if you do not want to display a preview.

Additional Features

Displays the frequently used, convenient functions for the printing profile that you selected for **Commonly Used Settings** on the **Quick Setup** tab.

When you move the mouse pointer near a function that can be changed, a description of that function is displayed.

To enable a function, check the corresponding check box.

For some functions, you can set detailed settings from the **Main** and **Page Setup** tabs.

Important

- Depending on the printing profiles, certain function may be grayed out and you will not be able to change them.

2-on-1 Printing

Prints two pages of the document, side by side, on one sheet of paper.

To change the page sequence, click the **Page Setup** tab, select **Page Layout** for **Page Layout**, and click **Specify...**. Then in the **Page Layout Printing** dialog box that appears, specify the **Page Order**.

4-on-1 Printing

Prints four pages of the document, side by side, on one sheet of paper.

To change the page sequence, click the **Page Setup** tab, select **Page Layout** for **Page Layout**, and click **Specify...**. Then in the **Page Layout Printing** dialog box that appears, specify the **Page Order**.

Duplex Printing

Selects whether to print the document on both sides or one side of a sheet of paper.

To change the staple side or the margins, set the new values from the **Page Setup** tab.

Borderless Printing

Performs borderless printing without any margins on the paper.

With the borderless printing function, the document to be printed is enlarged, so that it extends slightly off the paper. In other words, the document is printed without any margin.

To adjust the amount that the document extends beyond the paper, click the **Page Setup** tab, choose **Borderless**, and enter the value in **Amount of Extension**.

Grayscale Printing

This function converts the data to monochrome data when printing your document.

Draft

This setting is appropriate for test printing.

Rotate 180 degrees

Prints the document by rotating it 180 degrees against the paper feed direction.

The width of print area and the amount of extension that are configured in other application software will be reversed vertically and horizontally.

Color/Intensity Manual Adjustment

Select when you set the **Color Correction** method and individual settings such as **Cyan**, **Magenta**, **Yellow**, **Brightness**, **Contrast**, etc.

Media Type

Selects a type of printing paper.

Select a media type that matches the paper that is loaded in the printer. This ensures that printing is carried out properly for the specified paper.

Printer Paper Size

Selects the size of paper actually loaded into the printer.

Normally, the paper size is set automatically according to the output paper size setting, and the document is printed with no scaling.

When you set **2-on-1 Printing** or **4-on-1 Printing** in **Additional Features**, you can manually set the paper size with **Page Size** on the **Page Setup** tab.

If you select a paper size that is smaller than the **Page Size**, the document size will be reduced. If you select a paper size that is larger, the document size will be enlarged.

Also if you select **Custom...**, the **Custom Paper Size** dialog box opens and allows you to specify any vertical and horizontal dimensions for the paper size.

Orientation

Selects the printing orientation.

If the application used to create your document has a similar function, select the same orientation that you selected in that application.

Portrait

Prints the document so that its top and bottom positions are unchanged relative to the paper feed direction. This is the default setting.

Landscape

Prints the document by rotating it 90 degrees relative to the paper feed direction.

You can change the rotation direction by going to the Canon IJ Printer Assistant Tool, opening the **Custom Settings** dialog box, and then using **Rotate 90 degrees left when orientation is [Landscape]** check box.

To rotate the document 90 degrees to the left when printing, select the **Rotate 90 degrees left when orientation is [Landscape]** check box.

Print Quality

Selects your desired printing quality.

Select one of the following to set the print quality level that is appropriate for the purpose.

To set the print quality level individually, click the **Main** tab, and for **Print Quality**, select **Custom**. The **Set...** becomes enabled. Click **Set...** to open the **Custom** dialog box, and then specify the desired settings.

High

Gives priority to print quality over printing speed.

Standard

Prints with average speed and quality.

Draft

This setting is appropriate for test printing.

Paper Source

Select the source from which paper is supplied.

Automatically Select

Based on the paper settings in the printer driver and the paper information registered on the printer, the printer automatically determines the paper source and feeds paper.

Rear Tray

Paper is always supplied from the rear tray.

Cassette

Paper is always supplied from the cassette.

Important

- Depending on the media type and size, the **Paper Source** settings that can be selected may differ.

Copies

Specifies the number of copies you want to print. You can specify a value from 1 to 999.

Important

- When the application software that you used to create the document has the same function, specify the settings on the printer driver. However, if the print results are not acceptable, specify the function settings on the application software.

Always Print with Current Settings

Prints documents with the current settings starting from the next print execution.

When you select this function and then close the printer driver setup window, the information that you set on the **Quick Setup**, **Main**, and **Page Setup** tabs are saved and printing with the same settings is possible starting from the next print execution.

Important

- If you log on with a different user name, the settings that were set when this function was enabled are not reflected in the print settings.
- If a setting was specified on the application software, it has priority.

Printer Media Information...

Displays **Printer Media Information** dialog box.

You can check the printer settings and apply the checked settings to the printer driver.

Defaults

Restores all the settings you have changed to their default values.

Click this button to return all settings on the **Quick Setup**, **Main**, and **Page Setup** tabs to their default values (factory settings).

Save Commonly Used Settings dialog box

This dialog box allows you to save the information that you set on the **Quick Setup**, **Main**, and **Page Setup** tabs and add the information to the **Commonly Used Settings** list on the **Quick Setup** tab.

Name

Enter the name for the printing profile you wish to save.

Up to 255 characters can be entered.

The name appears, with its associated icon, in the **Commonly Used Settings** list on the **Quick Setup** tab.

Options...

Opens the **Save Commonly Used Settings** dialog box.

Changes the details of printing profile to be saved.

Save Commonly Used Settings dialog box

Select the icons of the printing profiles to be registered to **Commonly Used Settings**, and change the items to be saved in the printing profiles.

Icon

Select the icon for the printing profile you wish to save.

The selected icon appears, with its name, in the **Commonly Used Settings** list on the **Quick Setup** tab.

Save the paper size setting

Saves the paper size to the printing profile in **Commonly Used Settings**.

To apply the saved paper size when the printing profile is selected, check this check box.

If this check box is unchecked, the paper size is not saved, and consequently the paper size setting is not applied when the printing profile is selected. Instead the printer prints with the paper size specified with the application software.

Save the orientation setting

Saves the **Orientation** to the printing profile in **Commonly Used Settings**.
To apply the saved print orientation when the printing profile is selected, check this check box.
If this check box is unchecked, the print orientation is not saved, and consequently the **Orientation** setting is not applied when the printing profile is selected. Instead the printer prints with the print orientation specified with the application software.

Save the copies setting

Saves the **Copies** setting to the printing profile in **Commonly Used Settings**.
To apply the saved copies setting when the printing profile is selected, check this check box.
If this check box is unchecked, the copies setting is not saved, and consequently the **Copies** setting is not applied when the printing profile is selected. Instead the printer prints with the copies setting specified with the application software.

Custom Paper Size dialog box

This dialog box allows you to specify the size (width and height) of the custom paper.

Units

Select the unit for entering a user-defined paper size.

Paper Size

Specifies the **Width** and the **Height** of the custom paper. Measurement is shown according to the units specified in **Units**.

Printer Media Information dialog box

This dialog box allows you to check the printer settings and apply the checked settings to the printer driver.

Paper Source

Check the setting or select a new paper source.

Media Type

Displays the **Media Type** that is currently set on the printer.
To apply the displayed setting to the printer driver, click **Set**.

Page Size

Displays the **Page Size** that is currently set on the printer.
To apply the displayed setting to the printer driver, click **Set**.

Related Topics

- Basic Printing Setup
- Setting a Page Size and Orientation
- Setting the Number of Copies and Printing Order
- Execute Borderless Printing
- Duplex Printing
- Setting Up Envelope Printing
- Printing on Postcards

- Switching the Paper Source to Match the Purpose
- Displaying the Print Results Before Printing
- Setting Paper Dimensions (Custom Size)
- Printing a Color Document in Monochrome
- Specifying Color Correction
- Adjusting Color Balance
- Adjusting Brightness
- Adjusting Contrast
- Registering a Frequently Used Printing Profile

Main Tab Description

The **Main** tab allows you to create a basic print setup in accordance with the media type. Unless special printing is required, normal printing can be performed just by setting the items on this tab.

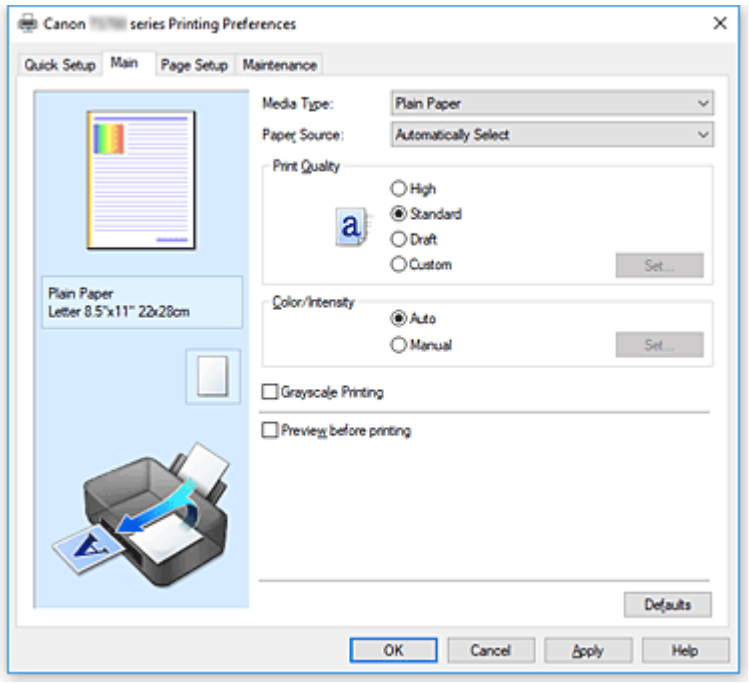

Settings Preview

The paper illustration shows how the original will be laid out on a sheet of paper.
You can check an overall image of the layout.
The printer illustration shows how to load paper to match the printer driver settings.
Check whether the printer is set up correctly by looking at the illustration before you start printing.

Media Type

Selects a type of printing paper.
Select a media type that matches the paper that is loaded in the printer. This ensures that printing is carried out properly for the specified paper.

Paper Source

Shows the source from which paper is supplied.
You may be able to switch the paper source with the printer driver.

Automatically Select

Based on the paper settings in the printer driver and the paper information registered on the printer, the printer automatically determines the paper source and feeds paper.

Rear Tray

Paper is always supplied from the rear tray.

Cassette

Paper is always supplied from the cassette.

Important

- Depending on the media type and size, the **Paper Source** settings that can be selected may differ.

Print Quality

Selects your desired printing quality.

Select one of the following to set the print quality level that is appropriate for the purpose.

Important

- Depending on the **Media Type** settings, the same print results may be produced even if the **Print Quality** is changed.

High

Gives priority to print quality over printing speed.

Standard

Prints with average speed and quality.

Draft

This setting is appropriate for test printing.

Custom

Select this when you want to set the printing quality level individually.

Set...

Select **Custom** for **Print Quality** to enable this button.

Open the **Custom** dialog box. You can then individually set the print quality level.

Color/Intensity

Selects color adjustment method.

Auto

Cyan, **Magenta**, **Yellow**, **Brightness**, **Contrast**, and so on are adjusted automatically.

Manual

Select when you set the individual settings such as **Cyan**, **Magenta**, **Yellow**, **Brightness**, **Contrast**, etc. and **Color Correction** method.

Set...

Select **Manual** for **Color/Intensity** to enable this button.

In the **Manual Color Adjustment** dialog box, you can adjust individual color settings such as **Cyan**, **Magenta**, **Yellow**, **Brightness**, and **Contrast** on the **Color Adjustment** tab, and select the **Color Correction** method on the **Matching** tab.

Note

- If you want to use an ICC profile to adjust colors, use the **Manual Color Adjustment** dialog box to set the profile.

Grayscale Printing

This function converts the data to monochrome data when printing your document.

Check this check box to print a color document in monochrome.

Preview before printing

Shows what the print result will look like before you actually print the data.

Check this check box to display a preview before printing.

Defaults

Restores all the settings you have changed to their default values.

Clicking this button restores all the settings on the current screen to their default values (factory settings).

Custom dialog box

Set the quality level, and select the desired print quality.

Quality

You can use the slider bar to adjust the print quality level.

Important

- Certain print quality levels cannot be selected depending on the settings of **Media Type**.

Note

- The **High**, **Standard**, or **Draft** print quality modes are linked with the slider bar. Therefore when the slider bar is moved, the corresponding quality and value are displayed on the left. This is the same as when the corresponding radio button is selected for **Print Quality** on the **Main** tab.

Color Adjustment Tab

This tab allows you to adjust the color balance by changing the settings of the **Cyan**, **Magenta**, **Yellow**, **Brightness**, and **Contrast** options.

Preview

Shows the effect of color adjustment.
The color and brightness change when each item is adjusted.

Note

- The graphic is in monochrome when the **Grayscale Printing** check box is checked.

View Color Pattern

Displays a pattern for checking color changes produced by color adjustment.
If you want to display the preview image with a color pattern, check this check box.

Cyan / Magenta / Yellow

Adjusts the strengths of **Cyan**, **Magenta**, and **Yellow**.
Moving the slider to the right makes a color stronger, and moving the slider to the left makes a color weaker.
You can also directly enter a value linked to the slider. Enter a value in the range from -50 to 50.
This adjustment changes the relative amount of ink of each color used, which alters the total color balance of the document. Use your application if you want to change the total color balance significantly. Use the printer driver only if you want to adjust the color balance slightly.

Important

- When **Grayscale Printing** is checked on the **Main** tab, **Cyan**, **Magenta**, and **Yellow** appear grayed out and are unavailable.

Brightness

Adjusts the brightness of your print. You cannot change the levels of pure white and black. However, the brightness of the colors between white and black can be changed. Moving the slider to the right brightens (dilutes) the colors, and moving the slider to the left darkens (intensifies) the colors. You can also directly enter brightness values that are linked to the slider bar. Enter a value in the range from -50 to 50.

Contrast

Adjusts the contrast between light and dark in the image to be printed.
Moving the slider to the right increases the contrast, moving the slider to the left decreases the contrast.
You can also directly enter a value linked to the slider. Enter a value in the range from -50 to 50.

Matching Tab

Allows you to select the method for adjusting colors to match the type of document to be printed.

Color Correction

Allows you to select **Driver Matching**, **ICM**, or **None** to match the purpose of the print operation.

Important

- When **Grayscale Printing** is checked on the **Main** tab, **Color Correction** appears grayed out and is unavailable.

Driver Matching

With Canon Digital Photo Color, you can print sRGB data with color tints that most people prefer.

ICM

Adjusts the colors by using an ICC profile when printing.

Important

- If the application software is set so that ICM is disabled, **ICM** is unavailable for **Color Correction** and the printer may not be able to print the image data properly.

None

Disables color adjustment with the printer driver.

Related Topics

- Setting the Print Quality Level (Custom)
- Adjusting Color Balance
- Adjusting Brightness
- Adjusting Contrast
- Specifying Color Correction
- Adjusting Colors with the Printer Driver
- Printing with ICC Profiles
- Printing a Color Document in Monochrome
- Displaying the Print Results Before Printing

Page Setup Tab Description

The **Page Setup** tab allows you to determine how a document is to be arranged on the paper. Also, this tab allows you to set the number of copies and the order of printing. If the application which created the document has a similar function, set them with the application.

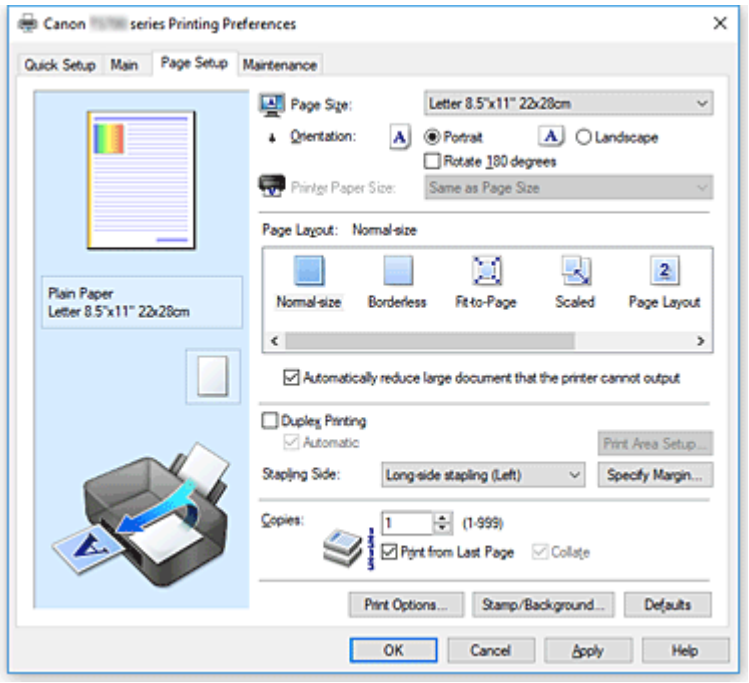

Settings Preview

The paper illustration shows how the original will be laid out on a sheet of paper.

You can check an overall image of the layout.

The printer illustration shows how to load paper to match the printer driver settings.

Check whether the printer is set up correctly by looking at the illustration before you start printing.

Page Size

Selects a page size.

Ensure that you select the same page size as you selected within the application.

If you select **Custom...**, the **Custom Paper Size** dialog box opens and allows you to specify any vertical and horizontal dimensions for the paper size.

Orientation

Selects the printing orientation.

If the application used to create your document has a similar function, select the same orientation that you selected in that application.

Portrait

Prints the document so that its top and bottom positions are unchanged relative to the paper feed direction. This is the default setting.

Landscape

Prints the document by rotating it 90 degrees relative to the paper feed direction.

You can change the rotation direction by going to the Canon IJ Printer Assistant Tool, opening the **Custom Settings** dialog box, and then using **Rotate 90 degrees left when orientation is [Landscape]** check box.

To rotate the document 90 degrees to the left when printing, select the **Rotate 90 degrees left when orientation is [Landscape]** check box.

Rotate 180 degrees

Prints the document by rotating it 180 degrees against the paper feed direction.

The width of print area and the amount of extension that are configured in other application software will be reversed vertically and horizontally.

Printer Paper Size

Selects the size of paper actually loaded into the printer.

The default setting is **Same as Page Size** to perform normal-sized printing.

You can select a printer paper size when you select **Fit-to-Page**, **Scaled**, **Page Layout**, **Tiling/Poster**, or **Booklet** for **Page Layout**.

If you select a paper size that is smaller than the **Page Size**, the document size will be reduced. If you select a paper size that is larger, the document size will be enlarged.

Also if you select **Custom...**, the **Custom Paper Size** dialog box opens and allows you to specify any vertical and horizontal dimensions for the paper size.

Page Layout

Selects the size of the document you want to print and the type of printing.

Normal-size

This is the normal printing method. Select this when you do not specify any page layout.

Automatically reduce large document that the printer cannot output

If the printer cannot print the paper size of a document, the printer can automatically reduce the size when it prints the document.

Check this check box to reduce the size when printing the document.

Borderless

Chooses whether you are printing on a full page without any page margins or printing with page margins.

In borderless printing, originals are enlarged to extend slightly off the paper. Thus, printing can be performed without any margins (border).

Use **Amount of Extension** to adjust how much of the document extends off the paper during borderless printing.

Amount of Extension

Adjusts how much of the document extends off the paper during borderless printing.

Moving the slider to the right increases the amount of extension and allows you to perform borderless printing with no problems.

Moving the slider to the left reduces the amount of extension and expands the range of the document to print.

Fit-to-Page

This function enables you to automatically enlarge or reduce documents to fit to the paper size loaded in the printer without changing the paper size you specified in your application software.

Scaled

Documents can be enlarged or reduced to be printed.

Specify the size in **Printer Paper Size**, or enter the scaling ratio in the **Scaling** box.

Scaling

Specifies an enlargement or reduction ratio for the document you want to print.

Page Layout

Multiple pages of document can be printed on one sheet of paper.

Specify...

Opens the **Page Layout Printing** dialog box.

Click this button to set details on page layout printing.

Tiling/Poster

This function enables you to enlarge the image data and divide the enlarged data into several pages to be printed. You can also glue together these sheets of paper to create large printed matter, such as a poster.

Specify...

Opens the **Tiling/Poster Printing** dialog box.

Click this button to set details on tiling/poster printing.

Booklet

The booklet printing function allows you to print data for a booklet. Data is printed on both sides of the paper. This type of printing ensures that pages can be collated properly, in page number order, when the printed sheets are folded and stapled at the center.

Specify...

Opens the **Booklet Printing** dialog box.

Click this button to set details on booklet printing.

Duplex Printing

Selects whether to print the document automatically on both sides or one side of a sheet of paper.

Check this check box to print the document on both sides.

This function can be used only when **Plain Paper**, **Ink Jet Hagaki (A)**, **Hagaki K (A)**, **Hagaki (A)**, or **Hagaki** is selected for **Media Type** and one of **Normal-size**, **Fit-to-Page**, **Scaled**, or **Page Layout** is selected.

Automatic

Selects whether duplex printing is to be performed automatically or manually.

This check box will be enabled if **Booklet** is selected from the **Page Layout** list or the **Duplex Printing** check box is checked.

To perform duplex printing automatically, check this check box.

To perform duplex printing manually, uncheck this check box.

Print Area Setup...

Opens the **Print Area Setup** dialog box in which you can configure the print area for automatic duplex printing.

This button will be enabled if automatic duplex printing is set when **Borderless** is not selected.

Stapling Side

Selects the stapling margin position.

The printer analyzes the **Orientation** and **Page Layout** settings, and automatically selects the best stapling margin position. Check **Stapling Side**, and select from the list to change it.

Specify Margin...

Opens the **Specify Margin** dialog box.

You can specify the width of the margin.

Copies

Specifies the number of copies you want to print. You can specify a value from 1 to 999.

Important

- If the application used to create your document has a similar function, specify the number of copies with the application without specifying it here.

Print from Last Page

Check this check box when you want to print from the last page in order. If you do this, you do not need to sort the pages into their correct order after printing.
Uncheck this check box to print your document in normal order, starting from the first page.

Collate

Check this check box to group together the pages of each copy when you want to print multiple copies.
Uncheck this check box when you want to print with all pages of the same page number grouped together.

Important

- When the application software that you used to create the document has the same function, give priority to the printer driver settings. However, if the print results are not acceptable, specify the function settings on the application software. When you specify the number of copies and the printing order with both the application and this printer driver, the number of copies may be multiplied numbers of the two settings or the specified printing order may not be enabled.

Print Options...

Opens the **Print Options** dialog box.
Changes detailed printer driver settings for print data that is sent from applications.

Stamp/Background...

Opens the **Stamp/Background** dialog box.
The **Stamp** function allows you to print a stamp text or a bitmap over or behind document data. It also allows you to print date, time and user name. The **Background** function allows you to print a light illustration behind the document data.
Depending on the environment, **Stamp** and **Background** may not be available.

Custom Paper Size dialog box

This dialog box allows you to specify the size (width and height) of the custom paper.

Units

Select the unit for entering a user-defined paper size.

Paper Size

Specifies the **Width** and the **Height** of the custom paper. Measurement is shown according to the units specified in **Units**.

Page Layout Printing dialog box

This dialog box allows you to select the number of document pages to be placed on one sheet of paper, the page order, and whether a page border line is to be printed around each document page.
The settings specified in this dialog box can be confirmed in the settings preview on the printer driver.

Preview Icon

Shows the settings made on the **Page Layout Printing** dialog box.
You can check what the print result will look like before you actually print the data.

Page Layout

Specifies the number of document pages to fit on one sheet.

Page Order

Specifies the document orientation to be printed on a sheet of paper.

Page Border

Prints a page border line around each document page.
Check this check box to print the page border line.

Tiling/Poster Printing dialog box

This dialog box allows you to select the size of the image to be printed. You can also make settings for cut lines and paste markers which are convenient for pasting together the pages into a poster.
The settings specified in this dialog box can be confirmed in the settings preview on the printer driver.

Preview Icon

Shows the settings of the **Tiling/Poster Printing** dialog box.
You can check what the print result will look like.

Image Divisions

Select the number of divisions (vertical x horizontal).
As the number of divisions increases, the number of sheets used for printing increases. If you are pasting pages together to create a poster, increasing the number of divisions allows you to create a larger poster.

Print "Cut/Paste" in margins

Specifies whether to print the words "Cut" and "Paste" in the margins. These words serve as guidelines for pasting together the pages into a poster.
Check this check box to print the words.

Note

- Depending on the type of printer driver you are using and the environment, this function may not be available.

Print "Cut/Paste" lines in margins

Specifies whether to print cut lines that serve as guidelines for pasting together the pages into a poster.
Check this check box to print the cut lines.

Print page range

Specifies the printing range. Select **All** under normal circumstances.
Select **Pages** to specify a specific page or range.

Note

- If some of the pages have not been printed well, specify the pages that do not need to be printed by clicking them in the settings preview of the **Page Setup** tab. Only the pages shown on the screen will be printed this time.

Booklet Printing dialog box

This dialog box allows you to set how to bind the document as a booklet. Printing only on one side and printing a page border, can also be set in this dialog box.
The settings specified in this dialog box can be confirmed in the settings preview on the printer driver.

Preview Icon

Shows the settings made on the **Booklet Printing** dialog box.
You can check what the document will look like when printed as a booklet.

Margin for stapling

Specifies which side of the booklet is to be stapled.

Insert blank page

Selects whether to print the document on one side or both sides of the booklet.
Check this check box to print the document on one side of the booklet and select the side to be left blank from the list.

Margin

Specifies the width of the stapling margin.
The specified width becomes the stapling margin from the center of the sheet.

Page Border

Prints a page border line around each document page.
Check this check box to print the page border line.

Print Area Setup dialog box

When you perform duplex printing, the print area of the document becomes slightly narrower than usual. Therefore when a document that has small margins is printed, the document may not fit on one page. This dialog box allows you to set whether the page is to be reduced when printed so that the document fits in one page.

Use normal-size printing

Prints the document pages without reducing them. This is the default setting.

Use reduced printing

Slightly reduces each document page so that it fits on one sheet of paper during printing.
Select this setting when using automatic duplex printing to print a document with small margins.

Specify Margin dialog box

This dialog box allows you to specify the margin width for the side to be stapled. If a document does not fit on one page, the document is reduced when printed.

Margin

Specifies the width of the stapling margin.
The width of the side specified by **Stapling Side** becomes the stapling margin.

Print Options dialog box

Makes changes to print data that is sent to the printer.

Depending on the environment, this function may not be available.

Disable ICM required from the application software

Disables the ICM function required from the application software.

When an application software uses Windows ICM to print data, unexpected colors may be produced or the printing speed may decrease. If these problems occur, checking this check box may resolve the problems.

Important

- Uncheck this check box under normal circumstances.
- This function does not work when **ICM** is selected for **Color Correction** on the **Matching** tab of the **Manual Color Adjustment** dialog box.

Disable the color profile setting of the application software

Checking this check box disables information in the color profile that was set on the application software.

When the information in the color profile set on the application software is output to the printer driver, the print result may contain unexpected colors. If this happens, checking this check box may resolve the problem.

Important

- Even when this check box is checked, only some of the information in the color profile is disabled, and the color profile can still be used for printing.
- Uncheck this check box under normal circumstances.

Disable the paper source setting of the application software

Disables the paper feeding method that is set by the application.

With some applications such as Microsoft Word, the data may be printed with a feeding method that differs from the printer driver setting. In this case, check this function.

Important

- When this function is enabled, normally the paper feeding method cannot be changed from the Canon IJ Preview.

Ungroup Papers

Sets the display method of **Media Type**, **Page Size**, and **Printer Paper Size**.

To display the items separately, select the check box.

To display the items as a group, clear the check box.

Do not allow application software to compress print data

Compression of the application software print data is prohibited.

If the print result has missing image data or unintended colors, selecting this check box may improve the condition.

Important

- Uncheck this check box under normal circumstances.

Print after creating print data by page

The print data is created in page units, and printing starts after the processing of one page of print data is complete.

If a printed document contains unintended results such as streaks, selecting this check box may improve the results.

Important

- Uncheck this check box under normal circumstances.

Prevention of Print Data Loss

You can reduce the size of the print data that was created with the application software and then print the data.

Depending on the application software being used, the image data may be cut off or may not be printed properly. In such cases, select **On**. If you will not be using this function, select **Off**.

Important

- When using this function, the print quality may drop depending on the print data.

Unit of Print Data Processing

Selects the processing unit of the print data to be sent to the printer.

Select **Recommended** under normal circumstances.

Important

- A large amount of memory may be used for certain settings.
  Do not change the setting if your computer has a small amount of memory.

Print With

Specify the ink tank to be used from the installed ink tanks.

Select from **All Colors (Default)**, **All Except PGBK (Black)**, **Only PGBK (Black)**.

Important

- When the following settings are specified, **Only PGBK (Black)** does not function because the printer uses an ink tank other than PGBK (Black) to print documents.
  - Other than **Plain Paper**, **Envelope**, **Ink Jet Hagaki (A)**, **Hagaki K (A)**, **Hagaki (A)**, or **Hagaki** is selected for **Media Type** on the **Main** tab
  - **Borderless** is selected from the **Page Layout** list on the **Page Setup** tab
- Do not detach the ink tank that is not in use. Printing cannot be performed while either ink tank is detached.

Stamp/Background dialog box

The **Stamp/Background** dialog box allows you to print a stamp and/or background over or behind the document pages. In addition to the pre-registered ones, you can register and use your original stamp or background.

Stamp

Stamp printing is a function that prints a stamp over a document.

Check this check box and select a title from the list to print a stamp.

Define Stamp...

Opens the **Stamp Settings** dialog box.

You can check the details of a selected stamp or save a new stamp.

Place stamp over text

Sets how the stamp is to be printed over the document.

Check the **Stamp** check box to enable this.

Check this check box to print a stamp over the printed document page. The printed data may be hidden behind the stamp.

Uncheck this check box to print the document data over the stamp. The printed data will not be hidden behind the stamp. However, the sections of the stamp that are overlapped by the document may be hidden.

Stamp first page only

Selects whether the stamp is to be printed on the first page only or on all pages when the document has two or more pages.

Check the **Stamp** check box to enable this.

Check this check box to print a stamp on the first page only.

Background

Background printing is a function that allows you to print an illustration or a similar object (bitmap) behind the document.

Check this check box to print a background and select a title from the list.

Select Background...

Opens the **Background Settings** dialog box.

You can register a bitmap as a background, and change layout method and intensity of the selected background.

Background first page only

Selects whether to print the background on the first page only or print on all pages when the document has two or more pages.

Check the **Background** check box to enable this.

Check this check box to print a background on the first page only.

Stamp Tab

The Stamp tab allows you to set the text and bitmap file (.bmp) to be used for a stamp.

Preview Window

Shows the status of the stamp configured in each tab.

Stamp Type

Specifies the stamp type.

Select **Text** to create a stamp with characters. Select **Bitmap** to create with a bitmap file. Select **Date/Time/User Name** to display the creation date/time and user name of the printed document.

The setting items in the **Stamp** tab change depending on the selected type.

When **Stamp Type** is **Text** or **Date/Time/User Name**

Stamp Text

Specifies the stamp text string.

Up to 64 characters can be entered.

For **Date/Time/User Name**, the creation date/time and user name of the printed object are displayed in **Stamp Text**.

Important

- **Stamp Text** appears grayed out and is unavailable if **Date/Time/User Name** is selected.

TrueType Font

Selects the font for the stamp text string.

Style

Selects the font style for the stamp text string.

Size

Selects the font size for the stamp text string.

Outline

Selects a frame that encloses the stamp text string.

If a large font size is selected for **Size**, characters may extend outside of the stamp border.

Color/Select Color...

Shows the current color for the stamp.

To select a different color, click **Select Color...** to open the **Color** dialog box, and select or create a color you wish to use as a stamp.

When **Stamp Type** is **Bitmap**

File

Specifies the name of the bitmap file to be used as the stamp.

Select File...

Opens the dialog box to open a file.

Click this button to select a bitmap file to be used as a stamp.

Size

Adjusts the size of the bitmap file to be used as a stamp.

Moving the slider to the right increases the size, moving the slider to the left decreases the size.

Transparent white area

Specifies whether to make white-filled areas of the bitmap transparent.

Check this check box to make white-filled areas of the bitmap transparent.

Note

- Click **Defaults** to set **Stamp Type** to text, **Stamp Text** to blank, **TrueType Font** to Arial, **Style** to Regular, **Size** to 36 points, **Outline** unchecked, and **Color** to gray with the RGB values (192, 192, 192).

Placement Tab

The Placement tab allows you to set the position where the stamp is to be printed.

Preview Window

Shows the status of the stamp configured in each tab.

Position

Specifies the stamp position on the page.

Selecting **Custom** from the list allows you to enter values for the **X-Position** and **Y-Position** coordinates directly.

Rotation

Specifies the angle of rotation for the stamp. The angle can be set by entering the number of degrees.

Negative values rotate the stamp clockwise.

Note

- **Rotation** is enabled only when **Text** or **Date/Time/User Name** is selected for **Stamp Type** on the **Stamp** tab.

Note

- Click **Defaults** to set the stamp position to **Center** and the rotation to 0.

Save settings Tab

The **Save settings** tab allows you to register a new stamp or delete an unnecessary stamp.

Title

Enter the title to save the stamp you created.

Up to 64 characters can be entered.

Note

- Spaces, tabs, and returns cannot be entered at the beginning or end of a title.

Stamps

Shows a list of saved stamp titles.

Specify a title to display the corresponding stamp in **Title**.

Save/Save overwrite

Saves the stamp.

Enter a title in **Title**, and then click this button.

Delete

Deletes an unnecessary stamp.

Specify the title of an unnecessary stamp from the **Stamps** list, and click this button.

Background Tab

The Background tab allows you to select a bitmap file (.bmp) to be used as a background or determine how to print the selected background.

Preview Window

Shows the status of the bitmap set on the **Background** tab.

File

Specifies the name of the bitmap file to be used as the background.

Select File...

Opens the dialog box to open a file.

Click this button to select a bitmap file (.bmp) to be used as the background.

Layout Method

Specifies how the background image is to be placed on the paper.

When **Custom** is selected, you can set coordinates for **X-Position** and **Y-Position**.

Intensity

Adjusts the intensity of the bitmap to be used as a background.

Moving the slider to the right increases the intensity, and moving the slider to the left decreases the intensity. To print the background at the original bitmap intensity, move the slider to the rightmost position.

Note

- Depending on the environment, this function may not be available.
- Click **Defaults** to set **File** to blank, **Layout Method** to **Fill page**, and the **Intensity** slider to the middle.

Save settings Tab

The **Save settings** tab allows you to register a new background or delete an unnecessary background.

Title

Enter the title to save the background image you specified.

Up to 64 characters can be entered.

Note

- Spaces, tabs, and returns cannot be entered at the beginning or end of a title.

Backgrounds

Shows a list of registered background titles.

Specify a title to display the corresponding background in **Title**.

Save/Save overwrite

Saves the image data as a background.

After inserting the **Title**, click this button.

Delete

Deletes an unnecessary background.

Specify the title of an unnecessary background from the **Backgrounds** list, and then click this button.

Maintenance Tab Description

The **Maintenance** tab allows you to start the Canon IJ Printer Assistant Tool or check the status of the printer.

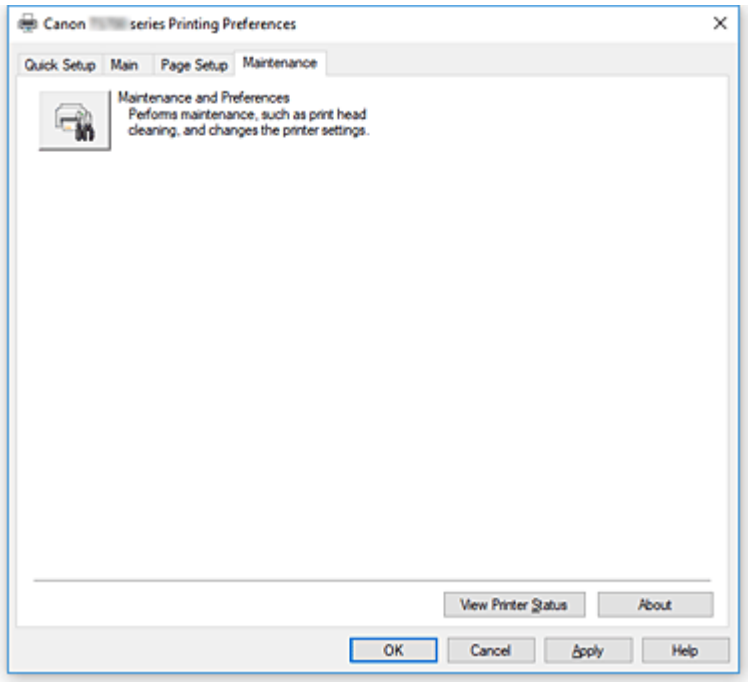

Maintenance and Preferences

Canon IJ Printer Assistant Tool is started.

You can perform printer maintenance or change the settings of the printer.

View Printer Status

Starts the Canon IJ Status Monitor.

Perform this function when you want to check the printer status and how a print job is proceeding.

About

Opens the **About** dialog box.

The version of the printer driver, plus a copyright notice, can be checked.

In addition, the language to be used can be switched.

About dialog box

When you click **About**, the **About** dialog box is displayed.

This dialog box displays the version, copyright, and module list of the printer driver. You can select the language to be used and switch the language displayed in the setup window.

Modules

Lists the printer driver modules.

Language

Specifies the language you wish to use in the printer driver setup window.

Important

- If the font for displaying the language of your choice is not installed in your system, the characters will be garbled.

Canon IJ Status Monitor Description

The Canon IJ Status Monitor displays the printer status and the printing progress. The printer status is shown by the images, icons, and messages in the status monitor.

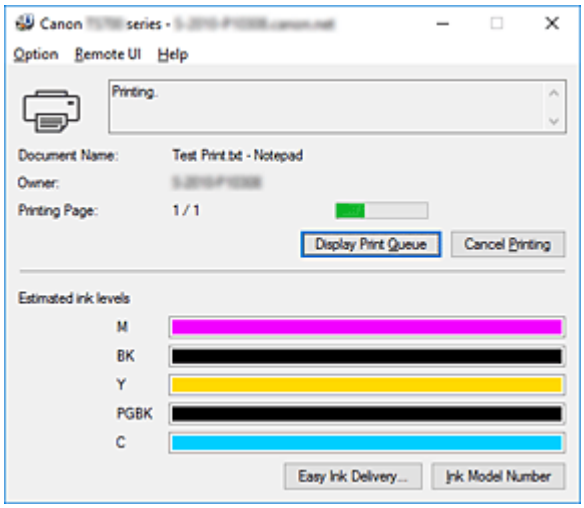

Features of the Canon IJ Status Monitor

The Canon IJ Status Monitor has the following functions:

Onscreen display of printer status

The status monitor displays the printer status in real-time.
You can check the progress of each document to be printed (print job).

Display of error content and correction procedure

The status monitor displays information on any errors that occur on the printer.
You can then immediately check what sort of action to perform.

Ink status display

The status monitor displays ink tank types and estimated ink levels.
When the remaining ink level becomes low, a warning icon and message (low ink level warning) are displayed.

Overview of the Canon IJ Status Monitor

The Canon IJ Status Monitor uses images and messages to display the printer status and the ink status. During printing, you can check information about the document being printed and the print progress.
If an error occurs, the status monitor displays the error content and instructions on how to correct the error. Follow the message instructions.

Printer

Canon IJ Status Monitor shows an icon when a warning or error occurs to the printer.

: There is a warning.

: There has been an operator error.

: There is a notice about something other than a warning or an error.

: There has been an error which requires a service.

Ink Tank

If a low ink warning or an empty ink tank error occurs, the status monitor displays an icon. The status monitor also uses images to display the estimated ink levels of the ink tanks.

Move the cursor onto the image to check detailed information such as the remaining ink levels and the names of ink tanks that the printer can use.

Document Name

Name of the document being printed.

Owner

Owner's name of the document being printed.

Printing Page

Page number of current page and the total page count.

Display Print Queue

The print queue, which controls the current document and documents waiting to be printed.

Cancel Printing

Cancels printing.

Estimated ink levels

Displays icons to report a remaining ink level warning and an ink depletion error.

The estimated ink level of the ink tank is also displayed as an illustration.

Ink Model Number

You can look up the correct ink tank for your printer.

Option Menu

If a printer message appears, select **Enable Status Monitor** to start the Canon IJ Status Monitor.

Select **Enable Status Monitor** to use the following commands:

Always Display Current Job

Displays the Canon IJ Status Monitor whenever a document is being printed.

Always Display on Top

Displays the Canon IJ Status Monitor in front of other windows.

Display Guide Message

Displays guide messages for complicated paper setting operations.

Envelope Printing

Displays a guide message when envelope printing starts.

To hide this guide message, select the **Do not show this message again** check box.

To display the guide message again, open the **Option** menu, select **Display Guide Message**, click **Envelope Printing**, and enable this setting.

Hagaki Printing

Displays a guide message before the printer begins hagaki printing.

To display this guide message, open the **Option** menu, select **Display Guide Message**, click **Hagaki Printing**, and enable this setting.

To hide the guide message, select the **Do not show this message again** check box.

Display Warning Automatically

When a Low Ink Warning Occurs

Starts the Canon IJ Status Monitor window automatically and displays it in front of the other windows when a low ink warning occurs.

Start when Windows is Started

Automatically starts the Canon IJ Status Monitor when Windows is started.

Remote UI menu

You are able to open the printer's Remote User Interface.
You are able to check the printer status and run maintenance functions on the printer when connected to and using it through a network.

Note

- When the printer is being used via USB connection **Remote UI** will not display.

Printer Information

Allows you check detailed information, such as the printer status, the print progress, and remaining ink levels.

Maintenance

Allows you to run printer maintenance and change printer settings.

Download Security Certificate

Displays the **For secure communication** window.
This window allows you to download the route certificate, register it to the browser, and disable warning displays.

Help Menu

Select this menu to display Help information for the Canon IJ Status Monitor including version and copyright information.

Installing the Printer Driver

You can access our web site through the Internet and download the latest printer driver for your model.

1. Turn off the printer

2. Start the installer

   Double-click the icon of the downloaded file.
   The installation program starts.

   Important

   - A confirmation/warning dialog box may appear when starting, installing or uninstalling software. This dialog box appears when administrative rights are required to perform a task.
     When you are logged on to an administrator account, click **Yes** (or **Continue**, **Allow**) to continue.
     Some applications require an administrator account to continue. In such cases, switch to an administrator account, and restart the operation from the beginning.

3. Install the printer driver

   Take the appropriate action as described on the screen.

4. Complete the installation

   Click **Complete**.

Depending on the environment you are using, a message prompting you to restart the computer may be displayed. To complete the installation properly, restart the computer.

Important

- You can download the printer driver for free, but any Internet access charges incurred are your responsibility.
- Before installing the latest printer driver, delete the previously installed version.

Related Topics

- Obtaining the Latest Printer Driver
- Deleting the Unnecessary Printer Driver
- Before Installing the Printer Driver

Printing Using Canon Application Software

- **Easy-PhotoPrint Editor Guide**

Printing from Smartphone/Tablet

- Printing from iPhone/iPad/iPod touch (iOS)
- Printing from Smartphone/Tablet (Android)
- Printing from Windows 10 Mobile Device
- Printing with Wireless Direct

Printing with Wireless Direct

You can connect devices (e.g. computer, smartphone, or tablet) to the printer by two methods below.

- Wireless connection (connecting devices via a wireless router)
- Direct wireless connection (connecting devices using Wireless Direct)

This section describes Wireless Direct, which allows you to print by connecting the devices to the printer directly.

Follow the procedure below to use Wireless Direct.

1. Preparing the printer.

   Changing Printer Setting to Use Wireless Direct

2. Preparing a device to connect to the printer.

   Changing Settings of a Device and Connecting It to the Printer

3. Printing.

   Printing with Wireless Direct

Important

- You can connect up to 5 devices to the printer at the same time.
- Check the usage restrictions and switch the printer to the Wireless Direct.

  Restrictions

Changing Printer Setting to Use Wireless Direct

1. Check that printer is turned on.

2. Press the **Setup** button.

   The **Setup menu** screen is displayed.

3. Select **Device settings** and then press the **OK** button.

4. Select **LAN settings** and then press the **OK** button.

5. Select **Wireless Direct** and then press the **OK** button.

6. Select **Switch WL Direct** and then press the **OK** button.

7. Select **Yes** and then press the **OK** button.

   When the setting is completed, the **Wireless router info** screen is displayed.

8. Select **Done** and then press the **OK** button.

The Wireless Direct is enabled and a device can be connected to the printer wirelessly.

Note

- You can check the following on the **Wireless router info** screen. Use the ◄► button to select an item you want to check and then press the **OK** button.
  - **Network name(SSID)**: Identifier
  - **Security protocol**: Security setting and password
  - **WL Direct dev. name**: Printer name displayed on a Wi-Fi Direct compatible device

  The password is required when connecting a device to the printer. Depending on the device you are using, no password is required.

  When you connect a Wi-Fi Direct compatible device to the printer, select the printer name from your device.
- For details on how to update the identifier (SSID) and the security setting, refer to the following.

  Changing Wireless Direct Setting

Changing Settings of a Device and Connecting It to the Printer

1. Turn on Wi-Fi function on your device.

   Enable "Wi-Fi" on your device's "Setting" menu.

   For more on turning on Wi-Fi function, see your device's instruction manual.

2. Select "DIRECT-XXXX-TS700series" ("X" represents alphanumeric characters) from list displayed on your device.

   Note

   - If "DIRECT-XXXX-TS700series" does not appear on the list, Wireless Direct is not enabled.

     See Changing Printer Setting to Use Wireless Direct to enable Wireless Direct.

3. Enter password.

   Your device is connected to the printer.

   Note

   - You can check the password by printing the network settings from the printer.

     Printing Network Settings
   - Depending on the device you are using, no password is required.
   - If your Wi-Fi Direct compatible device is set to prioritize using Wi-Fi Direct and it is connecting to the printer, the printer displays a confirmation screen asking if you allow the device to connect to the printer.

     Make sure the name on the LCD is the same as that of your wireless communication device and select **Yes** and press the **OK** button.

Printing with Wireless Direct

After connecting a device and the printer, start printing from the application of your device.

Note

- For more on printing from a device via Wi-Fi, refer to the device's or application's instruction manual.
- You can print from your smartphone or tablet by installing Canon PRINT Inkjet/SELPHY. Download it from App Store and Google Play.
  - For iOS
  - For Android

Changing Wireless Direct Setting

Change the settings for the Wireless Direct following the procedure below.

1. Check that printer is turned on.
2. Press the **Setup** button.

   The **Setup menu** screen is displayed.
3. Select **Device settings** and then press the **OK** button.
4. Select **LAN settings** and then press the **OK** button.
5. Select **Wireless Direct** and then press the **OK** button.
6. Select a setting item and then press the **OK** button.

   Change name (SSID)

   Updates the identifier (SSID) for Wireless Direct or the printer name displayed on a Wi-Fi Direct compatible device.

   - **Manual setup**
     1. Select **Manual setup** and then press the **OK** button.
     2. Press **OK** button and enter new printer name.
     3. Select **Yes** and press **OK** button.
     4. Confirm your entries and press the **OK** button.
   - **Auto update**
     1. Select **Auto update** and then press the **OK** button.
     2. Select **Yes** and then press the **OK** button.
     3. Select **Done** and then press the **OK** button.

        If you select **Network name(SSID)** and press the **OK** button, you can check the updated identifier (SSID).

Change password

- **Manual setup**
  1. Select **Manual setup** and then press the **OK** button.
  2. Press **OK** button and enter new password.
  3. Select **Yes** and press **OK** button.
- **Auto update**
  1. Select **Auto update** and then press the **OK** button.
  2. Select **Yes** and then press the **OK** button.
  3. Select **Done** and then press the **OK** button.

     If you select **Security protocol** instead of **Done**, you can check the updated password.

Confirm request

To display the confirmation screen when a Wi-Fi Direct compatible device is connecting to the printer, select **Yes** and press the **OK** button.

Important

- To prevent an unauthorized access, we recommend you should not change the setting from the default.

Note

- If you change the Wireless Direct setting of the printer, also change the wireless router setting of the device.

Paper Settings

By registering the paper size and the media type loaded on the rear tray or in the cassette, you can prevent the printer from misprinting by displaying the message before printing starts when the paper size or the media type of the loaded paper differs from the print settings.

Note

- The default setting is different between when you print from Smartphone/tablet, when you print from Windows, and when you print from macOS.

  Default Setting for Displaying the Message which Prevents Misprinting

After loading paper:

- **When you close the feed slot cover:**

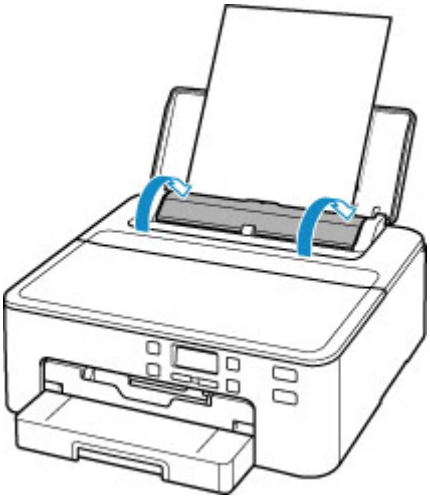

The screen to register the rear tray paper information is displayed.

```
Save the rear tray paper
[OK]Next
```

```
Size:  ◄    *A4    ►
Type:     *Plain paper
```

Register the paper size and the media type according to the loaded paper.

- **When you insert the cassette:**

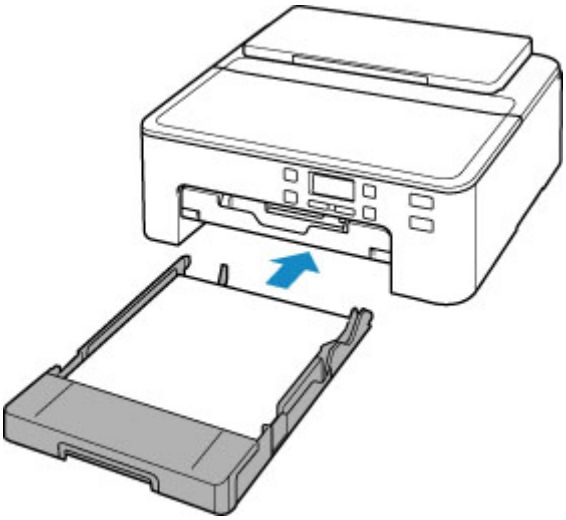

The screen to register the cassette paper information is displayed.

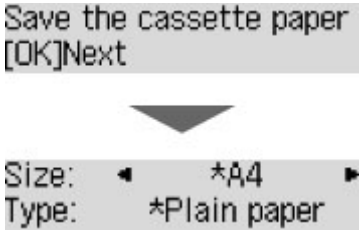

Register the page size according to the paper loaded in the cassette.

* You can load only plain paper in the cassette.

Important

- For more on the proper combination of paper settings you can specify by the printer driver for Windows and on the LCD:
  - Paper Settings on the Printer Driver and the Printer (Media Type)
  - Paper Settings on the Printer Driver and the Printer (Paper Size)

When the paper settings for printing are different from the paper information registered to the printer:

Ex:

- Paper settings for printing: A5
- Paper information registered to the printer: A4

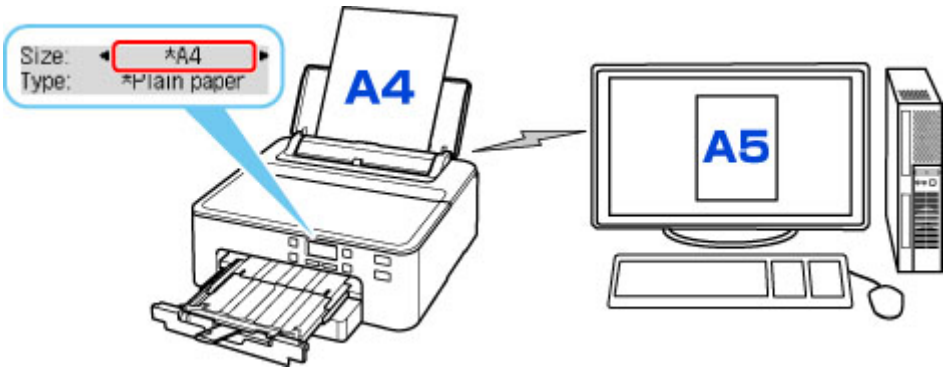

When you start printing, **Size or type of loaded paper is different from the settings** appears on the LCD.

When you press the **OK** button, the screen for selecting the processing method is displayed.

Please choose one of the following.

Note

- Depending on the setting, the choices below may not be displayed.

Print on set paper

Select if you want to print on the paper loaded without changing the paper settings.

For example, when the paper setting for printing is A5 and the paper information registered to the printer is A4, the printer starts printing on the paper loaded in the rear tray or in the cassette without changing the paper size setting for printing.

Replace the paper

Select if you want to print after replacing the paper of the rear tray or the cassette.

For example, when the paper size setting for printing is A5 and the paper information registered to the printer is A4, you load A5 sized paper in the rear tray or in the cassette before you start printing.

The paper information registration screen is displayed after replacing the paper. Register the paper information according to the paper that you loaded.

Note

- For more on the proper combination of paper settings you can specify by the printer driver for Windows and on the LCD:

  Paper Settings on the Printer Driver and the Printer (Media Type)
  Paper Settings on the Printer Driver and the Printer (Paper Size)

Cancel

Cancels printing.

Select when you change the paper settings specified for printing. Change the paper settings and try printing again.

Default Setting for Displaying the Message which Prevents Misprinting

- **When you print from smartphone/tablet:**

  The message which prevents misprinting is enabled by default.

To change the setting:

- Feed settings

- **When you print from Windows:**

  The message which prevents misprinting is disabled by default.

  To change the setting:

  - Changing the Printer Operation Mode

- **When you print from macOS:**

  The message which prevents misprinting is enabled by default.

  To change the setting:

  - Changing the Printer Operation Mode

Important

- When the message which prevents misprinting is disabled:

  The printer starts printing even though the paper settings for printing and the paper information registered to the printer are different.

Frequently Asked Questions

Network

- Cannot Find Printer on Network
- Cannot Find Printer while Using Wi-Fi
- Network Key (Password) Unknown
- Cannot Print or Connect

For other questions about network, click here.

Print

- Printer Does Not Print
- Printouts Are Blank/Blurry or Fuzzy/Inaccurate or Bleeding Colors/Streaks or Lines
- Printout Results Are Unsatisfactory
- List of Support Code for Error (Paper Jams)
- Cannot Print or Connect

Installation

- Failed to Printer Driver Installation (Windows)

Error

- Four-Digit Alphanumeric Characters Appear on LCD
- When Error Occurred
- Message (Support Code) Appears

Solve Problems

Printer Does Not Work

- Printer Does Not Turn On
- Printer Turns Off Unexpectedly or Repeatedly
- Wrong Language Appears in LCD
- LCD Is Off
- USB Connection Problems
- Cannot Communicate with Printer via USB

- Printer Does Not Print
- Printing Stops
- Cannot Print Using AirPrint
- Printer Prints Slowly
- Ink Does Not Come Out
- List of Support Code for Error (Paper Jams)
- Paper Does Not Feed Properly/"No Paper" Error
- Cannot Print on the Disc Label
- Automatic Duplex Printing Problems
- Printout Results Are Unsatisfactory

- Cannot Print from Smartphone/Tablet

Cannot Set Correctly (Network)

- Cannot Find Printer on Check Printer Settings Screen During Setup (Windows)
- Cannot Find Printer while Using Wi-Fi
- Cannot Find Printer while Using Wired LAN
- Printer Suddenly Stopped Working for Some Reason
- Network Key (Password) Unknown
- Forgot Administrator Password of Printer
- Printer Cannot Be Used After Replacing Wireless Router or Changed Router Settings
- Message Appears on Computer During Setup
- Checking Network Information
- Restoring to Factory Defaults

Cannot Set Correctly (Installation)

- Failed to Printer Driver Installation (Windows)
- Updating Printer Driver in Network Environment (Windows)

Error or Message Appears

- Four-Digit Alphanumeric Characters Appear on LCD
- When Error Occurred
- Message (Support Code) Appears
- List of Support Code for Error
- Error Message Appears on PictBridge (Wi-Fi) Compliant Device

Operation Problems

- Network Communication Problems
- Printing Problems
- Problems while Printing from Smartphone/Tablet
- Mechanical Problems
- Installation and Download Problems
- Errors and Messages
- If You Cannot Solve a Problem

Network Settings and Common Problems

Here are frequently asked questions on network. Select a connection method you are using, or you want to use.

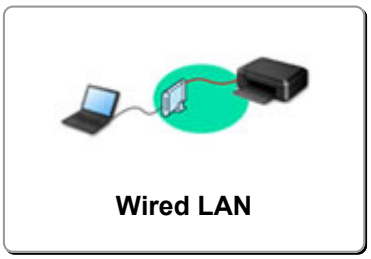

Wireless LAN

Cannot Find Printer

- Cannot Find Printer while Using Wi-Fi
- Cannot Find Printer on Check Printer Settings Screen During Setup (Windows)
- Cannot Proceed beyond Printer Connection Screen
- Printer Is Not Found by Printer Find Screen of Setup
- Searching Printer by IP Address or Host Name During Setup
- Error Occurs During Wi-Fi Setup
- Detect Same Printer Name
- Reconfiguration Method of LAN Connection/Reconfiguration Method of Wi-Fi Connection

Cannot Print or Connect

- Printer Suddenly Stopped Working for Some Reason
- Printer Cannot Be Used After Replacing Wireless Router or Changed Router Settings
- Cannot Access to Internet on Wi-Fi from Communication Device
- Connecting Printer and Wireless Router Using Easy wireless connect
- Cannot Connect Smartphone/Tablet to Wireless Router
- Error Occurs During Wi-Fi Setup
- Connects to Another Computer via LAN/Changes from USB to LAN Connection
- Cannot Print or Connect

LAN Setting Tips/Changing LAN Settings

- Network Key (Password) Unknown
- Forgot Administrator Password of Printer
- Checking Network Information
- Restoring to Factory Defaults
- Checking Wireless Router SSID/Key
- Checking Wireless Router Network Name (SSID) for Smartphone/Tablet
- Privacy Separator/SSID Separator/Network Separation Function
- Default Network Settings
- Connects to Another Computer via LAN/Changes from USB to LAN Connection
- Printing Network Settings
- Reconfiguration Method of LAN Connection/Reconfiguration Method of Wi-Fi Connection
- Checking Status Code

Printing from Smartphone/Tablet

- Connecting Printer and Wireless Router Using Easy wireless connect
- Cannot Connect Smartphone/Tablet to Wireless Router
- Checking Wireless Router Network Name (SSID) for Smartphone/Tablet
- Setting Up Using Smartphone/Tablet
- Cannot Print from Smartphone/Tablet
- Cannot Find Printer from Smartphone/Tablet while Using Bluetooth
- Downloading Canon PRINT Inkjet/SELPHY

Problems while Using Printer

- Message Appears on Computer During Setup
- Printer Prints Slowly
- No Ink Level Appears in Printer Status Monitor (Windows)

Wireless Direct

Cannot Print or Connect

- Printer Suddenly Stopped Working for Some Reason
- Cannot Access to Internet on Wi-Fi from Communication Device
- Cannot Print or Connect

LAN Setting Tips/Changing LAN Settings

- Network Key (Password) Unknown
- Forgot Administrator Password of Printer
- Checking Network Information
- Restoring to Factory Defaults
- Default Network Settings
- Printing Network Settings
- Reconfiguration Method of LAN Connection/Reconfiguration Method of Wi-Fi Connection
- Checking Status Code

Printing from Smartphone/Tablet

- Cannot Print from Smartphone/Tablet
- Cannot Find Printer from Smartphone/Tablet while Using Bluetooth
- Downloading Canon PRINT Inkjet/SELPHY

Problems while Using Printer

- Message Appears on Computer During Setup
- Printer Prints Slowly
- No Ink Level Appears in Printer Status Monitor (Windows)

Wired LAN

Cannot Find Printer

- Printer Is Not Found by Printer Find Screen of Setup
- Searching Printer by IP Address or Host Name During Setup
- Cannot Find Printer while Using Wired LAN

- Detect Same Printer Name

Cannot Print or Connect

- Printer Suddenly Stopped Working for Some Reason
- Cannot Print or Connect

LAN Setting Tips/Changing LAN Settings

- Forgot Administrator Password of Printer
- Checking Network Information
- Restoring to Factory Defaults
- Default Network Settings
- Connects to Another Computer via LAN/Changes from USB to LAN Connection
- Printing Network Settings
- Reconfiguration Method of LAN Connection/Reconfiguration Method of Wi-Fi Connection
- Checking Status Code

Problems while Using Printer

- Message Appears on Computer During Setup
- Printer Prints Slowly
- No Ink Level Appears in Printer Status Monitor (Windows)

Network Communication Problems

- Cannot Find Printer on Network
- Network Connection Problems
- Other Network Problems

Cannot Find Printer on Network

While performing printer setup:

- Cannot Find Printer on Check Printer Settings Screen During Setup (Windows)
- Cannot Proceed beyond Printer Connection Screen

While using printer:

- Cannot Find Printer while Using Wi-Fi

Note

- You cannot use the wireless LAN and the wired LAN at the same time.

Cannot Find Printer on Check Printer Settings Screen During Setup (Windows)

If the printer cannot be found and the **Check Printer Settings** screen appears after searching the printer by **Automatic search** on the **Search for Printers** screen during driver setup, click **Redetect** and search for the printer again by the IP address on the **Search for Printers** screen.

If the printer has not been found after searching it by the IP address, check network settings.

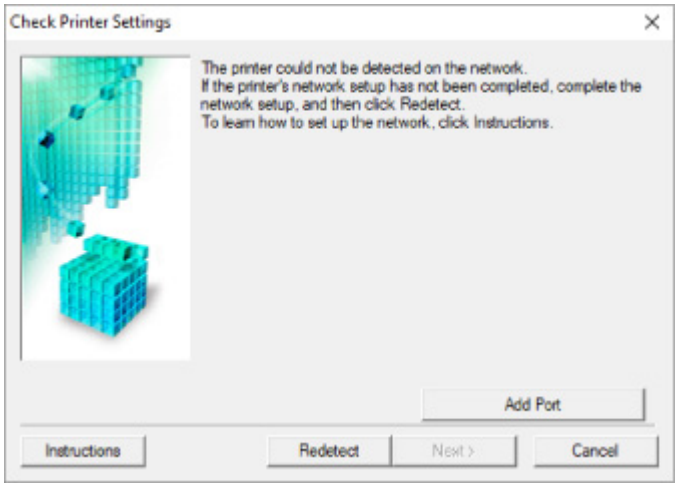

- **When using Wi-Fi:**
  - Cannot Find Printer on Check Printer Settings Screen During Wi-Fi Setup (Windows)-Checking Power Status
  - Cannot Find Printer on Check Printer Settings Screen During Wi-Fi Setup (Windows)-Checking PC Network Connection
  - Cannot Find Printer on Check Printer Settings Screen During Wi-Fi Setup (Windows)-Checking Printer's Wi-Fi Settings
  - Cannot Find Printer on Check Printer Settings Screen During Wi-Fi Setup (Windows)-Checking Wi-Fi Environment
  - Cannot Find Printer on Check Printer Settings Screen During Wi-Fi Setup (Windows)-Checking Printer's IP Address
  - Cannot Find Printer on Check Printer Settings Screen During Wi-Fi Setup (Windows)-Checking Security Software Settings
  - Cannot Find Printer on Check Printer Settings Screen During Wi-Fi Setup (Windows)-Checking Wireless Router Settings

- **When using wired LAN:**
  - Cannot Find Printer on Check Printer Settings Screen During Wired LAN Setup (Windows)-Checking LAN Cable and Router
  - Cannot Find Printer on Check Printer Settings Screen During Wired LAN Setup (Windows)-Checking PC Network Connection
  - Cannot Find Printer on Check Printer Settings Screen During Wired LAN Setup (Windows)-Checking Printer's Wired LAN Settings
  - Cannot Find Printer on Check Printer Settings Screen During Wired LAN Setup (Windows)-Checking Printer's IP Address

- Cannot Find Printer on Check Printer Settings Screen During Wired LAN Setup (Windows)- Checking Security Software Settings
- Cannot Find Printer on Check Printer Settings Screen During Wired LAN Setup (Windows)- Checking Router Settings

Cannot Find Printer on Check Printer Settings Screen During Wi-Fi Setup (Windows)-Checking Power Status

Are printer and network device (router, etc.) turned on?

Make sure the printer is turned on.

- Checking that Power Is On

Make sure network device (router, etc.) is turned on.

If printer or network device is off:

Turn on printer or network device.

It may take a while for the printer and network device to become ready for use once they are turned on. Wait a while after turning on the printer or network device, and then click **Redetect** on the **Check Printer Settings** screen to redetect the printer.

If the printer is found, follow the instructions on the screen to continue to set up network communication.

If printer and network device are on:

If the network devices are on, turn them off and on again.

If above does not solve the problem:

- Cannot Find Printer on Check Printer Settings Screen During Wi-Fi Setup (Windows)-Checking PC Network Connection

Cannot Find Printer on Check Printer Settings Screen During Wi-Fi Setup (Windows)-Checking PC Network Connection

Can you view any web pages on your computer?

Make sure the computer and network device (router, etc.) are configured and the computer is connected to the network.

If you cannot view any web pages:

Click **Cancel** on the **Check Printer Settings** screen to cancel to set up the network communication.

After that, configure the computer and network device.

For the procedures, refer to the instruction manuals supplied with the computer and network device, or contact their manufacturers.

If you can view web pages after configuring the computer and network device, try to set up the network communication from the beginning.

If you can view web pages, or if above does not solve the problem:

- Cannot Find Printer on Check Printer Settings Screen During Wi-Fi Setup (Windows)-Checking Printer's Wi-Fi Settings

Q

Cannot Find Printer on Check Printer Settings Screen During Wi-Fi Setup (Windows)-Checking Printer's Wi-Fi Settings

A

Is printer set to allow wireless communication?

Make sure the Wi-Fi or Wi-Fi icon is displayed on the LCD.

If icon is not displayed:

The printer is not set to allow wireless communication. Turn on wireless communication on the printer.

If icon is displayed:

- Cannot Find Printer on Check Printer Settings Screen During Wi-Fi Setup (Windows)-Checking Wi-Fi Environment

Cannot Find Printer on Check Printer Settings Screen During Wi-Fi Setup (Windows)-Checking Wi-Fi Environment

Is the printer connected to the wireless router?

Use the icon on the LCD to make sure the printer is connected to the wireless router.

If Wi-Fi is displayed:

- Check wireless router configuration.

  After checking the wireless router setting, make sure the printer is not placed far away from the wireless router.

  The printer can be up to 50 m (164 ft) from the wireless router indoors. Make sure the printer is close enough to the wireless router to be used.

  Place the printer and wireless router where there are no obstacles between them. Wireless communication between different rooms or floors is generally poor. Wireless communication can be impeded by building materials containing metal or concrete. If the printer cannot communicate with the computer over a Wi-Fi due to a wall, place the printer and the computer in the same room.

  In addition, if a device like a microwave oven that emits radio waves of the same frequency bandwidth as a wireless router is nearby, it may cause interference. Place the wireless router as far away from interference sources as possible.

  Note

  - Though an antenna is attached to most wireless routers, note that some of them have it inside.

- Check wireless router setting.

  The printer and wireless router should be connected using 2.4 GHz bandwidth. Make sure the wireless router for the printer's destination is configured to use 2.4 GHz bandwidth.

  Important

  - Note that some wireless routers distinguish network names (SSIDs) by the last alphanumeric character according to their bandwidth (2.4 GHz or 5 GHz) or purpose (for computer or game machine).

  To check the network name (SSID) of the wireless router the printer is connected to, print the network settings.

  Printing Network Settings

For details, see the instruction manual supplied with the wireless router or contact the manufacturer.

After taking measures above, click **Redetect** on the **Check Printer Settings** screen to redetect the printer.

If the printer is found, follow the instructions on the screen to continue to set up network communication.

If the printer cannot be detected, the printer is not connected to the wireless router. Connect the printer to the wireless router.

After connecting the printer to the wireless router, set up the network communication from the beginning.

If Wi-Fi is displayed:

- Cannot Find Printer on Check Printer Settings Screen During Wi-Fi Setup (Windows)-Checking Printer's IP Address

Cannot Find Printer on Check Printer Settings Screen During Wi-Fi Setup (Windows)-Checking Printer's IP Address

Is printer's IP address specified correctly?

If printer's IP address is not specified correctly, the printer may not be found. Make sure whether printer's IP address is not used for another device.

To check the printer's IP address, print out the network settings information.

- Printing Network Settings

If the IP address is not specified correctly:

See If an error screen appears: and specify the IP address.

If the IP address is specified correctly:

- Cannot Find Printer on Check Printer Settings Screen During Wi-Fi Setup (Windows)-Checking Security Software Settings

Cannot Find Printer on Check Printer Settings Screen During Wi-Fi Setup (Windows)-Checking Security Software Settings

Disable block in firewall function temporarily.

The firewall of your security software or operation system for computer may limit communication between the printer and your computer. Check the firewall setting of your security software or operation system or the message shown on your computer and disable block temporarily.

If firewall interferes with setup:

- **If message appears:**

  If a message appears warning that Canon software is attempting to access the network, set the security software to allow access.

  After allowing the software to access, click **Redetect** on the **Check Printer Settings** screen to redetect the printer.

  If the printer is found, follow the instructions on the screen to continue to set up network communication.

- **If no message appears:**

  Cancel the setup, and then set the security software to allow Canon software to access the network.

  The file **SETUP.exe** or **SETUP64.exe** in the **win** > **Driver** > **DrvSetup** folder on the Setup CD-ROM

  After setting the security software, redo the network communication setup from the beginning.

  After setup is completed, enable firewall.

Note

- For more on firewall settings of your operating system or security software, see instruction manual or contact its manufacturer.

If above does not solve the problem:

Cannot Find Printer on Check Printer Settings Screen During Wi-Fi Setup (Windows)-Checking Wireless Router Settings

Cannot Find Printer on Check Printer Settings Screen During Wi-Fi Setup (Windows)-Checking Wireless Router Settings

Check wireless router settings.

Check wireless router network connection settings, such as IP address filtering, MAC address filtering, encryption key, and DHCP function.

Make sure the same radio channel is assigned to the printer and the wireless router.

To check the settings of the wireless router, see the instruction manual supplied with the wireless router or contact the manufacturer.

In addition, make sure the wireless router you are using is configured to use 2.4 GHz bandwidth.

Important

- Depending on the wireless router, note that different network name (SSID) is assigned for a bandwidth (2.4 GHz or 5 GHz) or its usage (for PC or game machine) using alphanumeric characters at the end of network name (SSID).

After checking the wireless router settings, click **Redetect** on the **Check Printer Settings** screen to redetect the printer.

If the printer is found, follow the instructions on the screen to continue to set up network communication.

Cannot Find Printer on Check Printer Settings Screen During Wired LAN Setup (Windows)-Checking LAN Cable and Router

Is LAN cable connected, and are printer and router on?

Make sure the LAN cable is connected.

Make sure the printer is turned on.

- Checking that Power Is On

Make sure the router is turned on.

If LAN cable is connected and printer or network device is off:

Turn on printer or network device.

It may take a while for the printer and network device to become ready for use once they are turned on. Wait a while after turning on the printer or network device, and then click **Redetect** on the **Check Printer Settings** screen to redetect the printer.

If the printer is found, follow the instructions on the screen to continue to set up the network communication.

If LAN cable is connected and printer and network device are on:

If the printer cannot not be found after trying to redetect it, even though the printer and the network device are on:

- Cannot Find Printer on Check Printer Settings Screen During Wired LAN Setup (Windows)-Checking PC Network Connection

Cannot Find Printer on Check Printer Settings Screen During Wired LAN Setup (Windows)-Checking PC Network Connection

Can you view any web pages on your computer?

Make sure the computer and network device (router, etc.) are configured and the computer is connected to the network.

If you cannot view any web pages:

Click **Cancel** on the **Check Printer Settings** screen to cancel to set up the network communication.

After that, configure the computer and network device.

For the procedures, refer to the instruction manuals supplied with the computer and network device, or contact their manufacturers.

If you can view web pages after configuring the computer and network device, try to set up the network communication from the beginning.

If you can view web pages:

- Cannot Find Printer on Check Printer Settings Screen During Wired LAN Setup (Windows)-Checking Printer's Wired LAN Settings

Cannot Find Printer on Check Printer Settings Screen During Wired LAN Setup (Windows)-Checking Printer's Wired LAN Settings

Is printer set to allow wired communication?

Make sure the LAN icon is displayed on the LCD.

If icon is not displayed:

The printer is not set to allow wired communication. Turn on wired communication on the printer.

Once you have turned on wired communication, redo the network communication setup from the beginning.

If icon is displayed:

- Cannot Find Printer on Check Printer Settings Screen During Wired LAN Setup (Windows)-Checking Printer's IP Address

Cannot Find Printer on Check Printer Settings Screen During Wired LAN Setup (Windows)-Checking Printer's IP Address

Is printer's IP address specified correctly?

If printer's IP address is not specified correctly, the printer may not be found. Make sure whether printer's IP address is not used for another device.

To check the printer's IP address, print out the network settings information.

- Printing Network Settings

If the IP address is not specified correctly:

See If an error screen appears: and specify the IP address.

If the IP address is specified correctly:

- Cannot Find Printer on Check Printer Settings Screen During Wired LAN Setup (Windows)-Checking Security Software Settings

Cannot Find Printer on Check Printer Settings Screen During Wired LAN Setup (Windows)-Checking Security Software Settings

Disable block in firewall function temporarily.

The firewall of your security software or operation system for computer may limit communication between the printer and your computer. Check the firewall setting of your security software or operation system or the message shown on your computer and disable block temporarily.

If firewall interferes with setup:

- **If message appears:**

  If a message appears warning that Canon software is attempting to access the network, set the security software to allow access.

  After allowing the software to access, click **Redetect** on the **Check Printer Settings** screen to redetect the printer.

  If the printer is found, follow the instructions on the screen to continue to set up the network communication.

- **If no message appears:**

  Cancel the setup, and then set the security software to allow Canon software below to access the network.

  The file **SETUP.exe** or **SETUP64.exe** in the **win** > **Driver** > **DrvSetup** folder on the Setup CD-ROM

  After setting the security software, redo the network communication setup from the beginning.

  After setup is completed, enable firewall.

Note

- For more on firewall settings of your operating system or security software, see instruction manual or contact its manufacturer.

If above does not solve the problem:

Cannot Find Printer on Check Printer Settings Screen During Wired LAN Setup (Windows)-Checking Router Settings

Cannot Find Printer on Check Printer Settings Screen During Wired LAN Setup (Windows)-Checking Router Settings

Check router settings.

Check router network connection settings such as IP address filtering, MAC address filtering, and DHCP function.

For more on checking the settings of the router, refer to the instruction manual supplied with the router or contact its manufacturer.

After checking the router settings, click **Redetect** on the **Check Printer Settings** screen to redetect the printer.

If the printer is found, follow the instructions on the screen to continue to set up network communication.

Cannot Proceed beyond Printer Connection Screen

If you cannot proceed beyond the **Printer Connection** screen, check the following.

Check1 Make sure USB cable is securely plugged in to printer and computer.

Connect the printer and the computer using a USB cable as the illustration below. The USB port is located at the back of the printer.

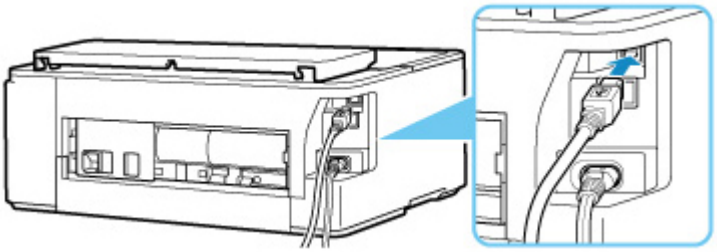

Important

- Connect the "Type-B" terminal to the printer with the notched side facing UP. For details, refer to the instruction manual supplied with the USB cable.

Check2 Follow procedure below to connect printer and computer again.

Important

- For macOS, make sure the lock icon is on the lower left of the **Printers & Scanners** screen.

  If the icon (locked) is displayed, click the icon to unlock. (The administrator name and the password are necessary to unlock.)

1. Unplug USB cable from printer and computer and connect it again.
2. Make sure no printer operation is in progress and turn off.
3. Turn on printer.

Check3 If you cannot resolve problem, follow procedure below to reinstall printer driver.

- **For Windows:**
  1. Click **Cancel**.
  2. Click **Back to Top** on **Setup Canceled** screen.

3. Click **Exit** on **Start Setup** screen and finish setup.

4. Turn off printer.

5. Restart computer.

6. Make sure you have no application software running.

7. Perform setup on top page of Online Manual.

Note

- You can use the Setup CD-ROM to redo setup.

- **For macOS:**

1. Click **Next**.

   The screen telling you that installation has not been completed appears.

2. Click **No**.

   The screen to select application software to install appears.

3. Click **Back to Top**.

4. Click **Exit** on **Start Setup** screen.

5. Turn off printer.

6. Restart computer.

7. Make sure you have no application software running.

8. Perform setup on top page of Online Manual.

Cannot Find Printer while Using Wi-Fi

Check1 Make sure printer is turned on.

If not, make sure the printer is securely plugged in and press **ON** button to turn on.

The **ON** lamp flashes while the printer is initializing. Wait until the **ON** lamp stops flashing and remains lit.

Check2 Check the Wi-Fi icon on LCD.

The Wi-Fi icon appears by pressing the **Setup** button.

If the icon is not displayed, select **Enable** for **Wi-Fi enab./disable** in **Wi-Fi** under **LAN settings** under **Device settings** from the setup menu.

If the Wi-Fi icon is displayed, see Check 3 or later checking items to make sure whether printer setup is complete or the settings of wireless router to connect are correct.

Check3 Make sure printer setup is complete on the computer.

If it is not, perform setup from the web page.

For Windows, you can perform setup using the Setup CD-ROM.

Note

- IJ Network Device Setup Utility allows you to diagnose and repair the network status.

  Select the link below to download IJ Network Device Setup Utility and install it.

  Checking Printer Connection Status Using IJ Network Device Setup Utility

  See below for starting up IJ Network Device Setup Utility.

  - **For Windows:**

    Starting Up IJ Network Device Setup Utility

  - **For macOS:**

    Starting Up IJ Network Device Setup Utility

Check4 Make sure printer and wireless router network settings match.

Make sure the network settings of the printer (e.g. network name (SSID) or network key (password), etc.) are identical with those of the wireless router.

To check the settings of the wireless router, refer to the instruction manual provided with it or contact its manufacturer.

Note

- Use 2.4 GHz frequency band to connect to a wireless router. Match the network name (SSID) set for the printer with that for 2.4 GHz frequency band of the wireless router.

To check the network name (SSID) set for the printer, print out the network setting information.

Printing Network Settings

Note

- IJ Network Device Setup Utility allows you to diagnose and repair the network status.

  Select the link below to download IJ Network Device Setup Utility and install it.

  Checking Printer Connection Status Using IJ Network Device Setup Utility

  See below for starting up IJ Network Device Setup Utility.

  - **For Windows:**

    Starting Up IJ Network Device Setup Utility

  - **For macOS:**

    Starting Up IJ Network Device Setup Utility

Check5 Make sure the printer is not placed too far away from the wireless router.

If the distance between the printer and wireless router is too far, wireless communication becomes poor. Place the printer and wireless router close to each other.

Note

- Though an antenna is attached to most wireless routers, note that some of them have it inside.

Check6 Make sure wireless signal is strong. Monitor signal strength and move printer and wireless router as necessary.

Place the printer and wireless router where there are no obstacles between them. Wireless communication between different rooms or floors is generally poor. Wireless communication can be impeded by building materials containing metal or concrete. If the printer cannot communicate with the computer over a Wi-Fi due to a wall, place the printer and the computer in the same room.

In addition, if a device like a microwave oven that emits radio waves of the same frequency bandwidth as a wireless router is nearby, it may cause interference. Place the wireless router as far away from interference sources as possible.

Check the signal strength on the LCD.

LCD and Operation Panel

Note

- IJ Network Device Setup Utility allows you to diagnose and repair the network status.

  Select the link below to download IJ Network Device Setup Utility and install it.

  Checking Printer Connection Status Using IJ Network Device Setup Utility

  See below for starting up IJ Network Device Setup Utility.

- **For Windows:**

  Starting Up IJ Network Device Setup Utility

- **For macOS:**

  Starting Up IJ Network Device Setup Utility

Check7 Make sure the computer is connected to the wireless router.

For more on how to check the computer settings or connection status, see your computer instruction manual or contact its manufacturer.

Note

- If you use a smartphone or tablet, make sure the Wi-Fi is enabled on the device.

Check8 Make sure **Enable bidirectional support** is selected in the **Ports** sheet of the **Printer properties** dialog box. (Windows)

If not, select it to enable bidirectional support.

Check9 Make sure security software's firewall is off.

If your security software's firewall is on, a message may appear warning you that Canon software is attempting to access the network. If this warning message appears, set security software to always allow access.

If you are using any programs that switch between network environments, check their settings. Some programs use a firewall by default.

Check10 If printer is connected to an AirPort Base Station via LAN, make sure you use alphanumeric characters for network name (SSID). (macOS)

If the problem is not resolved, redo setup from the web page.

For Windows, you can redo setup using the Setup CD-ROM.

Network Connection Problems

- Printer Suddenly Stopped Working for Some Reason
- Network Key (Password) Unknown
- Printer Cannot Be Used After Replacing Wireless Router or Changed Router Settings

Printer Suddenly Stopped Working for Some Reason

- Cannot Connect to a Printer after Network Configuration Changes
- Cannot Connect to a Printer via Wireless LAN (Wi-Fi)
- Cannot Connect to a Printer through Wireless Direct
- Cannot Connect to a Printer via Wired LAN
- Cannot Print through Network

Q Cannot Connect to a Printer after Network Configuration Changes

A

It may take a while for the computer to obtain an IP address, or you may need to restart your computer.

Make sure the computer has obtained a valid IP address, and try again to find the printer.

Q Cannot Connect to a Printer via Wireless LAN (Wi-Fi)

A

Check1 Check the power status of printer, network devices (e.g. wireless router), and smartphone/tablet.

- Turn on the printer or devices.
- If the power is already turned on, cycle the power switch.
- It may be necessary to resolve wireless router problems (e.g. update interval of a key, problems of DHCP update interval, energy saving mode, etc.) or to update the wireless router firmware.

For details, contact the manufacturer of your wireless router.

Check2 Can you view any web pages on your computer?

Make sure your computer is connected to the wireless router properly.

For more on checking computer settings or connection status, see the instruction manual supplied with the computer or contact the manufacturer.

Check3 Is the printer connected to the wireless router?

Use the icon on the LCD to check the connection status between the printer and wireless router. If the Wi-Fi icon is not displayed, Wi-Fi is disabled. Turn on wireless communication on the printer.

Check4 Make sure the printer and wireless router network settings match.

Make sure the network settings of the printer (e.g. network name (SSID) or network key (password), etc.) are identical with those of the wireless router.

To check the settings of the wireless router, refer to the instruction manual provided with it or contact its manufacturer.

Note

- Use 2.4 GHz frequency band to connect to a wireless router. Match the network name (SSID) set for the printer with that for 2.4 GHz frequency band of the wireless router.

To check the current network settings of the printer, print out the network setting information.

Printing Network Settings

Note

- IJ Network Device Setup Utility allows you to diagnose and repair the network status.

  Select the link below to download IJ Network Device Setup Utility and install it.

  Checking Printer Connection Status Using IJ Network Device Setup Utility

  See below for starting up IJ Network Device Setup Utility.

  - **For Windows:**

    Starting Up IJ Network Device Setup Utility

  - **For macOS:**

    Starting Up IJ Network Device Setup Utility

Check5 Make sure the printer is not placed too far away from the wireless router.

If the distance between the printer and wireless router is too far, wireless communication becomes poor. Place the printer and wireless router close to each other.

Note

- Though an antenna is attached to most wireless routers, note that some of them have it inside.

Check6 Make sure wireless signal is strong. Monitor signal status and move printer and wireless router as necessary.

Place the printer and wireless router where there are no obstacles between them. Wireless communication between different rooms or floors is generally poor. Wireless communication can be impeded by building materials containing metal or concrete. If the printer cannot communicate with the computer over a Wi-Fi due to a wall, place the printer and the computer in the same room.

In addition, if a device like a microwave oven that emits radio waves of the same frequency bandwidth as a wireless router is nearby, it may cause interference. Place the wireless router as far away from interference sources as possible.

Check the signal strength on the LCD.

LCD and Operation Panel

Note

- IJ Network Device Setup Utility allows you to diagnose and repair the network status.

  Select the link below to download IJ Network Device Setup Utility and install it.

  Checking Printer Connection Status Using IJ Network Device Setup Utility

  See below for starting up IJ Network Device Setup Utility.

- **For Windows:**
  - Starting Up IJ Network Device Setup Utility
- **For macOS:**
  - Starting Up IJ Network Device Setup Utility

Check7 Make sure of the Wi-Fi channel numbers used for your computer.

You need to have the same Wi-Fi channel number that you are using for the wireless router as your computer. It is normally set in the way that you can use all the Wi-Fi channels. However, when the channels that you are using are restricted, the Wi-Fi channels do not match.

See the instruction manual provided with your computer and check the Wi-Fi channel number available for your computer.

Check8 Make sure channel set on wireless router is a usable channel as confirmed in Check 7.

If it is not, change the channel set on the wireless router.

Check9 Make sure security software's firewall is off.

If your security software's firewall is on, a message may appear warning you that Canon software is attempting to access the network. If this warning message appears, set security software to always allow access.

If you are using any programs that switch between network environments, check their settings. Some programs use a firewall by default.

Check10 If printer is connected to an AirPort Base Station via LAN, make sure you use alphanumeric characters for network name (SSID). (macOS)

If the problem is not resolved, redo setup from the web page.

For Windows, you can redo setup using the Setup CD-ROM.

- **Positioning:**

  Place the printer and wireless router where there are no obstacles between them.

Q Cannot Connect to a Printer through Wireless Direct

A

Check1 Check the power status of printer and other devices (smartphone or tablet).

Turn on the printer or devices.

If the power is already turned on, cycle the power switch.

Check2 Check printer settings.

Select **Device settings** > **LAN settings** > **Wireless Direct** > **Switch WL Direct** in this order and select **Yes**.

Check3 Check the settings of your device (smartphone/tablet).

Make sure Wi-Fi is enabled on your device.

For details, refer to your device's instruction manual.

Check4 Make sure printer is selected as connection for device (e.g. smartphone or tablet).

Select the network name (SSID) for Wireless Direct specified for the printer as the connection destination for devices.

Check the destination on your device.

For details, refer to your device's instruction manual or visit the manufacturer's website.

To check the network name (SSID) for Wireless Direct specified for the printer, display it using the operation panel of the printer or print out the network setting information of the printer.

- Display on the LCD.

  LAN settings

- Print the network settings.

  Printing Network Settings

Check5 Have you entered the proper password specified for the Wireless Direct?

To check the password specified for the printer, display it using the operation panel of the printer or print out the network setting information of the printer.

- Display on the LCD.

  LAN settings

- Print the network settings.

  Printing Network Settings

Check6 Make sure the printer is not placed too far away from the device.

If the distance between the printer and device is too far, wireless communication becomes poor. Place the printer and device close to each other.

Check7 Make sure 5 devices are already connected.

Wireless Direct does not allow more than 5 devices to be connected.

Q Cannot Connect to a Printer via Wired LAN

A

Check1 Make sure the printer is turned on.

Check2 Make sure the LAN cable is connected properly.

Make sure the printer is connected to the router with the LAN cable. If the LAN cable is loose, connect the cable properly.

If the LAN cable is connected to the WAN side of the router, connect the cable to the LAN side of the router.

If the problem is not resolved, redo setup from the web page.

For Windows, you can redo setup using the Setup CD-ROM.

Q Cannot Print through Network

A

Check1 Make sure the computer is connected to the wireless router.

For more on how to check the computer settings or connection status, see your computer instruction manual or contact its manufacturer.

Check2 If printer driver is not installed, install it. (Windows)

Install the printer driver using the Setup CD-ROM or install it from the Canon website.

Check3 When using Wi-Fi, make sure wireless router does not restrict which computers can access it.

For more on connecting to and setting up your wireless router, see the wireless router instruction manual or contact its manufacturer.

Note

- To check the MAC address or IP address of your computer, see Checking Computer IP Address or MAC Address.

Network Key (Password) Unknown

- WPA/WPA2 or WEP Key Set for Wireless Router Unknown, Cannot Connect
- Setting an Encryption Key

Q WPA/WPA2 or WEP Key Set for Wireless Router Unknown, Cannot Connect

A

For more on setting up a wireless router, see the instruction manual provided with the wireless router or contact its manufacturer. Make sure your computer can communicate with the wireless router.

Note

- IJ Network Device Setup Utility allows you to diagnose and repair the network status.

  Select the link below to download IJ Network Device Setup Utility and install it.

  - Checking Printer Connection Status Using IJ Network Device Setup Utility

  See below for starting up IJ Network Device Setup Utility.

  - **For Windows:**
    - Starting Up IJ Network Device Setup Utility
  - **For macOS:**
    - Starting Up IJ Network Device Setup Utility

Q Setting an Encryption Key

A

For more on setting up a wireless router, see the instruction manual provided with the wireless router or contact its manufacturer. Make sure your computer can communicate with the wireless router.

Note

- IJ Network Device Setup Utility allows you to diagnose and repair the network status.

  Select the link below to download IJ Network Device Setup Utility and install it.

  - Checking Printer Connection Status Using IJ Network Device Setup Utility

  See below for starting up IJ Network Device Setup Utility.

  - **For Windows:**
    - Starting Up IJ Network Device Setup Utility

- **For macOS:**

  Starting Up IJ Network Device Setup Utility

Selecting WPA, WPA2, or WPA/WPA2 is recommended for security reason. If your wireless router is compatible with WPA/WPA2, you can also use WPA2 or WPA.

- **Using WPA/WPA2 (Windows)**

  The authentication method, Wi-Fi password, and dynamic encryption type must be identical among the wireless router, the printer, and your computer.

  Enter the Wi-Fi password configured on the wireless router.

  Either TKIP (basic encryption) or AES (secure encryption) is selected automatically as the dynamic encryption method.

  For details, see If WPA/WPA2 Details Screen Appears.

  Note

  - This printer supports WPA/WPA2-PSK (WPA/WPA2-Personal) and WPA2-PSK (WPA2-Personal).

- **Using WEP**

  The length or format of the Wi-Fi password and authentication method must be identical among the wireless router, the printer, and your computer.

  To communicate with a wireless router that generates a password automatically, you must set the printer to use the password generated by the wireless router.

  - **For Windows:**

    When the **WEP Details** screen appears after you click **Search...** on the **Network Settings (Wi-Fi)** screen in IJ Network Device Setup Utility, follow the on-screen instructions to set the password length, format, and the password to use.

    For details, see If WEP Details Screen Appears.

  Note

  - If the printer is connected to an AirPort Base Station via LAN:

    If the printer is connected to an AirPort Base Station via a LAN, check the settings in **Wireless Security** of **AirPort Utility**.

    - Select **64 bit** if **WEP 40 bit** is selected for password length in AirPort Base Station.
    - Select **1** for the password to use. Otherwise, computer will not be able to communicate with printer via the wireless router.

Printer Cannot Be Used After Replacing Wireless Router or Changed Router Settings

When you replace a wireless router, redo the network setup for the printer according to the replaced one.

Perform setup from the web page.

For Windows, you can perform setup using the Setup CD-ROM.

Note

- IJ Network Device Setup Utility allows you to diagnose and repair the network status.

  Select the link below to download IJ Network Device Setup Utility and install it.

  Checking Printer Connection Status Using IJ Network Device Setup Utility

  See below for starting up IJ Network Device Setup Utility.

  - **For Windows:**

    Starting Up IJ Network Device Setup Utility

  - **For macOS:**

    Starting Up IJ Network Device Setup Utility

If this does not solve the problem, see below.

Cannot Communicate with Printer After Enabling MAC/IP Address Filtering or Encryption Key on Wireless Router

With Encryption On, Cannot Communicate with Printer After Changing Encryption Type at Wireless Router

Cannot Communicate with Printer After Enabling MAC/IP Address Filtering or Encryption Key on Wireless Router

Check1 Check wireless router setting.

To check the wireless router setting, see the instruction manual provided with the wireless router or contact its manufacturer. Make sure the computer and the wireless router can communicate with each other under this setting.

Check2 If filtering MAC addresses or IP addresses at wireless router, check that MAC addresses or IP addresses for computer, network device, and printer are registered.

Check3 If using WPA/WPA2 key or a password, make sure encryption key for computer, network device, and printer matches key set for wireless router.

The length or format of the Wi-Fi password and authentication method must be identical among the wireless router, the printer, and your computer.

For details, see Setting an Encryption Key.

Q With Encryption On, Cannot Communicate with Printer After Changing Encryption Type at Wireless Router

A

If you change the encryption type for the printer and it subsequently cannot communicate with the computer, make sure the encryption type for the computer and the wireless router matches the type set for the printer.

- Cannot Communicate with Printer After Enabling MAC/IP Address Filtering or Encryption Key on Wireless Router

Other Network Problems

- Checking Network Information
- Restoring to Factory Defaults

Checking Network Information

- Checking Printer IP Address or MAC Address
- Checking Computer IP Address or MAC Address
- Checking Communication Between the Computer, the Printer, and the Wireless Router
- Checking Network Setting Information

Q Checking Printer IP Address or MAC Address

A

To check the printer's IP Address or MAC address, print out the network settings information.

- Printing Network Settings

For Windows, you can check the network setting information on the computer screen.

- Canon IJ Network Device Setup Utility Screen

Q Checking Computer IP Address or MAC Address

A

To check the IP Address or MAC address of your computer, follow the instructions below.

- **For Windows:**

  1. Select **Command Prompt** as shown below.

     In Windows 10, right-click **Start** and select **Command Prompt**.

     In Windows 8.1, select **Command Prompt** from the **Start** screen. If **Command Prompt** is not displayed on the **Start** screen, select the **Search** charm and search for "**Command Prompt**".

     In Windows 7, click **Start** > **All Programs** > **Accessories** > **Command Prompt**.

  2. Enter "ipconfig/all" and press **Enter**.

     The IP address and MAC address of your computer appear. If your computer is not connected to a network, the IP address does not appear.

- **For macOS:**

  1. Select **System Preferences** from Apple menu, and then click **Network**.

  2. Make sure network interface used by computer is selected, and then click **Advanced**.

     When you are using Wi-Fi on your computer, make sure **Wi-Fi** is selected as network interface. When you are using wired LAN, make sure **Ethernet** is selected.

3. Click **TCP/IP** to check the IP address, or click **Hardware** to check the MAC address.

Q Checking Communication Between the Computer, the Printer, and the Wireless Router

A

Perform a ping test to check if communication is taking place.

- **For Windows:**

1. Select **Command Prompt** as shown below.

   In Windows 10, right-click **Start** and select **Command Prompt**.

   In Windows 8.1, select **Command Prompt** from the **Start** screen. If **Command Prompt** is not displayed on the **Start** screen, select the **Search** charm and search for "**Command Prompt**".

   In Windows 7, click **Start** > **All Programs** > **Accessories** > **Command Prompt**.

2. Type the ping command and press **Enter**.

   The ping command is as follows: ping XXX.XXX.XXX.XXX

   "XXX.XXX.XXX.XXX" is the IP address of the target device.

   If communication is taking place, a message like the one shown below appears.

   Reply from XXX.XXX.XXX.XXX: bytes=32 time=10ms TTL=255

   If **Request timed out** appears, communication is not taking place.

- **For macOS:**

1. Start **Network Utility** as shown below.

   Select **Computer** from **Go** menu of Finder, double-click **Macintosh HD** > **System** > **Library** > **CoreServices** > **Applications** > **Network Utility**.

2. Click **Ping**.

3. Make sure **Send only XX pings** (XX are numbers) is selected.

4. Enter IP address of target printer or target wireless router in **Enter the network address to ping**.

5. Click **Ping**.

   "XXX.XXX.XXX.XXX" is the IP address of the target device.

   A message such as the following appears.

64 bytes from XXX.XXX.XXX.XXX: icmp_seq=0 ttl=64 time=3.394 ms

64 bytes from XXX.XXX.XXX.XXX: icmp_seq=1 ttl=64 time=1.786 ms

64 bytes from XXX.XXX.XXX.XXX: icmp_seq=2 ttl=64 time=1.739 ms

--- XXX.XXX.XXX.XXX ping statistics ---

3 packets transmitted, 3 packets received, 0% packet loss

If packet loss is 100%, communication is not taking place. Otherwise, computer is communicating with target device.

Q Checking Network Setting Information

A

To check the printer's network settings information, print out the network settings information.

- Printing Network Settings

Restoring to Factory Defaults

Important

- Initialization erases all network settings on the printer, making printing operation from a computer over a network impossible. To use the printer over a network again after restoring it to the factory defaults, redo setup from the web page.

  For Windows, you can perform setup using the Setup CD-ROM.

Initialize the network setting using the printer's operation panel.

- Reset setting

Problems while Printing from Smartphone/Tablet

- Cannot Print from Smartphone/Tablet

Cannot Print from Smartphone/Tablet

If you cannot print from your smartphone/tablet, it is possible that your smartphone/tablet cannot communicate with the printer.

Check the cause of your problem according to the connection method.

- Cannot Communicate with Printer over Wireless LAN
- Cannot Communicate with Printer while It Is in Wireless Direct

Note

- For problems on printing with other connection methods or more on performing settings of each connection method:
  - Using PIXMA/MAXIFY Cloud Link
  - Printing with Google Cloud Print
  - Printing from iOS Device (AirPrint)

Q Cannot Communicate with Printer over Wireless LAN

A

If your smartphone/tablet cannot communicate with the printer, check the following.

Check1 Check the power status of printer, network devices (e.g. wireless router), and smartphone/tablet.

- Turn on the printer or devices.
- If the power is already turned on, cycle the power switch.
- It may be necessary to resolve wireless router problems (e.g. update interval of a key, problems of DHCP update interval, energy saving mode, etc.) or to update the wireless router firmware.

For details, contact the manufacturer of your wireless router.

Check2 Check the settings of your device (smartphone/tablet).

Make sure Wi-Fi is enabled on your device.

For details, refer to your device's instruction manual.

Check3 Is the printer connected to the wireless router?

Use the icon on the LCD to check the connection status between the printer and wireless router. If the Wi-Fi icon is not displayed, Wi-Fi is disabled. Turn on wireless communication on the printer.

Check4 Are network settings of printer identical with those of wireless router?

Make sure the network settings of the printer (e.g. network name (SSID) or network key (password), etc.) are identical with those of the wireless router.

To check the settings of the wireless router, refer to the instruction manual provided with it or contact its manufacturer.

To check the current network settings of the printer, print out the network setting information.

- Printing Network Settings

Note

- IJ Network Device Setup Utility allows you to diagnose and repair the network status.

  Select the link below to download IJ Network Device Setup Utility and install it.

  - Checking Printer Connection Status Using IJ Network Device Setup Utility

  See below for starting up IJ Network Device Setup Utility.

  - **For Windows:**
    - Starting Up IJ Network Device Setup Utility
  - **For macOS:**
    - Starting Up IJ Network Device Setup Utility

Check5 Are network settings of your smartphone/tablet identical with those of wireless router?

Make sure the network settings of the printer (e.g. network name (SSID) or network key (password), etc.) are identical with those of the wireless router.

To check the settings of your smartphone/tablet, refer to the instruction manual provided with it.

If the network settings of your smartphone/tablet are not identical with those of the wireless router, change the network settings of it to match with those of the wireless router.

Check6 Make sure the printer is not placed too far away from the wireless router.

If the distance between the printer and wireless router is too far, wireless communication becomes poor. Place the printer and wireless router close to each other.

Note

- Though an antenna is attached to most wireless routers, note that some of them have it inside.

Check7 Make sure wireless signal is strong. Monitor signal status and move printer and wireless router as necessary.

Place the printer and wireless router where there are no obstacles between them. Wireless communication between different rooms or floors is generally poor. Wireless communication can be impeded by building materials containing metal or concrete. If the printer cannot communicate with the computer over a Wi-Fi due to a wall, place the printer and the computer in the same room.

In addition, if a device like a microwave oven that emits radio waves of the same frequency bandwidth as a wireless router is nearby, it may cause interference. Place the wireless router as far away from interference sources as possible.

Check the signal strength on the LCD.

- LCD and Operation Panel

Note

- IJ Network Device Setup Utility allows you to diagnose and repair the network status.

Select the link below to download IJ Network Device Setup Utility and install it.

Checking Printer Connection Status Using IJ Network Device Setup Utility

See below for starting up IJ Network Device Setup Utility.

- **For Windows:**

  Starting Up IJ Network Device Setup Utility

- **For macOS:**

  Starting Up IJ Network Device Setup Utility

Q Cannot Communicate with Printer while It Is in Wireless Direct

A

If your smartphone/tablet cannot communicate with the printer in the Wireless Direct, check the following.

Check1 Check the power status of printer and other devices (smartphone or tablet).

Turn on the printer or devices.

If the power is already turned on, cycle the power switch.

Check2 Is Wireless Direct enabled?

From the **Setup menu** screen, select **Device settings** > **LAN settings** > **Wireless Direct** > **Switch WL Direct** in this order and select **Yes**.

Check3 Check the settings of your device (smartphone/tablet).

Make sure Wi-Fi is enabled on your device.

For details, refer to your device's instruction manual.

Check4 Make sure printer is selected as connection for device (e.g. smartphone or tablet).

Select the network name (SSID) for Wireless Direct specified for the printer as the connection destination for devices.

Check the destination on your device.

For details, refer to your device's instruction manual or visit the manufacturer's website.

To check the network name (SSID) for Wireless Direct specified for the printer, display it using the operation panel of the printer or print out the network setting information of the printer.

- Display on the LCD.

  LAN settings

- Print the network settings.

  Printing Network Settings

Check5 Have you entered the proper password specified for the Wireless Direct?

To check the password specified for the printer, display it using the operation panel of the printer or print out the network setting information of the printer.

- Display on the LCD.

  LAN settings

- Print the network settings.

  Printing Network Settings

Check6 Make sure the printer is not placed too far away from the device.

If the distance between the printer and device is too far, wireless communication becomes poor. Place the printer and device close to each other.

Check7 Make sure 5 devices are already connected.

Wireless Direct does not allow more than 5 devices to be connected.

Printing Problems

- Printer Does Not Print
- Ink Does Not Come Out
- Paper Does Not Feed Properly/"No Paper" Error
- Cannot Print on the Disc Label
- Printout Results Are Unsatisfactory

Q

Printer Does Not Print

A

Check1 Make sure printer is turned on.

If not, make sure the printer is securely plugged in and press **ON** button to turn on.

The **ON** lamp flashes while the printer is initializing. Wait until the **ON** lamp stops flashing and remains lit.

Note

- If you are printing large data such as photos or other graphics, printing may take longer to start. The **ON** lamp flashes while the computer is processing data and sending it to the printer. Wait until printing starts.

Check2 Make sure the paper output tray is pulled out fully.

When you do not use the multi-purpose tray, pull the paper output tray out to the front side until it stops, and then pull the paper output support out.

Next, press the printer's **OK** button to resolve the error.

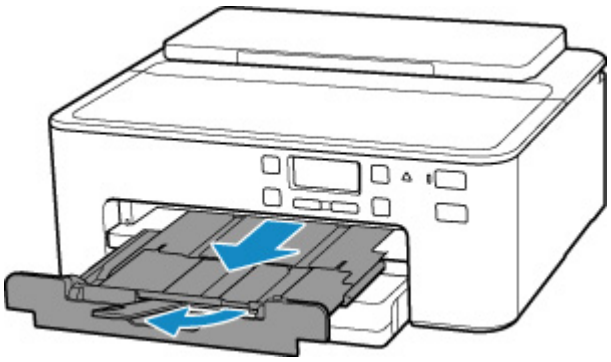

Check3 Make sure printer is properly connected to computer.

If you are using a USB cable, make sure it is securely connected to both the printer and the computer. When the USB cable is securely plugged in, check the following:

- If you are using a relay device such as a USB hub, disconnect it, connect the printer directly to the computer, and retry the printing. If printing starts normally, there is a problem with the relay device. Contact the vendor of the relay device.
- There could also be a problem with the USB cable. Replace the USB cable and retry the printing.

If you use the printer over a LAN, make sure the printer is correctly set up for network use.

- Cannot Find Printer while Using Wi-Fi
- Cannot Find Printer while Using Wired LAN

Note

- IJ Network Device Setup Utility allows you to diagnose and repair the network status.

Select the link below to download IJ Network Device Setup Utility and install it.

- Checking Printer Connection Status Using IJ Network Device Setup Utility

See below for starting up IJ Network Device Setup Utility.

- **For Windows:**
  - Starting Up IJ Network Device Setup Utility
- **For macOS:**
  - Starting Up IJ Network Device Setup Utility

Check4 Make sure paper settings match information set for rear tray or cassette.

If the paper settings do not match the information set for the rear tray or the cassette, an error message appears on the LCD. Follow the instructions on the LCD to solve the problem.

Note

- You can select whether the message which prevents misprinting is displayed.
  - To change the message view setting when printing using the printer's operation panel:
    - Feed settings
  - To change the message view setting when printing using the printer driver:
    - Changing the Printer Operation Mode (Windows)
    - Changing the Printer Operation Mode (macOS)

Check5 If printing from a computer, delete jobs stuck in print queue.

- **For Windows:**
  - Deleting the Undesired Print Job
- **For macOS:**
  - Deleting the Undesired Print Job

Check6 Is your printer's printer driver selected when printing?

The printer will not print properly if you are using a printer driver for a different printer.

- **For Windows:**

  Make sure "Canon XXX series" (where "XXX" is your printer's name) is selected in the Print dialog box.

  ### Note

  - If multiple printers are registered to your computer, select **Set as Default Printer** for a printer to make the one selected by default.

- **For macOS:**

  Make sure your printer's name is selected in **Printer** in the Print dialog.

Note

- If multiple printers are registered to your computer, select **Set as Default Printer** from **System Preferences** > **Printers & Scanners** for a printer to make the one selected by default.

Check7 Are you trying to print a large data file? (Windows)

If you are trying to print a large file, it takes a long time to start printing.

If the printer does not start printing after a certain period of time, select **On** for **Prevention of Print Data Loss** on the **Print Options** dialog box.

For details, refer to Page Setup Tab Description.

Important

- Selecting **On** for **Prevention of Print Data Loss** may reduce print quality.
- After printing is completed, select **Off** for **Prevention of Print Data Loss**.

Check8 If printing from a computer, restart the computer.

Restart the computer and try printing again.

Ink Does Not Come Out

A

Check1 Make sure of the estimated ink levels in the ink tanks.

Check the ink status on the LCD.

- Checking Ink Status on the LCD

Check2 Are the orange tape and plastic wrap still on the ink tank?

Make sure all the protective plastic wrap is peeled off to expose the Y-vent area, as shown below (A).

If the orange tape remains on the ink tank (B), peel it off.

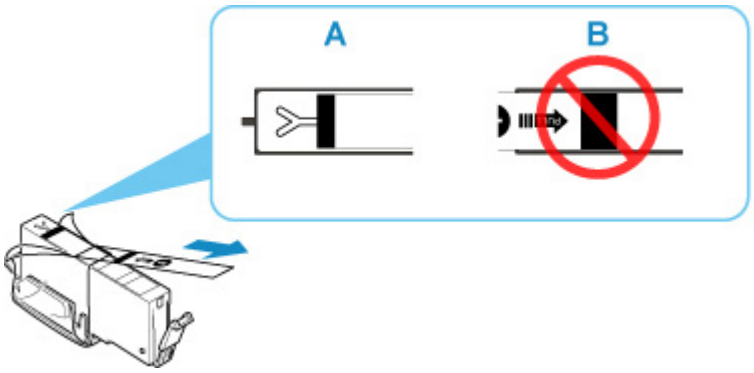

Check3 Are the print head nozzles clogged?

Print the nozzle check pattern to determine whether the ink ejects properly from the print head nozzles.

For details on printing the nozzle check pattern, print head cleaning, and print head deep cleaning, see If Printing Is Faint or Uneven.

- **If nozzle check pattern is not printed correctly:**

  Check if the ink tank for the problem color is empty.

  If the ink tank is not empty, perform print head cleaning and try printing the nozzle check pattern again.

- **If problem is not resolved after performing print head cleaning twice:**

  Perform print head deep cleaning.

  If the problem is not resolved after performing print head deep cleaning, turn off the printer and perform print head deep cleaning again 24 hours later.

- **If problem is not resolved after performing print head deep cleaning twice:**

  If print head deep cleaning does not resolve the problem, the print head may be damaged. Contact your nearest Canon service center to request a repair.

Paper Does Not Feed Properly/"No Paper" Error

A

Check1 Make sure paper is loaded.

- Loading Paper

Check2 When loading paper, consider the following.

- When loading two or more sheets of paper, align the edges of the sheets before loading the paper.
- When loading two or more sheets of paper, make sure the paper stack does not exceed the paper load limit.

  However, paper may not feed correctly at the maximum capacity, depending on the type of paper or environmental conditions (very high or low temperature and humidity). In such cases, reduce the amount of paper you load at a time to less than half of the paper load limit.
- Always load the paper in portrait orientation, regardless of the printing orientation.
- When you load the paper on the rear tray, place the print side facing UP and align the right and left paper guides with the paper stack.

  - Loading Paper
- In the cassette, be sure to load only plain paper.
- When you load the paper on the cassette, place the print side facing DOWN and align the right/left/front paper guides with the paper stack.

  - Loading Paper

Check3 Is paper too thick or curled?

- Unsupported Media Types

Check4 When loading envelopes, consider the following.

When printing on envelopes, see Loading Envelopes in Rear Tray, and prepare the envelopes before printing.

Once you have prepared the envelopes, load them in portrait orientation. If the envelopes are placed in landscape orientation, they will not feed properly.

Check5 Make sure media type and paper size settings match with loaded paper.

Check6 Make sure that there are not any foreign objects in the rear tray.

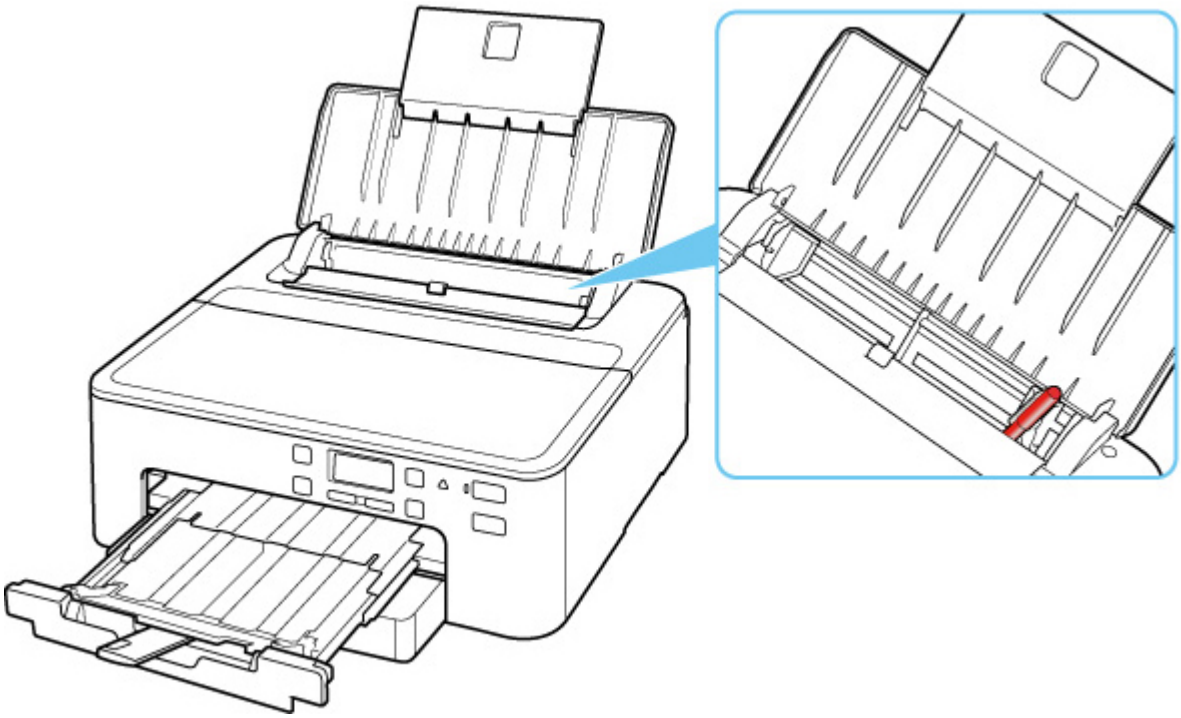

If the paper tears in the rear tray, see List of Support Code for Error (Paper Jams) to remove it.

If there are any foreign objects in the rear tray, be sure to turn off the printer, unplug it from the power supply, then remove the foreign object.

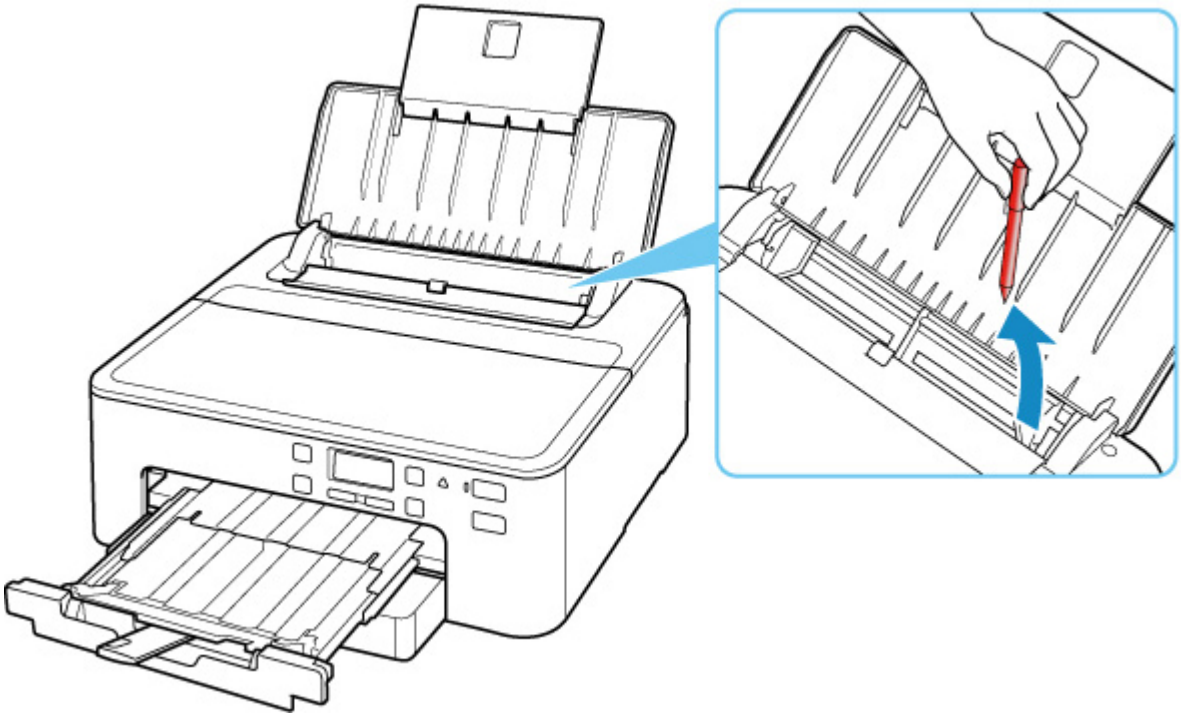

Note

- If the feed slot cover is opened, close it slowly.

Check7 Clean paper feed roller.

Cleaning Paper Feed Rollers

Note

- Cleaning the paper feed roller abrades it, so do this only when necessary.

Check8 If two or more sheets of paper feed from cassette at once, clean inside of cassette.

Cleaning Cassette Pads

Check9 Are transport unit cover and rear cover attached properly?

See Rear View for the positions of the transport unit cover and the rear cover.

If the measures above do not solve the problem, contact your nearest Canon service center to request a repair.

Cannot Print on the Disc Label

- Disc Label Printing Does Not Start
- Multi-Purpose Tray Does Not Feed Properly
- Multi-Purpose Tray Jammed

Q Disc Label Printing Does Not Start

A

Check1 Is multi-purpose tray placed properly?

Place the multi-purpose tray properly again and press the printer's **OK** button.

Use the multi-purpose tray supplied with this printer.

For more on placing the multi-purpose tray, see Placing a Printable Disc.

Check2 Is printable disc placed on multi-purpose tray?

Place the printable disc on the multi-purpose tray properly and press the printer's **OK** button.

Use the multi-purpose tray supplied with this printer.

For more on placing the multi-purpose tray, see Placing a Printable Disc.

Check3 Has time elapsed since you placed the multi-purpose tray?

If a certain period of time has elapsed since you placed the multi-purpose tray, it may be ejected.

Follow the instructions on the LCD and try the operation again.

Q Multi-Purpose Tray Does Not Feed Properly

A

Check1 Is multi-purpose tray placed properly?

Place the multi-purpose tray properly again and press the printer's **OK** button.

Use the multi-purpose tray supplied with this printer.

For more on placing the multi-purpose tray, see Placing a Printable Disc.

Check2 Unrecognizable printable disc may be placed.

Canon recommends that you use printable discs specially processed to be printed on by an inkjet printer.

Q Multi-Purpose Tray Jammed

A

Pull out the multi-purpose tray gently.

If the multi-purpose tray cannot be pulled out, cycle the power switch. The multi-purpose tray will automatically be ejected.

When the multi-purpose tray is pulled out, place the multi-purpose tray again and retry printing. For more on placing the multi-purpose tray, see Placing a Printable Disc.

If the multi-purpose tray is still jammed, check if there is a problem with the printable disc.

- Multi-Purpose Tray Does Not Feed Properly

Q

Printout Results Are Unsatisfactory

A

If the print results are unsatisfactory due to white streaks, misaligned/distorted lines, or uneven colors, check the paper and print quality settings first.

Check1 Do page size and media type settings match size and type of loaded paper?

If these settings do not match, it is not possible to obtain the proper result.

If you are printing a photograph or an illustration, an incorrect paper type setting may reduce the quality of the printout color.

Also, if you print with an incorrect paper type setting, the printed surface may be scratched.

In borderless printing, uneven coloring may occur depending on the combination of the paper type setting and the loaded paper.

The method for checking the paper and print quality settings differs depending on what you are using your printer for.

- **Printing from your computer**

  Check the settings using the printer driver.

  - Basic Printing Setup

- **Printing from a PictBridge (Wi-Fi) compliant device**

  Check the settings on your PictBridge (Wi-Fi) compliant device or using the operation panel.

  - PictBridge (Wi-Fi) Print Settings
  - PictBridge settings

- **Printing from your smartphone/tablet using Canon PRINT Inkjet/SELPHY**

  Check the settings on Canon PRINT Inkjet/SELPHY.

  - Print Photos Quickly from Smartphone

Check2 Make sure appropriate print quality is selected (see list above).

Select a print quality suited to the paper and to what you are printing. If you notice blurs or uneven colors, increase the print quality setting and retry the printing.

Note

- When printing from a PictBridge (Wi-Fi) compliant device, set the print quality setting using the operation panel.

  This setting cannot be made on the PictBridge (Wi-Fi) compliant device.

Check3 If problem is not resolved, check also the sections below.

See also the sections below:

- Printouts Are Blank/Blurry or Fuzzy/Inaccurate or Bleeding Colors/Streaks or Lines
- Lines Are Misaligned/Distorted
- Paper Is Smudged / Printed Surface Is Scratched
- Vertical Line Next to Image
- Cannot Complete Printing
- Part of Page Is Not Printed (Windows)
- Lines Incomplete or Missing (Windows)
- Images Incomplete or Missing (Windows)
- Ink Blots / Paper Curl
- Back of Paper Is Smudged
- Uneven or Streaked Colors

Q

Printouts Are Blank/Blurry or Fuzzy/Inaccurate or Bleeding Colors/ Streaks or Lines

Printing Is Blurry

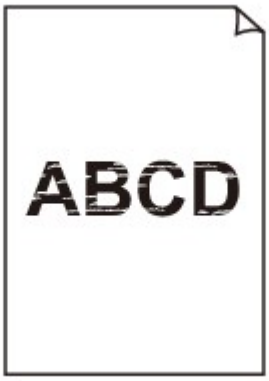

Colors Are Wrong

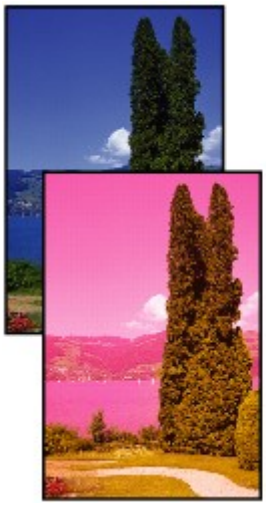

White Streaks Appear

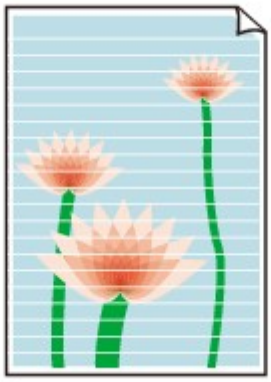

A

Check1 Check paper and print quality settings.

- Printout Results Are Unsatisfactory

Check2 Check status of ink tanks. Replace ink tank if ink has run out.

- Replacing Ink Tanks

Check3 Are the orange tape and plastic wrap still on the ink tank?

Make sure all the protective plastic wrap is peeled off to expose the Y-vent area, as shown below (A).

If the orange tape remains on the ink tank (B), peel it off.

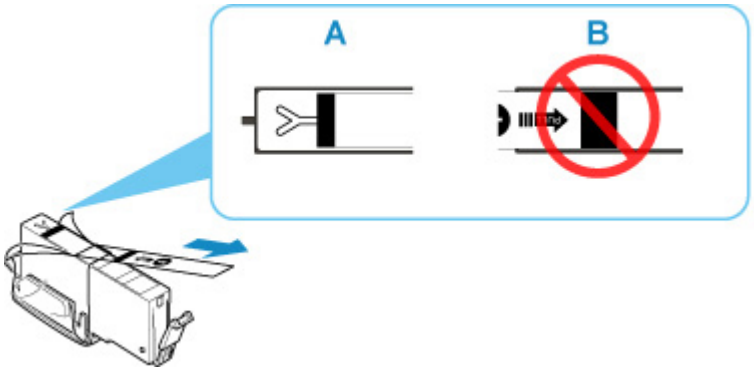

Check4 Are the print head nozzles clogged?

Print the nozzle check pattern to determine whether the ink ejects properly from the print head nozzles.

For details on printing the nozzle check pattern, print head cleaning, and print head deep cleaning, see If Printing Is Faint or Uneven.

- **If nozzle check pattern is not printed correctly:**

  Check if the ink tank for the problem color is empty.

  If the ink tank is not empty, perform print head cleaning and try printing the nozzle check pattern again.

- **If problem is not resolved after performing print head cleaning twice:**

  Perform print head deep cleaning.

  If the problem is not resolved after performing print head deep cleaning, turn off the printer and perform print head deep cleaning again 24 hours later.

- **If problem is not resolved after performing print head deep cleaning twice:**

  If print head deep cleaning does not resolve the problem, the print head may be damaged. Contact your nearest Canon service center to request a repair.

Check5 When using paper with one printable surface, check the correct printable side of the paper.

Printing on the wrong side of such paper may cause unclear prints or prints with reduced quality.

When you load paper on the rear tray, load paper with the printable side facing up. When you load paper in the cassette, load paper with the printable side facing down.

Refer to the instruction manual supplied with the paper for detailed information on the printable side.

Lines Are Misaligned/Distorted

Check1 Check paper and print quality settings.

- Printout Results Are Unsatisfactory

Check2 Perform print head alignment.

If printed lines are misaligned/distorted or print results are otherwise unsatisfactory, adjust the print head position.

- Aligning the Print Head

Note

- If the problem is not resolved after performing the print head alignment, perform print head alignment manually from your computer.
  - **For Windows:**
    - Adjusting Print Head Position Manually
  - **For macOS:**
    - Adjusting Print Head Position

Check3 Increase print quality and try printing again.

Increasing the print quality may improve the print result.

Q

Paper Is Smudged / Printed Surface Is Scratched

Paper Is Smudged

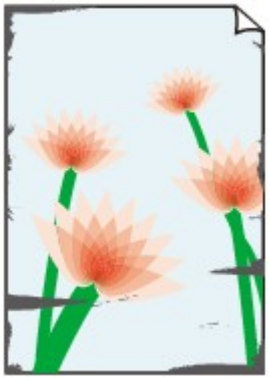

Smudged Edges

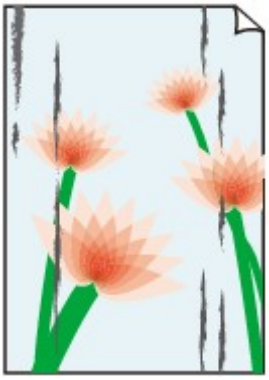

Smudged Surface

Printed Surface Is Scratched

A

Check1 Check paper and print quality settings.

- Printout Results Are Unsatisfactory

Check2 Check paper type.

Make sure you are using the right paper for what you are printing.

- Supported Media Types

Check3 Correct curl before loading paper.

When using Photo Paper Plus Semi-gloss, even if the sheet is curled, load one sheet at a time as it is. Rolling this paper in the opposite direction to flatten it may crack the paper surface and reduce the print quality.

We recommend putting unused paper back into the package and storing it flat.

- **Plain Paper**

  Turn the paper over and reload it to print on the other side.

- **Other Paper such as envelope**

  If the paper corners curl more than 0.1 in. / 3 mm (A) in height, the paper may smudge or may not feed properly. Follow the instructions below to correct the paper curl.

1. Roll up paper in opposite direction to paper curl as shown below.

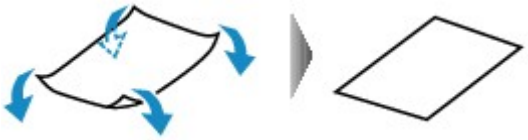

2. Check that paper is now flat.

   We recommend printing curl-corrected paper one sheet at a time.

Note

- Depending on paper type, the paper may smudge or may not feed properly even if it is not curled inward. Follow the instructions below to curl the paper outward up to 0.1 in. / 3 mm (C) in height before printing. This may improve the print result.

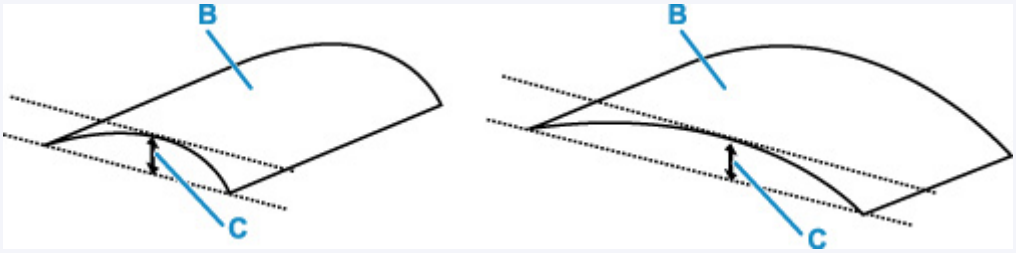

(B) Print side

We recommend feeding paper that has been curled outward one sheet at a time.

Check4 Set printer to prevent paper abrasion.

Adjusting the setting to prevent paper abrasion will widen the clearance between the print head and the paper. If you notice abrasion even with the media type set correctly to match the paper, set the printer to prevent paper abrasion using the operation panel or the computer.

This may reduce the print speed.

* Once you have finished printing, undo this setting. Otherwise, it will apply to subsequent print jobs.

- **From operation panel:**

  Press the **Setup** button and select **Device settings** > **Print settings** in this order, and then set **Prevent abrasion** to **ON**.

  Changing Settings from Operation Panel

- **From computer (Windows):**

  1. Check that printer is turned on.

2. Open Canon IJ Printer Assistant Tool.

   Opening the Maintenance Tool (Canon IJ Printer Assistant Tool)

3. Select **Custom Settings**.

4. Select **Prevents paper abrasion** check box and select **OK**.

5. Check message and select **OK**.

- **From computer (macOS):**

  Adjust the setting to prevent paper abrasion from Remote UI.

  Opening Remote UI for Maintenance

Check5 If brightness is set low, increase brightness setting and try printing again.

If you are printing with a low brightness setting on plain paper, the paper may absorb too much ink and become wavy, causing paper abrasion.

Adjusting Brightness

Check6 Is paper feed roller dirty?

Clean paper feed roller.

Cleaning Paper Feed Rollers

Note

- Cleaning the paper feed roller abrades it, so do this only when necessary.

Check7 Is inside of printer dirty?

During duplex printing, ink may stain the inside of the printer, smudging the printout.

Perform bottom plate cleaning to clean inside of printer.

Cleaning Inside the Printer (Bottom Plate Cleaning)

Note

- To prevent staining inside the printer, be sure to set the correct paper size.

Check8 Set longer ink drying time.

This allows the printed surface to dry, preventing smudges and scratches.

- **For Windows:**

  1. Check that printer is turned on.

  2. Open Canon IJ Printer Assistant Tool.

     Opening the Maintenance Tool (Canon IJ Printer Assistant Tool)

3. Select **Custom Settings**.

4. Drag **Ink Drying Wait Time** slide bar to set the wait time and select **OK**.

5. Check message and select **OK**.

- **For macOS:**

  Set the waiting time using Remote UI.

  Opening Remote UI for Maintenance

Vertical Line Next to Image

Check Is loaded paper size correct?

If the loaded paper is larger than the size you specified, a vertical line may appear in the margin.

Set the paper size to match the loaded paper.

Printout Results Are Unsatisfactory

Note

- The direction of the vertical line pattern may vary depending on the image data or the print setting.
- This printer performs automatic cleaning when necessary to keep printouts clean. A small amount of ink is ejected for cleaning.

  Although the ink is normally ejected onto the ink absorber at the outer edge of the paper, it may get onto the paper if the loaded paper is larger than the set size.

Mechanical Problems

- Printer Does Not Turn On
- Printer Turns Off Unexpectedly or Repeatedly
- USB Connection Problems
- Cannot Communicate with Printer via USB
- Wrong Language Appears in LCD

Q

Printer Does Not Turn On

A

Check1 Press **ON** button.

Check2 Make sure power plug is securely connected to printer, and then turn on again.

Check3 Unplug printer, leave it for at least 2 minutes, and then plug it back in and turn on again.

If this does not solve the problem, contact your nearest Canon service center to request a repair.

Q

Printer Turns Off Unexpectedly or Repeatedly

A

Check If printer is set to turn off automatically after a certain time, disable this setting.

If you have set the printer to turn off automatically after a specified time, the power will shut off by itself once that time has elapsed.

- **To disable the setting from the operation panel:**

  1. Check that printer is turned on.
  2. Press the **Setup** button, use the ◄ ► button to select **ECO settings**, and press the **OK** button.

     LCD and Operation Panel
  3. Make sure **EnergySaveSettings** is displayed, and then press the **OK** button.
  4. Use the ◄ ► button to select **Auto power off** and then press the **OK** button.
  5. Use the ◄ ► button to select **OFF** and then press the **OK** button.

     The setting to shut off the power automatically is disabled.

- **To disable the setting from the computer:**

  For Windows, use Canon IJ Printer Assistant Tool to disable the setting.

  Follow the procedure below to disable the setting using Canon IJ Printer Assistant Tool.

  1. Open Canon IJ Printer Assistant Tool.

     Opening the Maintenance Tool (Canon IJ Printer Assistant Tool)
  2. Select **Auto Power**.
  3. Select **Disable** for **Auto Power Off**.
  4. Select **OK**.
  5. Select **OK** on the displayed screen.

     The setting to shut off the power automatically is disabled.

USB Connection Problems

Make sure of the checking item below when you find one of the followings.

- Printing is slow.
- Hi-Speed USB connection does not work.
- A message such as "**This device can perform faster**" appears. (Windows)

Note

- If your system environment does not support Hi-Speed USB, the printer operates at the slower speed of USB 1.1. In this case, the printer works properly but printing speed may slow down due to the communication speed.

Check Check following to make sure your system environment supports Hi-Speed USB connection.

- Does the USB port on your computer support Hi-Speed USB connection?
- Does the USB cable or the USB hub support Hi-Speed USB connection?

  Be sure to use a certified Hi-Speed USB cable. We recommend that the USB cable be no longer than 10 feet / 3 meters or so.
- Is the Hi-Speed USB driver working properly on your computer?

  Make sure the latest Hi-Speed USB driver is working properly and obtain and install the latest version of the Hi-Speed USB driver for your computer, if necessary.

Important

- For more information, contact the manufacturer of your computer, USB cable, or USB hub.

Q

Cannot Communicate with Printer via USB

A

Check1 Make sure printer is turned on.

Check2 Connect USB cable properly.

As the illustration below, the USB port is at the back of the printer.

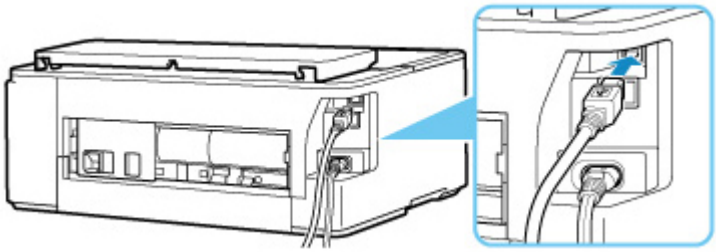

Important

- Connect the "Type-B" terminal to the printer with the notched side facing UP. For details, refer to the instruction manual supplied with the USB cable.

Check3 Make sure **Enable bidirectional support** is selected in the **Ports** sheet of the **Printer properties** dialog box. (Windows)

If not, select it to enable bidirectional support.

Opening Printer Driver's Setup Screen

Wrong Language Appears in LCD

Follow the instructions below to select your language.

1. Press **Setup** button and wait a little.
2. Press ► button once and press **OK** button.
3. Press ► button 5 times and press **OK** button.
4. Use ◄► button to select language for LCD and press **OK** button.

   The desired language appears on the LCD.
5. Press **Stop** button.

Installation and Download Problems

- Failed to Printer Driver Installation (Windows)
- Updating Printer Driver in Network Environment (Windows)

Failed to Printer Driver Installation (Windows)

- If installation does not start when you insert Setup CD-ROM:
- If you cannot get past the Printer Connection screen:
- Other cases:

If installation does not start when you insert Setup CD-ROM:

Follow the instructions below to start the installation.

1. Make the following settings.
   - In Windows 10, click **Start** > **File Explorer**, and then click **This PC** from list on left.
   - In Windows 8.1, select **Explorer** icon in **Taskbar** on **Desktop**, and then select **This PC** from list on left.
   - In Windows 7, click **Start**, and then click **Computer**.
2. Double-click the CD-ROM icon in the window that appears.

   If the contents of the CD-ROM appear, double-click **Msetup4.exe**.

   If you cannot install the printer driver with the Setup CD-ROM, install it from the Canon website.

Note

- If the CD-ROM icon does not appear, try the following:
  - Remove the CD-ROM from your computer and reinsert it.
  - Restart your computer.

  If the icon still does not appear, try a different disc and see if it appears. If it does, there is a problem with the Setup CD-ROM. Contact your nearest Canon service center to request a repair.

If you cannot get past the Printer Connection screen:

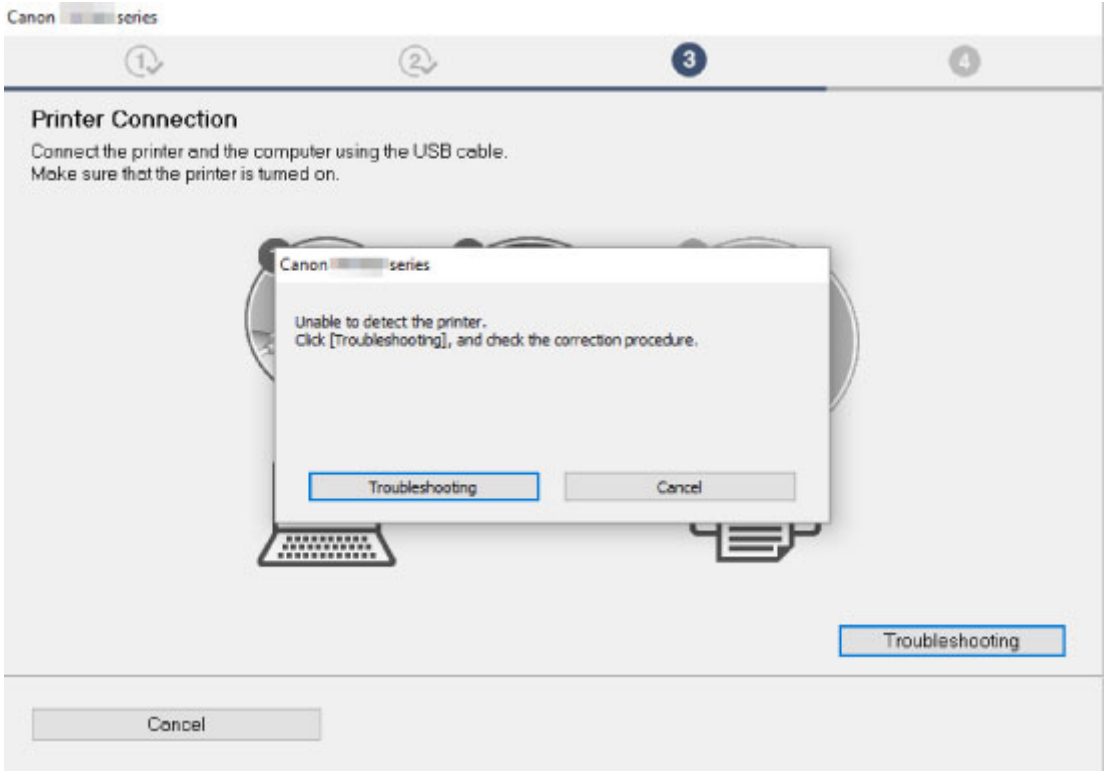

- Cannot Proceed beyond Printer Connection Screen

Other cases:

If the printer driver was not installed correctly, uninstall the printer driver, restart your computer, and then reinstall the printer driver.

- Deleting the Unnecessary Printer Driver

Reinstall the printer driver with the Setup CD-ROM or install it from the Canon website.

Note

- If the installer was stopped due to a Windows error, Windows operation may be unstable, and you may not be able to install the drivers. Restart your computer and then reinstall the drivers.

Updating Printer Driver in Network Environment (Windows)

Download the latest printer driver.

Download the latest printer driver for your model on the download page of the Canon website.

Uninstall the existing printer driver and follow the installation instructions to install the latest printer driver that you downloaded. In the connection method selection screen, select **Use the printer with Wi-Fi connection** or **Use the printer with wired LAN connection** according to the connection method you use. The printer is detected automatically in the network.

Make sure the printer was found, and install the printer driver following the on-screen instructions.

Note

- The network settings on the printer are not affected, so the printer can be used on the network without redoing settings.

Errors and Messages

- Four-Digit Alphanumeric Characters Appear on LCD
- When Error Occurred
- Message (Support Code) Appears

Four-Digit Alphanumeric Characters Appear on LCD

A message appears on the LCD or your computer screen.

Depending on an error or message, four-digit alphanumeric characters appear. The characters represent a "support code" (error number).

For details on each support code, see List of Support Code for Error.

When Error Occurred

If an error occurs in printing, for example if the paper runs out or jams, a troubleshooting message appears automatically. Take the appropriate action described in the message.

When an error occurs, a message appears on the computer, or an error code appears on the printer. For some errors, a support code (error number) appears on the computer screen.

When a Support Code and a message are displayed on the computer screen (Windows):

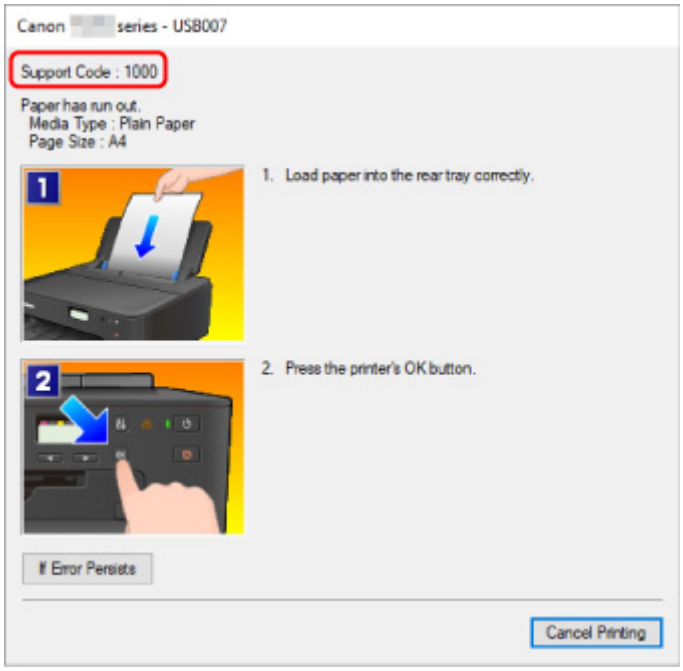

When a Support Code and a message are displayed on the printer (LCD):

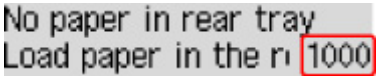

For details on how to resolve errors, see List of Support Code for Error.

Note

- For details on how to resolve errors without Support Codes, see Message (Support Code) Appears.

Message (Support Code) Appears

This section describes some of the errors and messages that may appear.

Note

- A support code (error number) is displayed on the computer for some errors. For details on errors that have support code, see List of Support Code for Error.

If a message appears on the LCD, see below.

- Message Appears on LCD

If a message appears on the computer, see below.

- Error Regarding Automatic Duplex Printing Is Displayed
- Error Regarding Power Cord Being Unplugged Is Displayed (Windows)
- Writing Error/Output Error/Communication Error (Windows)
- Other Error Messages (Windows)

Q Message Appears on LCD

A

Check the message and take an appropriate action.

- **Power was not turned off correctly the last time. Press the ⏻ button when turning power off.**

  The printer may have been unplugged while the power was still on.

  Press the **OK** button to dismiss the error.

  Note

  - See Unplugging the Printer to unplug the printer correctly.

- **Cannot connect to the server. Please wait a while and try again.**

  The printer cannot connect to the server due to a communication error.

  Press the **OK** button to dismiss the error and try again after a while.

Q Error Regarding Automatic Duplex Printing Is Displayed

A

Check See Automatic Duplex Printing Problems and take the appropriate action.

Q Error Regarding Power Cord Being Unplugged Is Displayed (Windows)

A

The printer may have been unplugged while it was on.

Check the error message that appears on the computer and click **OK**.

The printer starts printing.

See Unplugging the Printer for unplugging the power cord.

Q Writing Error/Output Error/Communication Error (Windows)

A

Check1 If the **ON** lamp is off, make sure printer is plugged in and turn on.

The **ON** lamp flashes while the printer is initializing. Wait until the **ON** lamp stops flashing and remains lit.

Check2 Make sure printer is properly connected to computer.

If you are using a USB cable, make sure it is securely connected to both the printer and the computer. When the USB cable is securely plugged in, check the following:

- If you are using a relay device such as a USB hub, disconnect it, connect the printer directly to the computer, and retry the printing. If printing starts normally, there is a problem with the relay device. Contact the vendor of the relay device.
- There could also be a problem with the USB cable. Replace the USB cable and retry the printing.

If you use the printer over a LAN, make sure the printer is correctly set up for network use.

Check3 Make sure printer driver is installed correctly.

Uninstall the printer driver following the procedure described in Deleting the Unnecessary Printer Driver and reinstall it from the Setup CD-ROM or the Canon website.

Check4 When printer is connected to your computer with a USB cable, check device status from your computer.

Follow the procedure below to check the device status.

1. Select **Control Panel** > **Programs** > **Programs and Features**.

   Note

   - If the **User Account Control** screen appears, select **Continue**.

2. Double-click **Universal Serial Bus controllers** and **USB Printing Support**.

If **USB Printing Support Properties** screen does not appear, make sure the printer is correctly connected to the computer.

Check2 Make sure printer is properly connected to computer.

3. Click **General** tab and check for a device problem.

   If a device error is shown, see Windows Help to resolve it.

Q Other Error Messages (Windows)

A

Check If an error message appears outside printer status monitor, check the following:

- "**Could not spool successfully due to insufficient disk space**"

  Delete any unnecessary files to increase the amount of free space on the disk.

- "**Could not spool successfully due to insufficient memory**"

  Close other applications to increase the available memory.

  If you still cannot print, restart your computer and retry the printing.

- "**Printer driver could not be found**"

  Uninstall the printer driver following the procedure described in Deleting the Unnecessary Printer Driver and reinstall it from the Setup CD-ROM or the Canon website.

- "**Could not print Application name** - File name"

  Try printing again once the current job is complete.

List of Support Code for Error

Support code appears on the LCD and your computer screen when errors occur.

A "support code" is an error number, and appears along with an error message.

When an error occurs, check the support code displayed on the LCD and computer screen and take the appropriate action in response.

Support Code Appears on LCD and Computer Screen

- **1000 to 1ZZZ**

  1000 1001 1002 1003 1013 1200

  1259 1270 1300 1303 1304 1309

  1310 1313 1401 1403 1405 140B

  1410 1411 1412 1413 1414 15A1

  15A2 1551 1552 1600 1660 1684

  1688 1689 168C 1700 1701 1730

  1731 1830 1850 1851 1855 1857

  1871 1874 1890

- **2000 to 2ZZZ**

  2110 2113 2114 2120 2123 2500

- **3000 to 3ZZZ**

  3413 3439 3440 3441 3442 3443

  3444 3445 3446 3447

- **4000 to 4ZZZ**

  4100 4103 4104 495A

- **5000 to 5ZZZ**

  5100 5200 520E 5400 5700 5B00

  5B01 5C02

- **6000 to 6ZZZ**

  6000 6001 6004 6500 6502 6800

6801 6830 6831 6832 6833 6900

6901 6902 6910 6911 6920 6921

6930 6931 6932 6933 6940 6941

6942 6943 6944 6945 6946 6951

6A80 6A81 6D01

- **7000 to 7ZZZ**

  7500 7600 7700 7800

- **8000 to 8ZZZ**

  8300

- **A000 to ZZZZ**

  C000

For paper jam support codes, see also List of Support Code for Error (Paper Jams).

List of Support Code for Error (Paper Jams)

If paper jams, remove it following the appropriate procedure as shown below.

- If you can see the jammed paper at the paper output slot or the rear tray:

  1300

- If you cannot see the jammed paper at the paper output slot or the rear tray:
  - If the paper fed from the cassette is jammed:

    1303

  - If the paper is jammed when performing automatic duplex printing:

    1304

  - If the paper is jammed as the printer pulled in the printed paper:

    1313

  - If the paper tears and you cannot remove it from the paper output slot or if the paper is jammed inside the printer:

    Paper Is Jammed inside Printer

- Cases other than above:

  Other Cases

1300

Cause

Paper is jammed when feeding paper from rear tray.

What to Do

If the paper fed from the rear tray is jammed, remove the jammed paper from the paper output slot or from the rear tray following the instructions below.

1. Slowly pull out paper, either from paper output slot or from rear tray, whichever is easier.

   Hold the paper with both hands, and pull it out slowly so as not to tear it.

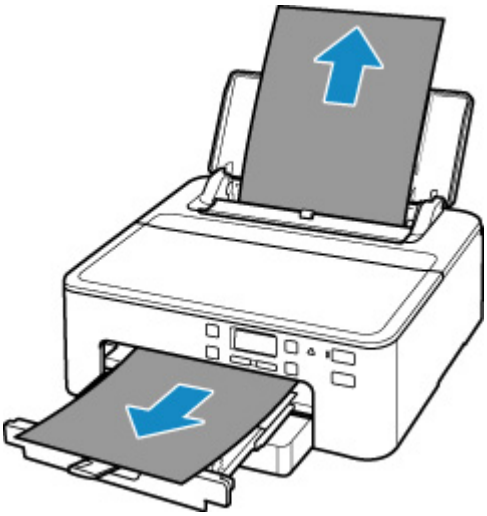

Note

- If you cannot pull out the paper, turn the printer back on without pulling forcibly. The paper may be ejected automatically.
- If paper becomes jammed during printing and you need to turn off the printer to remove it, press the **Stop** button to stop the printing before you turn off the printer.
- If the paper tears and you cannot remove the jammed paper from the paper output slot or the rear tray, remove the paper from inside the printer.

  Paper Is Jammed inside Printer

- If you cannot pull the paper out from the paper output slot or from the rear tray, try to pull the paper out from the rear side of the printer.

  Removing Jammed Paper from Rear Side

2. Reload paper and press printer's **OK** button.

   The printer resumes printing. Reprint the page you were printing if it was not printed properly due to the paper jam.

If you turned off the printer in step 1, the print data that was sent to the printer is erased. Redo the printing.

Note

- When reloading the paper, make sure you are using suitable paper and loading it correctly.
- We recommend using paper sizes other than A5 to print documents with photos or graphics. A5 paper may curl and jam as it leaves the printer.

If the measures above do not solve the problem, contact your nearest Canon service center to request a repair.

1303

Cause

Paper is jammed when feeding paper from cassette.

What to Do

1. Remove jammed paper.

   - If the paper is jammed at the paper output slot:

     1300

   - If the paper is jammed inside the printer:

     Paper Is Jammed inside Printer

   - If the paper is jammed at the feeder of the cassette:

     Pull out the cassette, and then remove the paper slowly with both hands.

   - If none of the above is applied, see Removing Jammed Paper from Rear Side to open the rear cover and to remove the paper.

2. Load paper in cassette properly.

   Loading Paper in the Cassette

3. Perform printing again.

1304

Cause

Paper is jammed when performing automatic duplex printing.

What to Do

1. Remove jammed paper.
   - If the paper is jammed at the paper output slot:

     1300
   - If the paper is jammed inside the printer:

     Paper Is Jammed inside Printer
   - If the paper is jammed at the feeder of the cassette:

     Pull out the cassette, and then remove the paper slowly with both hands.

   - If none of the above is applied, see Removing Jammed Paper from Rear Side to open the rear cover and to remove the paper.
2. Load paper properly.

   Loading Paper in the Cassette

   Loading Paper in the Rear Tray
3. Perform printing again.

1313

Cause

Paper is jammed as printer pulled in printed paper.

What to Do

If the paper is jammed as the printer pulled in the printed paper, try to remove the paper from the following locations.

- Paper output slot

  1300

- Inside of the printer

  Paper Is Jammed inside Printer

- Rear side

  Removing Jammed Paper from Rear Side

Paper Is Jammed inside Printer

If the jammed paper tears and you cannot remove the paper from the paper output slot, or if the jammed paper remains inside the printer, remove the paper following the instructions below.

Note

- If paper becomes jammed during printing and you need to turn off the printer to remove it, press the **Stop** button to stop the printing before you turn off the printer.

1. Turn off printer and unplug it.

2. Open top cover.

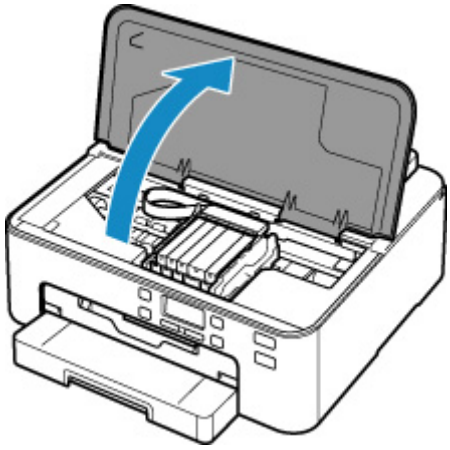

Important

- Do not touch white belt (A).

If you soil or scratch this part by touching it with paper or your hand, it could damage the printer.

3. Check if jammed paper is under print head holder.

If the jammed paper is under the print head holder, move the print head holder to the far right or left, whichever makes it easier to remove the paper.

When moving the print head holder, hold the top of the print head holder and slide it slowly to the far right or left.

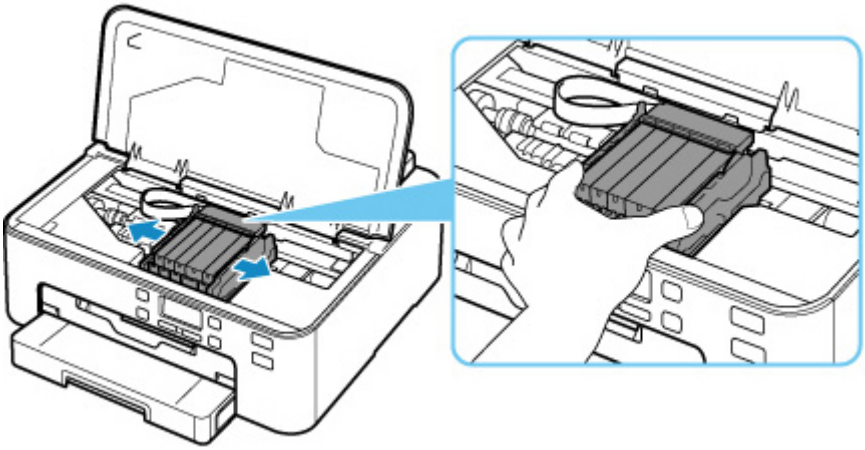

4. Hold jammed paper firmly in both hands.

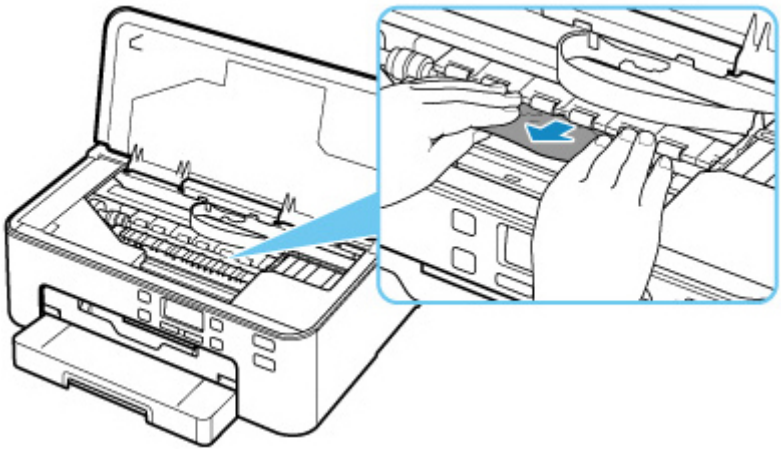

If the paper is rolled up, pull out it.

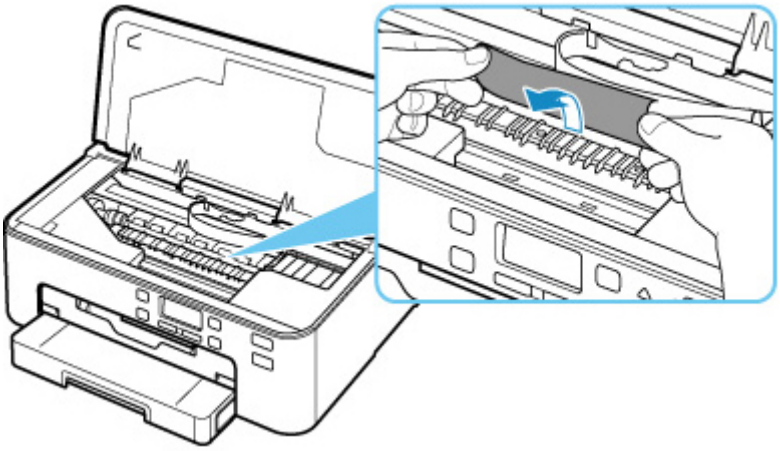

5. Slowly pull out paper, so as not to tear it.

Pull out the paper at an angle of about 45 degrees.

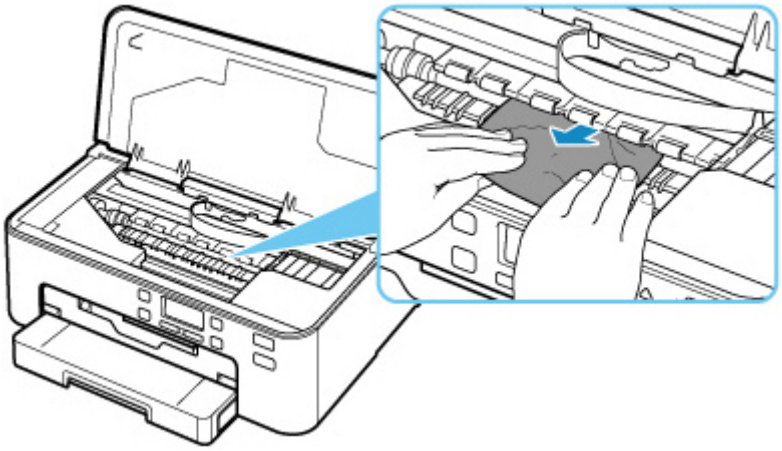

6. Make sure all jammed paper is removed.

   If the paper tears when you pull out it, a bit of paper may remain in the printer. Check the following and remove any remaining paper.

   - Any paper left under the print head holder?
   - Any small bits of paper left in the printer?
   - Any paper left in the left and right empty spaces (B) in the printer?

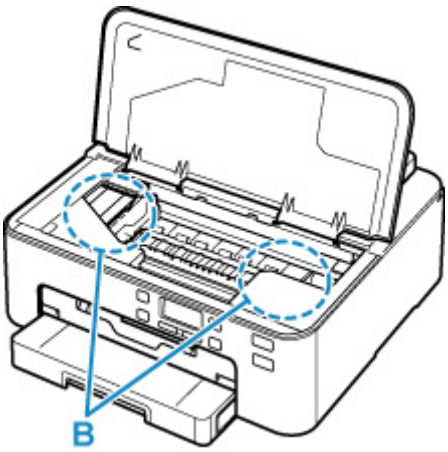

7. Close top cover.

   All jobs in the print queue are canceled. Redo the printing.

   Note

   - When reloading the paper, make sure you are using suitable paper and loading it correctly. If a paper jam message appears on the LCD or on your computer screen when you resume printing after removing all the jammed paper, there may be some paper still inside the printer. Check the printer again for any remaining bits of paper.

If the measures above do not solve the problem, contact your nearest Canon service center to request a repair.

Removing Jammed Paper from Rear Side

Note

- If paper becomes jammed during printing and you need to turn off the printer to remove it, press the **Stop** button to stop the printing before you turn off the printer.

1. Make sure you have unplugged the power cord.

2. Rotate printer so that rear side of printer faces toward you.

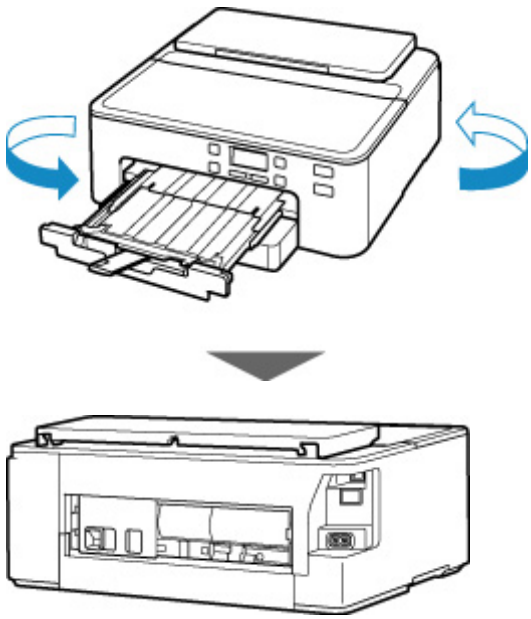

3. Detach rear cover.

   Pull out the rear cover.

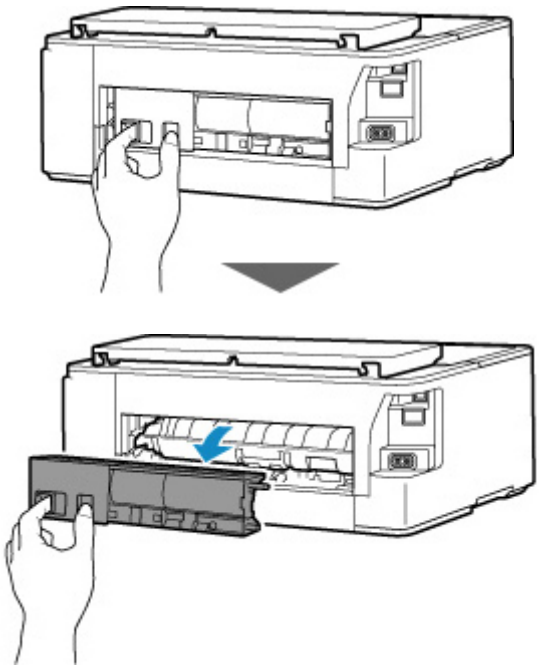

4. Slowly pull out paper.

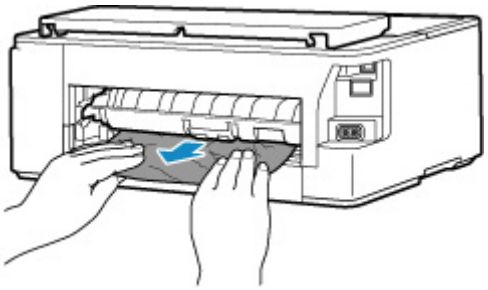

Note

- Do not touch the inner parts of the printer.

If you were not able to remove the paper in this step, detach the transport unit cover and remove the paper by following these steps.

1. Detach transport unit cover.

   Lift up the transport unit cover and pull out it.

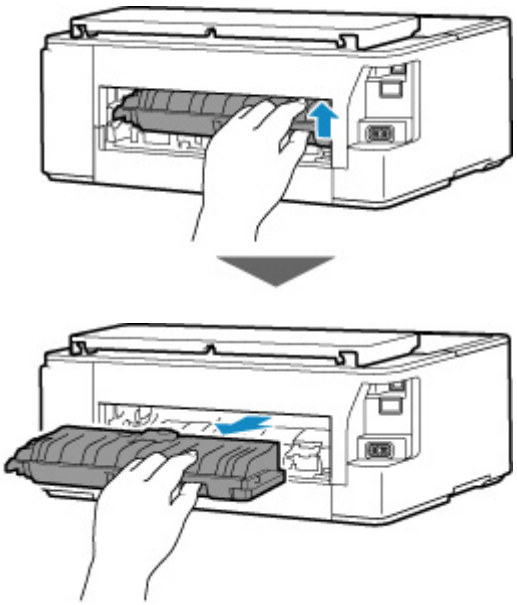

2. Slowly pull out paper.

Note

- Do not touch the inner parts of the printer.

3. Make sure all jammed paper is removed.

4. Attach transport unit cover.

Insert the transport unit cover slowly all the way into printer and take down the transport unit cover.

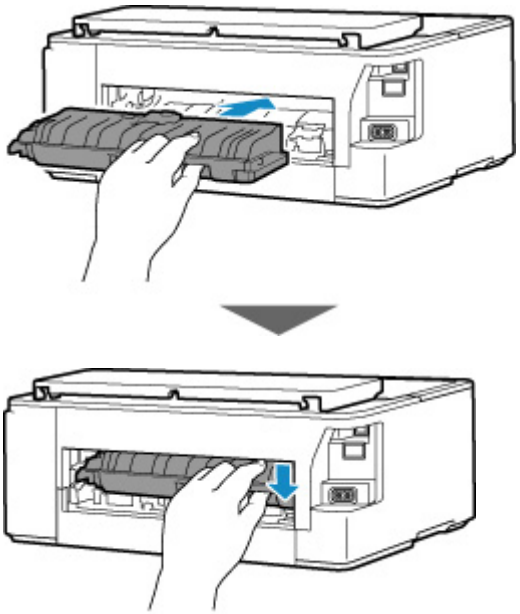

5. Attach rear cover.

Insert the projections of the right side of the rear cover into the printer, and then push the left side of the rear cover until it is closed completely.

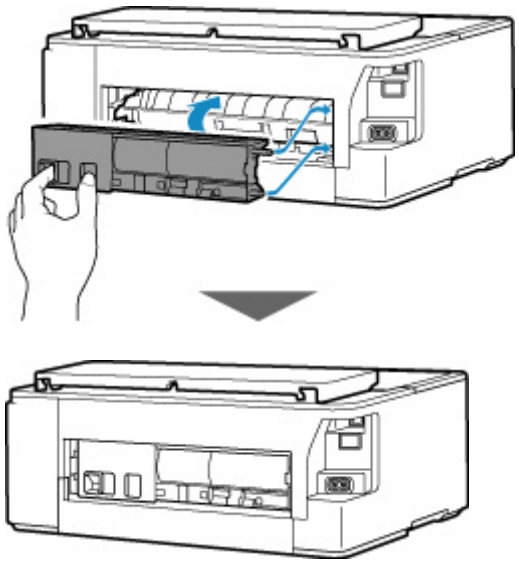

The print data that was sent to the printer is erased. Redo the printing.

Note

- When reloading the paper, make sure you are using suitable paper and loading it correctly.

If the measures above do not solve the problem, contact your nearest Canon service center to request a repair.

1000

Cause

Possible causes include the following.

- There is no paper in the rear tray.
- Paper is not loaded in the rear tray properly.

What to Do

Take the corresponding actions below.

- Load paper in the rear tray.
  Loading Paper in the Rear Tray
- Align the paper guides with the both edges of the paper when you load paper in the rear tray.

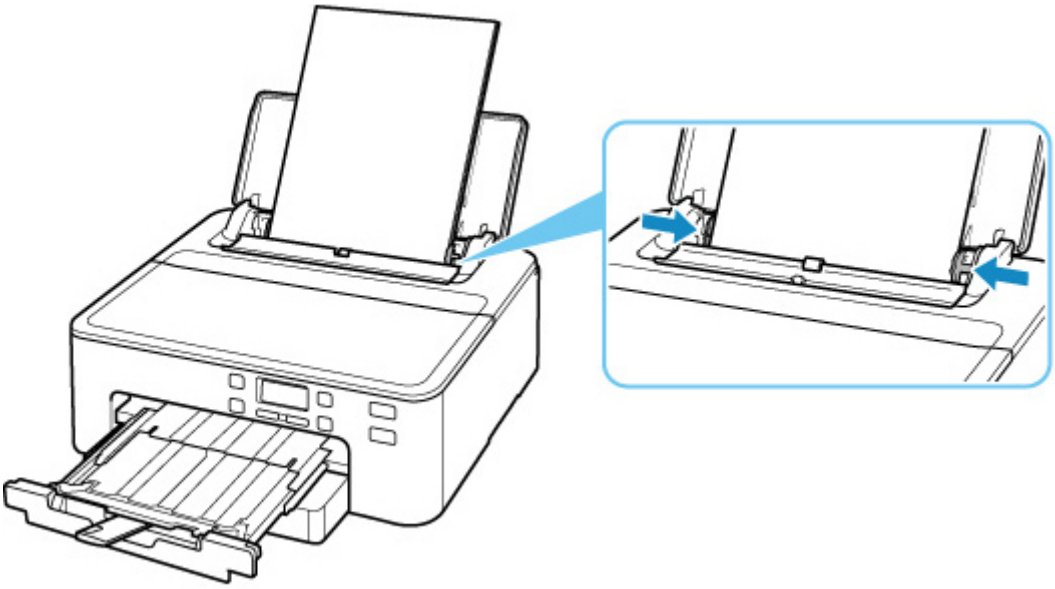

- Set paper information for the paper in the rear tray.

After carrying out the above measures, press the printer's **OK** button.

Important

- Be sure to close the feed slot cover after loading paper in the rear tray. If the feed slot cover is open, paper cannot be fed.

Note

- After loading paper in the rear tray, the screen for setting rear tray paper information appears. Set paper information for the paper in the rear tray.
- To cancel printing, press the printer's **Stop** button.

1003

Cause

Possible causes include the following.

- There is no paper in the cassette.
- Paper is not loaded in the cassette properly.

What to Do

Take the corresponding actions below.

- Load paper in the cassette.
  - Loading Paper in the Cassette
- Align the paper guides with the both edges of the paper when you load paper in the cassette.

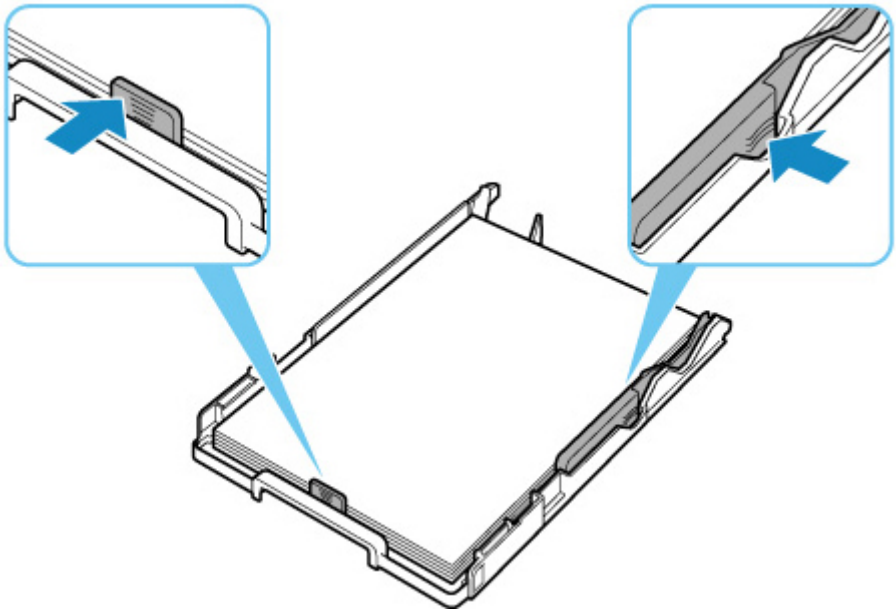

- Set paper information for the paper in the cassette.

After carrying out the above measures, press the printer's **OK** button.

Note

- Once the cassette is inserted, pull out the paper output tray until it stops. If it is not pulled out enough and you start printing, an error may occur.
- The loadable paper differs depending on the paper source. The loadable paper in the cassette is A4, Letter, A5, or B5 size plain paper.
- To cancel printing, press the printer's **Stop** button.

1013

Cause

Multi-purpose tray compatible media is not set on multi-purpose tray, or the media position is misaligned.

What to Do

Set the multi-purpose tray compatible media properly by following these steps.

1. Remove multi-purpose tray.

2. Place multi-purpose tray compatible media on multi-purpose tray properly.

   Placing Multi-purpose Tray

2. Place multi-purpose tray on multi-purpose tray guide.

3. Press the printer's **OK** button.

   The printer starts printing.

Important

- When you print on multi-purpose tray compatible media, use the supplied multi-purpose tray.

Note

- To cancel printing, press the printer's **Stop** button.

1200

Cause

Top cover is open.

What to Do

Close the top cover and wait for a while.

Do not close it while you are replacing an ink tank.

1401

Cause

Print head may be damaged.

What to Do

Turn off the printer and turn it back on.

If this does not solve the problem, contact your nearest Canon service center to request a repair.

1600

Cause

Ink may have run out.

What to Do

Replacing the ink tank is recommended.

If printing is in progress and you want to continue printing, press the printer's **OK** button with the ink tank installed. Then printing can continue. Replacing the ink tank is recommended after the printing. The printer may be damaged if printing is continued under the ink out condition.

1660

Cause

The ink tank cannot be recognized.

What to Do

Printing cannot be performed because the ink tank is not installed or is not compatible with this printer.

Check the ink tank.

If you want to cancel printing, press the printer's **Stop** button.

1688

Cause

The ink has run out.

What to Do

Replace the ink tank and close the top cover.

Printing under the current condition may damage the printer.

If you want to continue printing in this condition, you need to disable the function for detecting the remaining ink level. Press and hold the printer's **Stop** button for at least 5 seconds, and then release it.

With this operation, disabling the function for detecting the remaining ink level is memorized. Please be advised that Canon shall not be liable for any malfunction or trouble which may be caused by continuation of printing under the ink out condition.

Note

- If you disable remaining ink level detection, M (the letter under the icon represents the ink color) will be displayed on the standby screen on the printer.

1689

Cause

Printer detected ink out condition.

What to Do

Replace the ink tank and close the top cover.

An ink tank that was once empty is installed.

Printing under the ink out condition may damage the printer.

If you want to continue printing, you need to disable the function for detecting the remaining ink level. To disable this function, press and hold the printer's **Stop** button for at least 5 seconds, and then release it.

With this operation, disabling the function for detecting the remaining ink level is memorized. Please be advised that Canon shall not be liable for any malfunction or trouble caused by continuation of printing under the ink out condition or by using refilled ink tanks.

Note

- If you disable remaining ink level detection, (the letter under the icon represents the ink color) will be displayed on the standby screen on the printer.

1700

Cause

Ink absorber is almost full.

What to Do

Press the printer's **OK** button to continue printing. Contact your nearest Canon service center to request a repair.

Note

- In the case of warnings or errors caused by remaining ink levels, the printer cannot print.

1890

Cause

Tape for securing print head holder during transportation may still be attached.

What to Do

Open the top cover and make sure the tape for securing the print head holder during transportation has been removed.

If the tape is still there, remove it and close the top cover.

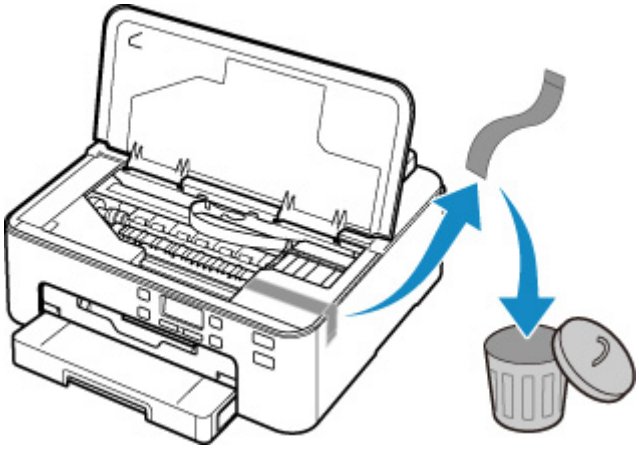

If this does not solve the problem, contact your nearest Canon service center to request a repair.

2110

Cause

Paper settings for printing do not match cassette paper information set on printer.

Note

- See below for the correct correspondence between paper settings made on the printer driver or on the LCD.
  - Paper Settings on the Printer Driver and the Printer (Media Type) (Windows)
  - Paper Settings on the Printer Driver and the Printer (Paper Size) (Windows)
- See below for details on cassette paper information set on the printer.
  - Paper Settings

If the print paper settings do not match cassette paper information set on the printer, as shown below, a message appears on the LCD.

- Print settings specified on the printer driver:

  Paper size: A5

  Media type: Plain paper
- Cassette paper information set on the printer:

  Paper size: A4

  Media type: Plain paper

```
The size or type of  2110
[OK]Select option
```

What to Do

Press the printer's **OK** button to display the screen below.

```
Select option
   Replace the paper  ▶
```

Select the appropriate action.

Note

- Depending on settings, some of the options below may not appear.

Print on set paper

Select this option to print onto the paper in the cassette without changing the paper settings.

For example, if the print paper setting is A5, and cassette paper information is set to A4, the A5 size setting is used to print onto the paper in the cassette.

Replace the paper

Select this option to print after changing the paper in the cassette.

For example, if the print paper setting is A5, and cassette paper information is set to A4, change the paper in the cassette to A5 paper and proceed with printing.

Once you have inserted the cassette after changing the paper, the screen for setting cassette paper information appears. Set paper information for the paper in the cassette.

Note

- See below for the correct correspondence between paper settings made on the printer driver or on the LCD.
  - Paper Settings on the Printer Driver and the Printer (Media Type) (Windows)
  - Paper Settings on the Printer Driver and the Printer (Paper Size) (Windows)

Cancel

Cancels printing.

Select this option when you want to change the print paper settings. Change the paper settings and retry printing.

Note

- To suppress the misprint prevention message, change the setting as described below. When you suppress the message, the printer uses the paper settings for printing onto the paper in the cassette regardless of whether or not the paper matches these settings.
  - To change the message view setting when printing using the operation panel of the printer:
    - Feed settings
  - To change the message view setting when printing using the printer driver:
    - Changing the Printer Operation Mode (Windows)
    - Changing the Printer Operation Mode (macOS)

2113

Cause

Paper settings for printing do not match either rear tray or cassette paper information set on printer.

Note

- See below for the correct correspondence between paper settings made on the printer driver or on the LCD.
  - Paper Settings on the Printer Driver and the Printer (Media Type) (Windows)
  - Paper Settings on the Printer Driver and the Printer (Paper Size) (Windows)
- See below for details on rear tray or cassette paper information set on the printer.
  - Paper Settings

If the paper source is set to automatically switch and the print paper settings do not match either rear tray or cassette paper information set on the printer, as shown below, a message appears on the LCD.

- Print settings specified on the printer driver:

  Paper size: A5

  Media type: Plain paper
- Rear tray and cassette paper information set on the printer:

  Paper size: A4

  Media type: Plain paper

```
Size or type of loa( 2113
[OK]Select option
```

What to Do

Press the printer's **OK** button to display the screen below.

```
Select option
   Replace the paper  ▸
```

Select the appropriate action.

Note

- Depending on settings, some of the options below may not appear.

Print on set paper

Select this option to print onto the paper in the rear tray and the cassette without changing the paper settings.

For example, if the print paper setting is A5, and rear tray and cassette paper information are set to A4, the A5 size setting is used to print onto the paper in the cassette.

Replace the paper

Select this option to print after changing the paper in the rear tray or the cassette.

For example, if the print paper setting is A5, and rear tray and cassette paper information are set to A4, change the paper in the rear tray or the cassette to A5 paper and proceed with printing.

Once you have changed the paper, the screen for setting rear tray or cassette paper information appears. Set paper information for the paper.

Note

- See below for the correct correspondence between paper settings made on the printer driver or on the LCD.
  - Paper Settings on the Printer Driver and the Printer (Media Type) (Windows)
  - Paper Settings on the Printer Driver and the Printer (Paper Size) (Windows)

Cancel

Cancels printing.

Select this option when you want to change the print paper settings. Change the paper settings and retry printing.

Note

- To suppress the misprint prevention message, change the setting as described below. When you suppress the message, the printer uses the paper settings for printing onto the paper in the rear tray or the cassette regardless of whether or not the paper matches these settings.
  - To change the message view setting when printing using the operation panel of the printer:
    - Feed settings
  - To change the message view setting when printing using the printer driver:
    - Changing the Printer Operation Mode (Windows)
    - Changing the Printer Operation Mode (macOS)

2114

Cause

Paper settings for printing do not match rear tray paper information set on printer.

Note

- See below for the correct correspondence between paper settings made on the printer driver or on the LCD.
  - Paper Settings on the Printer Driver and the Printer (Media Type) (Windows)
  - Paper Settings on the Printer Driver and the Printer (Paper Size) (Windows)
- See below for details on rear tray paper information set on the printer.
  - Paper Settings

If the print paper settings do not match rear tray paper information set on the printer, as shown below, a message appears on the LCD.

- Print settings specified on the printer driver:

  Paper size: A5

  Media type: Plain paper
- Rear tray paper information set on the printer:

  Paper size: A4

  Media type: Plain paper

```
The size or type of  2114
[OK]Select option
```

What to Do

Press the printer's **OK** button to display the screen below.

```
Select option
   Replace the paper  ▸
```

Select the appropriate action.

Note

- Depending on settings, some of the options below may not appear.

Print on set paper

Select this option to print onto the paper in the rear tray without changing the paper settings.

For example, if the print paper setting is A5, and rear tray paper information is set to A4, the A5 size setting is used to print onto the paper in the rear tray.

Replace the paper

Select this option to print after changing the paper in the rear tray.

For example, if the print paper setting is A5, and rear tray paper information is set to A4, change the paper in the rear tray to A5 paper and proceed with printing.

Once you have changed the paper, the screen for setting rear tray paper information appears. Set paper information for the paper in the rear tray.

Note

- See below for the correct correspondence between paper settings made on the printer driver or on the LCD.
  - Paper Settings on the Printer Driver and the Printer (Media Type) (Windows)
  - Paper Settings on the Printer Driver and the Printer (Paper Size) (Windows)

Cancel

Cancels printing.

Select this option when you want to change the print paper settings. Change the paper settings and retry printing.

Note

- To suppress the misprint prevention message, change the setting as described below. When you suppress the message, the printer uses the paper settings for printing onto the paper in the rear tray regardless of whether or not the paper matches these settings.
  - To change the message view setting when printing using the operation panel of the printer:
    - Feed settings
  - To change the message view setting when printing using the printer driver:
    - Changing the Printer Operation Mode (Windows)
    - Changing the Printer Operation Mode (macOS)

4103

Cause

Cannot perform printing with current print settings.

What to Do

Press the printer's **Stop** button to cancel printing.

Then change the print settings and retry printing.

5100

Cause

Printer error has occurred.

What to Do

Cancel printing and turn off the printer.

Check the following:

- Make sure print head holder motion is not impeded by tapes for securing the print head holder during transportation, jammed paper, etc.

  Remove any impediment.

- Make sure the ink tanks are properly installed.

  Press ink tanks until they click into place.

Turn the printer back on.

If this does not solve the problem, contact your nearest Canon service center to request a repair.

Important

- When clearing an impediment to print head holder motion, be careful not to touch white belt (A).

  If you soil or scratch this part by touching it with paper or your hand, it could damage the printer.

5200

Cause

Printer error has occurred.

What to Do

Turn off printer and unplug it.

After a while, plug in the printer again and turn it back on.

If this does not solve the problem, contact your nearest Canon service center to request a repair.

5B00

Cause

Printer error has occurred.

What to Do

Contact your nearest Canon service center to request a repair.

Note

- In the case of warnings or errors caused by remaining ink levels, the printer cannot print.

6000

Cause

Printer error has occurred.

What to Do

If the paper is jammed, remove it depending on the jammed location and cause.

List of Support Code for Error (Paper Jams)

Turn off printer and unplug it.

Plug in the printer again and turn it back on.

If this does not solve the problem, contact your nearest Canon service center to request a repair.

C000

Cause

Printer error has occurred.

What to Do

Turn off printer and unplug it.

Plug in the printer again and turn it back on.

If this does not solve the problem, contact your nearest Canon service center to request a repair.