CEILING FAN

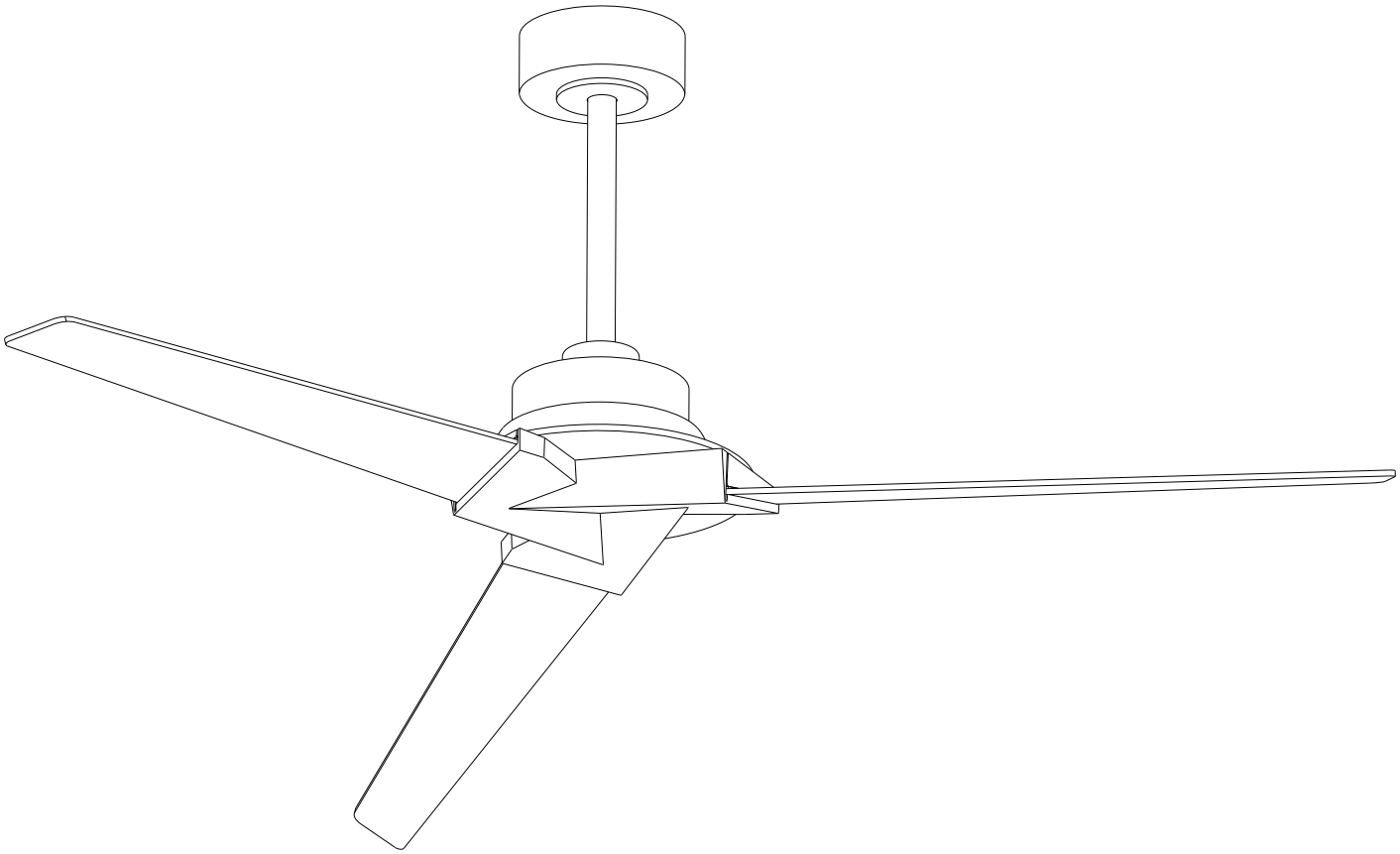

USE AND CARE GUIDE

CEILING FAN

F6047
Installation
Operating Instructions for the

WARNING: SHUT POWER OFF AT FUSE OR CIRCUIT BREAKER

Safety Information

1. To reduce the risk of electric shock,the electricity has been turned off at the circuit breaker or fuse box before begin.
2. WARNING: TO REDUCE THE RISK OF FIRE, ELECTRIC SHOCK, OR INJURY TO PERSONS, OBSERVE THE FOLLOWING:

a) Use this unit only in the manner intended by the manufacturer. If you have question, contact the manufacturer.
b) Before servicing or cleaning unit, switch power off at service panel and lock the service disconnecting means to prevent power from being switched on accidentally. When the service disconnecting means cannot be locked,securely fasten a prominent warning device, such as a tag, to the service panel.

3. The outlet box and support structure must be securely mounted and capable of reliably supporting 35lb.(15.9kg). Use only UL listed outlet boxes marked “Acceptable for Fan Support of 35lbs(15.9kg) or less.”

• A diagram showing the fan, intended mounting means, and ceiling outlet box with fan canopy covering the outlet box.
• A statement that the installation is to be in accordance with the National Electrical Code, ANSI/NFPA 70 and local codes;
• A warning to make sure power is off before attempting installation.
• After making the wire connections, the wires should be spread apart with the grounded conductor and the equipment-grounding conductor on one side of the outlet box and the ungrounded conductor on the other side of the outlet box.
• The splices after being made should be turned upward and pushed carefully up into the outlet box.
• Instruction for supply connections: conductor of a fan identified as grounded conductor to be connected to a grounded conductor of power supply, conductor of fan identified as ungrounded conductor to be connected to an ungrounded conductor of power supply, conductor of fan identified for equipment grounding to be connected to an equipment-grounding conductor.
• All instruction sheets shall indicate fan model designation or model series.

4. The fan must be mounted with a minimum of 7ft(2.1m) clearance from the trailing edge of the blades to the floor.
5. Before operating the reversing button, you must turn the fan on and make sure the fan blades are in motion.

• When the fan is in reversing mode, press the “reverse” button to reverse the blade direction to normal rotation.
• If the fan blades are in motion but no wind comes out, press the “reverse” button once.

6. To avoid personal injury or damage to the fan and other items, use caution when working around or cleaning thefan.
7. The instructions for ceiling fans shall include the substance of the following:

• the maintenance cycle and method of maintenance.
• the weight of the appliance in kilograms or Lbs.
• that the replacement of parts of the safety suspension system device shall be performed by the manufacturer, its service agent or suitably qualified persons.
• that the mounting of the suspension system shall be performed by the manufacturer, its service agent or suitably qualified persons.
• the model or type reference of a luminaire that may be installed in a fan constructed for this purpose.

8. This device complies with part 15 of the FCC Rules. 0peration is subject to the following two conditions: (1) This device may not cause harmful interference, and (2)this device must accept any interference received, including interference that may cause undesired operation.

WARNING: To Reduce The Risk of Personal Injury, Do Not Bend The Blade Brackets When Installing The Brackets,Balancing The Blades, Or Cleaning The Fan. Do Not Insert Foreign Objects In Between Rotating Fan Blades.

WARNING: To Reduce The Risk of Fire or Electric Shock,Do Not Use This Fan With Any Solid-State Speed Control Device.

WARNING: To avoid possible electrical shock, turn the electricity off at the main fuse box before wiring. Electrical installation should be performed by a qualified licensed electrician.

WARNING: To Reduce The Risk Of Fire,Electric Shock Or Personal Injury, Mount To Outlet Box Marked “Acceptable for Fan Support of 35 lbs. (15.9 kg) or less," And Use Mounting Screws Provided With the Outlet Box.

WARNING: Electrical diagrams are for reference only.Optional use of any light kit shall be cUL-listed and marked suitable for use with this fan.

WARNING: To REDUCE THE RISK OF FIRE, ELECTRIC SHOCK, this fan must be installed with an isolating wall switch.

WARNING: If Unusual Oscillating Movement is observed, Immediately Stop Using The Ceiling Fan And Contact The Manufacturer, Its Service Agent Or Suitably Qualified Persons.

TECHNICAL INFORMATION

SKU	Nominal voltagre	Nominal output(motor)	Light
F6047	120VAC	40W	24W

CEILING FAN

F6047

Installation
Operating Instructions for the

WARNING: SHUT POWER OFF AT FUSE OR CIRCUIT BREAKER

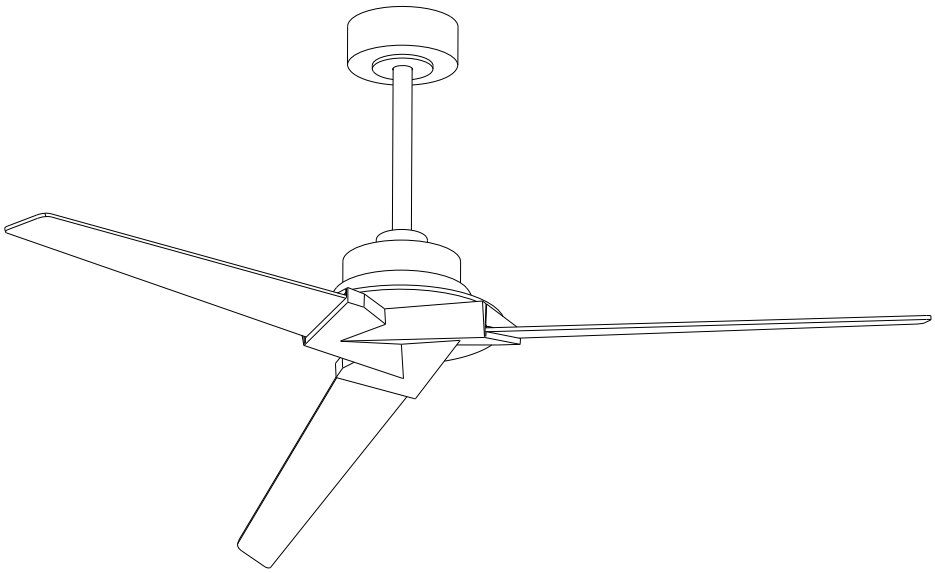

THANK YOU FOR YOUR PURCHASE

Thank you for purchasing this quality product. To ensure correct function and safety, please read and save all instructions before using the product

SAFETY TIP

1. To avoid possible electric shock, turn off the electricity at the main fuse box or circuit panel before you begin the fan installation or before servicing the fan or installing accessories.
2. Read all instructions and safety information carefully before installing your fan and save these instructions.
3. Make sure all electrical connections comply with local codes or ordinances and the National Electrical Code. If you are unfamiliar with electric wiring, please use a qualified and licensed electrician.
4. Make sure you have a location selected for your fan that allow clear space for the blades to rotate, and at least 7ft(2.1m) of clearance between the floor and the fan blade tips. The fan should be mounted at least 1.2m from walls or other upright structures.
5. WARNING: The outlet box and ceiling support joist used must be securely mounted, and capable of supporting at least 100 pounds. To reduce the risk of fire, electric shock or personal injury, mount to the outlet box marked acceptable for fan supported and use mounting screws provided with the outlet box. The box must be supported directly by the building structure.
6. WARNING: To reduce the risk of fire, electric shock or personal injury, mount to outlet box marked "acceptable for fan fixtures are not acceptable for fan support and may need to be replaced. Consult a qualifed electrician if in doubt.
7. Electrical diagrams are for reference only. Light kits that are not packed with the fan must UL listed and marked suitable for use with the model fan you are installing. Switches must be UL. general use switches. Refer to the instructions packaged with the light kits and switches for proper assembly.
8. After installation is complete, check that all connections are absolutely secure.
9. After making electrical connections, spliced conductors should be turned upward and pushed carefully up into outlet box. The wiresshould be spread apart with the grounded conductor and the equipment-grounding conductor on one side of the outlet box.
10. WARNING: To reduce the risk of electrical shock and fire, do not use this fan with any solid-state fan speed control device.
11. Do not separate the reverse switch until the fan has come to a complete stop.
12. Do not insert anything into the fan blades while they are rotating.
13. WARNING: To reduce the risk of personal injury, do not bend the blade brackets (also referred to as "flanges") during assembly or after installation. Do not insert objects in the path of the blades.
14. To avoid personal injury or damage to the fan and other items, be cautious when working around or cleaning the fan.
15. Do not use water or detergent when cleaning the fan or fan blades. A dry dust cloth or lightly dampened cloth will be suitable for most cleaning.

NOTE: The important safety precautions and instructions appearing in the manual are not meant to cover all possible conditions and situations that may occur. It must be understood that common sense and caution are necessary factors in the Installation and operation of this fan.

NOTE: This product is not intended for use by persons (including children) with reduced physical, sensory or mental capabilities are different or are impaired, or lack of experience or knowledge, unless such persons are supervised or trained to operate the appliance by a person responsible for their safety.

CEILING FAN

F6047
Installation
Operating Instructions for the

WARNING: SHUT POWER OFF AT FUSE OR CIRCUIT BREAKER

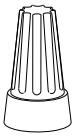
AA

Plastic wire nut(3)

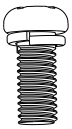
BB

Blade attachment screw（12）

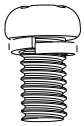
CC

Motor attachment screw with lock washer(6)


EE

Plastic shade screw（9）

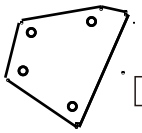
KK

Blade gasket(3)

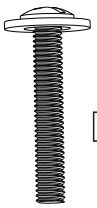
HH

J-box attachment screw -with serrated washer(2)

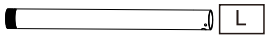
L

19. 6″ **downrod**（1）

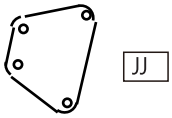
JJ

Blade support plate(3)

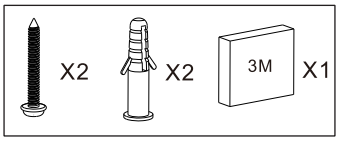

Remote control screw kit

NOTE:Hardware not shown to actual size.

Driver(1)

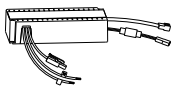

Mounting bracket (**1**)

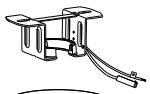

Canopy (**1**)

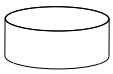

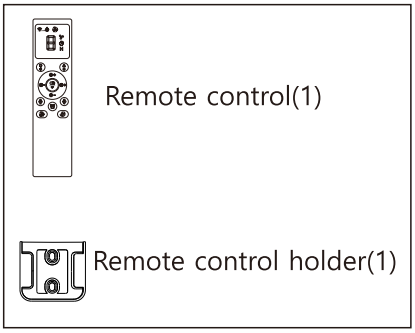

Canopy bottom cover with magnetic particle(1)

12" threaded downrod(1)

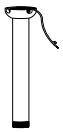



19.6" threaded downrod(1)

Coupling bottom cover assembly(1)



Fan motor assembly with light kit(1)

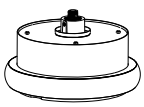

Blade board(1)

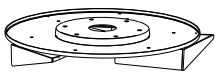

Blade(**3**)

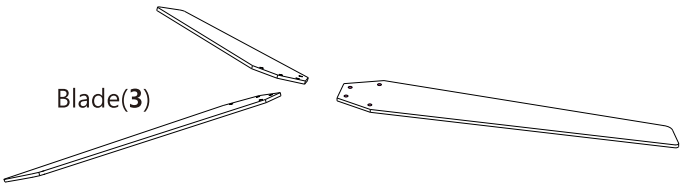

Blade support plate(3)

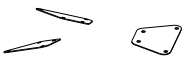

Plastic shade(1)

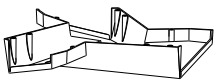

PIs check whether above accessories are completed or not?Yes,and install.

CEILING FAN

F6047
Installation
Operating Instructions for the

WARNING: SHUT POWER OFF AT FUSE OR CIRCUIT BREAKER

1 Assembling the fan

WARNING: To reduce the risk of personal injury, do not bend the blades while installing, balancing the blades, or cleaning the fan.

WARNING: Do not insert foreign objects between rotating fan blades.

WARNING: Do not use automatic screwdriver to tighten the fan blades.

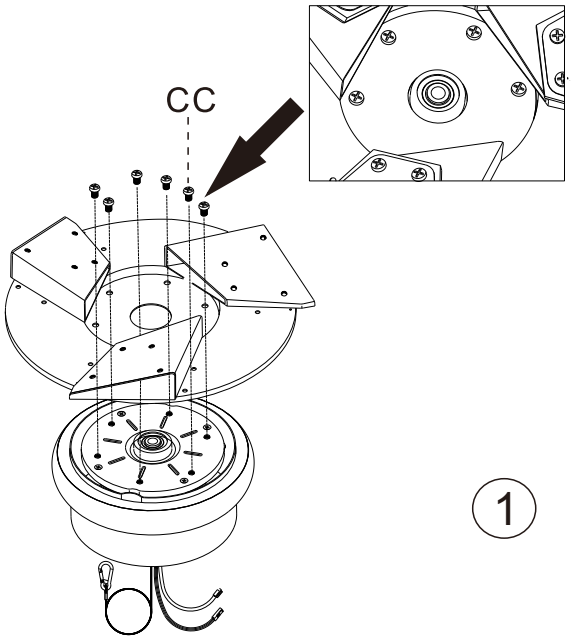

1

2

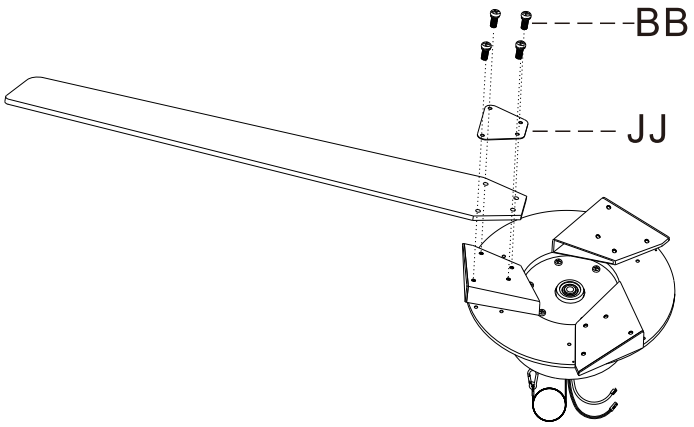

3

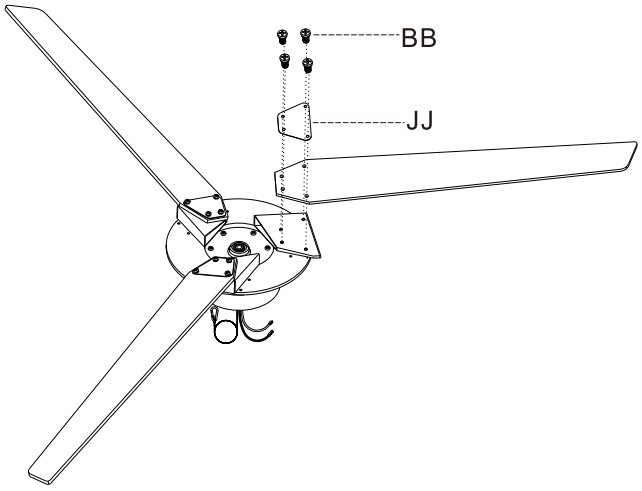

4

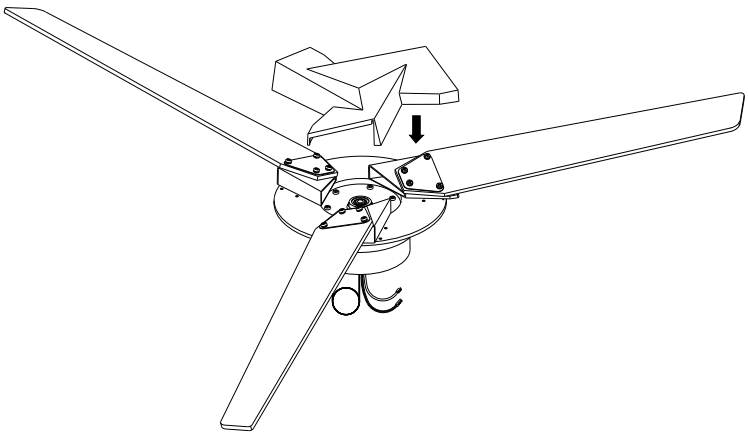

5

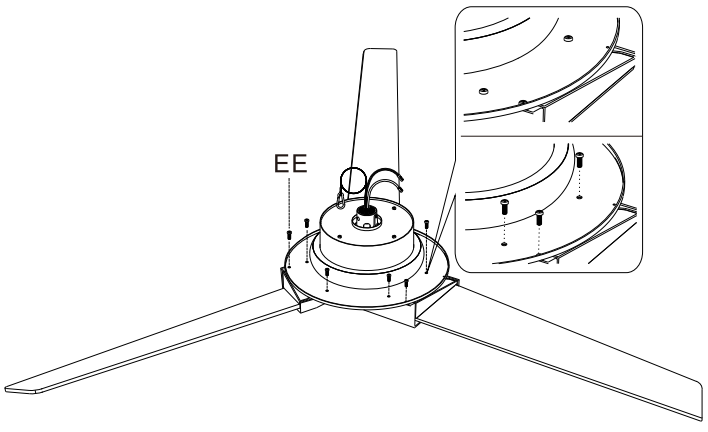

CEILING FAN

F6047
Installation
Operating Instructions for the

WARNING: SHUT POWER OFF AT FUSE OR CIRCUIT BREAKER

⑥ Downrod assembling

Note:This ceiling fan is supplied with two downrods. Once you have decided which downrod you will use, refer to the corresponding sections and procedures during the assembly period.

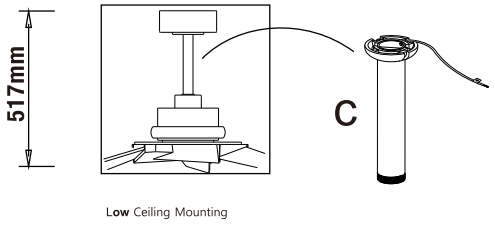

Low Ceiling Mounting

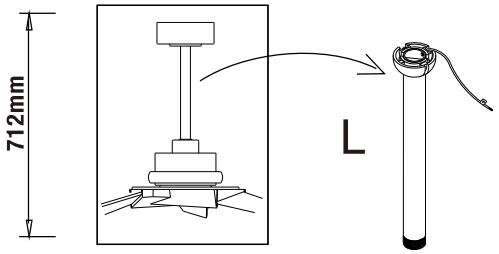

Long downrod Ceiling Mounting

(1) The 12" downrod (C) is for "close-to and flat ceilings" installation, less than 8 feet ceilings.

(2) The 19.6" downrod (L) is for higher ceilings.

WARNING: Failure to properly tighten the setscrews could result in the fan becoming loose and possibly falling.

NOTE: Choose 12" or 19.6" threaded downrod according to your ceiling.The hanger ball is assembled on 12" downrod.

★ Once you decide to use 19.6" threaded downrod, remove the hanger ball from 12" threaded downrod by loosening the setscrews and removing the metal pin as shown. Reassembly the hanger ball on 19.6" threaded downrod in the opposite way. Tighten the setscrews against the downrod firmly. Keep parts.

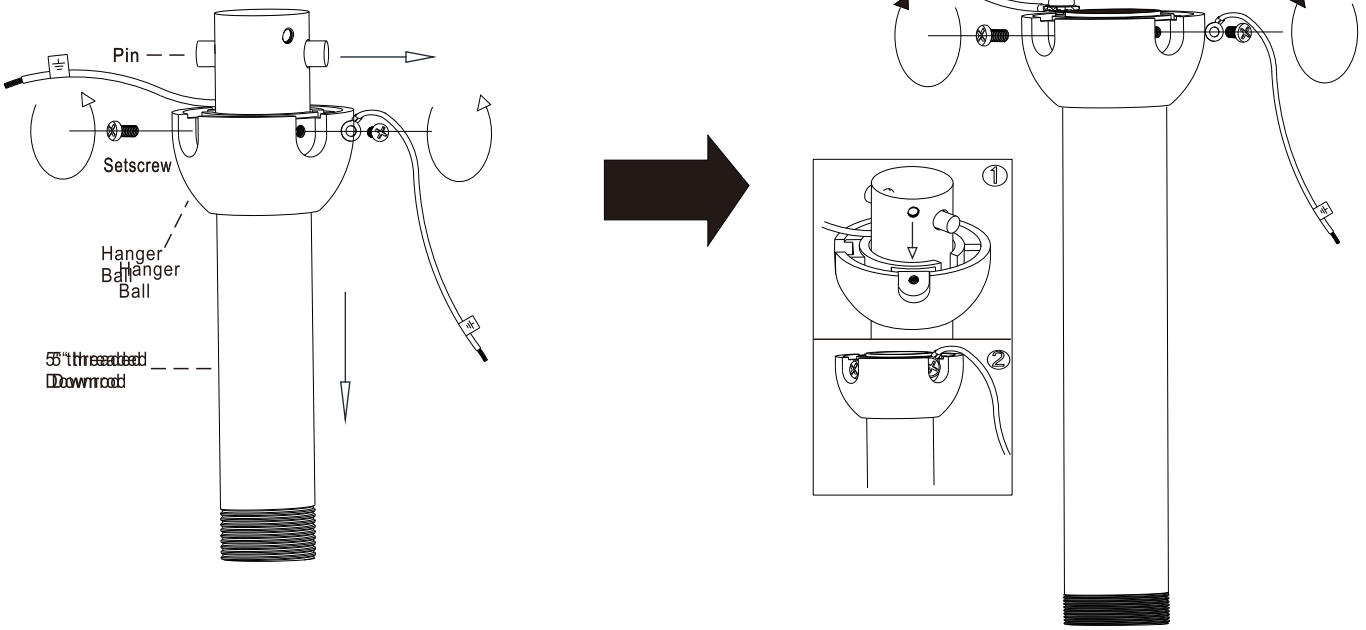

CEILING FAN

F6047

Installation

Operating Instructions for the

WARNING: SHUT POWER OFF AT FUSE OR CIRCUIT BREAKER

7

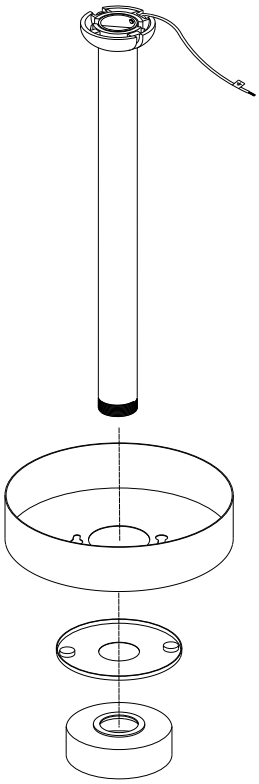

8

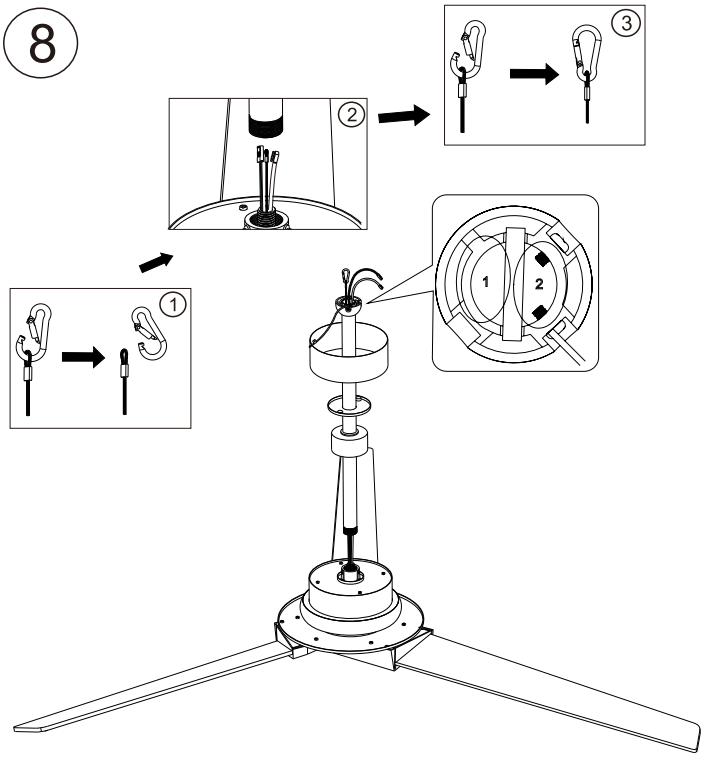

★ Route the wires and safety rope from 1 or 2

9

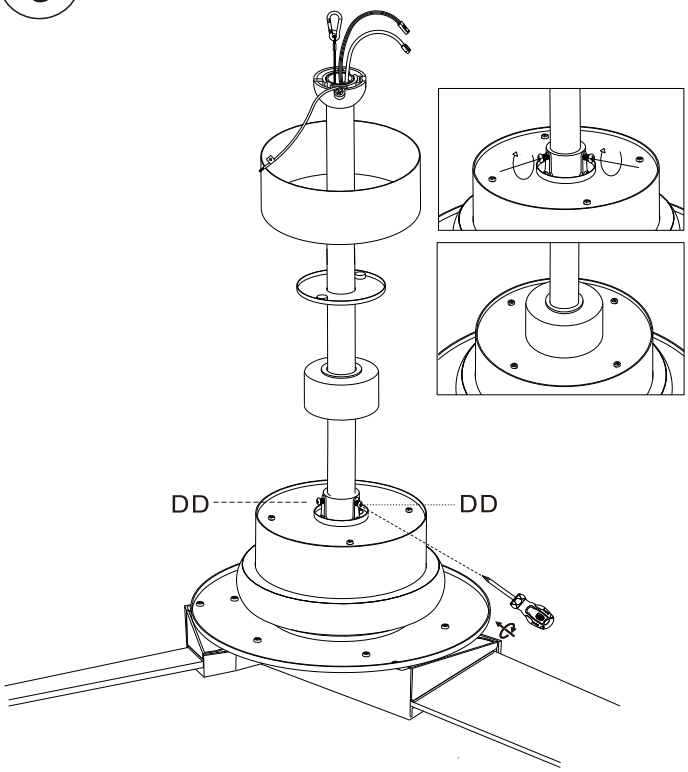

10

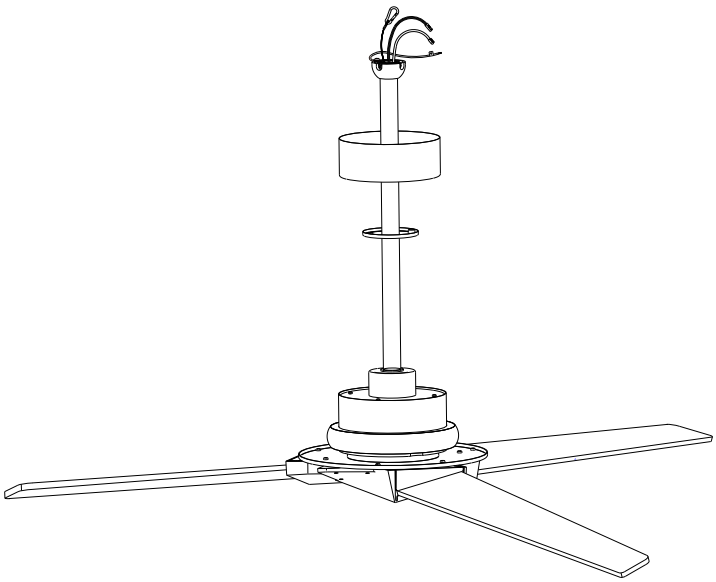

CEILING FAN

F6047

Installation
Operating Instructions for the

WARNING: SHUT POWER OFF AT FUSE OR CIRCUIT BREAKER

2 Attaching the fan to the electrical box

WARNING: To Reduce The Risk Of Fire, Electric Shock Or Personal Injury, Mount To an Outlet Box Marked "Acceptable for Fan Support of 35 lbs.(15.9 kg) or less," And Use Mounting Screws Provided With the Outlet Box.

NOTE: The mounting bracket is designed to place on an outlet box with the outlet box screws with serrated washer(HH).

1

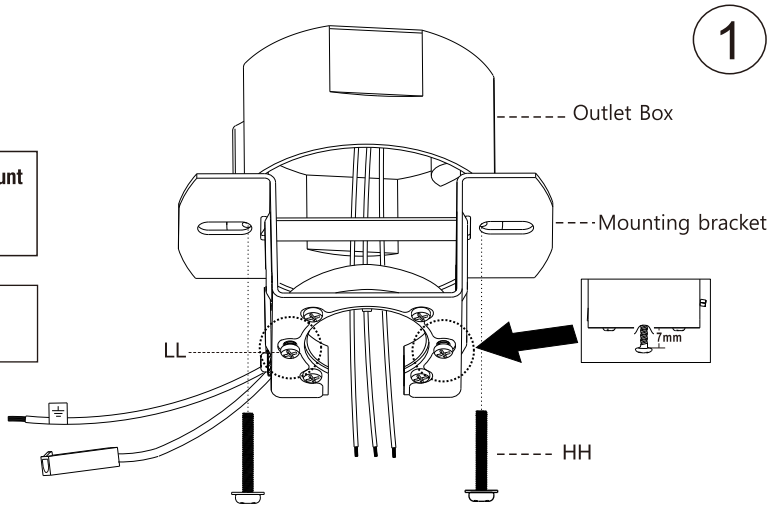

✶ Lossen LL and leave about 7mm distance

2

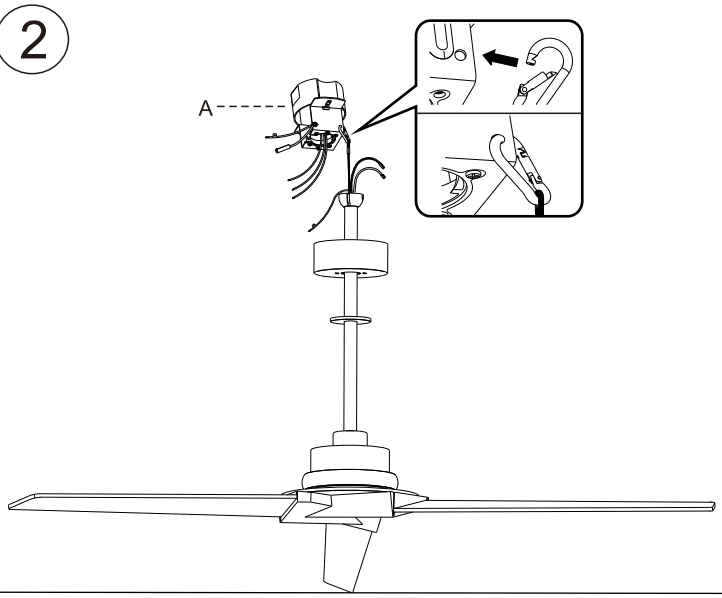

3

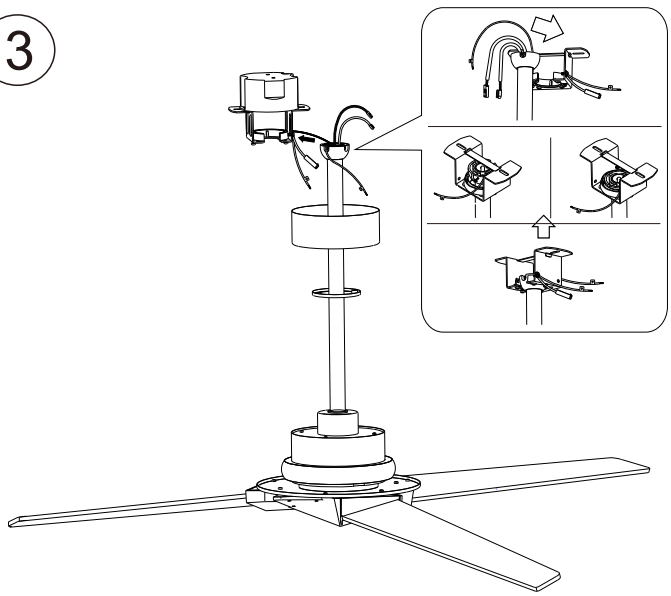

4

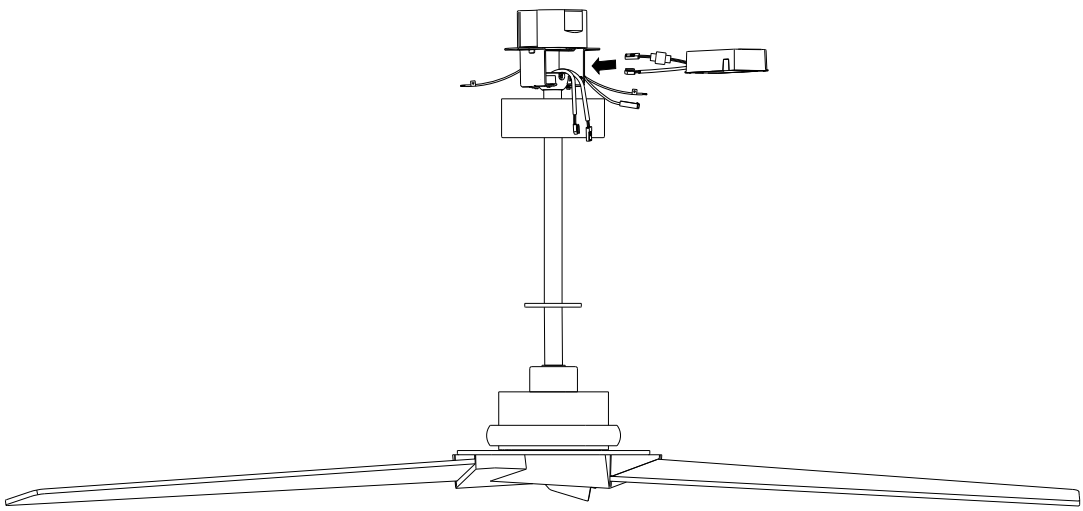

✶ Carefully insert the LED driver into the mounting bracket in the direction of the arrow.

CEILING FAN

F6047

Installation

Operating Instructions for the

WARNING: SHUT POWER OFF AT FUSE OR CIRCUIT BREAKER

3 Making the electrical connection

WARNING: To avoid possible electrical shock ,turn the electricity off at the main fuse box before wiring. If you fell you do not have enough electrical wiring knowledge or experience, contact a licensed electrician.

WARNING: Check to see that all connections are tight,including ground, and that no bare wire is visible at the wire nuts, except for the ground wire.

CAUTION: Do not use with a wall light dimmer switch. Do not use with any Solid-State fans.

NOTE: The fan must be installed at a maximum distance of 8 meters from the remote control for proper signal transmission between the remote control and the fan's receiving unit.

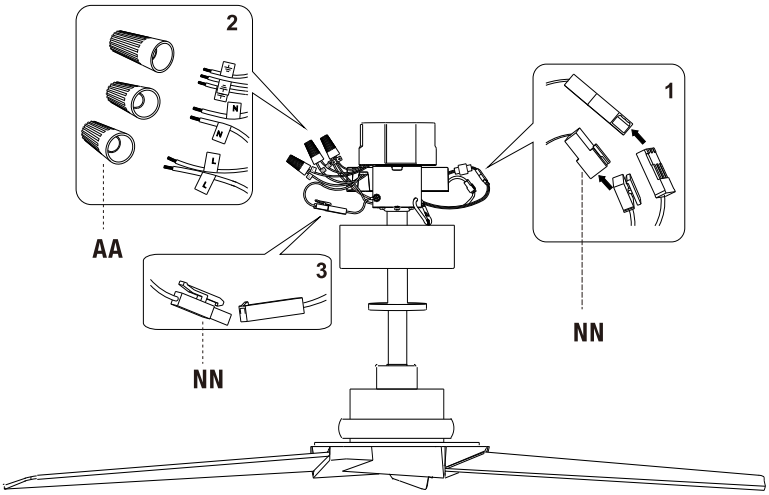

1 Connect the fan to the LED driver as follows, using the wire connection(NN)

From Fan	To LED Driver
White/Black/Red Wire	White/Black/Red Wire "For Light"
Yellow/Grey/White Wire	Yellow/Grey/White Wire "To Motor"

2 Connect the LED Driver to the outlet box as follows, using the plastic wire nuts (AA).

From LED Driver	To Outlet Box
Black Wire "AC in L"	Black Wire (Hot)
White Wire "AC in N"	White Wire (Neutral)

Connect the downroad green wire and the LED driver green wire to the outlet box ground wire(this may be a green or bare wire) using a plastic wire nut (AA).

3 Connect the LED Driver green wire to the Mounting Bracket green wire, using the wire connection plugs(NN).

* There are two green grounding leads from the mounting bracket (A).

4 Secure the plastic wire nuts (AA) with electrical tape(NOT INCLUDED).Make sure there are no loose strands or connections. Carefully tuck the connections up into the outlet box.

CEILING FAN

F6047

Installation
Operating Instructions for the

WARNING: SHUT POWER OFF AT FUSE OR CIRCUIT BREAKER

1

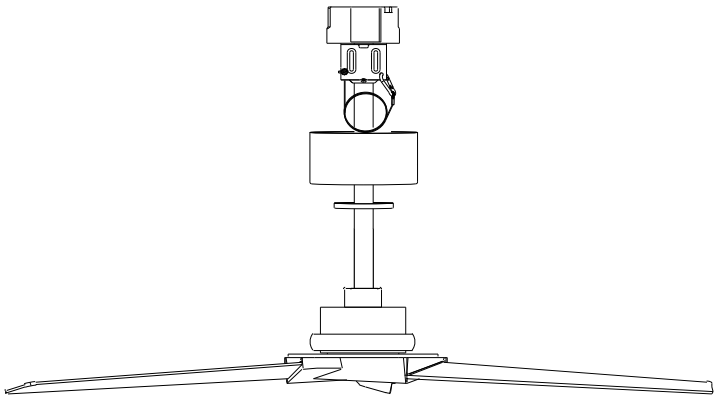

2

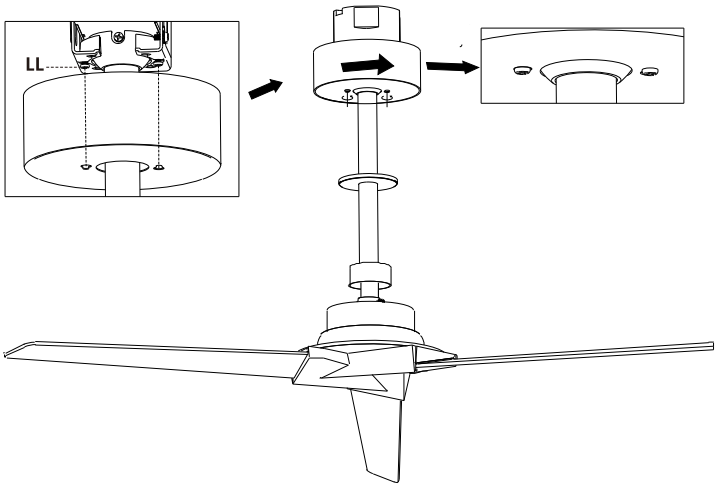

3

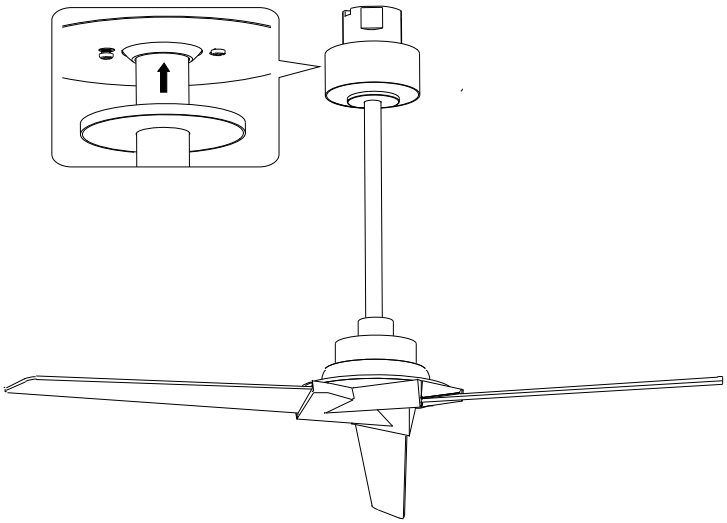

4

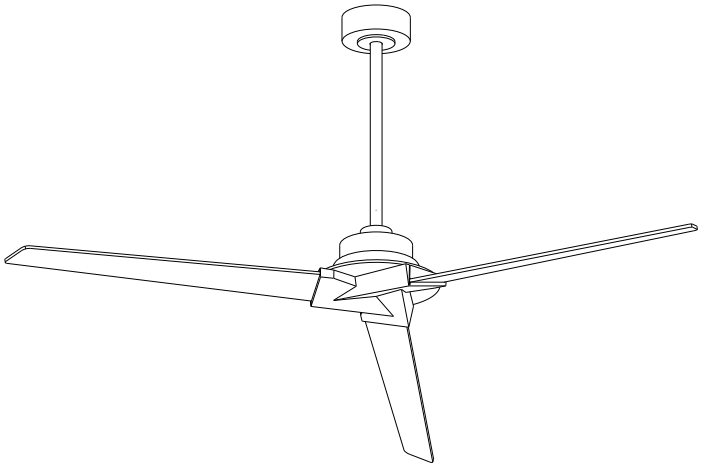

CEILING FAN

F6047
Installation
Operating Instructions for the

WARNING: SHUT POWER OFF AT FUSE OR CIRCUIT BREAKER

Note: 1. The remote control included with the lamp is already connected and ready to use once 2pcs AAA batteries(NOT INCLUDED) are installed.

2.The fan must be installed at a maximum distance of 8 meters from the remote control for proper signal transmission between the remote control and the fan.

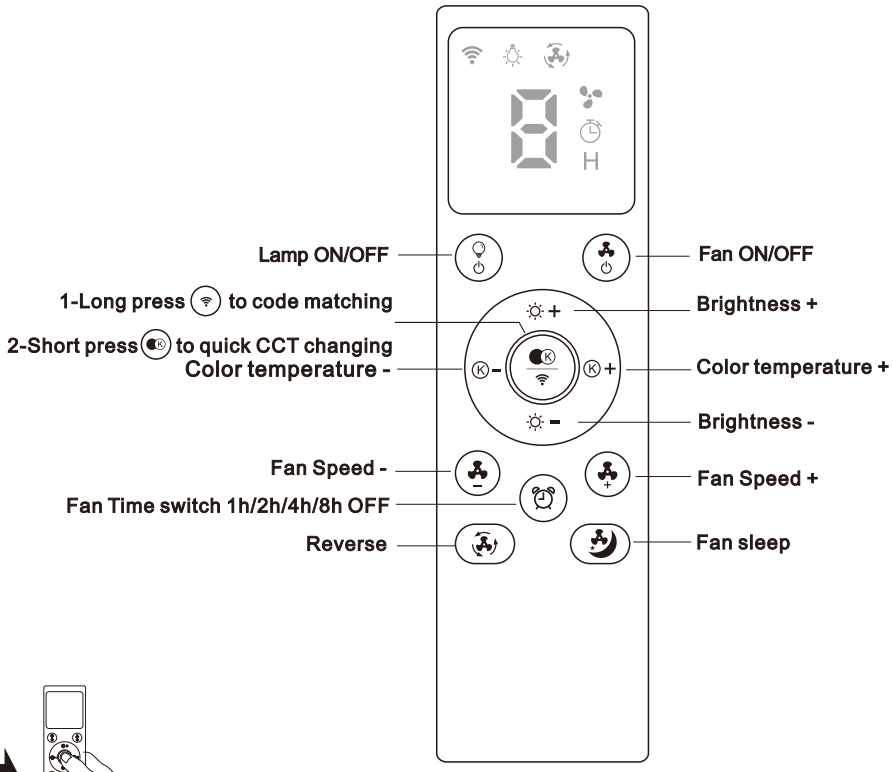

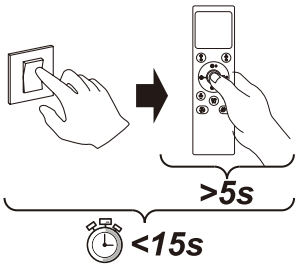

Press and hold for 5 seconds within 10 seconds after powering on to match the remote control. When the brightness of the light changes, it indicates that the matching is successful.

Reverse Switch Operation

Before operating the reversing button, you must turn the fan on.

• When the fan is in reversing mode, press the "Fan ON/OFF" to stop the fan motion, then press the "Fan ON/OFF" button again to reverse the blade direction to normal rotation.

Warm weather(Foward)- A downward airflow creates a cooling effect. This allows you to set your air conditioner on a warmer setting without affecting your comfort.

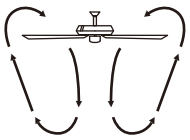

Cool weather(Reverse)-An upward airflow moves warm air off the ceiling.This allows you to set your heating unit on a cooler setting without affecting your comfort.

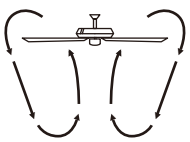

Note: Speed settings for warm or cool weather depend on factors such as the room size, ceiling height, number of fans and so on.

CEILING FAN

F6047
Installation
Operating Instructions for the

WARNING: SHUT POWER OFF AT FUSE OR CIRCUIT BREAKER

FCC Statement:

1. This device complies with Part 15 of the FCC Rules.Operation is subject to the following two conditions:
（1) This device may not cause harmful interference.
（2)This device must accept any interference received, including interference that may cause undesired operation.

2.Changes or modifications not expressly approved by the party responsible for compliance could void the user's authority to operate the equipment.

NOTE: This equipment has been tested and found to comply with the limits for a Class B digital, pursuant to Part 15 or the FCC Rules. These limits are designed to provide reasonable protection against harmful interference in a residential installation. This equipment generates, uses and can radiate radio frequency energy and, if not installed and used in accordance with the instructions, may cause harmful interference to radio communications.

However, there is no guarantee that interference will not occur in a particular installation. If the equipment does cause harmful interference to radio or television reception, which can be determined by turning the equipment off and on, the user is encouraged to try to correct the interference by one or more of the following measures:

--- Reorient or relocate the receiving antenna.
--- Increase the separation between the equipment and receiver.
--- Connect the equipment into an outlet on a circuit different from that to which the receiver is connected.
--- Consult the dealer or an experienced radio/ TV technician for help

CEILING FAN

F6047

Installation
Operating Instructions for the

WARNING: SHUT POWER OFF AT FUSE OR CIRCUIT BREAKER

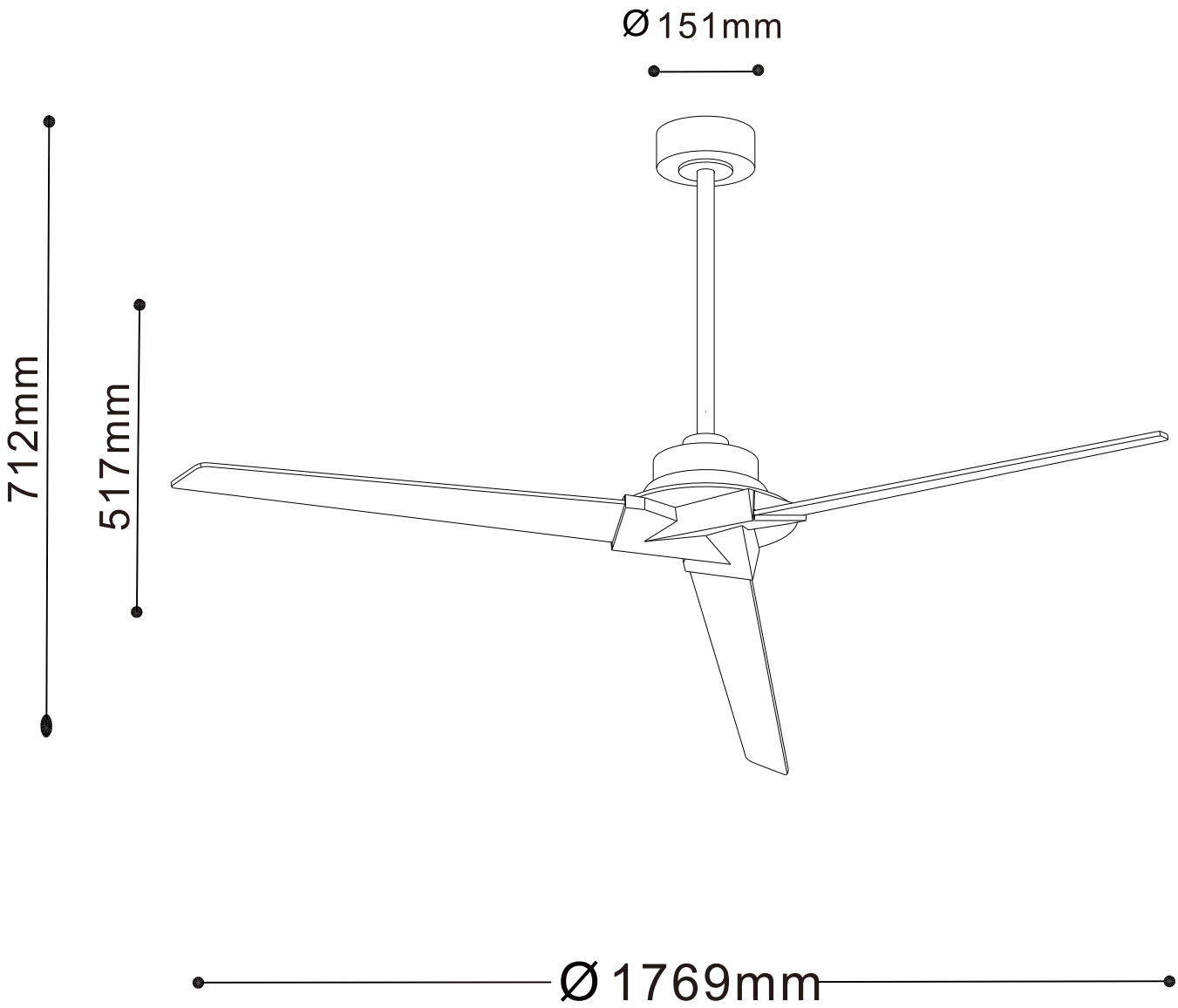

CEILING FAN

F6047
Installation
Operating Instructions for the
WARNING: SHUT POWER OFF AT FUSE OR CIRCUIT BREAKER

TROUBLESHOOTING GUIDE

Table of Contents

1.Fan / Remote is not working
2.Fan is noisy
3.Fan Wobbles

Please refer to the instruction sheet for detailed directions and descriptions of installation steps and requirements.

WARNING: Make sure the power is off at the electrical panel box before you attempt any repairs.

1. FAN / REMOTE IS NOT WORKING

Ensure the remote is within the 8 meters of the fan
Do not connect the fan with wall mounted variable speed control(s).
Check batteries to insure they are good and oriented correctly.
Repair the remote and fan according to the Remote Control Instruction.
Check the main and branch circuit fuses or breakers.
Check the line wire connections to the fan and the switch wire connections in the switch housing per the instructions.
If fan still does not work,please contact Customer Service Support@ Parrotuncle.com

2. THE FAN IS NOISY

Make sure all motor housing screws are snug.
Make sure the screws that attach the fan blade to motor are tight.
Make sure the wire nut connections are not rattling against each other or the interior wall of the switch housing.
Allow a 24-hour “breaking-in” period. Most noises associated with a new fan disappear during this time
Make sure there is a short distance from the ceiling to the top of the canopy. The canopy should not touch the ceiling!
Make sure your ceiling box is secure and that rubber isolator pads are used between the mounting bracket and outlet box.

CEILING FAN

F6047
Installation
Operating Instructions for the

WARNING: SHUT POWER OFF AT FUSE OR CIRCUIT BREAKER

3.THE FAN WOBBLES

Verify that all blades and blade bracket screws are secure(most fan wobble problems are caused by loose parts). Once the fan is properly installed, run the ceiling fan for 10 minutes to let the fan self-adust.
If the fan continues to wobble, please contact Customer Service Support @ Parrotuncle.com.

CEILING FAN

F6047
Installation
Operating Instructions for the

WARNING: SHUT POWER OFF AT FUSE OR CIRCUIT BREAKER

AFTER INSTALLATION

WOBBLE: The fan blades have been adjusted in the factory to minimize any wobble.

NOTE: CEILING FANS TEND TO MOVE DURING OPERATION DUE TO THE FACT THAT THEY ARE MOUNTED ON A RUBBER CROMMET. IF THE FAN WAS MOUNTED RIGIDLY TO THE CEILING, IT WOULD CAUSE EXCESS VIBRATION. MOVEMENT OF A FEW CENTIMENTERS IS QUITE ACCEPTABLE AND DOES NOT SUGGEST ANY PROBLEM.
TO REDUCE THE FAN WOBBLE: PLEASE CHECK THAT ALL SCREWS WHICH SECURED THE MOUNTING BRACKET AND DOWNROD ARE SECURE

WARNING: TO REDUCE THE RISK OF PERSONAL INJURY, DO NOT BEND THE BLADE ARM WHILE INSTALLING OR CLEANING THE FAN. DO NOT INSERT FOREIGN OBJECTS BETWEEN ROTATING FAN BLADES.

NOISE:
When it is quiet(especially at night), you may hear occasional small noises. This is normal. Please allow a 24-hour “break-in” period, most noises associated with a new fan disappear during the time.

Care and Cleaning

WARNING: Make sure the power is off at the electrical panel box before you attempt any cleaning or repairs.

Do	Do not
□ Check the support connections, brackets, and blade attachments twice a year. Make sure they are secure. Because of the fan's natural movement, some connections may become loose over time. It is not necessary to remove the fan from the ceiling. □ Clean your fan periodically. Use only a soft brush or lint-free cloth to avoid scratching the finish.	□ Use water when cleaning.Water could damage the motor, or the wood, or possibly cause an electrical shock. □ Apply oil to your fan or motor. The motor has permanently-lubricated sealed ball bearings.